TABLE 6.3.1-3 (Cont-13/50)
STEEL BASKET MODEL FOR
KENO GENERALIZED GEOMETRY

```
  12.25869,  12.40601,  12.57111,  12.81749,  46.83125
BLOK1 YENDS   5.08000,   5.08100,   5.55752,   5.82295,  11.95705,
  12.22248,  12.70000,  46.83125
BLOK1 ZENDS -13.85100,  13.85100
BLOCK     1    7    1
MEDIA           2,    3,    5,    6,    4
SURFACES        1,    2,    3,    4
SECTOR -1  0  0  0
SECTOR  1 -1  0  0
SECTOR  0  1 -1  0
SECTOR  0  0  1 -1
SECTOR  0  0  0  1
BLOCK     2    7    1
MEDIA           2,    3,    5,    6,    4
SURFACES        1,    2,    3,    4
SECTOR -1  0  0  0
SECTOR  1 -1  0  0
SECTOR  0  1 -1  0
SECTOR  0  0  1 -1
SECTOR  0  0  0  1
BLOCK     3    7    1
MEDIA           2,    3,    5,    6,    4
SURFACES        1,    2,    3,    4
SECTOR -1  0  0  0
SECTOR  1 -1  0  0
SECTOR  0  1 -1  0
SECTOR  0  0  1 -1
SECTOR  0  0  0  1
BLOCK     4    7    1
MEDIA           2,    3,    5,    6,    4
SURFACES        1,    2,    3,    4
SECTOR -1  0  0  0
SECTOR  1 -1  0  0
SECTOR  0  1 -1  0
SECTOR  0  0  1 -1
SECTOR  0  0  0  1
BLOCK     5    7    1
MEDIA           2,    3,    5,    6,    4
SURFACES        1,    2,    3,    4
SECTOR -1  0  0  0
SECTOR  1 -1  0  0
SECTOR  0  1 -1  0
SECTOR  0  0  1 -1
SECTOR  0  0  0  1
BLOCK     6    7    1
MEDIA           2,    3,    5,    6,    4
SURFACES        1,    2,    3,    4
SECTOR -1  0  0  0
SECTOR  1 -1  0  0
SECTOR  0  1 -1  0
SECTOR  0  0  1 -1
SECTOR  0  0  0  1
BLOCK     7    7    1
MEDIA           2,    3,    5,    6,    4
SURFACES        1,    2,    3,    4
SECTOR -1  0  0  0
```

TABLE 6.3.1-3 (Cont-14/50)
STEEL BASKET MODEL FOR
KENO GENERALIZED GEOMETRY

```
SECTOR  1 -1  0  0
SECTOR  0  1 -1  0
SECTOR  0  0  1 -1
SECTOR  0  0  0  1
BLOCK     8    7    1
MEDIA            2,   3,   5,   6,   4
SURFACES         1,   2,   3,   4
SECTOR -1  0  0  0
SECTOR  1 -1  0  0
SECTOR  0  1 -1  0
SECTOR  0  0  1 -1
SECTOR  0  0  0  1
BLOCK     9    7    1
MEDIA            2,   3,   5,   6,   4
SURFACES         1,   2,   3,   4
SECTOR -1  0  0  0
SECTOR  1 -1  0  0
SECTOR  0  1 -1  0
SECTOR  0  0  1 -1
SECTOR  0  0  0  1
BLOCK     9    6    1
MEDIA            2,   3,   5,   6,   4
SURFACES         1,   2,   3,   4
SECTOR -1  0  0  0
SECTOR  1 -1  0  0
SECTOR  0  1 -1  0
SECTOR  0  0  1 -1
SECTOR  0  0  0  1
BLOCK     8    6    1
MEDIA            7
BLOCK     7    6    1
MEDIA            7
BLOCK     6    6    1
MEDIA            7
BLOCK     5    6    1
MEDIA            7
BLOCK     4    6    1
MEDIA            7
BLOCK     3    6    1
MEDIA            7
BLOCK     2    6    1
MEDIA            7
BLOCK     1    6    1
MEDIA            7
BLOCK     9    5    1
MEDIA            2,   3,   5,   6,   4
SURFACES         1,   2,   3,   4
SECTOR -1  0  0  0
SECTOR  1 -1  0  0
SECTOR  0  1 -1  0
SECTOR  0  0  1 -1
SECTOR  0  0  0  1
BLOCK     8    5    1
MEDIA            2
BLOCK     7    5    1
MEDIA            7
```

TABLE 6.3.1-3 (Cont-15/50)
STEEL BASKET MODEL FOR
KENO GENERALIZED GEOMETRY

```
BLOCK     6     5     1
MEDIA             2
BLOCK     5     5     1
MEDIA             2
BLOCK     4     5     1
MEDIA             2
BLOCK     3     5     1
MEDIA             7
BLOCK     2     5     1
MEDIA             2
BLOCK     1     5     1
MEDIA             2
BLOCK     9     4     1
MEDIA             2,    3,    5,    6,    4
SURFACES          1,    2,    3,    4
SECTOR -1  0  0  0
SECTOR  1 -1  0  0
SECTOR  0  1 -1  0
SECTOR  0  0  1 -1
SECTOR  0  0  0  1
BLOCK     8     4     1
MEDIA             2
BLOCK     7     4     1
MEDIA             7
BLOCK     6     4     1
MEDIA             2
BLOCK     5     4     1
MEDIA             1
BLOCK     4     4     1
MEDIA             2
BLOCK     3     4     1
MEDIA             7
BLOCK     2     4     1
MEDIA             2
BLOCK     1     4     1
MEDIA             2
BLOCK     9     3     1
MEDIA             2,    3,    5,    6,    4
SURFACES          1,    2,    3,    4
SECTOR -1  0  0  0
SECTOR  1 -1  0  0
SECTOR  0  1 -1  0
SECTOR  0  0  1 -1
SECTOR  0  0  0  1
BLOCK     8     3     1
MEDIA             2
BLOCK     7     3     1
MEDIA             7
BLOCK     6     3     1
MEDIA             2
BLOCK     5     3     1
MEDIA             2
BLOCK     4     3     1
MEDIA             2
BLOCK     3     3     1
MEDIA             7
```

TABLE 6.3.1-3 (Cont-16/50)
STEEL BASKET MODEL FOR
KENO GENERALIZED GEOMETRY

```
BLOCK      2    3    1
MEDIA           2
BLOCK      1    3    1
MEDIA           2
BLOCK      9    2    1
MEDIA           2,   3,    5,    6,    4
SURFACES        1,   2,    3,    4
SECTOR -1  0  0  0
SECTOR  1 -1  0  0
SECTOR  0  1 -1  0
SECTOR  0  0  1 -1
SECTOR  0  0  0  1
BLOCK      8    2    1
MEDIA           7
BLOCK      7    2    1
MEDIA           7
BLOCK      6    2    1
MEDIA           7
BLOCK      5    2    1
MEDIA           7
BLOCK      4    2    1
MEDIA           7
BLOCK      3    2    1
MEDIA           7
BLOCK      2    2    1
MEDIA           7
BLOCK      1    2    1
MEDIA           7
BLOCK      9    1    1
MEDIA           2,   3,    5,    6,    4
SURFACES        1,   2,    3,    4
SECTOR -1  0  0  0
SECTOR  1 -1  0  0
SECTOR  0  1 -1  0
SECTOR  0  0  1 -1
SECTOR  0  0  0  1
BLOCK      8    1    1
MEDIA           2
BLOCK      7    1    1
MEDIA           2
BLOCK      6    1    1
MEDIA           2
BLOCK      5    1    1
MEDIA           2
BLOCK      4    1    1
MEDIA           2
BLOCK      3    1    1
MEDIA           2
BLOCK      2    1    1
MEDIA           2
BLOCK      1    1    1
MEDIA           2
ZONE       2    1    2
BLOK1 XENDS -4.52438,  -4.04813,  -3.81000,  -3.06705,  -3.33248,
   3.06705,  3.33248,   3.81000,   4.04813,   4.52438
BLOK1 YENDS -46.83125, -18.50493, -13.37410, -13.12772, -12.96262,
```

TABLE 6.3.1-3 (Cont-17/50)
STEEL BASKET MODEL FOR
KENO GENERALIZED GEOMETRY

```
 -12.81530,  -5.64742,  -5.50010,  -5.33500,  -5.08100,  -5.08000
BLOK1 ZENDS -13.85100,  13.85100
BLOCK     1    1    1
MEDIA           2,    3,    5,    6,    4
SURFACES        1,    2,    3,    4
SECTOR -1  0  0  0
SECTOR  1 -1  0  0
SECTOR  0  1 -1  0
SECTOR  0  0  1 -1
SECTOR  0  0  0  1
BLOCK     2    1    1
MEDIA           2,    3,    5,    6,    4
SURFACES        1,    2,    3,    4
SECTOR -1  0  0  0
SECTOR  1 -1  0  0
SECTOR  0  1 -1  0
SECTOR  0  0  1 -1
SECTOR  0  0  0  1
BLOCK     3    1    1
MEDIA           2,    3,    5,    6,    4
SURFACES        1,    2,    3,    4
SECTOR -1  0  0  0
SECTOR  1 -1  0  0
SECTOR  0  1 -1  0
SECTOR  0  0  1 -1
SECTOR  0  0  0  1
BLOCK     4    1    1
MEDIA           2,    3,    5,    6,    4
SURFACES        1,    2,    3,    4
SECTOR -1  0  0  0
SECTOR  1 -1  0  0
SECTOR  0  1 -1  0
SECTOR  0  0  1 -1
SECTOR  0  0  0  1
BLOCK     5    1    1
MEDIA           2,    3,    5,    6,    4
SURFACES        1,    2,    3,    4
SECTOR -1  0  0  0
SECTOR  1 -1  0  0
SECTOR  0  1 -1  0
SECTOR  0  0  1 -1
SECTOR  0  0  0  1
BLOCK     6    1    1
MEDIA           2,    3,    5,    6,    4
SURFACES        1,    2,    3,    4
SECTOR -1  0  0  0
SECTOR  1 -1  0  0
SECTOR  0  1 -1  0
SECTOR  0  0  1 -1
SECTOR  0  0  0  1
BLOCK     7    1    1
MEDIA           2,    3,    5,    6,    4
SURFACES        1,    2,    3,    4
SECTOR -1  0  0  0
SECTOR  1 -1  0  0
SECTOR  0  1 -1  0
```

TABLE 6.3.1-3 (Cont-18/50)
STEEL BASKET MODEL FOR
KENO GENERALIZED GEOMETRY

```
SECTOR  0  0  1 -1
SECTOR  0  0  0  1
BLOCK     8    1    1
MEDIA            2,    3,    5,    6,    4
SURFACES         1,    2,    3,    4
SECTOR -1  0  0  0
SECTOR  1 -1  0  0
SECTOR  0  1 -1  0
SECTOR  0  0  1 -1
SECTOR  0  0  0  1
BLOCK     9    1    1
MEDIA            2,    3,    5,    6,    4
SURFACES         1,    2,    3,    4
SECTOR -1  0  0  0
SECTOR  1 -1  0  0
SECTOR  0  1 -1  0
SECTOR  0  0  1 -1
SECTOR  0  0  0  1
BLOCK     1    2    1
MEDIA            3
BLOCK     2    2    1
MEDIA            2
BLOCK     3    2    1
MEDIA            2
BLOCK     4    2    1
MEDIA            2
BLOCK     5    2    1
MEDIA            2
BLOCK     6    2    1
MEDIA            2
BLOCK     7    2    1
MEDIA            2
BLOCK     8    2    1
MEDIA            2
BLOCK     9    2    1
MEDIA            3
BLOCK     1    3    1
MEDIA            3
BLOCK     2    3    1
MEDIA            2
BLOCK     3    3    1
MEDIA            7
BLOCK     4    3    1
MEDIA            2
BLOCK     5    3    1
MEDIA            2
BLOCK     6    3    1
MEDIA            2
BLOCK     7    3    1
MEDIA            7
BLOCK     8    3    1
MEDIA            2
BLOCK     9    3    1
MEDIA            3
BLOCK     1    4    1
MEDIA            3
```

TABLE 6.3.1-3 (Cont-19/50)
STEEL BASKET MODEL FOR
KENO GENERALIZED GEOMETRY

```
BLOCK    2    4    1
MEDIA         2
BLOCK    3    4    1
MEDIA         7
BLOCK    4    4    1
MEDIA         7
BLOCK    5    4    1
MEDIA         7
BLOCK    6    4    1
MEDIA         7
BLOCK    7    4    1
MEDIA         7
BLOCK    8    4    1
MEDIA         2
BLOCK    9    4    1
MEDIA         3
BLOCK    1    5    1
MEDIA         3
BLOCK    2    5    1
MEDIA         2
BLOCK    3    5    1
MEDIA         7
BLOCK    4    5    1
MEDIA         2
BLOCK    5    5    1
MEDIA         2
BLOCK    6    5    1
MEDIA         2
BLOCK    7    5    1
MEDIA         7
BLOCK    8    5    1
MEDIA         2
BLOCK    9    5    1
MEDIA         3
BLOCK    1    6    1
MEDIA         3
BLOCK    2    6    1
MEDIA         2
BLOCK    3    6    1
MEDIA         7
BLOCK    4    6    1
MEDIA         2
BLOCK    5    6    1
MEDIA         1
BLOCK    6    6    1
MEDIA         2
BLOCK    7    6    1
MEDIA         7
BLOCK    8    6    1
MEDIA         2
BLOCK    9    6    1
MEDIA         3
BLOCK    1    7    1
MEDIA         3
BLOCK    2    7    1
MEDIA         2
```

TABLE 6.3.1-3 (Cont-20/50)
STEEL BASKET MODEL FOR
KENO GENERALIZED GEOMETRY

```
BLOCK    3    7    1
MEDIA         7
BLOCK    4    7    1
MEDIA         2
BLOCK    5    7    1
MEDIA         2
BLOCK    6    7    1
MEDIA         2
BLOCK    7    7    1
MEDIA         7
BLOCK    8    7    1
MEDIA         2
BLOCK    9    7    1
MEDIA         3
BLOCK    1    8    1
MEDIA         3
BLOCK    2    8    1
MEDIA         2
BLOCK    3    8    1
MEDIA         7
BLOCK    4    8    1
MEDIA         7
BLOCK    5    8    1
MEDIA         7
BLOCK    6    8    1
MEDIA         7
BLOCK    7    8    1
MEDIA         7
BLOCK    8    8    1
MEDIA         2
BLOCK    9    8    1
MEDIA         3
BLOCK    1    9    1
MEDIA         3
BLOCK    2    9    1
MEDIA         2
BLOCK    3    9    1
MEDIA         7
BLOCK    4    9    1
MEDIA         2
BLOCK    5    9    1
MEDIA         2
BLOCK    6    9    1
MEDIA         2
BLOCK    7    9    1
MEDIA         7
BLOCK    8    9    1
MEDIA         2
BLOCK    9    9    1
MEDIA         3
BLOCK    1   10    1
MEDIA         3
BLOCK    2   10    1
MEDIA         2
BLOCK    3   10    1
MEDIA         ^
```

TABLE 6.3.1-3 (Cont-21/50)
STEEL BASKET MODEL FOR
KENO GENERALIZED GEOMETRY

```
BLOCK     4   10    1
MEDIA           2
BLOCK     5   10    1
MEDIA           2
BLOCK     6   10    1
MEDIA           2
BLOCK     7   10    1
MEDIA           2
BLOCK     8   10    1
MEDIA           2
BLOCK     9   10    1
MEDIA           3
ZONE      2    3    2
BLOK1 XENDS  -4.52438,  -4.04813,  -3.81000,  -3.06705,  -3.33248,
   3.06705,   3.33248,   3.81000,   4.04813,   4.52438
BLOK1 YENDS   5.08000,   5.08100,   5.33500,   5.50010,   5.64742,
  12.81530,  12.96262,  13.12772,  13.37410,  18.50493,  46.83125
BLOK1 ZENDS -13.85100,  13.85100
BLOCK     1   10    1
MEDIA           2,    3,    5,    6,    4
SURFACES        1,    2,    3,    4
SECTOR -1  0  0  0
SECTOR  1 -1  0  0
SECTOR  0  1 -1  0
SECTOR  0  0  1 -1
SECTOR  0  0  0  1
BLOCK     2   10    1
MEDIA           2,    3,    5,    6,    4
SURFACES        1,    2,    3,    4
SECTOR -1  0  0  0
SECTOR  1 -1  0  0
SECTOR  0  1 -1  0
SECTOR  0  0  1 -1
SECTOR  0  0  0  1
BLOCK     3   10    1
MEDIA           2,    3,    5,    6,    4
SURFACES        1,    2,    3,    4
SECTOR -1  0  0  0
SECTOR  1 -1  0  0
SECTOR  0  1 -1  0
SECTOR  0  0  1 -1
SECTOR  0  0  0  1
BLOCK     4   10    1
MEDIA           2,    3,    5,    6,    4
SURFACES        1,    2,    3,    4
SECTOR -1  0  0  0
SECTOR  1 -1  0  0
SECTOR  0  1 -1  0
SECTOR  0  0  1 -1
SECTOR  0  0  0  1
BLOCK     5   10    1
MEDIA           2,    3,    5,    6,    4
SURFACES        1,    2,    3,    4
SECTOR -1  0  0  0
SECTOR  1 -1  0  0
SECTOR  0  1 -1  0
```

TABLE 6.3.1-3 (Cont-22/50)
STEEL BASKET MODEL FOR
KENO GENERALIZED GEOMETRY

```
SECTOR  0  0  1 -1
SECTOR  0  0  0  1
BLOCK     6   10    1
MEDIA           2,    3,    5,    6,    4
SURFACES        1,    2,    3,    4
SECTOR -1  0  0  0
SECTOR  1 -1  0  0
SECTOR  0  1 -1  0
SECTOR  0  0  1 -1
SECTOR  0  0  0  1
BLOCK     7   10    1
MEDIA           2,    3,    5,    6,    4
SURFACES        1,    2,    3,    4
SECTOR -1  0  0  0
SECTOR  1 -1  0  0
SECTOR  0  1 -1  0
SECTOR  0  0  1 -1
SECTOR  0  0  0  1
BLOCK     8   10    1
MEDIA           2,    3,    5,    6,    4
SURFACES        1,    2,    3,    4
SECTOR -1  0  0  0
SECTOR  1 -1  0  0
SECTOR  0  1 -1  0
SECTOR  0  0  1 -1
SECTOR  0  0  0  1
BLOCK     9   10    1
MEDIA           2,    3,    5,    6,    4
SURFACES        1,    2,    3,    4
SECTOR -1  0  0  0
SECTOR  1 -1  0  0
SECTOR  0  1 -1  0
SECTOR  0  0  1 -1
SECTOR  0  0  0  1
BLOCK     1    9    1
MEDIA           3
BLOCK     2    9    1
MEDIA           2
BLOCK     3    9    1
MEDIA           2
BLOCK     4    9    1
MEDIA           2
BLOCK     5    9    1
MEDIA           2
BLOCK     6    9    1
MEDIA           2
BLOCK     7    9    1
MEDIA           2
BLOCK     8    9    1
MEDIA           2
BLOCK     9    9    1
MEDIA           3
BLOCK     1    8    1
MEDIA           3
BLOCK     2    8    1
MEDIA           2
```

TABLE 6.3.1-3 (Cont-23/50)
STEEL BASKET MODEL FOR
KENO GENERALIZED GEOMETRY

```
BLOCK    3    8    1
MEDIA          7
BLOCK    4    8    1
MEDIA          2
BLOCK    5    8    1
MEDIA          2
BLOCK    6    8    1
MEDIA          2
BLOCK    7    8    1
MEDIA          7
BLOCK    8    8    1
MEDIA          2
BLOCK    9    8    1
MEDIA          3
BLOCK    1    7    1
MEDIA          3
BLOCK    2    7    1
MEDIA          2
BLOCK    3    7    1
MEDIA          7
BLOCK    4    7    1
MEDIA          7
BLOCK    5    7    1
MEDIA          7
BLOCK    6    7    1
MEDIA          7
BLOCK    7    7    1
MEDIA          7
BLOCK    8    7    1
MEDIA          2
BLOCK    9    7    1
MEDIA          3
BLOCK    1    6    1
MEDIA          3
BLOCK    2    6    1
MEDIA          2
BLOCK    3    6    1
MEDIA          7
BLOCK    4    6    1
MEDIA          2
BLOCK    5    6    1
MEDIA          2
BLOCK    6    6    1
MEDIA          2
BLOCK    7    6    1
MEDIA          7
BLOCK    8    6    1
MEDIA          2
BLOCK    9    6    1
MEDIA          3
BLOCK    1    5    1
MEDIA          3
BLOCK    2    5    1
MEDIA          2
BLOCK    3    5    1
MEDIA          7
```

TABLE 6.3.1-3 (Cont-24/50)
STEEL BASKET MODEL FOR
KENO GENERALIZED GEOMETRY

```
BLOCK    4    5    1
MEDIA         2
BLOCK    5    5    1
MEDIA         1
BLOCK    6    5    1
MEDIA         2
BLOCK    7    5    1
MEDIA         7
BLOCK    8    5    1
MEDIA         2
BLOCK    9    5    1
MEDIA         3
BLOCK    1    4    1
MEDIA         3
BLOCK    2    4    1
MEDIA         2
BLOCK    3    4    1
MEDIA         7
BLOCK    4    4    1
MEDIA         2
BLOCK    5    4    1
MEDIA         2
BLOCK    6    4    1
MEDIA         2
BLOCK    7    4    1
MEDIA         7
BLOCK    8    4    1
MEDIA         2
BLOCK    9    4    1
MEDIA         3
BLOCK    1    3    1
MEDIA         3
BLOCK    2    3    1
MEDIA         2
BLOCK    3    3    1
MEDIA         7
BLOCK    4    3    1
MEDIA         7
BLOCK    5    3    1
MEDIA         7
BLOCK    6    3    1
MEDIA         7
BLOCK    7    3    1
MEDIA         7
BLOCK    8    3    1
MEDIA         2
BLOCK    9    3    1
MEDIA         3
BLOCK    1    2    1
MEDIA         3
BLOCK    2    2    1
MEDIA         2
BLOCK    3    2    1
MEDIA         7
BLOCK    4    2    1
MEDIA         2
```

TABLE 6.3.1-3 (Cont-25/50)
STEEL BASKET MODEL FOR
KENO GENERALIZED GEOMETRY

```
BLOCK     5    2    1
MEDIA           2
BLOCK     6    2    1
MEDIA           2
BLOCK     7    2    1
MEDIA           7
BLOCK     8    2    1
MEDIA           2
BLOCK     9    2    1
MEDIA           3
BLOCK     1    1    1
MEDIA           3
BLOCK     2    1    1
MEDIA           2
BLOCK     3    1    1
MEDIA           2
BLOCK     4    1    1
MEDIA           2
BLOCK     5    1    1
MEDIA           2
BLOCK     6    1    1
MEDIA           2
BLOCK     7    1    1
MEDIA           2
BLOCK     8    1    1
MEDIA           2
BLOCK     9    1    1
MEDIA           3
ZONE      1    2    2
BLOK1 XENDS -46.83125, -18.36018, -17.14500, -16.66748, -16.40205,
 -10.26795, -10.00252,  -9.52501,  -9.52500,  -8.89000,  -7.93750,
  -7.45998,  -7.19455,  -4.52438
BLOK1 YENDS  -5.08000,  -4.60375,  -4.60374,  -4.34974,  -4.20242,
  -4.03732,   3.13056,   3.27788,   3.44298,   3.68936,   4.60375,
   5.08000
BLOK1 ZENDS -13.85100,  13.85100
BLOCK     1    1    1
MEDIA           2,    3,    5,    6,    4
SURFACES        1,    2,    3,    4
SECTOR -1  0  0  0
SECTOR  1 -1  0  0
SECTOR  0  1 -1  0
SECTOR  0  0  1 -1
SECTOR  0  0  0  1
BLOCK     1    2    1
MEDIA           2,    3,    5,    6,    4
SURFACES        1,    2,    3,    4
SECTOR -1  0  0  0
SECTOR  1 -1  0  0
SECTOR  0  1 -1  0
SECTOR  0  0  1 -1
SECTOR  0  0  0  1
BLOCK     1    3    1
MEDIA           2,    3,    5,    6,    4
SURFACES        1,    2,    3,    4
SECTOR -1  0  0  0
```

TABLE 6.3.1-3 (Cont-26/50)
STEEL BASKET MODEL FOR
KENO GENERALIZED GEOMETRY

```
SECTOR  1 -1  0  0
SECTOR  0  1 -1  0
SECTOR  0  0  1 -1
SECTOR  0  0  0  1
BLOCK     1    4    1
MEDIA            2,    3,    5,    6,    4
SURFACES         1,    2,    3,    4
SECTOR -1  0  0  0
SECTOR  1 -1  0  0
SECTOR  0  1 -1  0
SECTOR  0  0  1 -1
SECTOR  0  0  0  1
BLOCK     1    5    1
MEDIA            2,    3,    5,    6,    4
SURFACES         1,    2,    3,    4
SECTOR -1  0  0  0
SECTOR  1 -1  0  0
SECTOR  0  1 -1  0
SECTOR  0  0  1 -1
SECTOR  0  0  0  1
BLOCK     1    6    1
MEDIA            2,    3,    5,    6,    4
SURFACES         1,    2,    3,    4
SECTOR -1  0  0  0
SECTOR  1 -1  0  0
SECTOR  0  1 -1  0
SECTOR  0  0  1 -1
SECTOR  0  0  0  1
BLOCK     1    7    1
MEDIA            2,    3,    5,    6,    4
SURFACES         1,    2,    3,    4
SECTOR -1  0  0  0
SECTOR  1 -1  0  0
SECTOR  0  1 -1  0
SECTOR  0  0  1 -1
SECTOR  0  0  0  1
BLOCK     1    8    1
MEDIA            2,    3,    5,    6,    4
SURFACES         1,    2,    3,    4
SECTOR -1  0  0  0
SECTOR  1 -1  0  0
SECTOR  0  1 -1  0
SECTOR  0  0  1 -1
SECTOR  0  0  0  1
BLOCK     1    9    1
MEDIA            2,    3,    5,    6,    4
SURFACES         1,    2,    3,    4
SECTOR -1  0  0  0
SECTOR  1 -1  0  0
SECTOR  0  1 -1  0
SECTOR  0  0  1 -1
SECTOR  0  0  0  1
BLOCK     1   10    1
MEDIA            2,    3,    5,    6,    4
SURFACES         1,    2,    3,    4
SECTOR -1  0  0  0
```

TABLE 6.3.1-3 (Cont-27/50)
STEEL BASKET MODEL FOR
KENO GENERALIZED GEOMETRY

```
SECTOR  1 -1  0  0
SECTOR  0  1 -1  0
SECTOR  0  0  1 -1
SECTOR  0  0  0  1
BLOCK     1   11     1
MEDIA            2,    3,    5,    6,    4
SURFACES         1,    2,    3,    4
SECTOR -1  0  0  0
SECTOR  1 -1  0  0
SECTOR  0  1 -1  0
SECTOR  0  0  1 -1
SECTOR  0  0  0  1
BLOCK     2    1     1
MEDIA            3
BLOCK     2    2     1
MEDIA            2
BLOCK     2    3     1
MEDIA            2
BLOCK     2    4     1
MEDIA            2
BLOCK     2    5     1
MEDIA            2
BLOCK     2    6     1
MEDIA            2
BLOCK     2    7     1
MEDIA            2
BLOCK     2    8     1
MEDIA            2
BLOCK     2    9     1
MEDIA            2
BLOCK     2   10     1
MEDIA            2
BLOCK     2   11     1
MEDIA            3
BLOCK     3    1     1
MEDIA            3
BLOCK     3    2     1
MEDIA            2
BLOCK     3    3     1
MEDIA            7
BLOCK     3    4     1
MEDIA            7
BLOCK     3    5     1
MEDIA            7
BLOCK     3    6     1
MEDIA            7
BLOCK     3    7     1
MEDIA            7
BLOCK     3    8     1
MEDIA            7
BLOCK     3    9     1
MEDIA            7
BLOCK     3   10     1
MEDIA            2
BLOCK     3   11     1
MEDIA            3
```

TABLE 6.3.1-3 (Cont-28/50)
STEEL BASKET MODEL FOR
KENO GENERALIZED GEOMETRY

```
BLOCK    4    1    1
MEDIA          3
BLOCK    4    2    1
MEDIA          2
BLOCK    4    3    1
MEDIA          2
BLOCK    4    4    1
MEDIA          7
BLOCK    4    5    1
MEDIA          2
BLOCK    4    6    1
MEDIA          2
BLOCK    4    7    1
MEDIA          2
BLOCK    4    8    1
MEDIA          7
BLOCK    4    9    1
MEDIA          2
BLOCK    4   10    1
MEDIA          2
BLOCK    4   11    1
MEDIA          3
BLOCK    5    1    1
MEDIA          3
BLOCK    5    2    1
MEDIA          2
BLOCK    5    3    1
MEDIA          2
BLOCK    5    4    1
MEDIA          7
BLOCK    5    5    1
MEDIA          2
BLOCK    5    6    1
MEDIA          1
BLOCK    5    7    1
MEDIA          2
BLOCK    5    8    1
MEDIA          7
BLOCK    5    9    1
MEDIA          2
BLOCK    5   10    1
MEDIA          2
BLOCK    5   11    1
MEDIA          3
BLOCK    6    1    1
MEDIA          3
BLOCK    6    2    1
MEDIA          2
BLOCK    6    3    1
MEDIA          2
BLOCK    6    4    1
MEDIA          7
BLOCK    6    5    1
MEDIA          2
BLOCK    6    6    1
MEDIA          2
```

TABLE 6.3.1-3 (Cont-29/50)
STEEL BASKET MODEL FOR
KENO GENERALIZED GEOMETRY

```
BLOCK    6    7    1
MEDIA          2
BLOCK    6    8    1
MEDIA          7
BLOCK    6    9    1
MEDIA          2
BLOCK    6   10    1
MEDIA          2
BLOCK    6   11    1
MEDIA          3
BLOCK    7    1    1
MEDIA          3
BLOCK    7    2    1
MEDIA          2
BLOCK    7    3    1
MEDIA          7
BLOCK    7    4    1
MEDIA          7
BLOCK    7    5    1
MEDIA          7
BLOCK    7    6    1
MEDIA          7
BLOCK    7    7    1
MEDIA          7
BLOCK    7    8    1
MEDIA          7
BLOCK    7    9    1
MEDIA          7
BLOCK    7   10    1
MEDIA          2
BLOCK    7   11    1
MEDIA          3
BLOCK    8    1    1
MEDIA          3
BLOCK    8    2    1
MEDIA          2
BLOCK    8    3    1
MEDIA          2
BLOCK    8    4    1
MEDIA          2
BLOCK    8    5    1
MEDIA          2
BLOCK    8    6    1
MEDIA          2
BLOCK    8    7    1
MEDIA          2
BLOCK    8    8    1
MEDIA          2
BLOCK    8    9    1
MEDIA          2
BLOCK    8   10    1
MEDIA          2
BLOCK    8   11    1
MEDIA          3
BLOCK    9    1    1
MEDIA          3
```

TABLE 6.3.1-3 (Cont-30/50)
STEEL BASKET MODEL FOR
KENO GENERALIZED GEOMETRY

```
BLOCK    9    2    1
MEDIA          3
BLOCK    9    3    1
MEDIA          3
BLOCK    9    4    1
MEDIA          3
BLOCK    9    5    1
MEDIA          3
BLOCK    9    6    1
MEDIA          3
BLOCK    9    7    1
MEDIA          3
BLOCK    9    8    1
MEDIA          3
BLOCK    9    9    1
MEDIA          3
BLOCK    9   10    1
MEDIA          3
BLOCK    9   11    1
MEDIA          3
BLOCK   10    1    1
MEDIA          3
BLOCK   10    2    1
MEDIA          2
BLOCK   10    3    1
MEDIA          2
BLOCK   10    4    1
MEDIA          2
BLOCK   10    5    1
MEDIA          2
BLOCK   10    6    1
MEDIA          2
BLOCK   10    7    1
MEDIA          2
BLOCK   10    8    1
MEDIA          2
BLOCK   10    9    1
MEDIA          2
BLOCK   10   10    1
MEDIA          2
BLOCK   10   11    1
MEDIA          3
BLOCK   11    1    1
MEDIA          3
BLOCK   11    2    1
MEDIA          2
BLOCK   11    3    1
MEDIA          7
BLOCK   11    4    1
MEDIA          7
BLOCK   11    5    1
MEDIA          7
BLOCK   11    6    1
MEDIA          7
BLOCK   11    7    1
MEDIA          7
```

TABLE 6.3.1-3 (Cont-31/50)
STEEL BASKET MODEL FOR
KENO GENERALIZED GEOMETRY

```
BLOCK    11    8    1
MEDIA           7
BLOCK    11    9    1
MEDIA           7
BLOCK    11   10    1
MEDIA           2
BLOCK    11   11    1
MEDIA           3
BLOCK    12    1    1
MEDIA           3
BLOCK    12    2    1
MEDIA           2
BLOCK    12    3    1
MEDIA           2
BLOCK    12    4    1
MEDIA           7
BLOCK    12    5    1
MEDIA           2
BLOCK    12    6    1
MEDIA           2
BLOCK    12    7    1
MEDIA           2
BLOCK    12    8    1
MEDIA           7
BLOCK    12    9    1
MEDIA           2
BLOCK    12   10    1
MEDIA           2
BLOCK    12   11    1
MEDIA           3
BLOCK    13    1    1
MEDIA           3
BLOCK    13    2    1
MEDIA           2
BLOCK    13    3    1
MEDIA           2
BLOCK    13    4    1
MEDIA           7
BLOCK    13    5    1
MEDIA           2
BLOCK    13    6    1
MEDIA           1
BLOCK    13    7    1
MEDIA           2
BLOCK    13    8    1
MEDIA           7
BLOCK    13    9    1
MEDIA           2
BLOCK    13   10    1
MEDIA           2
BLOCK    13   11    1
MEDIA           3
ZONE      3    2    2
BLOK1 XENDS   4.52438,   7.19455,   7.45998,   7.93750,   8.89000,
    9.52500,  9.52501,  10.00252,  10.26795,  16.40205,  16.66748,
   17.14500, 18.36018,  46.83125
```

TABLE 6.3.1-3 (Cont-32/50)
STEEL BASKET MODEL FOR
KENO GENERALIZED GEOMETRY

```
BLOK1 YENDS  -5.08000,  -4.60375,  -4.60374,  -4.34974,  -4.20242,
  -4.03732,   3.13056,   3.27788,   3.44298,   3.68936,   4.60375,
   5.08000
BLOK1 ZENDS -13.85100,  13.85100
BLOCK    13    1    1
MEDIA            2,    3,    5,    6,    4
SURFACES         1,    2,    3,    4
SECTOR -1  0  0  0
SECTOR  1 -1  0  0
SECTOR  0  1 -1  0
SECTOR  0  0  1 -1
SECTOR  0  0  0  1
BLOCK    13    2    1
MEDIA            2,    3,    5,    6,    4
SURFACES         1,    2,    3,    4
SECTOR -1  0  0  0
SECTOR  1 -1  0  0
SECTOR  0  1 -1  0
SECTOR  0  0  1 -1
SECTOR  0  0  0  1
BLOCK    13    3    1
MEDIA            2,    3,    5,    6,    4
SURFACES         1,    2,    3,    4
SECTOR -1  0  0  0
SECTOR  1 -1  0  0
SECTOR  0  1 -1  0
SECTOR  0  0  1 -1
SECTOR  0  0  0  1
BLOCK    13    4    1
MEDIA            2,    3,    5,    6,    4
SURFACES         1,    2,    3,    4
SECTOR -1  0  0  0
SECTOR  1 -1  0  0
SECTOR  0  1 -1  0
SECTOR  0  0  1 -1
SECTOR  0  0  0  1
BLOCK    13    5    1
MEDIA            2,    3,    5,    6,    4
SURFACES         1,    2,    3,    4
SECTOR -1  0  0  0
SECTOR  1 -1  0  0
SECTOR  0  1 -1  0
SECTOR  0  0  1 -1
SECTOR  0  0  0  1
BLOCK    13    6    1
MEDIA            2,    3,    5,    6,    4
SURFACES         1,    2,    3,    4
SECTOR -1  0  0  0
SECTOR  1 -1  0  0
SECTOR  0  1 -1  0
SECTOR  0  0  1 -1
SECTOR  0  0  0  1
BLOCK    13    7    1
MEDIA            2,    3,    5,    6,    4
SURFACES         1,    2,    3,    4
SECTOR -1  0  0  0
```

TABLE 6.3.1-3 (Cont-33/50)
STEEL BASKET MODEL FOR
KENO GENERALIZED GEOMETRY

```
SECTOR  1 -1  0  0
SECTOR  0  1 -1  0
SECTOR  0  0  1 -1
SECTOR  0  0  0  1
BLOCK    13    8    1
MEDIA            2,    3,    5,    6,    4
SURFACES         1,    2,    3,    4
SECTOR -1  0  0  0
SECTOR  1 -1  0  0
SECTOR  0  1 -1  0
SECTOR  0  0  1 -1
SECTOR  0  0  0  1
BLOCK    13    9    1
MEDIA            2,    3,    5,    6,    4
SURFACES         1,    2,    3,    4
SECTOR -1  0  0  0
SECTOR  1 -1  0  0
SECTOR  0  1 -1  0
SECTOR  0  0  1 -1
SECTOR  0  0  0  1
BLOCK    13   10    1
MEDIA            2,    3,    5,    6,    4
SURFACES         1,    2,    3,    4
SECTOR -1  0  0  0
SECTOR  1 -1  0  0
SECTOR  0  1 -1  0
SECTOR  0  0  1 -1
SECTOR  0  0  0  1
BLOCK    13   11    1
MEDIA            2,    3,    5,    6,    4
SURFACES         1,    2,    3,    4
SECTOR -1  0  0  0
SECTOR  1 -1  0  0
SECTOR  0  1 -1  0
SECTOR  0  0  1 -1
SECTOR  0  0  0  1
BLOCK    12    1    1
MEDIA            3
BLOCK    12    2    1
MEDIA            2
BLOCK    12    3    1
MEDIA            2
BLOCK    12    4    1
MEDIA            2
BLOCK    12    5    1
MEDIA            2
BLOCK    12    6    1
MEDIA            2
BLOCK    12    7    1
MEDIA            2
BLOCK    12    8    1
MEDIA            2
BLOCK    12    9    1
MEDIA            2
BLOCK    12   10    1
MEDIA            2
```

TABLE 6.3.1-3 (Cont-34/50)
STEEL BASKET MODEL FOR
KENO GENERALIZED GEOMETRY

```
BLOCK    12   11    1
MEDIA          3
BLOCK    11    1    1
MEDIA          3
BLOCK    11    2    1
MEDIA          2
BLOCK    11    3    1
MEDIA          7
BLOCK    11    4    1
MEDIA          7
BLOCK    11    5    1
MEDIA          7
BLOCK    11    6    1
MEDIA          7
BLOCK    11    7    1
MEDIA          7
BLOCK    11    8    1
MEDIA          7
BLOCK    11    9    1
MEDIA          7
BLOCK    11   10    1
MEDIA          2
BLOCK    11   11    1
MEDIA          3
BLOCK    10    1    1
MEDIA          3
BLOCK    10    2    1
MEDIA          2
BLOCK    10    3    1
MEDIA          2
BLOCK    10    4    1
MEDIA          7
BLOCK    10    5    1
MEDIA          2
BLOCK    10    6    1
MEDIA          2
BLOCK    10    7    1
MEDIA          2
BLOCK    10    8    1
MEDIA          7
BLOCK    10    9    1
MEDIA          2
BLOCK    10   10    1
MEDIA          2
BLOCK    10   11    1
MEDIA          3
BLOCK     9    1    1
MEDIA          3
BLOCK     9    2    1
MEDIA          2
BLOCK     9    3    1
MEDIA          2
BLOCK     9    4    1
MEDIA          7
BLOCK     9    5    1
MEDIA          2
```

TABLE 6.3.1-3 (Cont-35/50)
STEEL BASKET MODEL FOR
KENO GENERALIZED GEOMETRY

```
BLOCK    9    6    1
MEDIA          1
BLOCK    9    7    1
MEDIA          2
BLOCK    9    8    1
MEDIA          7
BLOCK    9    9    1
MEDIA          2
BLOCK    9   10    1
MEDIA          2
BLOCK    9   11    1
MEDIA          3
BLOCK    8    1    1
MEDIA          3
BLOCK    8    2    1
MEDIA          2
BLOCK    8    3    1
MEDIA          2
BLOCK    8    4    1
MEDIA          7
BLOCK    8    5    1
MEDIA          2
BLOCK    8    6    1
MEDIA          2
BLOCK    8    7    1
MEDIA          2
BLOCK    8    8    1
MEDIA          7
BLOCK    8    9    1
MEDIA          2
BLOCK    8   10    1
MEDIA          2
BLOCK    8   11    1
MEDIA          3
BLOCK    7    1    1
MEDIA          3
BLOCK    7    2    1
MEDIA          2
BLOCK    7    3    1
MEDIA          7
BLOCK    7    4    1
MEDIA          7
BLOCK    7    5    1
MEDIA          7
BLOCK    7    6    1
MEDIA          7
BLOCK    7    7    1
MEDIA          7
BLOCK    7    8    1
MEDIA          7
BLOCK    7    9    1
MEDIA          7
BLOCK    7   10    1
MEDIA          2
BLOCK    7   11    1
MEDIA
```

TABLE 6.3.1-3 (Cont-36/50)
STEEL BASKET MODEL FOR
KENO GENERALIZED GEOMETRY


```
BLOCK    6    1    1
MEDIA          3
BLOCK    6    2    1
MEDIA          2
BLOCK    6    3    1
MEDIA          2
BLOCK    6    4    1
MEDIA          2
BLOCK    6    5    1
MEDIA          2
BLOCK    6    6    1
MEDIA          2
BLOCK    6    7    1
MEDIA          2
BLOCK    6    8    1
MEDIA          2
BLOCK    6    9    1
MEDIA          2
BLOCK    6   10    1
MEDIA          2
BLOCK    6   11    1
MEDIA          3
BLOCK    5    1    1
MEDIA          3
BLOCK    5    2    1
MEDIA          3
BLOCK    5    3    1
MEDIA          3
BLOCK    5    4    1
MEDIA          3
BLOCK    5    5    1
MEDIA          3
BLOCK    5    6    1
MEDIA          3
BLOCK    5    7    1
MEDIA          3
BLOCK    5    8    1
MEDIA          3
BLOCK    5    9    1
MEDIA          3
BLOCK    5   10    1
MEDIA          3
BLOCK    5   11    1
MEDIA          3
BLOCK    4    1    1
MEDIA          3
BLOCK    4    2    1
MEDIA          2
BLOCK    4    3    1
MEDIA          2
BLOCK    4    4    1
MEDIA          2
BLOCK    4    5    1
MEDIA          2
BLOCK    4    6    1
MEDIA          2
```

TABLE 6.3.1-3 (Cont-37/50)
STEEL BASKET MODEL FOR
KENO GENERALIZED GEOMETRY

```
BLOCK    4    7    1
MEDIA          2
BLOCK    4    8    1
MEDIA          2
BLOCK    4    9    1
MEDIA          2
BLOCK    4   10    1
MEDIA          2
BLOCK    4   11    1
MEDIA          3
BLOCK    3    1    1
MEDIA          3
BLOCK    3    2    1
MEDIA          2
BLOCK    3    3    1
MEDIA          7
BLOCK    3    4    1
MEDIA          7
BLOCK    3    5    1
MEDIA          7
BLOCK    3    6    1
MEDIA          7
BLOCK    3    7    1
MEDIA          7
BLOCK    3    8    1
MEDIA          7
BLOCK    3    9    1
MEDIA          7
BLOCK    3   10    1
MEDIA          2
BLOCK    3   11    1
MEDIA          3
BLOCK    2    1    1
MEDIA          3
BLOCK    2    2    1
MEDIA          2
BLOCK    2    3    1
MEDIA          2
BLOCK    2    4    1
MEDIA          7
BLOCK    2    5    1
MEDIA          2
BLOCK    2    6    1
MEDIA          2
BLOCK    2    7    1
MEDIA          2
BLOCK    2    8    1
MEDIA          7
BLOCK    2    9    1
MEDIA          2
BLOCK    2   10    1
MEDIA          2
BLOCK    2   11    1
MEDIA          3
BLOCK    1    1    1
MEDIA          3
```

TABLE 6.3.1-3 (Cont-38/50)
STEEL BASKET MODEL FOR
KENO GENERALIZED GEOMETRY

```
BLOCK     1    2    1
MEDIA           2
BLOCK     1    3    1
MEDIA           2
BLOCK     1    4    1
MEDIA           7
BLOCK     1    5    1
MEDIA           2
BLOCK     1    6    1
MEDIA           1
BLOCK     1    7    1
MEDIA           2
BLOCK     1    8    1
MEDIA           7
BLOCK     1    9    1
MEDIA           2
BLOCK     1   10    1
MEDIA           2
BLOCK     1   11    1
MEDIA           3
ZONE      2    2    2
BLOK1 XENDS  -4.52438,  -1.06045,  -0.79502,  -0.31751,  -0.31750,
   0.31750,   0.31751,   0.79502,   1.06045,   4.52438
BLOK1 YENDS  -5.08000,  -4.60375,  -4.60374,  -4.34974,  -4.20242,
  -4.03732,   3.13056,   3.27788,   3.44298,   3.68936,   4.60375,
   5.08000
BLOK1 ZENDS -13.85100,  13.85100
BLOCK     1    1    1
MEDIA           3
BLOCK     1    2    1
MEDIA           2
BLOCK     1    3    1
MEDIA           2
BLOCK     1    4    1
MEDIA           7
BLOCK     1    5    1
MEDIA           2
BLOCK     1    6    1
MEDIA           1
BLOCK     1    7    1
MEDIA           2
BLOCK     1    8    1
MEDIA           7
BLOCK     1    9    1
MEDIA           2
BLOCK     1   10    1
MEDIA           2
BLOCK     1   11    1
MEDIA           3
BLOCK     9    1    1
MEDIA           3
BLOCK     9    2    1
MEDIA           2
BLOCK     9    3    1
MEDIA           2
BLOCK     9    4    1
```

TABLE 6.3.1-3 (Cont-39/50)
STEEL BASKET MODEL FOR
KENO GENERALIZED GEOMETRY

```
MEDIA          7
BLOCK    9     5     1
MEDIA          2
BLOCK    9     6     1
MEDIA          1
BLOCK    9     7     1
MEDIA          2
BLOCK    9     8     1
MEDIA          7
BLOCK    9     9     1
MEDIA          2
BLOCK    9    10     1
MEDIA          2
BLOCK    9    11     1
MEDIA          3
BLOCK    2     1     1
MEDIA          3
BLOCK    2     2     1
MEDIA          2
BLOCK    2     3     1
MEDIA          2
BLOCK    2     4     1
MEDIA          7
BLOCK    2     5     1
MEDIA          2
BLOCK    2     6     1
MEDIA          2
BLOCK    2     7     1
MEDIA          2
BLOCK    2     8     1
MEDIA          7
BLOCK    2     9     1
MEDIA          2
BLOCK    2    10     1
MEDIA          2
BLOCK    2    11     1
MEDIA          3
BLOCK    8     1     1
MEDIA          3
BLOCK    8     2     1
MEDIA          2
BLOCK    8     3     1
MEDIA          2
BLOCK    8     4     1
MEDIA          7
BLOCK    8     5     1
MEDIA          2
BLOCK    8     6     1
MEDIA          2
BLOCK    8     7     1
MEDIA          2
BLOCK    8     8     1
MEDIA          7
BLOCK    8     9     1
MEDIA          2
BLOCK    8    10     1
```

TABLE 6.3.1-3 (Cont-40/50)
STEEL BASKET MODEL FOR
KENO GENERALIZED GEOMETRY

```
MEDIA          2
BLOCK    8    11    1
MEDIA          3
BLOCK    3     1    1
MEDIA          3
BLOCK    3     2    1
MEDIA          2
BLOCK    3     3    1
MEDIA          7
BLOCK    3     4    1
MEDIA          7
BLOCK    3     5    1
MEDIA          7
BLOCK    3     6    1
MEDIA          7
BLOCK    3     7    1
MEDIA          7
BLOCK    3     8    1
MEDIA          7
BLOCK    3     9    1
MEDIA          7
BLOCK    3    10    1
MEDIA          2
BLOCK    3    11    1
MEDIA          3
BLOCK    7     1    1
MEDIA          3
BLOCK    7     2    1
MEDIA          2
BLOCK    7     3    1
MEDIA          7
BLOCK    7     4    1
MEDIA          7
BLOCK    7     5    1
MEDIA          7
BLOCK    7     6    1
MEDIA          7
BLOCK    7     7    1
MEDIA          7
BLOCK    7     8    1
MEDIA          7
BLOCK    7     9    1
MEDIA          7
BLOCK    7    10    1
MEDIA          2
BLOCK    7    11    1
MEDIA          3
BLOCK    4     1    1
MEDIA          3
BLOCK    4     2    1
MEDIA          2
BLOCK    4     3    1
MEDIA          2
BLOCK    4     4    1
MEDIA          2
BLOCK    4     5    1
```

TABLE 6.3.1-3 (Cont-41/50)
STEEL BASKET MODEL FOR
KENO GENERALIZED GEOMETRY

```
MEDIA          2
BLOCK    4     6     1
MEDIA          2
BLOCK    4     7     1
MEDIA          2
BLOCK    4     8     1
MEDIA          2
BLOCK    4     9     1
MEDIA          2
BLOCK    4    10     1
MEDIA          2
BLOCK    4    11     1
MEDIA          3
BLOCK    6     1     1
MEDIA          3
BLOCK    6     2     1
MEDIA          2
BLOCK    6     3     1
MEDIA          2
BLOCK    6     4     1
MEDIA          2
BLOCK    6     5     1
MEDIA          2
BLOCK    6     6     1
MEDIA          2
BLOCK    6     7     1
MEDIA          2
BLOCK    6     8     1
MEDIA          2
BLOCK    6     9     1
MEDIA          2
BLOCK    6    10     1
MEDIA          2
BLOCK    6    11     1
MEDIA          3
BLOCK    5     1     1
MEDIA          3
BLOCK    5     2     1
MEDIA          3
BLOCK    5     3     1
MEDIA          3
BLOCK    5     4     1
MEDIA          3
BLOCK    5     5     1
MEDIA          3
BLOCK    5     6     1
MEDIA          3
BLOCK    5     7     1
MEDIA          3
BLOCK    5     8     1
MEDIA          3
BLOCK    5     9     1
MEDIA          3
BLOCK    5    10     1
MEDIA          3
BLOCK    5    11     1
```

TABLE 6.3.1-3 (Cont-42/50)
STEEL BASKET MODEL FOR
KENO GENERALIZED GEOMETRY

```
MEDIA          3
ZONE      1    1    1
BLOK1 XENDS -46.83125,  -4.52438
BLOK1 YENDS -46.83125,  -5.08000
BLOK1 ZENDS -16.78788, -13.85100
BLOCK     1    1    1
MEDIA          2,    3,    5,    6,    4
SURFACES       1,    2,    3,    4
SECTOR -1  0  0  0
SECTOR  1 -1  0  0
SECTOR  0  1 -1  0
SECTOR  0  0  1 -1
SECTOR  0  0  0  1
ZONE      1    3    1
BLOK1 XENDS -46.83125,  -4.52438
BLOK1 YENDS   5.08000,  46.83125
BLOK1 ZENDS -16.78788, -13.85100
BLOCK     1    1    1
MEDIA          2,    3,    5,    6,    4
SURFACES       1,    2,    3,    4
SECTOR -1  0  0  0
SECTOR  1 -1  0  0
SECTOR  0  1 -1  0
SECTOR  0  0  1 -1
SECTOR  0  0  0  1
ZONE      3    1    1
BLOK1 XENDS   4.52438,  46.83125
BLOK1 YENDS -46.83125,  -5.08000
BLOK1 ZENDS -16.78788, -13.85100
BLOCK     1    1    1
MEDIA          2,    3,    5,    6,    4
SURFACES       1,    2,    3,    4
SECTOR -1  0  0  0
SECTOR  1 -1  0  0
SECTOR  0  1 -1  0
SECTOR  0  0  1 -1
SECTOR  0  0  0  1
ZONE      3    3    1
BLOK1 XENDS   4.52438,  46.83125
BLOK1 YENDS   5.08000,  46.83125
BLOK1 ZENDS -16.78788, -13.85100
BLOCK     1    1    1
MEDIA          2,    3,    5,    6,    4
SURFACES       1,    2,    3,    4
SECTOR -1  0  0  0
SECTOR  1 -1  0  0
SECTOR  0  1 -1  0
SECTOR  0  0  1 -1
SECTOR  0  0  0  1
ZONE      2    1    1
BLOK1 XENDS  -4.52438,  -4.04813,   4.04813,   4.52438
BLOK1 YENDS -46.83125, -18.50493,  -5.08000
BLOK1 ZENDS -16.78788, -13.85100
BLOCK     1    1    1
MEDIA          2,    3,    5,    6,    4
SURFACES       1,    2,    3,    4
```

TABLE 6.3.1-3 (Cont-43/50)
STEEL BASKET MODEL FOR
KENO GENERALIZED GEOMETRY

```
SECTOR -1  0  0  0
SECTOR  1 -1  0  0
SECTOR  0  1 -1  0
SECTOR  0  0  1 -1
SECTOR  0  0  0  1
BLOCK     2    1    1
MEDIA          2,    3,    5,    6,    4
SURFACES       1,    2,    3,    4
SECTOR -1  0  0  0
SECTOR  1 -1  0  0
SECTOR  0  1 -1  0
SECTOR  0  0  1 -1
SECTOR  0  0  0  1
BLOCK     3    1    1
MEDIA          2,    3,    5,    6,    4
SURFACES       1,    2,    3,    4
SECTOR -1  0  0  0
SECTOR  1 -1  0  0
SECTOR  0  1 -1  0
SECTOR  0  0  1 -1
SECTOR  0  0  0  1
BLOCK     1    2    1
MEDIA          3
BLOCK     2    2    1
MEDIA          2
BLOCK     3    2    1
MEDIA          3
ZONE      2    3    1
BLOK1 XENDS  -4.52438,  -4.04813,   4.04813,   4.52438
BLOK1 YENDS   5.08000,  18.50493,  46.83125
BLOK1 ZENDS -16.78788, -13.85100
BLOCK     1    2    1
MEDIA          2,    3,    5,    6,    4
SURFACES       1,    2,    3,    4
SECTOR -1  0  0  0
SECTOR  1 -1  0  0
SECTOR  0  1 -1  0
SECTOR  0  0  1 -1
SECTOR  0  0  0  1
BLOCK     2    2    1
MEDIA          2,    3,    5,    6,    4
SURFACES       1,    2,    3,    4
SECTOR -1  0  0  0
SECTOR  1 -1  0  0
SECTOR  0  1 -1  0
SECTOR  0  0  1 -1
SECTOR  0  0  0  1
BLOCK     3    2    1
MEDIA          2,    3,    5,    6,    4
SURFACES       1,    2,    3,    4
SECTOR -1  0  0  0
SECTOR  1 -1  0  0
SECTOR  0  1 -1  0
SECTOR  0  0  1 -1
SECTOR  0  0  0  1
BLOCK     1    1    1
```

TABLE 6.3.1-3 (Cont-44/50)
STEEL BASKET MODEL FOR
KENO GENERALIZED GEOMETRY

```
MEDIA          3
BLOCK     2    1    1
MEDIA          2
BLOCK     3    1    1
MEDIA          3
ZONE      1    2    1
BLOK1 XENDS -46.83125, -18.36018,  -9.52500,  -8.89000,  -4.52438
BLOK1 YENDS  -5.08000,  -4.60375,   4.60375,   5.08000
BLOK1 ZENDS -16.78788, -13.85100
BLOCK     1    1    1
MEDIA          2,    3,    5,    6,    4
SURFACES       1,    2,    3,    4
SECTOR -1  0  0  0
SECTOR  1 -1  0  0
SECTOR  0  1 -1  0
SECTOR  0  0  1 -1
SECTOR  0  0  0  1
BLOCK     1    2    1
MEDIA          2,    3,    5,    6,    4
SURFACES       1,    2,    3,    4
SECTOR -1  0  0  0
SECTOR  1 -1  0  0
SECTOR  0  1 -1  0
SECTOR  0  0  1 -1
SECTOR  0  0  0  1
BLOCK     1    3    1
MEDIA          2,    3,    5,    6,    4
SURFACES       1,    2,    3,    4
SECTOR -1  0  0  0
SECTOR  1 -1  0  0
SECTOR  0  1 -1  0
SECTOR  0  0  1 -1
SECTOR  0  0  0  1
BLOCK     2    1    1
MEDIA          3
BLOCK     2    2    1
MEDIA          2
BLOCK     2    3    1
MEDIA          3
BLOCK     3    1    1
MEDIA          3
BLOCK     3    2    1
MEDIA          3
BLOCK     3    3    1
MEDIA          3
BLOCK     4    1    1
MEDIA          3
BLOCK     4    2    1
MEDIA          2
BLOCK     4    3    1
MEDIA          3
ZONE      3    2    1
BLOK1 XENDS   4.52438,   8.89000,   9.52500,  18.36018,  46.83125
BLOK1 YENDS  -5.08000,  -4.60375,   4.60375,   5.08000
BLOK1 ZENDS -16.78788, -13.85100
BLOCK     4    1    1
```

TABLE 6.3.1-3 (Cont-45/50)
STEEL BASKET MODEL FOR
KENO GENERALIZED GEOMETRY

```
MEDIA          2,    3,    5,    6,    4
SURFACES       1,    2,    3,    4
SECTOR -1  0  0  0
SECTOR  1 -1  0  0
SECTOR  0  1 -1  0
SECTOR  0  0  1 -1
SECTOR  0  0  0  1
BLOCK     4    2    1
MEDIA          2,    3,    5,    6,    4
SURFACES       1,    2,    3,    4
SECTOR -1  0  0  0
SECTOR  1 -1  0  0
SECTOR  0  1 -1  0
SECTOR  0  0  1 -1
SECTOR  0  0  0  1
BLOCK     4    3    1
MEDIA          2,    3,    5,    6,    4
SURFACES       1,    2,    3,    4
SECTOR -1  0  0  0
SECTOR  1 -1  0  0
SECTOR  0  1 -1  0
SECTOR  0  0  1 -1
SECTOR  0  0  0  1
BLOCK     3    1    1
MEDIA          3
BLOCK     3    2    1
MEDIA          2
BLOCK     3    3    1
MEDIA          3
BLOCK     2    1    1
MEDIA          3
BLOCK     2    2    1
MEDIA          3
BLOCK     2    3    1
MEDIA          3
BLOCK     1    1    1
MEDIA          3
BLOCK     1    2    1
MEDIA          2
BLOCK     1    3    1
MEDIA          3
ZONE      2    2    1
BLOK1 XENDS  -4.52438,  -0.31750,   0.31750,   4.52438
BLOK1 YENDS  -5.08000,  -4.60375,   4.60375,   5.08000
BLOK1 ZENDS -16.78788, -13.85100
BLOCK     1    1    1
MEDIA          3
BLOCK     1    2    1
MEDIA          2
BLOCK     1    3    1
MEDIA          3
BLOCK     3    1    1
MEDIA          3
BLOCK     3    2    1
MEDIA          2
BLOCK     3    3    1
```

TABLE 6.3.1-3 (Cont-46/50)
STEEL BASKET MODEL FOR
KENO GENERALIZED GEOMETRY

```
MEDIA          3
BLOCK     2    1    1
MEDIA          3
BLOCK     2    2    1
MEDIA          3
BLOCK     2    3    1
MEDIA          3
ZONE      1    1    3
BLOK1 XENDS -46.83125,  -4.52438
BLOK1 YENDS -46.83125,  -5.08000
BLOK1 ZENDS  13.85100,  16.78788
BLOCK     1    1    1
MEDIA          2,    3,    5,    6,    4
SURFACES       1,    2,    3,    4
SECTOR -1  0  0  0
SECTOR  1 -1  0  0
SECTOR  0  1 -1  0
SECTOR  0  0  1 -1
SECTOR  0  0  0  1
ZONE      1    3    3
BLOK1 XENDS -46.83125,  -4.52438
BLOK1 YENDS   5.08000,  46.83125
BLOK1 ZENDS  13.85100,  16.78788
BLOCK     1    1    1
MEDIA          2,    3,    5,    6,    4
SURFACES       1,    2,    3,    4
SECTOR -1  0  0  0
SECTOR  1 -1  0  0
SECTOR  0  1 -1  0
SECTOR  0  0  1 -1
SECTOR  0  0  0  1
ZONE      3    1    3
BLOK1 XENDS   4.52438,  46.83125
BLOK1 YENDS -46.83125,  -5.08000
BLOK1 ZENDS  13.85100,  16.78788
BLOCK     1    1    1
MEDIA          2,    3,    5,    6,    4
SURFACES       1,    2,    3,    4
SECTOR -1  0  0  0
SECTOR  1 -1  0  0
SECTOR  0  1 -1  0
SECTOR  0  0  1 -1
SECTOR  0  0  0  1
ZONE      3    3    3
BLOK1 XENDS   4.52438,  46.83125
BLOK1 YENDS   5.08000,  46.83125
BLOK1 ZENDS  13.85100,  16.78788
BLOCK     1    1    1
MEDIA          2,    3,    5,    6,    4
SURFACES       1,    2,    3,    4
SECTOR -1  0  0  0
SECTOR  1 -1  0  0
SECTOR  0  1 -1  0
SECTOR  0  0  1 -1
SECTOR  0  0  0  1
ZONE      2    1    3
```

TABLE 6.3.1-3 (Cont-47/50)
STEEL BASKET MODEL FOR
KENO GENERALIZED GEOMETRY

```
BLOK1 XENDS  -4.52438,  -4.04813,   4.04813,   4.52438
BLOK1 YENDS -46.83125, -18.50493,  -5.08000
BLOK1 ZENDS  13.85100,  16.78788
BLOCK     1    1    1
MEDIA            2,    3,    5,    6,    4
SURFACES         1,    2,    3,    4
SECTOR -1  0  0  0
SECTOR  1 -1  0  0
SECTOR  0  1 -1  0
SECTOR  0  0  1 -1
SECTOR  0  0  0  1
BLOCK     2    1    1
MEDIA            2,    3,    5,    6,    4
SURFACES         1,    2,    3,    4
SECTOR -1  0  0  0
SECTOR  1 -1  0  0
SECTOR  0  1 -1  0
SECTOR  0  0  1 -1
SECTOR  0  0  0  1
BLOCK     3    1    1
MEDIA            2,    3,    5,    6,    4
SURFACES         1,    2,    3,    4
SECTOR -1  0  0  0
SECTOR  1 -1  0  0
SECTOR  0  1 -1  0
SECTOR  0  0  1 -1
SECTOR  0  0  0  1
BLOCK     1    2    1
MEDIA            3
BLOCK     2    2    1
MEDIA            2
BLOCK     3    2    1
MEDIA            3
ZONE      2    3    3
BLOK1 XENDS  -4.52438,  -4.04813,   4.04813,   4.52438
BLOK1 YENDS   5.08000,  18.50493,  46.83125
BLOK1 ZENDS  13.85100,  16.78788
BLOCK     1    2    1
MEDIA            2,    3,    5,    6,    4
SURFACES         1,    2,    3,    4
SECTOR -1  0  0  0
SECTOR  1 -1  0  0
SECTOR  0  1 -1  0
SECTOR  0  0  1 -1
SECTOR  0  0  0  1
BLOCK     2    2    1
MEDIA            2,    3,    5,    6,    4
SURFACES         1,    2,    3,    4
SECTOR -1  0  0  0
SECTOR  1 -1  0  0
SECTOR  0  1 -1  0
SECTOR  0  0  1 -1
SECTOR  0  0  0  1
BLOCK     3    2    1
MEDIA            2,    3,    5,    6,    4
SURFACES         1,    2,    3,    4
```

TABLE 6.3.1-3 (Cont-48/50)
STEEL BASKET MODEL FOR
KENO GENERALIZED GEOMETRY

```
SECTOR -1  0  0  0
SECTOR  1 -1  0  0
SECTOR  0  1 -1  0
SECTOR  0  0  1 -1
SECTOR  0  0  0  1
BLOCK     1    1    1
MEDIA            3
BLOCK     2    1    1
MEDIA            2
BLOCK     3    1    1
MEDIA            3
ZONE      1    2    3
BLOK1 XENDS -46.83125, -18.36018,  -9.52500,  -8.89000,  -4.52438
BLOK1 YENDS  -5.08000,  -4.60375,   4.60375,   5.08000
BLOK1 ZENDS  13.85100,  16.78788
BLOCK     1    1    1
MEDIA            2,    3,    5,    6,    4
SURFACES         1,    2,    3,    4
SECTOR -1  0  0  0
SECTOR  1 -1  0  0
SECTOR  0  1 -1  0
SECTOR  0  0  1 -1
SECTOR  0  0  0  1
BLOCK     1    2    1
MEDIA            2,    3,    5,    6,    4
SURFACES         1,    2,    3,    4
SECTOR -1  0  0  0
SECTOR  1 -1  0  0
SECTOR  0  1 -1  0
SECTOR  0  0  1 -1
SECTOR  0  0  0  1
BLOCK     1    3    1
MEDIA            2,    3,    5,    6,    4
SURFACES         1,    2,    3,    4
SECTOR -1  0  0  0
SECTOR  1 -1  0  0
SECTOR  0  1 -1  0
SECTOR  0  0  1 -1
SECTOR  0  0  0  1
BLOCK     2    1    1
MEDIA            3
BLOCK     2    2    1
MEDIA            2
BLOCK     2    3    1
MEDIA            3
BLOCK     3    1    1
MEDIA            3
BLOCK     3    2    1
MEDIA            3
BLOCK     3    3    1
MEDIA            3
BLOCK     4    1    1
MEDIA            3
BLOCK     4    2    1
MEDIA            2
BLOCK     4    3    1
```

TABLE 6.3.1-3 (Cont-49/50)
STEEL BASKET MODEL FOR
KENO GENERALIZED GEOMETRY

```
MEDIA          3
ZONE     3     2     3
BLOK1 XENDS   4.52438,   8.89000,   9.52500,  18.36018,  46.83125
BLOK1 YENDS  -5.08000,  -4.60375,   4.60375,   5.08000
BLOK1 ZENDS  13.85100,  16.78788
BLOCK    4     1     1
MEDIA          2,    3,    5,    6,    4
SURFACES       1,    2,    3,    4
SECTOR -1  0  0  0
SECTOR  1 -1  0  0
SECTOR  0  1 -1  0
SECTOR  0  0  1 -1
SECTOR  0  0  0  1
BLOCK    4     2     1
MEDIA          2,    3,    5,    6,    4
SURFACES       1,    2,    3,    4
SECTOR -1  0  0  0
SECTOR  1 -1  0  0
SECTOR  0  1 -1  0
SECTOR  0  0  1 -1
SECTOR  0  0  0  1
BLOCK    4     3     1
MEDIA          2,    3,    5,    6,    4
SURFACES       1,    2,    3,    4
SECTOR -1  0  0  0
SECTOR  1 -1  0  0
SECTOR  0  1 -1  0
SECTOR  0  0  1 -1
SECTOR  0  0  0  1
BLOCK    3     1     1
MEDIA          3
BLOCK    3     2     1
MEDIA          2
BLOCK    3     3     1
MEDIA          3
BLOCK    2     1     1
MEDIA          3
BLOCK    2     2     1
MEDIA          3
BLOCK    2     3     1
MEDIA          3
BLOCK    1     1     1
MEDIA          3
BLOCK    1     2     1
MEDIA          2
BLOCK    1     3     1
MEDIA          3
ZONE     2     2     3
BLOK1 XENDS  -4.52438,  -0.31750,   0.31750,   4.52438
BLOK1 YENDS  -5.08000,  -4.60375,   4.60375,   5.08000
BLOK1 ZENDS  13.85100,  16.78788
BLOCK    1     1     1
MEDIA          3
BLOCK    1     2     1
MEDIA          2
BLOCK    1     3     1
```

TABLE 6.3.1-3 (Cont-50/50)
STEEL BASKET MODEL FOR
KENO GENERALIZED GEOMETRY

```
MEDIA          3
BLOCK    3     1     1
MEDIA          3
BLOCK    3     2     1
MEDIA          2
BLOCK    3     3     1
MEDIA          3
BLOCK    2     1     1
MEDIA          3
BLOCK    2     2     1
MEDIA          3
BLOCK    2     3     1
MEDIA          3
    4
1.0      XSQ   1.0      YSQ   -362.9025     $
1.0      XSQ   1.0      YSQ   -387.4992     $
1.0      XSQ   1.0      YSQ   -2104.860     $
1.0      XSQ   1.0      YSQ   -2193.166     $
```

TABLE 6.3.1-4
GENERALIZED GEOMETRY INPUT CHANGES
TO MOVE FUEL ELEMENTS OUT TO THE LEAD

```
ZONE      2    1    2
BLOK1 YENDS -46.83125, -18.50493, -18.50490, -18.25852, -18.09342,
 -17.94610, -10.77822, -10.63090, -10.46580, -10.21180, -5.08000

ZONE      2    3    2
BLOK1 YENDS   5.08000,  10.21180,  10.46580,  10.63090,  10.77822,
  17.94610,  18.09342,  18.25852,  18.50490,  18.50493,  46.83125

ZONE      1    2    2
BLOK1 XENDS -46.83125, -18.36018, -18.36010, -17.88258, -17.61715,
 -11.48305, -11.21762, -10.74010,  -9.52500,  -8.89000,  -7.93750,
  -7.45998,  -7.19455,  -4.52438

ZONE      3    2    2
BLOK1 XENDS   4.52438,   7.19455,   7.45998,   7.93750,   8.89000,
    9.52500,  10.74010,  11.21762,  11.48305,  17.61715,  17.88258,
   18.36010,  18.36018,  46.83125
```

TABLE 6.3.1-5
KEFF NBS FUEL MODEL 2X2 ARRAY OF SINGLE CELLS DISCRETE FWR

```
$$ASIS,ROUT(BL),T(:,8,16),KEYW(WRL)
$:IDENT:VXXX,WRL,VVV18,X4447
$:USERID:FS9911$XXX
$:NEED:P1
$:SELECT:CDCJOB
JOBNM,STMFZ,SN,T4444.
CHARGE.
ATTACH(LLOYD,PROCLIB,ID=SCALE)
LIBRARY(LLOYD)
SCALE,CSAS2.
EXIT.
***EOS
KEFF NBS FUEL MODEL 2X2 ARRAY OF SINGLE CELLS DISCRETE FWR
27GROUPNDF4  9  9  3  LATTICECELL  0  0
U-235  1 0. 0.003056845 END
AL  2 1. END
H2O  3 1. END
AL  4 1. END
H2O  5 8.8-5 END
SS304  6 1. END
H2O  7 1. END
PB  8 1. END
CARBONSTEEL  9 1. END
SYMMSLABCELL      0.43603 0.0508 1 3 0.127 2 END
KEFF NBS FUEL MODEL 2X2 ARRAY OF SINGLE CELLS DISCRETE FWR
15.0 100 300 3 2 2 2 3 0
BOX TYPE  1
CUBOID  1   3.0670  -3.0670    .0254   -.0254  13.8510 -13.8510 -0.5
CUBOID  2   3.0670  -3.0670    .0635   -.0635  13.8510 -13.8510 -0.5
CUBOID  3   3.0670  -3.0670    .3581   -.3581  13.8510 -13.8510 -0.5
CUBOID  2   3.0670  -3.0670    .3962   -.3962  13.8510 -13.8510 -0.5
CUBOID  1   3.0670  -3.0670    .4470   -.4470  13.8510 -13.8510 -0.5
CUBOID  2   3.0670  -3.0670    .4851   -.4851  13.8510 -13.8510 -0.5
CUBOID  3   3.0670  -3.0670    .7797   -.7797  13.8510 -13.8510 -0.5
CUBOID  2   3.0670  -3.0670    .8178   -.8178  13.8510 -13.8510 -0.5
CUBOID  1   3.0670  -3.0670    .8686   -.8686  13.8510 -13.8510 -0.5
CUBOID  2   3.0670  -3.0670    .9067   -.9067  13.8510 -13.8510 -0.5
CUBOID  3   3.0670  -3.0670   1.2013  -1.2013  13.8510 -13.8510 -0.5
CUBOID  2   3.0670  -3.0670   1.2394  -1.2394  13.8510 -13.8510 -0.5
CUBOID  1   3.0670  -3.0670   1.2902  -1.2902  13.8510 -13.8510 -0.5
CUBOID  2   3.0670  -3.0670   1.3283  -1.3283  13.8510 -13.8510 -0.5
CUBOID  3   3.0670  -3.0670   1.6229  -1.6229  13.8510 -13.8510 -0.5
CUBOID  2   3.0670  -3.0670   1.6610  -1.6610  13.8510 -13.8510 -0.5
CUBOID  1   3.0670  -3.0670   1.7118  -1.7118  13.8510 -13.8510 -0.5
CUBOID  2   3.0670  -3.0670   1.7499  -1.7499  13.8510 -13.8510 -0.5
CUBOID  3   3.0670  -3.0670   2.0445  -2.0445  13.8510 -13.8510 -0.5
CUBOID  2   3.0670  -3.0670   2.0826  -2.0826  13.8510 -13.8510 -0.5
CUBOID  1   3.0670  -3.0670   2.1334  -2.1334  13.8510 -13.8510 -0.5
CUBOID  2   3.0670  -3.0670   2.1715  -2.1715  13.8510 -13.8510 -0.5
CUBOID  3   3.0670  -3.0670   2.4661  -2.4661  13.8510 -13.8510 -0.5
CUBOID  2   3.0670  -3.0670   2.5042  -2.5042  13.8510 -13.8510 -0.5
CUBOID  1   3.0670  -3.0670   2.5550  -2.5550  13.8510 -13.8510 -0.5
CUBOID  2   3.0670  -3.0670   2.5931  -2.5931  13.8510 -13.8510 -0.5
CUBOID  3   3.0670  -3.0670   2.8877  -2.8877  13.8510 -13.8510 -0.5
CUBOID  2   3.0670  -3.0670   2.9258  -2.9258  13.8510 -13.8510 -0.5
CUBOID  1   3.0670  -3.0670   2.9766  -2.9766  13.8510 -13.8510 -0.5
CUBOID  2   3.0670  -3.0670   3.0147  -3.0147  13.8510 -13.8510 -0.5
```

TABLE 6.3.1-5
KEFF NBS FUEL MODEL 2X2 ARRAY OF SINGLE CELLS DISCRETE FWR

```
CUBOID  3   3.0670  -3.0670   3.3093  -3.3093  13.8510 -13.8510 -0.5
CUBOID  2   3.0670  -3.0670   3.3474  -3.3474  13.8510 -13.8510 -0.5
CUBOID  1   3.0670  -3.0670   3.3982  -3.3982  13.8510 -13.8510 -0.5
CUBOID  2   3.0670  -3.0670   3.4363  -3.4363  13.8510 -13.8510 -0.5
CUBOID  3   3.0670  -3.0670   3.7309  -3.7309  13.8510 -13.8510 -0.5
CUBOID  3   3.3325  -3.3325   3.7313  -3.7313  13.8510 -13.8510 -0.5
CUBOID  2   3.3325  -3.3325   3.8964  -3.8964  13.8510 -13.8510 -0.5
CUBOID  3   3.3325  -3.3325   4.1428  -4.1504  13.8510 -13.8510 -0.5
CUBOID  2   3.8100  -3.8100   4.1428  -4.1504  13.8510 -13.8510 -0.5
BOX TYPE  2
CUBOID  3   3.3325  -3.3325   4.1428  -4.1504  2.9380 -0. -0.5
CUBOID  2   3.8100  -3.8100   4.1428  -4.1504  2.9380 -0. -0.5
ARRAY BDY  3 7.62 -7.62 8.2932 -8.2932 16.789 -16.789 -0.5
CUBOID  3 38.1 -38.1 38.7732 -38.7732 47.269 -47.269 -0.5
END GEOMETRY
1 1 2 1 1 2 1 1 3 1 0 2 1 2 1 1 2 1 1 3 2 9
END KENO
***EOI
$:ENDJOB
```

TABLE 6.3.1-6
KEFF NBS FUEL MODEL 2X2 ARRAY OF SINGLE CELLS GEN GEOM FWR

```
$$ASIS,ROUT(BL),T(:,8,16),KEYW(WRL)
$:IDENT:VXXX,WRL,VVV18,X4447
$:USERID:FS9911$XXX
$:NEED:P1
$:SELECT:CDCJOB
JOBNM,STMFZ,SN,T4444.
CHARGE.
STAGE,TAPE4,PE,PRE,VSN=018643.
ATTACH(LLOYD,PROCLIB,ID=SCALE)
LIBRARY(LLOYD)
KENO.
EXIT.
***EOS
KEFF NBS FUEL MODEL 2X2 ARRAY OF SINGLE CELLS GEN GEOM FWR
15. 100 300 3 27 27 16 10 20 9 2 2 2 3 -16 0 0 2000 00 6 1 1 0 0 104 00 0 0
          1     -92235   3.05685E-03      10     -92235   3.68295E-04
          2      13027   6.02383E-02      10      13027   1.08864E-02
          3       1001   6.67555E-02      10       1001   4.66484E-02
          3       8016   3.33777E-02      10       8016   2.33242E-02
          4          3   6.02383E-02
          5          5   5.87448E-06       5          8   2.93724E-06
          6      24304   1.74239E-02       6      25055   1.73634E-03
          6      26304   5.93526E-02       6      28304   7.72036E-03
          7          6   6.67555E-02       7          9   3.33777E-02
          8      82000   3.29882E-02
          9       6012   3.92145E-03       9      26000   8.34952E-02
 BOX TYPE  1
 GENERAL  10 6*0. 27*0.5
 CUBOID  3   3.3325  -3.3325   3.7313  -3.7313  13.8510 -13.8510 27*0.5
 CUBOID  2   3.3325  -3.3325   3.8964  -3.8964  13.8510 -13.8510 27*0.5
 CUBOID  3   3.3325  -3.3325   4.1428  -4.1504  13.8510 -13.8510 27*0.5
 CUBOID  2   3.8100  -3.8100   4.1428  -4.1504  13.8510 -13.8510 27*0.5
 BOX TYPE  2
 CUBOID  3   3.3325  -3.3325   4.1428  -4.1504   2.9380 -0. 27*0.5
 CUBOID  2   3.8100  -3.8100   4.1428  -4.1504   2.9380 -0. 27*0.5
 CORE BDY  3 7.62 -7.62 8.2932 -8.2932 16.789 -16.789 27*0.5
 CUBOID  3 38.1 -38.1 38.7732 -38.7732 47.269 -47.269 27*0.5
 1 1 2 1 1 2 1 1 3 1 0 2 1 2 1 1 2 1 1 3 2 9
    2
 ZONE1 XENDS  -3.06700,  3.06700
 ZONE1 YENDS  -3.58400,  3.58400
 ZONE1 YENDS -13.85100, 13.85100
 ZONE      1    1    1
 BLOK1 XENDS  -3.06700,  3.06700
 BLOK1 YENDS  -3.58400,  3.58400
 BLOK1 YENDS -13.85100, 13.85100
 BLOCK     1    1    1
 MEDIA           1
    0
 75 1 1 2 0. 0. 0. 150 2 1 2 0. 0. 0. 225 1 2 1 0. 0. 0. 300 2 2 2 0. 0. 0.
 END KENO
 ***EOI
 $:ENDJOB
```

TABLE 6.4-1
KEFF NBS FUEL SHPNG ARRY FWR HOMO FUEL GEN GEOM 1. 2 CSK

MIXTURE	NUCLIDE	DENSITY	MIXTURE	NUCLIDE	DENSITY
1	-92235	3.05685E-03	10	-92235	3.68295E-04
2	13027	6.02383E-02	10	13027	1.08864E-02
3	1001	6.67555E-02	10	1001	4.66484E-02
3	8016	3.33777E-02	10	8016	2.33242E-02
4	3	6.02383E-02			
5	5	5.87448E-06	5	8	2.93724E-06
6	24304	1.74239E-02	6	25055	1.73634E-03
6	26304	5.93526E-02	6	28304	7.72036E-03
7	6	6.67555E-02	7	9	3.33777E-02
8	82000	3.29882E-02			
9	6012	3.92145E-03	9	26000	8.34952E-02

```
CROSS SECTIONS READ FROM TAPE
NUCLIDE -      1001   H 1269 F, 1002 T 218 GP 032475(2)
NUCLIDE -         5   H 1269 F, 1002 T 218 GP 032475(2)
NUCLIDE -         6   H 1269 F, 1002 T 218 GP 032475(2)
NUCLIDE -      6012   C-12 1274F,1065T 218 GP 030476(7)
NUCLIDE -      8016   O-16 1276 218 GP 030476(7)
NUCLIDE -         8   O-16 1276 218 GP 030476(7)
NUCLIDE -         9   O-16 1276 218 GP 030476(7)
NUCLIDE -     13027   AL-27 1193 218 GP 040375(5)
NUCLIDE -         3   AL-27 1193 218 GP 040375(5)
NUCLIDE -     24304   CR 1191 WT SS-304(1/EST) P-3 293K SP=5+4(42375)'
NUCLIDE -     25055   MN-55 1197 SIGP=5+4 NEWXLACS 218NGP P-3 293K
NUCLIDE -     26000   FE 218GP RE 5-17-78(1)
NUCLIDE -     26304   FE 1192 WT SS-304(1/EST) P-3 293K SP=5+4(42375)'
NUCLIDE -     28304   NI 1190 WT SS-304(1/EST) P-3 293K SP=5+4(42375)'
NUCLIDE -     82000   PB   1288 218NGP 042375 P-3 293K
NUCLIDE -     92235   U-235 1261 SIGP=5+4 NEWXLACS 218NGP P-3 293K(3)

ARRAY DESCRIPTION
  2   2
  1   1
  1   1
  1   1
  1   1
  3   3
NO. OF INITIAL
 GENERATIONS      AVERAGE                          NUMBER OF
   SKIPPED      K-EFFECTIVE       DEVIATION       HISTORIES
     3            .89219    + OR -   .00460        30000
                                FREQUENCY FOR GENERATIONS     4 TO  103
 .7652 TO  .7883     *
 .7883 TO  .8114     ***
 .8114 TO  .8345     *******
 .8345 TO  .8576     ***********
 .8576 TO  .8806     *******************
 .8806 TO  .9037     ****************
 .9037 TO  .9268     *********************
 .9268 TO  .9499     ***********
 .9499 TO  .9730     **********
 .9730 TO  .9961
 .9961 TO 1.0192
1.0192 TO 1.0423     *
```

TABLE 6.4-2

KEFF NBS FUEL SHPNG ARRY FWR HOMO FUEL GEN GEOM 1. 2 CSK FUEL OUT

MIXTURE	NUCLIDE	DENSITY	MIXTURE	NUCLIDE	DENSITY
1	-92235	3.05685E-03	10	-92235	3.68295E-04
2	13027	6.02383E-02	10	13027	1.08864E-02
3	1001	6.67555E-02	10	1001	4.66484E-02
3	8016	3.33777E-02	10	8016	2.33242E-02
4	3	6.02383E-02			
5	5	5.87448E-06	5	8	2.93724E-06
6	24304	1.74239E-02	6	25055	1.73634E-03
6	26304	5.93526E-02	6	28304	7.72036E-03
7	6	6.67555E-02	7	9	3.33777E-02
8	82000	3.29882E-02			
9	6012	3.92145E-03	9	26000	8.34952E-02

```
CROSS SECTIONS READ FROM TAPE
NUCLIDE -        1001   H 1269 F, 1002 T 218 GP 032475(2)
NUCLIDE -           5   H 1269 F, 1002 T 218 GP 032475(2)
NUCLIDE -           6   H 1269 F, 1002 T 218 GP 032475(2)
NUCLIDE -        6012   C-12 1274F,1065T 218 GP 030476(7)
NUCLIDE -        8016   O-16 1276 218 GP 030476(7)
NUCLIDE -           8   O-16 1276 218 GP 030476(7)
NUCLIDE -           9   O-16 1276 218 GP 030476(7)
NUCLIDE -       13027   AL-27 1193 218 GP 040375(5)
NUCLIDE -           3   AL-27 1193 218 GP 040375(5)
NUCLIDE -       24304   CR 1191 WT SS-304(1/EST) P-3 293K SP=5+4(42375)'
NUCLIDE -       25055   MN-55 1197 SIGP=5+4 NEWXLACS 218NGP P-3 293K
NUCLIDE -       26000   FE 218GP RE 5-17-78(1)
NUCLIDE -       26304   FE 1192 WT SS-304(1/EST) P-3 293K SP=5+4(42375)'
NUCLIDE -       28304   NI 1190 WT SS-304(1/EST) P-3 293K SP=5+4(42375)'
NUCLIDE -       82000   PB   1288 218NGP 042375 P-3 293K
NUCLIDE -       92235   U-235 1261 SIGP=5+4 NEWXLACS 218NGP P-3 293K(3)
ARRAY DESCRIPTION
  2   2
  1   1
  1   1
  1   1
  1   1
  3   3
NO. OF INITIAL
 GENERATIONS        AVERAGE                          NUMBER
   SKIPPED        K-EFFECTIVE       DEVIATION      HISTORIES
      3             .83377    + OR -   .00538        30000
                                FREQUENCY FOR GENERATIONS    4 TO  103
 .7067 TO  .7298     **
 .7298 TO  .7529     *******
 .7529 TO  .7760     *****
 .7760 TO  .7991     ********
 .7991 TO  .8222     *******************
 .8222 TO  .8453     **********************
 .8453 TO  .8684     ****************
 .8684 TO  .8915     *******
 .8915 TO  .9146     *******
 .9146 TO  .9377     ****
 .9377 TO  .9608     ***
 .9608 TO  .9839     *
```

TABLE 6.4-3
KEFF NBS FUEL MODEL 2X2 ARRAY OF SINGLE CELLS DISCRETE FWR

MIXTURE	NUCLIDE	DENSITY	MIXTURE	NUCLIDE	DENSITY
1	-92235	3.05685E-03	10	-92235	3.56140E-04
2	13027	6.02383E-02	10	13027	1.05272E-02
3	1001	6.67555E-02	10	1001	4.73120E-02
3	8016	3.33777E-02	10	8016	2.36560E-02
4	3	6.02383E-02			
5	5	5.87448E-06	5	8	2.93724E-06
7	6	6.67555E-02	7	9	3.33777E-02
6	24304	1.74239E-02	6	25055	1.73634E-03
6	26304	5.93526E-02	6	28304	7.72036E-03
8	82000	3.29882E-02			
9	6012	3.92145E-03	9	26000	8.34952E-02

```
CROSS SECTIONS READ FROM TAPE
NUCLIDE -      1001   H 1269 F, 1002 T 218 GP 032475(2)
NUCLIDE -         5   H 1269 F, 1002 T 218 GP 032475(2)
NUCLIDE -         6   H 1269 F, 1002 T 218 GP 032475(2)
NUCLIDE -      6012   C-12 1274F,1065T 218 GP 030476(7)
NUCLIDE -      8016   O-16 1276 218 GP 030476(7)
NUCLIDE -         8   O-16 1276 218 GP 030476(7)
NUCLIDE -         9   O-16 1276 218 GP 030476(7)
NUCLIDE -     13027   AL-27 1193 218 GP 040375(5)
NUCLIDE -         3   AL-27 1193 218 GP 040375(5)
NUCLIDE -     24304   CR 1191 WT SS-304(1/EST) P-3 293K SP=5+4(42375)'
NUCLIDE -     25055   MN-55 1197 SIGP=5+4 NEWXLACS 218NGP P-3 293K
NUCLIDE -     26000   FE 218GP RE 5-17-78(1)
NUCLIDE -     26304   FE 1192 WT SS-304(1/EST) P-3 293K SP=5+4(42375)'
NUCLIDE -     28304   NI 1190 WT SS-304(1/EST) P-3 293K SP=5+4(42375)'
NUCLIDE -     82000   PB   1288 218NGP 042375 P-3 293K
NUCLIDE -     92235   U-235 1261 SIGP=5+4 NEWXLACS 218NGP P-3 293K(3)
ARRAY DESCRIPTION
  2   2
  2   2

  1   1
  1   1

  2   2
  2   2
NO. OF INITIAL
 GENERATIONS        AVERAGE                          NUMBER OF
   SKIPPED        K-EFFECTIVE       DEVIATION       HISTORIES
      3             .68854    + OR -   .00487        29100
                                FREQUENCY FOR GENERATIONS     4 TO  100

 .5846 TO  .6077     *
 .6077 TO  .6308     *********
 .6308 TO  .6539     **************
 .6539 TO  .6770     ******************
 .6770 TO  .7001     *****************
 .7001 TO  .7232     ****************
 .7232 TO  .7463     **********
 .7463 TO  .7694     ***
 .7694 TO  .7925     *******
 .7925 TO  .8156
 .8156 TO  .8386     *
```

TABLE 6.4-4
KEFF NBS FUEL MODEL 2X2 ARRAY OF SINGLE CELLS GEN GEOM FWR

MIXTURE	NUCLIDE	DENSITY	MIXTURE	NUCLIDE	DENSITY
1	-92235	3.05685E-03	10	-92235	3.68295E-04
2	13027	6.02383E-02	10	13027	1.08864E-02
3	1001	6.67555E-02	10	1001	4.66484E-02
3	8016	3.33777E-02	10	8016	2.33242E-02
4	3	6.02383E-02			
5	5	5.87448E-06	5	8	2.93724E-06
6	24304	1.74239E-02	6	25055	1.73634E-03
6	26304	5.93526E-02	6	28304	7.72036E-03
7	6	6.67555E-02	7	9	3.33777E-02
8	82000	3.29882E-02			
9	6012	3.92145E-03	9	26000	8.34952E-02

```
CROSS SECTIONS READ FROM TAPE
NUCLIDE -      1001   H 1269 F, 1002 T 218 GP 032475(2)
NUCLIDE -         5   H 1269 F, 1002 T 218 GP 032475(2)
NUCLIDE -         6   H 1269 F, 1002 T 218 GP 032475(2)
NUCLIDE -      6012   C-12 1274F,1065T 218 GP 030476(7)
NUCLIDE -      8016   O-16 1276 218 GP 030476(7)
NUCLIDE -         8   O-16 1276 218 GP 030476(7)
NUCLIDE -         9   O-16 1276 218 GP 030476(7)
NUCLIDE -     13027   AL-27 1193 218 GP 040375(5)
NUCLIDE -         3   AL-27 1193 218 GP 040375(5)
NUCLIDE -     24304   CR 1191 WT SS-304(1/EST) P-3 293K SP=5+4(42375)'
NUCLIDE -     25055   MN-55 1197 SIGP=5+4 NEWXLACS 218NGP P-3 293K
NUCLIDE -     26000   FE 218GP RE 5-17-78(1)
NUCLIDE -     26304   FE 1192 WT SS-304(1/EST) P-3 293K SP=5+4(42375)'
NUCLIDE -     28304   NI 1190 WT SS-304(1/EST) P-3 293K SP=5+4(42375)'
NUCLIDE -     82000   PB   1288 218NGP 042375 P-3 293K
NUCLIDE -     92235   U-235 1261 SIGP=5+4 NEWXLACS 218NGP P-3 293K(3)
ARRAY DESCRIPTION
  2   2
  2   2

  1   1
  1   1

  2   2
  2   2
NO. OF INITIAL
 GENERATIONS      AVERAGE                        NUMBER OF
   SKIPPED      K-EFFECTIVE      DEVIATION      HISTORIES
      3           .68696   + OR -  .00485        29100
                                FREQUENCY FOR GENERATIONS    4 TO  100

 .5599 TO  .5830     *
 .5830 TO  .6061     *****
 .6061 TO  .6292     *******
 .6292 TO  .6523     **********
 .6523 TO  .6754     ***********
 .6754 TO  .6985     **********************
 .6985 TO  .7216     ********************
 .7216 TO  .7447     ************
 .7447 TO  .7678     *******
 .7678 TO  .7909
 .7909 TO  .8140     ***
```

TABLE 6.5.1-1

Critical Experiments for
Computational Tool Evaluation

Experiment Name	References
A. TRX-1 & TRX-2 Low-Enriched Uranium Rods in Water	A.1. J. Hardy, Jr., D. Klein and J. J. Volpe; "A Study of Physics Parameters In Several Water-Moderated Lattices of Slightly Enriched and Natural Uranium", WAPD-TM-931; March, 1970.
	A.2. J. Hardy, Jr., D. Klein and J. J. Volpe; Nucl. Sci. Eng. 40, 101 (1970). J. J. Volpe, J. Hardy, Jr., and D. Klein, Nucl. Sci. Eng. 40, 116 (1970).
	A.3. J. Hardy, Jr., D. Klein and R. Dannels; Nucl. Sci. Eng. 26, 462 (1966).
	A.4. J. R. Brown et al., "Kinetics and Buckling Measurements In Lattices of Slightly Enriched U or UO_2 Rods In H_2O", WAPD-176 (January, 1958).
	A.5. R. Sher and S. Fiarman, "Studies of Thermal Reactor Benchmark Data Interpretation: Experimental Corrections", EPRI NP-209; October, 1976.
B. ORNL 1-4 & ORNL 10 Fully Enriched Uranium Spherical Solutions	B.1. R. Gwin and D. W. Magnuson, "Eta of U-233 and U-235 for Critical Experiments", Nuc. Sci. Eng. 12, 364 (1962).
	B.2. A. Staub et al., "Analysis of A Set of Critical Homogeneous U-H_2O Spheres", Nuc. Sci. Eng. 34, 263 (1968).

TABLE 6.5.1-1
(Continued)

Experiment Name	References
C. PNL 1-5 Plutonium Spherical Solutions	C.1. R. C. Lloyd et al., "Criticality Studies With Plutonium Solutions", Nuc. Sci. Eng. 25, 165 (1966).
	C.2. L. E. Hansen and E. D. Clayton, "Theory-Experiment Tests Using ENDF/B Version II Cross-Section Data", Trans. Amer. Nuc. Soc. 15, 309 (June, 1972).
	C.3. F. E. Kruesi et al., "Critical Mass Studies of Plutonium-Nitrate Solution", HW-24514 (1952).
D. Babcock & Wilcox Small Lattice Facility Low-Enriched UO_2 Rods in Water	D.1. M. N. Baldwin et al., "Physics Verification Program - Part III", BAW-3647-6, Babcock & Wilcox, 1970.
MO_2 Rods in Water	D.2. G. T. Fairburn et al., "Pu Lattice Experiments In Uniform Test Lattice of UO_2-1.5% PuO_2 Fuel", BAW-1357, Babcock & Wilcox; August, 1970.

TABLE 6.5.2-1 TRX-1

```
NEFF TRX-1 763 U METAL RODS 1.291W/D WAPD 176 JAN. 1958
ZZWXUPNDF4  7 10 4 LATTICECELL  0 0
U-235  1 0. 6.253-4 END
U-238  1 0. 0.047205 END
AL  2 0. 0.06025 END
N  3 0. 0.06676 END
O  3 0. 0.03338 END
H2O  4 8.0-5 END
N  5 0. 0.06676 END
O  5 0. 0.03338 END
FE  6 1. END
AL  7 0. 0.06025 END
TRIANGPITCH  1.006 0.983 1 3 1.1506 2 1.0084 4 END
NEFF TRX-1 763 U METAL RODS 1.291W/D WAPD 176 JAN. 1958
15.0 103 300 3 6 60 33 2 0
BOX TYPE  1
ZHEMICYL+X  7 0.5753 0. -15.24 -0.5
CUBOID  5 0.903 -0. 0.782 -0.782 0. -15.24 -0.5
CUBOID  500 0.903 -0. 0.782 -0.782 0. -76.20 -0.5
CUBOID  6 0.903 -0. 0.782 -0.782 5.08 -76.20 -0.5
BOX TYPE  2
ZHEMICYL-X  7 0.5753 0. -15.24 -0.5
CUBOID  5 0. -0.903 0.782 -0.782 0. -15.24 -0.5
CUBOID  500 0. -0.903 0.782 -0.782 0. -76.20 -0.5
CUBOID  6 0. -0.903 0.782 -0.782 5.08 -76.20 -0.5
BOX TYPE  3
ZHEMICYL+X  7 0.5753 20.32 -0. -0.5
CUBOID  5 0.903 -0. 0.782 -0.782 20.32 -0. -0.5
CUBOID  500 0.903 -0. 0.782 -0.782 81.28 -0. -0.5
CUBOID  6 0.903 -0. 0.782 -0.782 81.28 -1.27 -0.5
BOX TYPE  4
ZHEMICYL-X  7 0.5753 20.32 -0. -0.5
CUBOID  5 0. -0.903 0.782 -0.782 20.32 -0. -0.5
CUBOID  500 0. -0.903 0.782 -0.782 81.28 -0. -0.5
CUBOID  6 0. -0.903 0.782 -0.782 81.28 -1.27 -0.5
BOX TYPE  5
CUBOID  5 0.903 -0. 0.782 -0.782 0. -76.20 -0.5
CUBOID  6 0.903 -0. 0.782 -0.782 5.08 -76.20 -0.5
BOX TYPE  6
CUBOID  5 0.903 -0. 0.782 -0.782 81.28 -0. -0.5
CUBOID  6 0.903 -0. 0.782 -0.782 81.28 -1.27 -0.5
ARRAY BOX  5 27.090 -27.090 25.806 -25.806 81.915 -81.915 -0.5
CUBOID  5 57.090 -57.090 55.806 -55.806 81.915 -81.915 -0.5
```

TABLE 6.5.2-1 TRX-1 (CONTINUED)

```
DEFF TRX-1 763 U METAL RODS 1.291U/D WAT'D 176 JAN. 1958
END GEOMETRY
 5  1 60 1  1 33 1 2 2 1 0 6  1 60 1  1 33 1 1 1 1 0 2 24 38 2  1 33 2 2 2 1 0
 1 25 39 2  1 33 2 2 2 1 0 2 17 43 2  2 32 2 2 2 1 0 1 18 44 2  2 32 2 2 2 1 0
 2 14 46 2  3 31 2 2 2 1 0 1 15 47 2  3 31 2 2 2 1 0 2 13 47 2  4 30 2 2 2 1 0
 1 14 48 2  4 30 2 2 2 1 0 2 12 48 2  5 29 2 2 2 1 0 1 13 49 2  5 29 2 2 2 1 0
 2  9 51 2  6 28 2 2 2 1 0 1 10 52 2  6 28 2 2 2 1 0 2  8 52 2  7 27 2 2 2 1 0
 1  9 53 2  7 27 2 2 2 1 0 2  7 53 2  8 26 2 2 2 1 0 1  8 54 2  8 26 2 2 2 1 0
 2  6 54 2  9 25 2 2 2 1 0 1  7 55 2  9 25 2 2 2 1 0 2  5 55 2 10 24 2 2 2 1 0
 1  6 56 2 10 24 2 2 2 1 0 2  4 56 2 11 23 2 2 2 1 0 1  5 57 2 11 23 2 2 2 1 0
 2  3 57 2 12 22 2 2 2 1 0 1  4 58 2 12 22 2 2 2 1 0 2  2 58 2 13 21 2 2 2 1 0
 1  3 59 2 13 21 2 2 2 1 0 2  1 59 2 16 18 2 2 2 1 0 1  2 60 2 16 18 2 2 2 1 0
 4 24 38 2  1 33 2 1 1 1 0 3 25 39 2  1 33 2 1 1 1 0 4 17 43 2  2 32 2 1 1 1 0
 3 18 44 2  2 32 2 1 1 1 0 4 14 46 2  3 31 2 1 1 1 0 3 15 47 2  3 31 2 1 1 1 0
 4 13 47 2  4 30 2 1 1 1 0 3 14 48 2  4 30 2 1 1 1 0 4 12 48 2  5 29 2 1 1 1 0
 3 13 49 2  5 29 2 1 1 1 0 4  9 51 2  6 28 2 1 1 1 0 3 10 52 2  6 28 2 1 1 1 0
 4  8 52 2  7 27 2 1 1 1 0 3  9 53 2  7 27 2 1 1 1 0 4  7 53 2  8 26 2 1 1 1 0
 3  8 54 2  8 26 2 1 1 1 0 4  6 54 2  9 25 2 1 1 1 0 3  7 55 2  9 25 2 1 1 1 0
 4  5 55 2 10 24 2 1 1 1 0 3  6 56 2 10 24 2 1 1 1 0 4  4 56 2 11 23 2 1 1 1 0
 3  5 57 2 11 23 2 1 1 1 0 4  3 57 2 12 22 2 1 1 1 0 3  4 58 2 12 22 2 1 1 1 0
 4  2 58 2 13 21 2 1 1 1 0 3  3 59 2 13 21 2 1 1 1 0 4  1 59 2 16 18 2 1 1 1 0
 3  2 60 2 16 18 2 1 1 1 9
END GEOM
```

Document 30

TABLE 6.5.2-2 TRX-2

```
NEFF TRX-2 577 U METAL RODS 1.2910/0 WAPD 176 JAN. 1958
27GROUPNDF4  7 10 4 LATTICECELL  0 0
U-235  1 0. 6.253-4 END
U-238  1 0. 0.047205 END
AL  2 0. 0.06025 END
N  3 0. 0.06676 END
O  3 0. 0.03338 END
H2O  4 0.0-5 END
N  5 0. 0.06676 END
O  5 0. 0.03338 END
FE  6 1. END
AL  7 0. 0.06025 END
TRIANGPITCH  2.174 0.983 1 3 1.1506 2 1.0084 4 END
NEFF TRX-2 577 U METAL RODS 1.2910/0 WAPD 176 JAN. 1958
15.0 103 300 3 6 52 29 2 0
BOX TYPE  1
ZHEMICYL4X  7 0.5753 0. -15.24 -0.5
CUBOID  5  1.087 -0. 0.941 -0.941 0. -15.24 -0.5
CUBOID  500 1.087 -0. 0.941 -0.941 0. -76.20 -0.5
CUBOID  6 1.087 -0. 0.941 -0.941 5.08 -76.20 -0.5
BOX TYPE  2
ZHEMICYL-X  7 0.5753 0. -15.24 -0.5
CUBOID  5  0. -1.087 0.941 -0.941 0. -15.24 -0.5
CUBOID  500 0. -1.087 0.941 -0.941 0. -76.20 -0.5
CUBOID  6 0. -1.087 0.941 -0.941 5.08 -76.20 -0.5
BOX TYPE  3
ZHEMICYL4X  7 0.5753 20.32 -0. -0.5
CUBOID  5  1.087 -0. 0.941 -0.941 20.32 -0. -0.5
CUBOID  500 1.087 -0. 0.941 -0.941 81.28 -0. -0.5
CUBOID  6 1.087 -0. 0.941 -0.941 81.28 -1.27 -0.5
BOX TYPE  4
ZHEMICYL-X  7 0.5753 20.32 -0. -0.5
CUBOID  5  0. -1.087 0.941 -0.941 20.32 -0. -0.5
CUBOID  500 0. -1.087 0.941 -0.941 81.28 -0. -0.5
CUBOID  6 0. -1.087 0.941 -0.941 81.28 -1.27 -0.5
BOX TYPE  5
CUBOID  5 1.087 -0. 0.941 -0.941 0. -76.20 -0.5
CUBOID  6 1.087 -0. 0.941 -0.941 5.08 -76.20 -0.5
BOX TYPE  6
CUBOID  5 1.087 -0. 0.941 -0.941 81.28 -0. -0.5
CUBOID  6 1.087 -0. 0.941 -0.941 81.28 -1.27 -0.5
ARRAY BDY  5 28.262 -28.262 27.289 -27.289 81.915 -81.915 -0.5
CUBOID  5 58.262 -58.262 57.289 -57.289 81.915 -81.915 -0.5
END GEOMETRY
 5  1 52 1  1 29 1 2 2 1 0 6  1 52 1  1 29 1 1 1 1 0 2 22 32 2  1 29 2 2 2 1 0
 1 23 33 2  1 29 2 2 2 1 0 2 15 37 2  2 28 2 2 2 1 0 1 16 38 2  2 28 2 2 2 1 0
 2 12 40 2  3 27 2 2 2 1 0 1 13 41 2  3 27 2 2 2 1 0 2 11 41 2  4 26 2 2 2 1 0
 1 12 42 2  4 26 2 2 2 1 0 2 10 42 2  5 25 2 2 2 1 0 1 11 43 2  5 25 2 2 2 1 0
 2  7 45 2  6 24 2 2 2 1 0 1  8 46 2  6 24 2 2 2 1 0 2  6 46 2  7 23 2 2 2 1 0
 1  7 47 2  7 23 2 2 2 1 0 2  5 47 2  8 22 2 2 2 1 0 1  6 48 2  8 22 2 2 2 1 0
 2  4 48 2  9 21 2 2 2 1 0 1  5 49 2  9 21 2 2 2 1 0 2  3 49 2 10 20 2 2 2 1 0
 1  4 50 2 10 20 2 2 2 1 0 2  2 50 2 11 19 2 2 2 1 0 1  3 51 2 11 19 2 2 2 1 0
 2  1 51 2 14 16 2 2 2 1 0 1  2 52 2 14 16 2 2 2 1 0 4 22 32 2  1 29 2 1 1 1 0
 3 23 33 2  1 29 2 1 1 1 0 4 15 37 2  2 28 2 1 1 1 0 3 16 38 2  2 28 2 1 1 1 0
 4 12 40 2  3 27 2 1 1 1 0 3 13 41 2  3 27 2 1 1 1 0 4 11 41 2  4 26 2 1 1 1 0
 3 12 42 2  4 26 2 1 1 1 0 4 10 42 2  5 25 2 1 1 1 0 3 11 43 2  5 25 2 1 1 1 0
 4  7 45 2  6 24 2 1 1 1 0 3  8 46 2  6 24 2 1 1 1 0 4  6 46 2  7 23 2 1 1 1 0
 3  7 47 2  7 23 2 1 1 1 0 4  5 47 2  8 22 2 1 1 1 0 3  6 48 2  8 22 2 1 1 1
 4  4 48 2  9 21 2 1 1 1 0 3  5 49 2  9 21 2 1 1 1 0 4  3 49 2 10 20 2 1 1 1.
```

TABLE 6.5.2-3 BRXL-1 & BRXL-2

```
KEFF BRXL-1 NSE 34 263-274 (1968F) SCALE MODEL
27GROUPNDF4  1 7 1 INFHOMMEDIUM  1 0
U-235  1 0. 4.0066-5 END
U-238  1 0. 2.007-6 END
U-234  1 0. 5.38-7 END
U-236  1 0. 1.38-7 END
H  1 0. 1.069-4 END
O  1 0. 0.033736 END
N  1 0. 0.066226 END
 ISN=12 IIN=40 ICN=70 IUS=1 END
KEFF BRXL-1 NSE 34 263-274 (1968F) SCALE MODEL
15.0 103 300 3 0 0 0 0 0
SPHERE  1 34.5948 -0.5
END GEOMETRY
END KENO
KEFF BRXL-2 NSE 34 263-274 (1968F) SCALE MODEL
27GROUPNDF4  1 8 1 INFHOMMEDIUM  1 0
U-235  1 0. 5.6205-5 END
U-238  1 0. 3.28-6 END
U-234  1 0. 6.31-7 END
U-236  1 0. 1.63-7 END
H  1 0. 2.129-4 END
O  1 0. 0.0338 END
N  1 0. 0.066148 END
B-10  1 0. 1.0284-6 END
 ISN=12 IIN=40 ICN=70 IUS=1 END
KEFF BRXL-2 NSE 34 263-274 (1968F) SCALE MODEL
15.0 103 300 3 0 0 0 0 0
SPHERE  1 34.5948 -0.5
END GEOMETRY
END KENO
```

TABLE 6.5.2-4 PNL-1 & PNL-2

```
KEFF PNL-1 NSE 25 165 (1966)
27GROUPNDF4  1 5 1 INFHOMEDIUM  1 0
PU-239  1 0. 9.373-5 END
PU-240  1 0. 4.501-6 END
N  1 0. 6.216-4 END
O  1 0. 0.03456 END
N  1 0. 0.06563 END
 ISN=12 IIN=40 ICN=70 IUS=1 END
KEFF PNL-1 NSE 25 165 (1966)
15. 103 300 3 0 0 0 0 0
SPHERE  1 19.509 -0.5
END GEOMETRY
END KENO
KEFF PNL-2 NSE 25 165 (1966)
27GROUPNDF4  1 5 1 INFHOMEDIUM  1 0
PU-239  1 0. 4.141-4 END
PU-240  1 0. 1.98E-5 END
N  1 0. 4.720-3 END
O  1 0. 0.03977 END
N  1 0. 0.05416 END
 ISN=12 IIN=40 ICN=70 IUS=1 END
KEFF PNL-2 NSE 25 165 (1966)
15. 103 300 3 0 0 0 0 0
SPHERE  1 19.509 -0.5
END GEOMETRY
END KENO
```

TABLE 6.5.2-5 B&W UO2 & MO2 EXPERIMENTS

```
B&W UO2 EXP CELL  SCALE MODEL  ENDF5-IV LATTICE SELFSHLD
27GROUPNDF4  3 7 3  LATTICECELL    0 0
U      1  0.  4.472785-2  END
U-235  1  0.  5.570288-4  END
U-238  1  0.  2.180690-2  END
AL     2  0.  6.051481-2  END
N      3  0.  6.668320-2  END
B-10   3  0.  2.243000-5  END
O      3  0.  3.334160-2  END
SQUAREPITCH   1.6256 1.0434   1  3 1.2060 2 END
B&W UO2 EXP CELL  SCALE MODEL  ENDF5-IV LATTICE SELFSHLD
15.  103  300  3  4R1  1
4R1
CYLINDER  1  .521716  .0128  -.0128  -.5
CYLINDER  2  .603     .0126  -.0128  -.5
CUBOID    3  .0128  -.0128  .0128  -.0128  .0128  -.0128  -.5
END GEOMETRY
END KENO
```

```
B&W MUO2 EXPERIMENT  SCALE MODEL  LATTICECELL SELFSHIELDIN
27GROUPNDF4  3 12  3 LATTICECELL    0 0
O          1  0.  4.358350-2  END
U-235      1  0.  1.543510-4  END
U-238      1  0.  2.131198-2  END
PU-239     1  0.  2.646750-4  END
PU-240     1  0.  5.295900-5  END
PU-241     1  0.  5.271000-6  END
PU-242     1  0.  8.320000-7  END
AM-241     1  0.  1.616000-6  END
ZIRCALLOY  2  1.019225        END
N          3  0.  6.668320-2  END
B-10       3  0.  2.465000-5  END
O          3  0.  3.334160-2  END
SQUAREPITCH  1.09738  1.2751  1  3  1.0275  2  END
B&W MUO2 EXPERIMENT  SCALE MODEL LATTICE SLFSHLDING
10.  103  300  3  4R1  1
4R1
CYLINDER  1  .63754   .94869  -.94869                          -.5
CYLINDER  2  .71374   .94869  -.94869                          -.5
CUBOID    3  .94869  -.94869   .94869  -.94869  .94869  -.94869 -.5
END GEOMETRY
END KENO
```

TABLE 6.5.3-1

K-Effective Results
Computational Tool Evaluation

Name of Critical Experiment	Feature	SCALE Results K-eff ± 2 Sigma	SCALE Results No. of Neutron Histories
ORNL-1	Fully Enriched	1.0021 ± 0.0060	30,000
ORNL-2	U-235 Nitrate	0.9977 ± 0.0068	30,000
TRX-1	Low Enriched	0.9773 ± 0.0060	30,000
TRX-2	U-235 Rods	0.9820 ± 0.0060	30,000
PNL-1	Plutonium	1.0157 ± 0.0106	30,000
PNL-2	Nitrate (5Pu240)	1.0105 ± 0.0114	30,000
B&W	UO_2 Rod	0.9920*± 0.0046	30,000
B&W	MO_2 Rod	0.9972*± 0.0054	30,000

*k-infinity values

Comparative Criticality Calculations for Crushed and Whole NBSR Fuel Elements in a GE-700 Cask

Monte Carlo simulations have been performed to determine if NBSR fuel in a GE-700 Cask becomes more reactive upon being crushed. The code, MCNP[1], was used because it has been carefully validated for criticality calculations[2], and because it is well known and widely used. The cask, including the 304 stainless steel divider, and the fuel sections have been modelled, showing that k_{eff} decreases when fuel is crushed from one side.

The analysis assumes that the cask is fully loaded with 40 fresh fuel sections (7000 grams ^{235}U), flooded with water and surrounded with an additional 30 cm of water reflector. With the minimum expected vertical gaps between fuel sections, k_{eff} is 0.920 ± .002 for whole fuel (in good agreement with KENO-IV calculations performed by General Electric). The crushed elements have less water or no water between the fuel plates, and in every case examined, k_{eff} decreases as sections are crushed laterally and moved closer together.

Computational Model

MCNP has been used at NIST for a number of calculations since 1989, initially as part of the design work for the planned liquid hydrogen cold neutron source, and later for NBSR core calculations. The fuel elements and core lattice were modelled in detail to determine the neutron and gamma-ray heating of the cold source. Later, the reactivity effects of fission products and fuel burnup were added, and the geometry was further refined to include beam tubes, the thermal shield, etc. For end-of-cycle fuel masses, MCNP predicts k_{eff} to be 1.003 ± .002 with the shim arms and regulating rod withdrawn. This result is in excellent agreement with the observed behavior of the NBSR just before shutdown, providing a benchmark of the core and fuel models.

The cask and its interior are shown in figures 1 through 3. It is a cylindrical annulus with an interior cavity 38.1 cm in diameter and 136.8 cm tall. The cavity is lined with 0.635 cm of 304 stainless steel, which is surrounded with a 26.2-cm lead shield. The exterior of the cask is lined with approximately 1 cm of iron. Since the problem has symmetry, a reflecting plane is introduced to reduce the number of cells in the model and speed the calculations.

Figure 3 is a plan view of the interior cavity (empty) and stainless steel divider, which extends the full length of the cavity. The steel plates are 0.476-cm thick, except the three short pieces in the center, which are 0.635-cm thick. Type 304 stainless steel is modelled as 72% Fe, 2% Mn, 18% Cr, and 8% Ni, representing the lower limits of the alloying metals, which are all stronger neutron absorbers than iron.

The fuel sections are modelled exactly as they are in the NBSR core calculations mentioned earlier; each fuel plate is included explicitly. Fuel cells are filled with a lattice of 17 fuel plates, and solid aluminum plates at each end. To properly fill and position these cells, transformed coordinate systems are specified at the centers of the fuel cells. Figure 4 shows the locations of the whole fuel sections in their most reactive configuration (Geometry 1).

Details of a fuel section are shown in figure 5. The fuel meat is .0508 cm thick, 6.134 cm wide, and 27.70 cm long. Aluminum clad surrounds the fuel so the plates are 0.127 cm thick and 6.568 cm wide. A water-filled space of 0.3046 cm separates the plates. The aluminum plates extend in length at least 1.27 cm past the end of the fuel at one end (toward the reactor center plane), and at least 2.54 cm past the fuel at the other end, giving rise to a nominal minimum vertical gap of 3.8 cm between each fuel section, as they are stacked in four layers. These gaps are modelled as water-filled cells. Aluminum walls and end pieces complete the fuel elements, which are 7.522 cm wide by 8.193 cm thick. The fuel meat is 93% enriched uranium in an aluminum matrix, with a density of 3.97 g/cm^3, and the following mass fractions: ^{235}U - .30041; ^{238}U - .0298; Al - .66979. With 40 fuel sections, each with 17 plates, the total ^{235}U mass is 7000 grams.

Four additional fuel configurations were modelled, each containing fuel sections that were crushed laterally so as to push the fuel plates closer. For Geometries 2, 3, and 4, they are completely crushed, eliminating the water between the plates. Details of the crushed fuel sections are shown in figure 6. A crushed fuel section is still 7.522 cm wide, but only 3.014 cm thick. In the forth, (Geometry 5), the elements are partially crushed, so the water-filled spaces between plates are half their normal thickness; the elements are 5.2-cm thick.

The four additional geometries are:

<u>Geometry 2</u> - 12 fuel sections on one side crushed and each moved 2.5 cm closer to the others (figure 7).

<u>Geometry 3</u> - All 40 sections crushed, but not the steel divider. The 24 sections on the sides moved closer to the others (figure 8).

Geometry 4 - All 40 sections, and the steel divider crushed, and everything as close together as possible (figure 9.)

Geometry 5 - All 40 sections partially crushed, but not the divider. Outside sections moved toward the center (figure 10).

Results

MCNP criticality calculations are divided into cycles in which a specified number of fission neutrons are tracked until they either induce another fission or do something else. The locations of the fissions are stored in a SRCTP file, to be used in the next generation as the starting points. It is recommended several cycles be skipped before tallying any results. For each of the geometries, 125 cycles were completed with 1000 neutrons started per cycle, and the first 25 cycles skipped in the k_{eff} calculation. Old SRCTP files were also used for the first cycle in each case to speed convergence. The results are tabulated below:

GE-700 Cask k_{eff} Values

Geometry 1	.920 ± .002
Geometry 2	.860 ± .003
Geometry 3	.650 ± .003
Geometry 4	.520 ± .002
Geometry 5	.807 ± .002

The Geometry 1 result can be compared with KENO calculations performed by General Electric in 1986. They reported[3] k_{eff} = .892 ± .0046, assuming 5.8-cm vertical gaps, and a peak value of .928 at 2 sigma when biased upward by a factor of 2.3% to account for homogenized fuel. The MCNP 2 sigma peak value is .924. For Geometry 1, MCNP predicts k_{eff} = .873 with 6.5-cm gaps, consistent with GE results.

Conclusion

The results above for Geometries 2-5 show without a doubt that if NBSR fuel sections are crushed laterally inside the GE-700 Cask, the entire system becomes less reactive and is very far subcritical. In fact, calculations have shown that even without the stainless steel divider, crushed NBSR elements are still subcritical.

References

1. J. F. Briesmeister, Editor, "MCNP - A General Purpose Monte Carlo Code for Neutron and Photon Transport," LA-7396-M, Rev. 2 (September 1986).

2. John C. Wagner, James E. Sisolak, and Gregg W. McKinney, "MCNP: Criticality Benchmark Problems," LA-12415 (October 1992).

3. G. E. Cunningham, Private Communication to the Transportation Certification Branch, Office of Nuclear Material Safety and Safeguards, Nuclear Regulatory Commission, Certificate of Compliance No. 5942 (February 28, 1986).

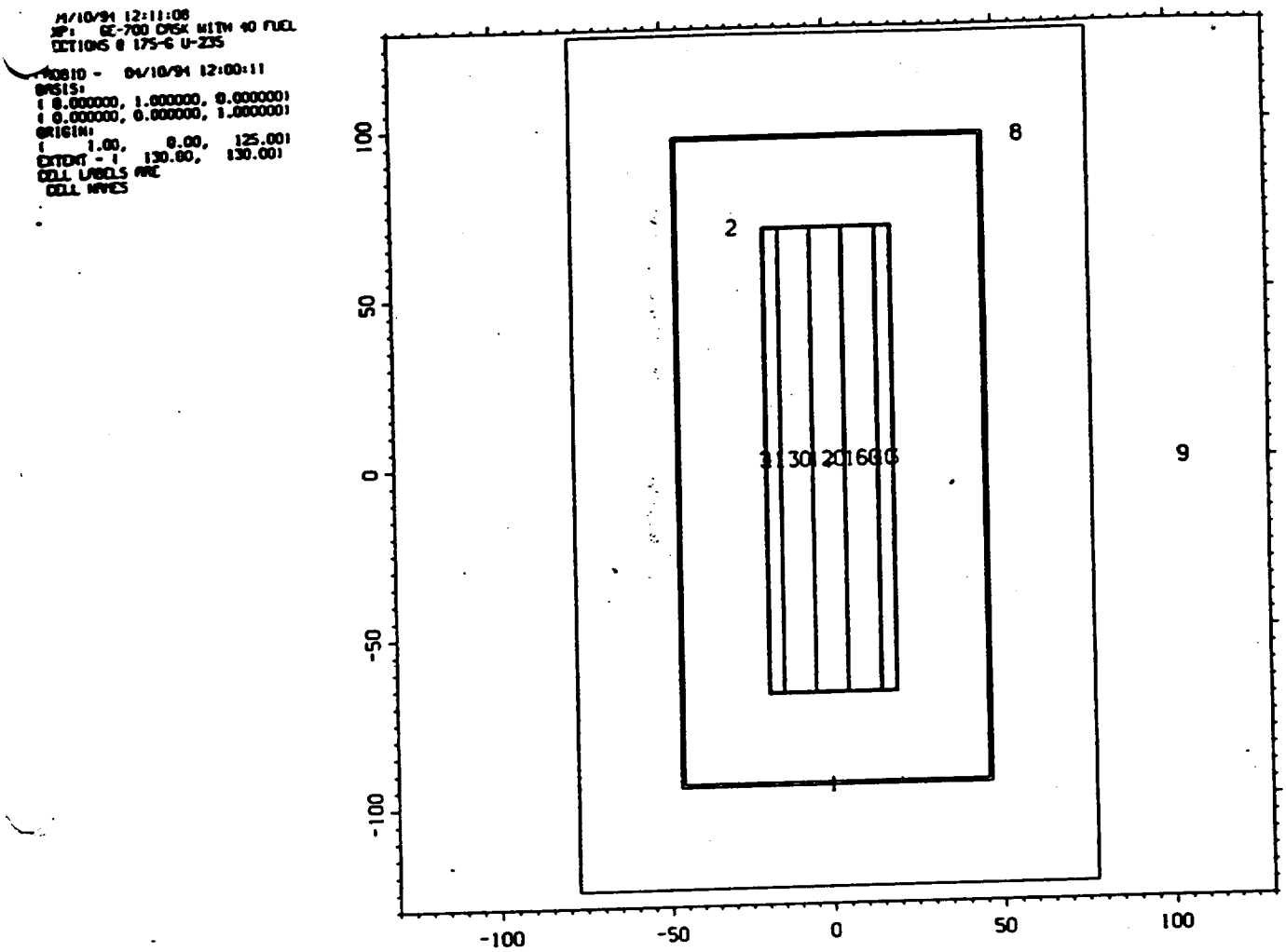

Figure 1. Side view of the empty GE-700 Cask, showing the water reflector (cell 8), outside iron liner (1), and lead wall (2). The interior is shown in subsequent figures.

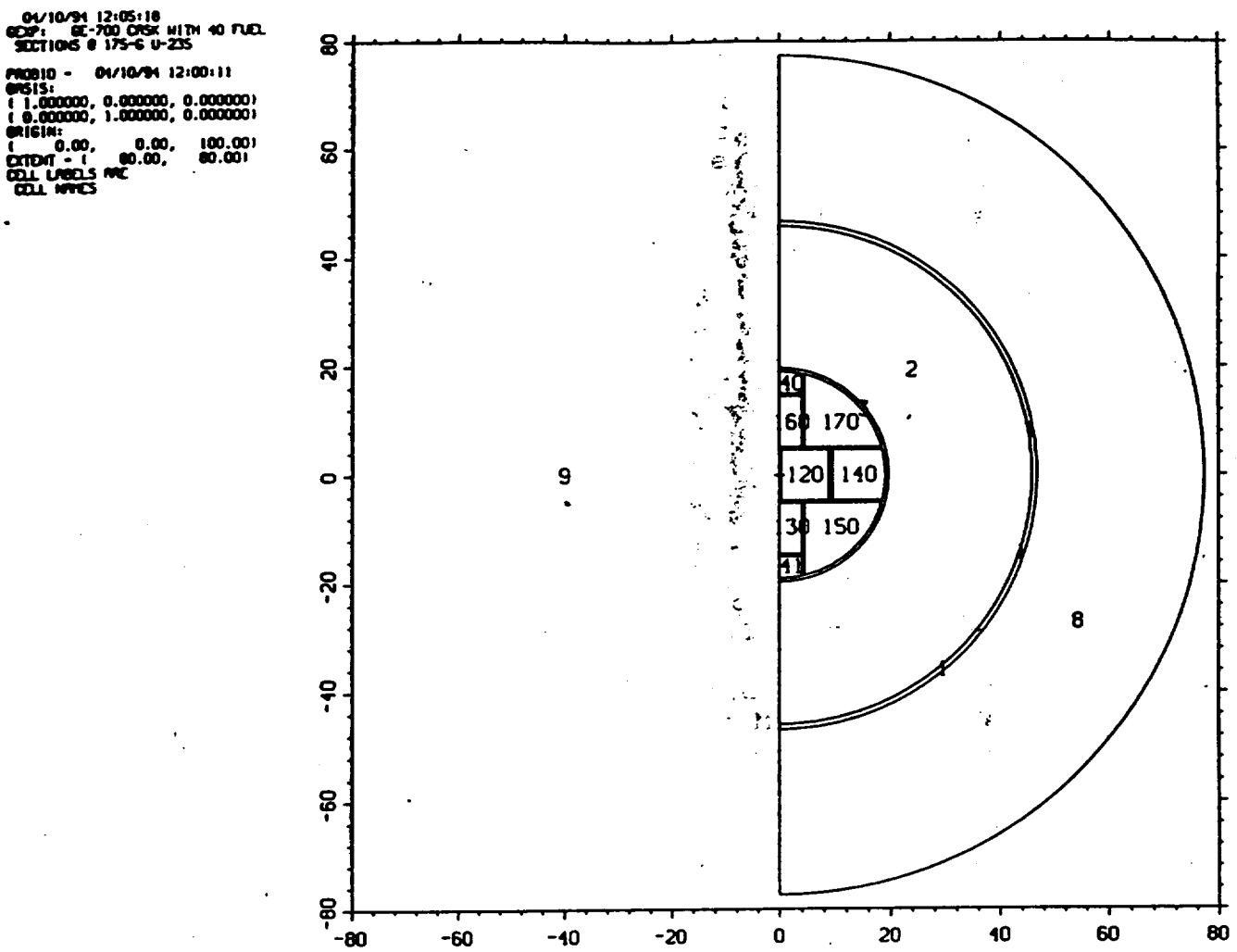

Figure 2. Plan view of the empty GE-700 Cask. The interior volume is subdivided by a stainless steel basket. Since there is symmetry about x=0, only half of the cask is modelled.

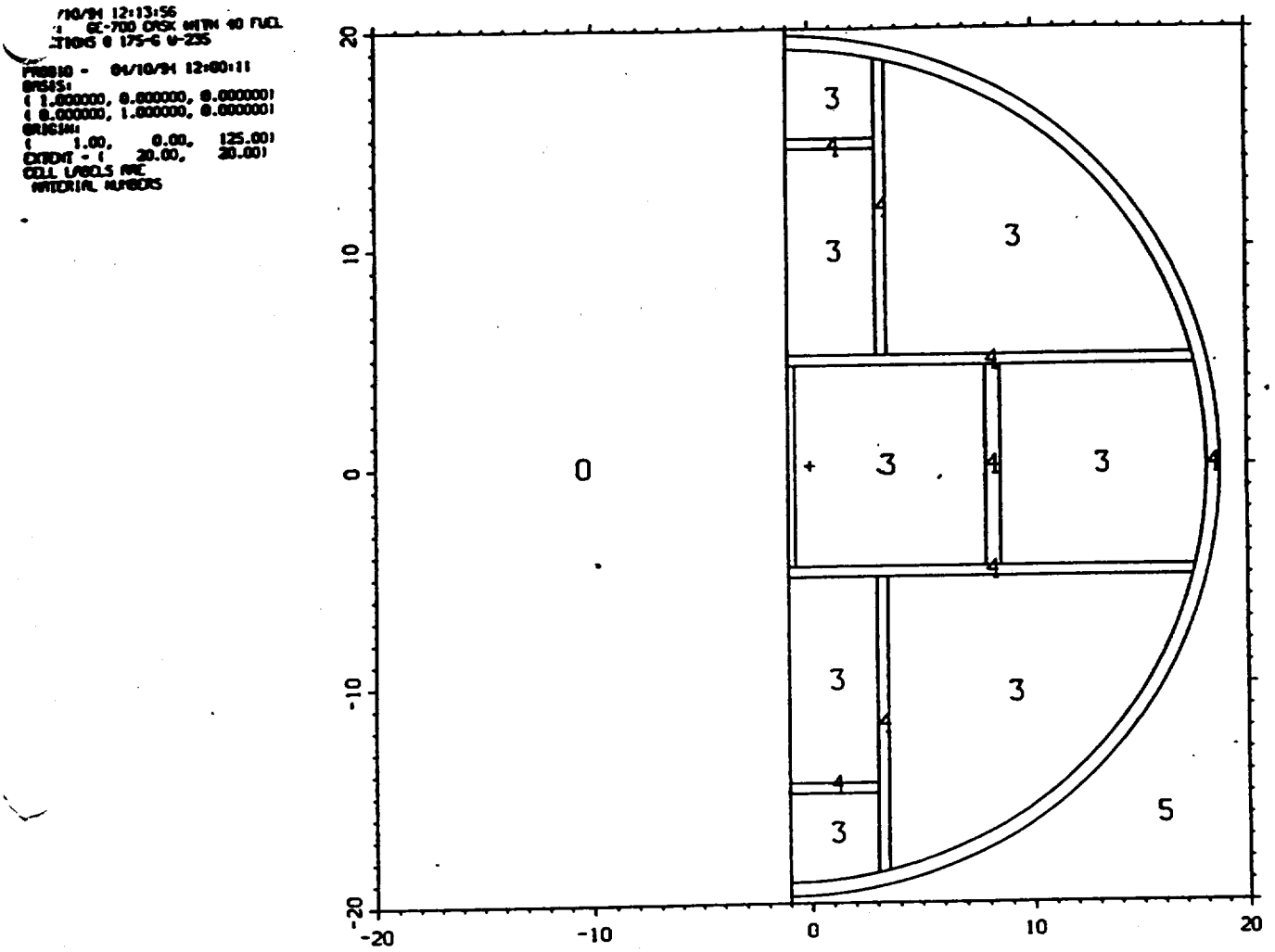

Figure 3. Interior of the GE-700 Cask. Cell labels are material numbers: 3 - water; 4 - stainless steel; 5 - lead.

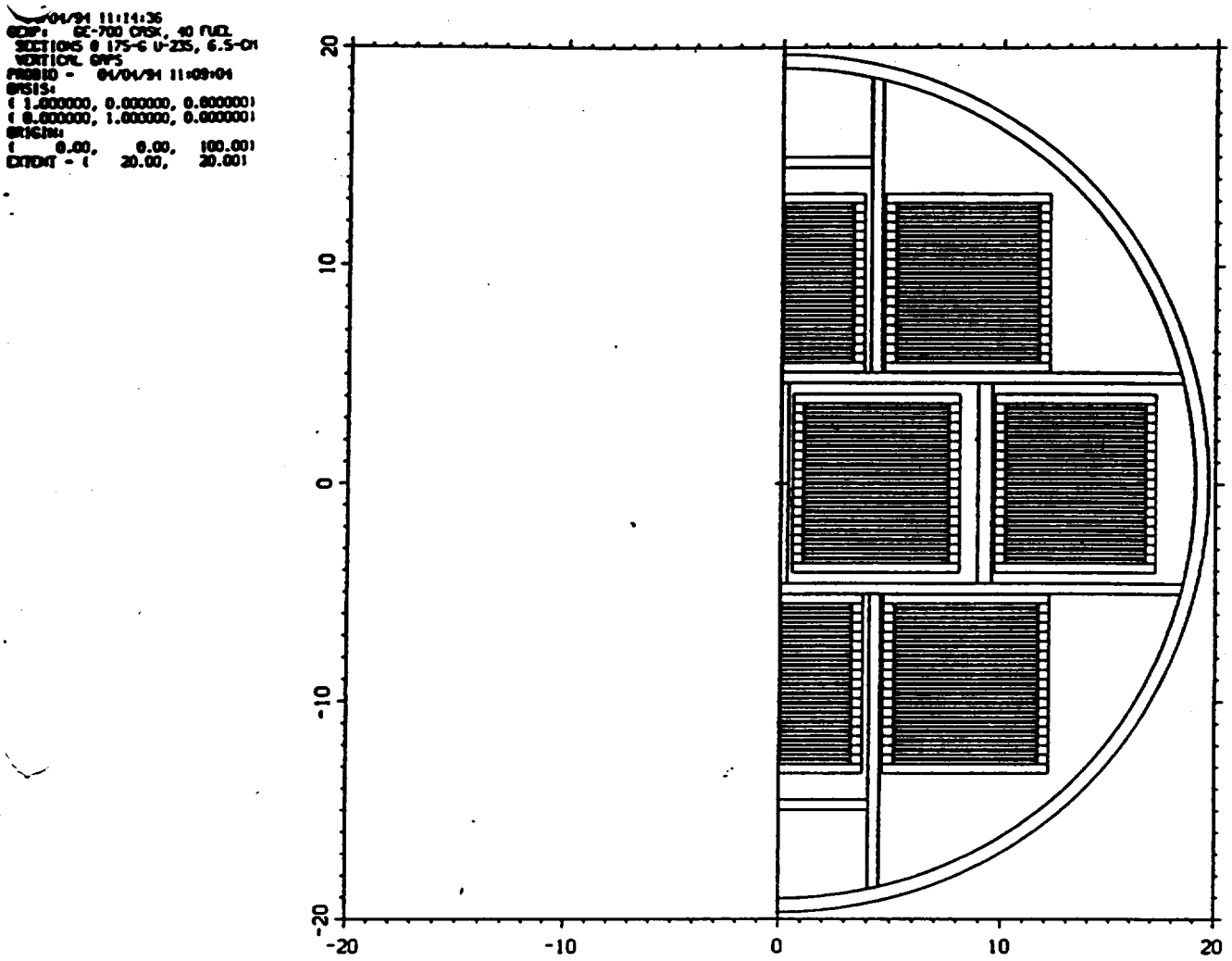

Figure 4. Whole NBSR fuel sections in the GE-700 Cask. Fuel is positioned as close as possible to the vertical axis of the cask. For vertical gaps of 3.8 cm separating the sections, k_{eff} = .920. (Geometry 1)

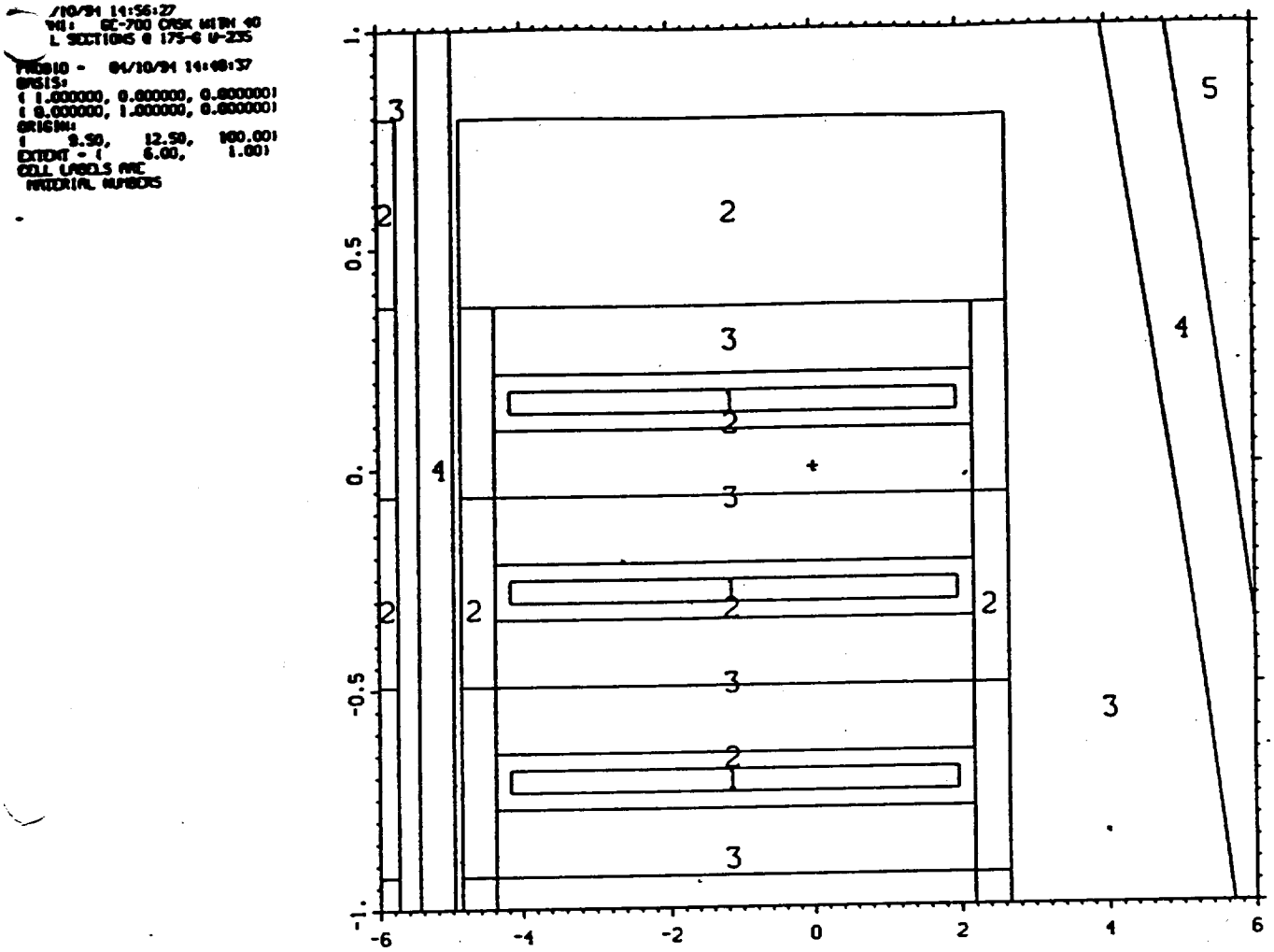

Figure 5. Details of the whole NBSR fuel section, the center of which is at (x,y) = (9.4,9.4). Note the vertical axis is elongated a factor of six. Cell labels are material numbers: 1 - fuel meat; 2 - aluminum; 3 - water; 4 - stainless steel; 5 - lead.

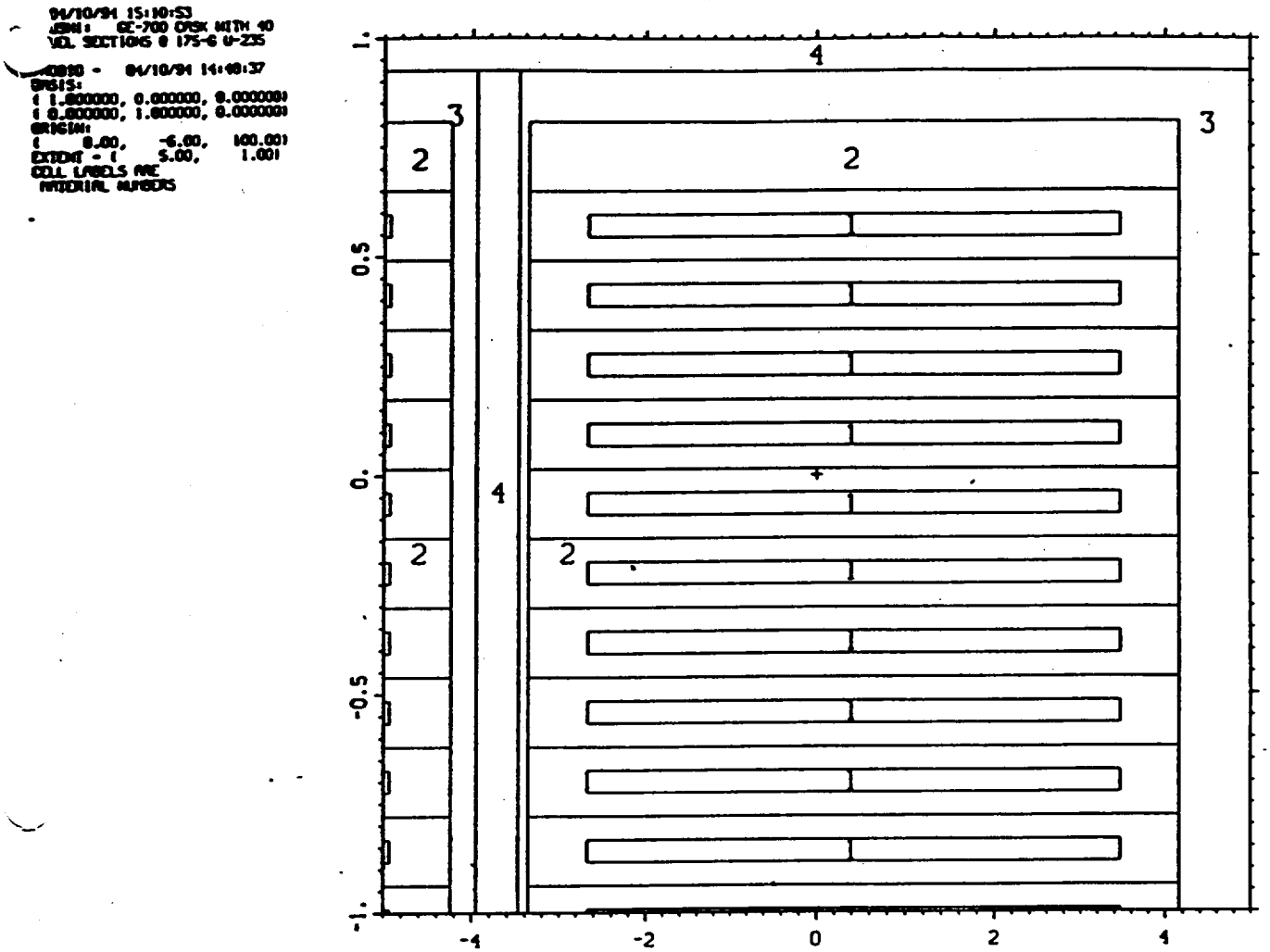

Figure 6. Details of a laterally crushed fuel section. Axis scales and material numbers are the same as figure 5. There is no water between the plates. The amounts of fuel and aluminum are the same as the whole fuel elements.

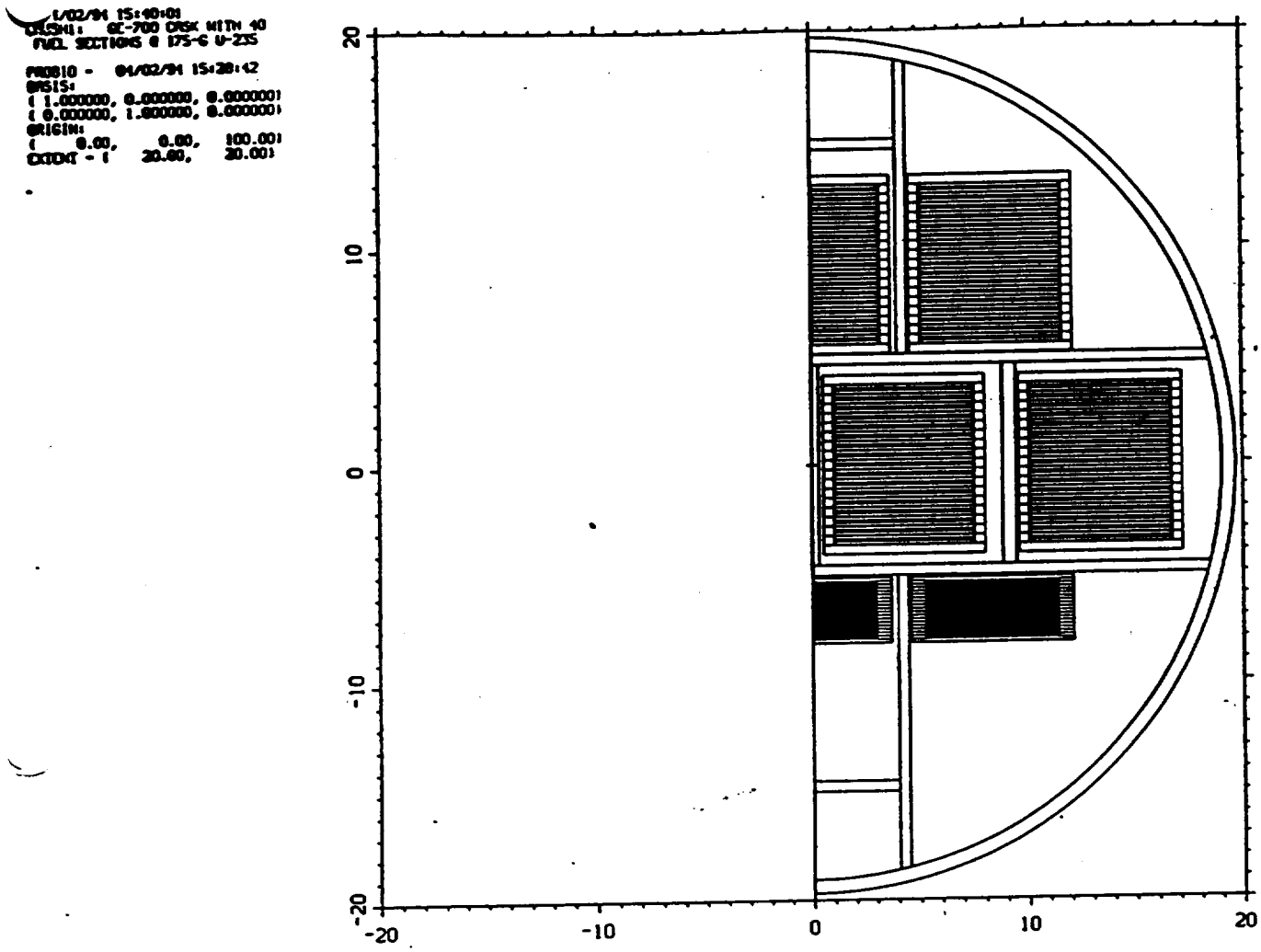

Figure 7. Geometry 2. The 12 fuel sections on one side are crushed and moved as close as possible to the others. k_{eff} is reduced from .92 to .86.

04/02/94 16:01:30
CRUSH: GE-700 CASK WITH 40
FUEL SECTIONS @ 175-G U-235

PROBID - 04/02/94 16:00:47
BASIS:
(1.000000, 0.000000, 0.000000)
(0.000000, 1.000000, 0.000000)
ORIGIN:
(0.00, 0.00, 100.00)
EXTENT - (20.00, 20.00)

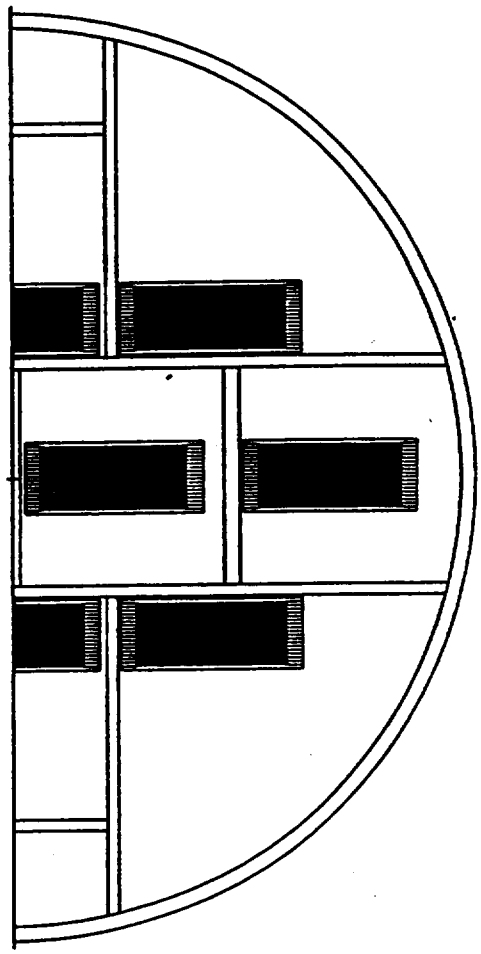

Figure 8. Geometry 3. All 40 elements are crushed, but not the steel divider. k_{eff} = .65.

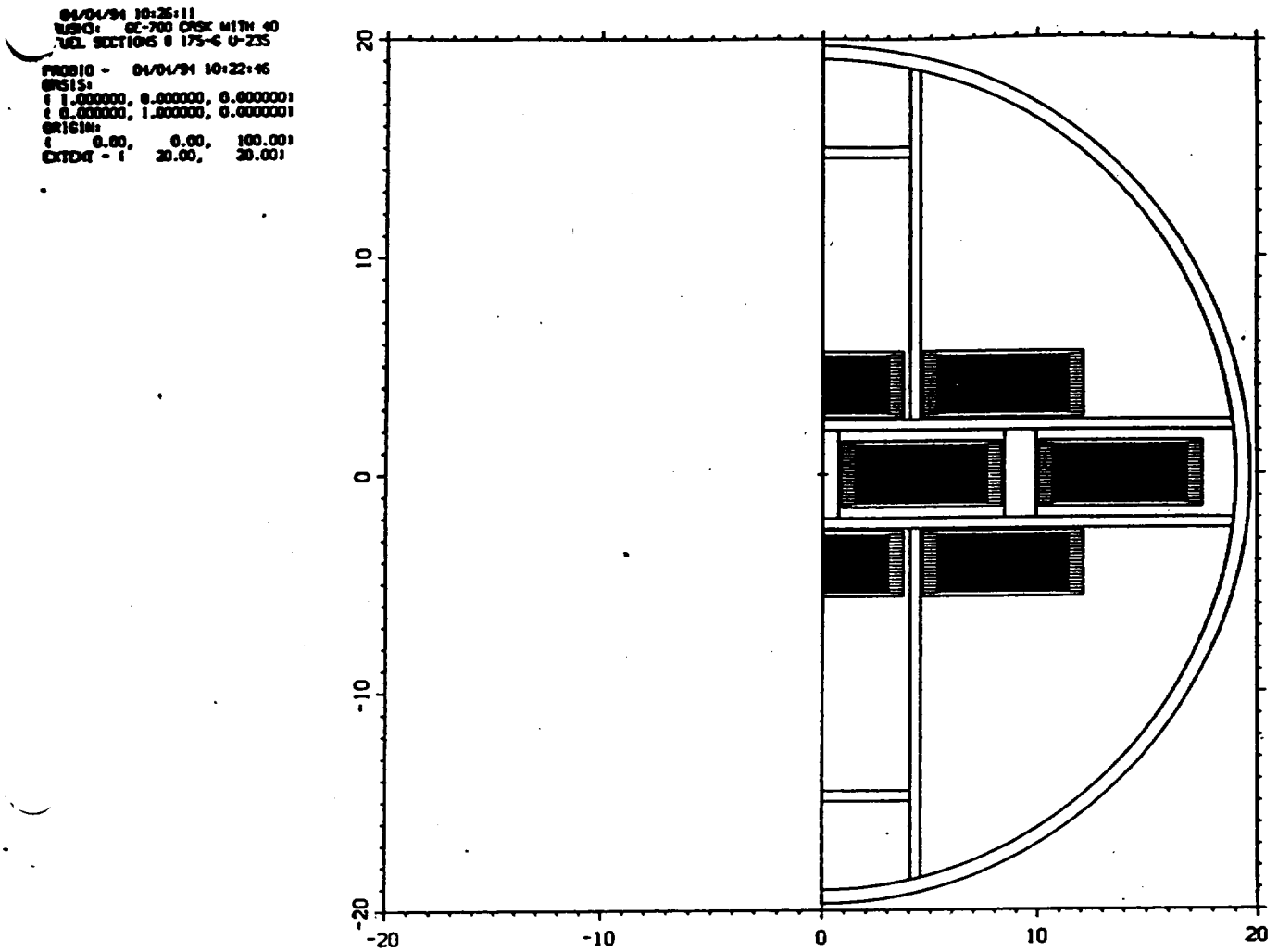

Figure 9. Geometry 4. All 40 sections and the steel divider are crushed and closely packed. k_{eff} = .56.

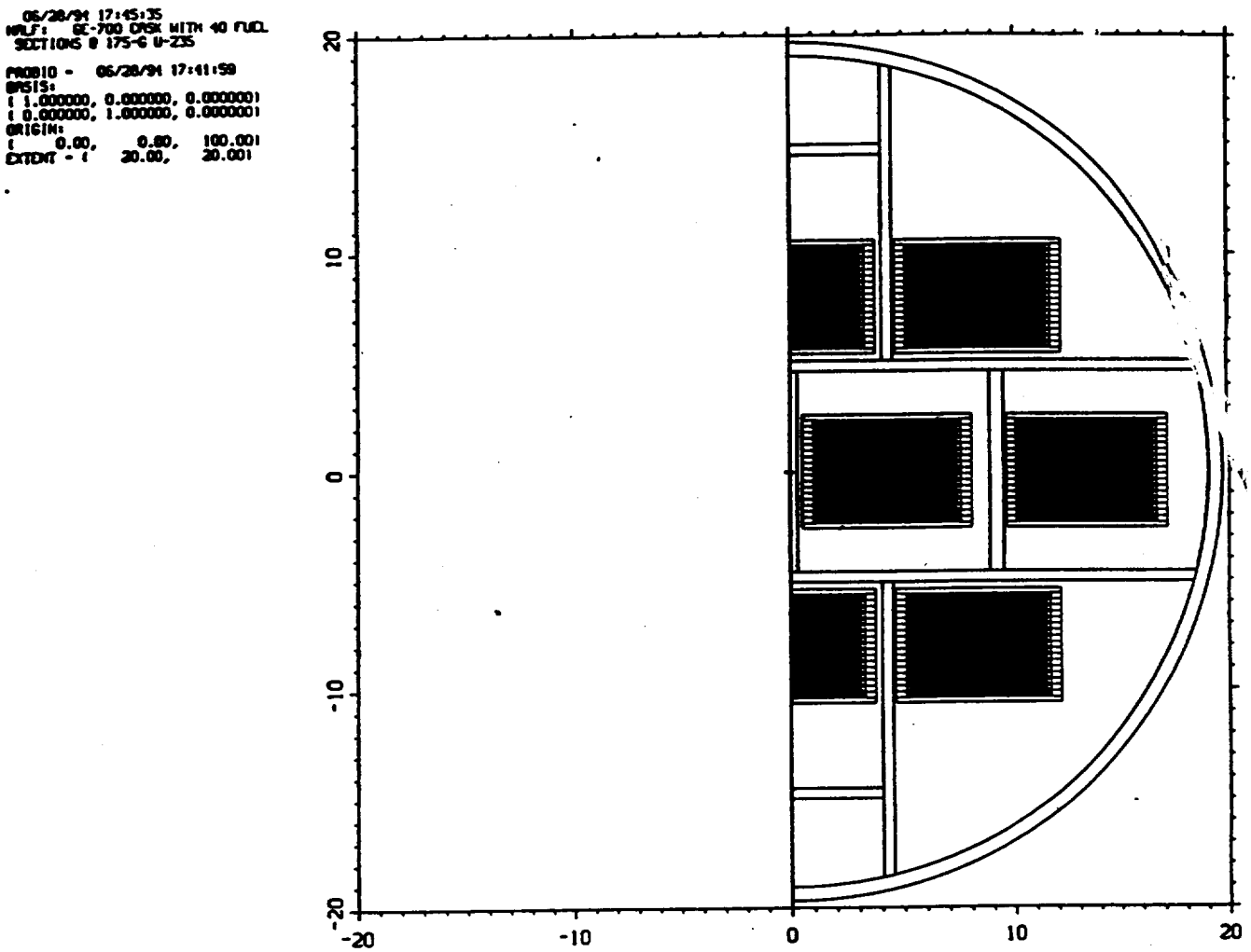

Figure 10. Geometry 5. All 40 sections are partially crushed so the water volume between plates is reduced by half. k_{eff} = 0.807.