# SAFETY ANALYSIS REPORT

for

# THE MODEL BMI-1 SHIPPING CASK

Revision B
August 1, 1980

from

BATTELLE'S COLUMBUS LABORATORIES
505 KING AVENUE
COLUMBUS, OHIO 43201

TABLE OF CONTENTS


| | Page |
|---|---|
| 0. PREFACE FOR REVISION A, 3-28-80 | 0.1 |
| 0.1 Document Index | 0.1 |
| 1. GENERAL INFORMATION | 1.1 |
| 1.1 Introduction | 1.1 |
| 1.2 Package Description | 1.1 |
| 1.2.1 Packaging | 1.1 |
| 1.2.1.1 Description of Cask | 1.1 |
| 1.2.1.2 Description of Product Containers and Baskets | 1.5 |
| 1.2.2 Operational Features | 1.7 |
| 1.2.3 Contents of Packaging | 1.7 |
| 1.2.3.1 Description of Cask Contents | 1.7 |
| 1.2.3.2 Type and Form of Contents Material | 1.11 |
| 1.3 Appendix | 1.19(a) |
| 1.3.1 References | 1.19(a) |
| 1.3.2 Drawings | 1.19(a) |
| 1.3.3 Patent for Safety Plugs | 1.33 |
| 2. STRUCTURAL EVALUATION | 2.1 |
| 2.1 Structural Design | 2.1 |
| 2.1.1 Discussion | 2.1 |
| 2.1.2 Design Criteria | 2.1 |
| 2.2 Weights and Center of Gravity | 2.1 |
| 2.3 Mechanical Properties of Materials | 2.2 |
| 2.4 General Standards for all Packages | 2.3 |
| 2.4.1 Chemical and Galvanic Reactions | 2.3 |
| 2.4.2 Positive Closure | 2.3 |
| 2.4.3 Lifting Device | 2.3 |
| 2.4.3.1 Cask | 2.3 |
| 2.4.3.2 Cover | 2.5 |
| 2.4.3.3 Failure of the Lifting Device Would Not Impair Containment or Shielding | 2.6 |

TABLE OF CONTENTS
(Continued)


| | Page |
|---|---|
| 2.4.4 Tiedown Devices | 2.7 |
| 2.4.4.1 No Yielding with 10G Longitudinal, 5G Transverse, and 2G Vertical Forces | 2.7 |
| 2.4.4.2 Nontiedown Devices Covered or Locked | 2.22 |
| 2.4.4.3 Failure of the Tiedown Device Would Not Impair Meeting Other Requirements | 2.23 |
| 2.5 Standards for Type B and Large Quantity Packaging | 2.23 |
| 2.5.1 Load Resistance | 2.23 |
| 2.5.2 External Pressure | 2.26 |
| 2.6 Normal Transport Conditions | 2.26 |
| 2.7 Hypothetical Accident Conditions | 2.29 |
| 2.7.1 Free Drop | 2.29 |
| 2.7.1.1 End Drop | 2.29 |
| 2.7.1.2 Side Drop | 2.36 |
| 2.7.1.3 Corner Drops | 2.37 |
| 2.7.2 Puncture | 2.41 |
| 2.8 Special Form | 2.42 |
| 2.9 Fuel Rods | 2.42(a) |
| 2.10 Product Containers | 2.44 |
| 2.10.1 Canister | 2.44 |
| 2.10.2 TRIGA Fuel Shipping Assembly | 2.48 |
| 2.10.2.1 Free Drop | 2.49 |
| 2.10.2.2 Description of Welds on Fuel Element Tubes | 2.74 |
| 2.10.2.3 O-Ring Material | 2.74 |
| 2.10.2.4 Thread Sealant | 2.74 |
| 2.10.3 Pulstar Fuel Pin Canister | 2.76 |
| 2.10.3.1 Hoist Fitting | 2.76 |
| 2.10.3.2 Shear Load on Base Plate Weld | 2.77 |
| 2.10.3.3 Pressure Check of Stress and Deflection | 2.77 |

TABLE OF CONTENTS
(Continued)


| | Page |
|---|---|
| 2.10.4 EPRI Crack Arrest Capsules | 2.81 |
| 2.10.5 Union Carbide Process Uranium Oxide Container | 2.81 |
| 2.10.5.1 Weight | 2.81 |
| 2.10.5.2 Normal Conditions | 2.81 |
| 2.10.5.3 Accident Conditions | 2.81(c) |
| 2.11 Baskets | 2.81(p) |
| 2.11.1 Copper Basket for Fermi Fuel Elements | 2.81(p) |
| 2.11.2 BMI-1 Basket Modified for MTR Fuel | 2.82 |
| 2.11.2.1 Lifting Devices | 2.83 |
| 2.11.2.2 Free Drop | 2.84 |
| 2.11.3 BMI-1 Basket Modified for Pulstar Fuel | 2.90 |
| 2.11.3.1 Lifting Devices | 2.91 |
| 2.11.3.2 Free Drop | 2.92 |
| 2.12 Appendix | 2.106 |
| 2.12.1 References | 2.106 |
| 2.12.2 Results of Cover Lifting Tests | 2.108 |
| 2.12.3 Description of MONSA Computer Program | 2.112 |
| 2.12.4 Listing of the PRSVSL Computer Code | 2.223 |
| 3. THERMAL EVALUATION | 3.1 |
| 3.1 Discussion | 3.1 |
| 3.1.1 Summary of Results | 3.1 |
| 3.1.2 Maximum and Minimum Decay Heat | 3.1 |
| 3.2 Summary of Thermal Properties of Materials | 3.5 |
| 3.3 Technical Specifications of Components | 3.5 |
| 3.4 Thermal Evaluation for Normal Conditions of Transport | 3.5 |
| 3.4.1 Thermal Model | 3.5 |
| 3.4.2 Maximum Temperature | 3.8 |
| 3.4.2.1 BRR/MTR Fuel | 3.8 |
| 3.4.2.2 Fermi Fuel | 3.14 |
| 3.4.2.3 EPRI Crack Arrest Capsules | 3.17 |
| 3.4.2.4 Union Carbide Process Uranium Oxide Containers | 3.21(a) |
| 3.4.2.5 Union Carbide Target $U^{235}$ Special Form Capsules | 3.21(g) |
| 3.4.3 Minimum Temperatures | 3.22 |
| 3.4.4 Maximum Internal Pressures | 3.22 |

TABLE OF CONTENTS
(Continued)


| | Page |
|---|---|
| 3.5 Hypothetical Accident Thermal Evaluation..... | 3.23 |
| 3.5.1 Thermal Model..... | 3.23 |
| 3.5.2 Package Conditions and Environment..... | 3.25 |
| 3.5.3 Package Temperatures..... | 3.28 |
| 3.5.4 Evaluation of Package Performance for the Hypothetical Accident Thermal Condition..... | 3.28 |
| 3.5.4.1 Lead Melt..... | 3.28 |
| 3.5.4.2 Maximum Contents Temperature..... | 3.32 |
| 3.6 Appendix..... | 3.41 |
| 3.6.1 References..... | 3.41 |
| 3.6.2 Experimental Tests of Copper Shot..... | 3.42 |
| 3.6.2.1 Thermal Tests..... | 3.42 |
| 3.6.2.2 Calculation of Copper Shot Conductivity..... | 3.47 |
| 4. CONTAINMENT..... | 4.1 |
| 4.1 Containment Boundry..... | 4.1 |
| 4.1.1 Containment Vessel..... | 4.1 |
| 4.1.2 Containment Penetration..... | 4.1 |
| 4.1.3 Seals and Welds..... | 4.1 |
| 4.1.4 Closure..... | 4.1 |
| 4.2 Normal Conditions of Transport..... | 4.2 |
| 4.3 Hypothetical Accident Conditions..... | 4.2 |
| 4.4 Appendix..... | 4.3 |
| 4.4.1 References..... | 4.3 |
| 5. SHIELDING ANALYSIS..... | 5.1 |
| 5.1 Discussion and Results..... | 5.1 |
| 5.1.1 Applicable Regulatory Criteria..... | 5.1 |
| 5.1.2 Design Features..... | 5.2 |
| 5.2 Source Specification..... | 5.2 |
| 5.2.1 Description of Radiation Sources..... | 5.2 |
| 5.2.2 Source Radiation Type and Intensity.... | 5.3 |

TABLE OF CONTENTS
(Continued)


| | Page |
|---|---|
| 5.3 Model Specification | 5.3 |
| 5.3.1 Source Geometry | 5.3 |
| 5.3.2 Description of Shield | 5.3 |
| 5.4 Shielding Evaluation | 5.8 |
| 5.4.1 Dose Rate Under Normal Conditions | 5.8 |
| 5.4.1.1 General Contents | 5.8 |
| 5.4.1.2 Specific Contents | 5.10 |
| 5.4.2 Dose Rate Under Accident Conditions | 5.13 |
| 5.4.2.1 Standard Fire | 5.13 |
| 5.4.2.2 Corner Drop | 5.14 |
| 5.4.2.3 Side Drop | 5.15 |
| 5.5 Appendix | 5.15 |
| 5.5.1 References | 5.15 |
| 6. CRITICALITY EVALUATION | 6.1 |
| 6.1 Discussion and Results | 6.1 |
| 6.1.1 Applicable Regulatory Criteria | 6.1 |
| 6.1.2 Determination of Allowable Number of Packages | 6.2 |
| 6.1.2.1 Fissile Class I | 6.2 |
| 6.1.2.2 Fissile Class II | 6.3 |
| 6.1.3 Contents Evaluated | 6.3 |
| 6.2 Criticality Evaluation for General Contents | 6.4 |
| 6.2.1 Package Fuel Loading | 6.4 |
| 6.2.2 Shipment Without Inner Container | 6.4 |
| 6.2.2.1 Calculational Model | 6.4 |
| 6.2.2.2 Results | 6.6 |
| 6.2.3 Shipment with Inner Container | 6.9 |
| 6.2.3.1 Calculational Model | 6.9 |
| 6.2.3.2 Results | 6.11 |

TABLE OF CONTENTS
(Continued)


| | | Page |
|---|---|---|
| 6.3 | Criticality Evaluation for BRR Fuel Elements.. | 6.13 |
| 6.3.1 | Package Fuel Loading..... | 6.13 |
| 6.3.2 | Calculational Model..... | 6.16 |
| 6.3.3 | Package Regional Densities..... | 6.16 |
| 6.3.4 | Results..... | 6.21 |
| 6.4 | Criticality Evaluation for MTR Fuel Elements.. | 6.22 |
| 6.5 | Criticality Evaluation for Fermi Fuel Elements | 6.22 |
| 6.6 | Criticality Evaluation for TRIGA Fuel Elements | 6.23 |
| 6.6.1 | Package Fuel Loading..... | 6.23 |
| 6.6.2 | Results..... | 6.23 |
| 6.6.3 | Criticality Measurements..... | 6.23 |
| 6.7 | Criticality Evaluation for PULSTAR Fuel Elements..... | 6.27 |
| 6.7.1 | Package Fuel Loading..... | 6.27 |
| 6.7.2 | Normal Conditions..... | 6.30 |
| 6.7.3 | Accident Conditions..... | 6.30 |
| 6.7.3.1 | Calculational Model..... | 6.30 |
| 6.7.3.2 | Package Regional Densities..... | 6.33 |
| 6.7.3.3 | Results..... | 6.37 |
| 6.8 | Criticality Evaluation for Union Carbide Process Uranium Oxide..... | 6.39 |
| 6.8.1 | Package Fuel Loading..... | 6.39 |
| 6.8.2 | Normal Conditions..... | 6.40 |
| 6.8.3 | Accident Conditions..... | 6.40 |
| 6.8.3.1 | Calculational Model (Process Uranium Oxide Only)..... | 6.40 |
| 6.8.3.2 | Package Regional Densities..... | 6.41 |
| 6.8.3.3 | Calculational Model (Process Uranium Oxide Containers with Interspersed MTR Fuel Elements) | 6.46 |
| 6.9 | Criticality Evaluation for Union Carbide Special Form Capsule..... | 6.46 |
| 6.9.1 | Package Fuel Loading..... | 6.46 |
| 6.9.2 | Normal Conditions..... | 6.46 |
| 6.9.3 | Accident Conditions..... | 6.46 |
| 6.10 | Appendix..... | 6.49 |
| 6.10.1 | References..... | 6.49 |

TABLE OF CONTENTS
(Continued)


Page

7. OPERATING PROCEDURES

7.1 Procedures for Loading the Package..... 7.1

7.1.1 Preuse Test and Examination..... 7.1

7.1.1.1 Preuse Test..... 7.1
7.1.1.2 Preuse Visual Examination..... 7.2

7.1.2 Preloading Operations..... 7.4
7.1.3 Loading the Cask..... 7.4
7.1.4 Final Preparation for Shipment of Package..... 7.8

7.1.4.1 Radiation Surveys..... 7.8
7.1.4.2 Smear Survey..... 7.9
7.1.4.3 Security Seal..... 7.9
7.1.4.4 Label and Markings..... 7.9
7.1.4.5 Packing List..... 7.10
7.1.4.6 Shipping Documents..... 7.10

7.1.5 Quality Assurance..... 7.10
7.1.6 Package Transport..... 7.11
7.1.7 Postshipment Requirements..... 7.12

7.2 Procedures for Unloading the Package..... 7.12

7.2.1 Receipt of Package..... 7.12
7.2.2 Unloading the Empty or Loaded Cask..... 7.14

7.3 Preparation of an Empty Package for Transport. 7.15
7.4 Appendix..... 7.16

7.4.1 References..... 7.16
7.4.2 Pressure Check Procedures NS-PI-1.4.... 7.16
7.4.3 Form HP-S1-73..... 7.21
7.4.4 Form HPT-1-76..... 7.23
7.4.5 Work Completion Check Sheet..... 7.25

8. ACCEPTANCE TESTS AND MAINTENANCE PROGRAM..... 8.1

8.1 Acceptance Tests..... 8.1
8.2 Maintenance Program..... 8.1

8.2.1 References..... 8.1
8.2.2 Inspections..... 8.1

TABLE OF CONTENTS
(Continued)


Page

8.2.2.1 Types..... 8.1
8.2.2.2 Frequency..... 8.2
8.2.2.3 Inspecting Personnel..... 8.2
8.2.2.4 Records..... 8.3

8.2.3 Periodic Inspections..... 8.4

8.2.3.1 Annual..... 8.4
8.2.3.2 Biennial..... 8.6

8.2.4 Preusage Inspections..... 8.6

8.2.4.1 General Condition..... 8.6
8.2.4.2 Closure..... 8.7
8.2.4.3 Radiation and Contamination..... 8.7
8.2.4.4 Tiedown..... 8.8

8.2.5 Postaccident Inspections..... 8.8

8.2.5.1 Purpose..... 8.8
8.2.5.2 Items of Inspection..... 8.8

8.2.6 Preventive Maintenance..... 8.9

8.2.6.1 Definition..... 8.9
8.2.6.2 Frequency..... 8.9
8.2.6.3 Records..... 8.10
8.2.6.4 Items..... 8.10

8.2.7 Documentation..... 8.11

## LIST OF TABLES


| | | Page |
|---|---|---|
| Table 0.1 | Index of Documents Previously Submitted | 0.3 |
| Table 1.1 | Comparison of Requested Shipment of TRIGA Fuel to Present License | 1.15 |
| Table 1.2 | Materials in the EPRI Crack Arrest Capsules | 1.19 |
| Table 2.1 | BMI-1 Cask Weight | 2.1 |
| Table 2.2 | Material Properties Utilized in BMI-1 Cask Design | 2.2 |
| Table 2.3 | Impact Forces Used in Analyses for Fuel Can Integrity | 2.49 |
| Table 2.4 | Results of Analysis of Top End Impact Orientation | 2.54 |
| Table 2.5 | Results of Analysis of Bottom End Impact | 2.58 |
| Table 2.6 | Properties of Type 304 Stainless Steel | 2.83 |
| Table 2.7 | Properties of Type 304 Stainless Steel | 2.91 |
| Table 3.1 | Thermophysical Properties Employed for Lead, Steel, and Aluminum | 3.6 |
| Table 3.2 | Test Data | 3.46 |
| Table 5.1 | Summary of Maximum Dose Rates (mR/hr) | 5.4 |
| Table 5.2 | Radionuclides and Associated Curie Limits Planned for Transport in Modified BMI-1 Cask (Sole use of Vehicle) | 5.5 |
| Table 5.3 | Radionuclides and Associated Curie Limits Planned for Transport in Modified BMI-1 Cask (Shipments by Commercial Carrier) | 5.5 |
| Table 5.4 | Radiation Characteristics of Limiting Radionuclides | 5.6 |
| Table 5.5 | Linear Attenuation Coefficient of the Source and Shield Materials | 5.9 |
| Table 5.6 | Irradiation Parameters for EPRI Crack Arrest Capsules | 5.13 |

LIST OF TABLES
(Continued)


| | | Page |
|---|---|---|
| Table 6.1 | Results of the Keno Code Calculations of $K_{EFF}$ for Shipment Without an Inner Container | 6.8 |
| Table 6.2 | Results of Keno Code Calculations of $K_{EFF}$ For Shipment with an Inner Container | 6.12 |
| Table 6.3 | Composition of BRR's Fuel Assembly | 6.13 |
| Table 6.4 | Number of Atoms per CC in the Homogenized Fuel Basket | 6.16 |
| Table 6.5 | Measured Results During Loading to Critical in TRIGA at the University of Arizona | 6.25 |
| Table 6.6 | Number of Atoms per CC in the Homogenized Fuel Region | 6.35 |
| Table 6.7 | Number of Atoms per CC in Stainless Steel | 6.35 |
| Table 6.8 | Number of Atoms per CC in Boral Poison Plate | 6.36 |
| Table 6.9 | Fissile Class III (I, II, III) | 6.38 |
| Table 6.10 | Number of Atoms per CC in the Aqueous Solutions of $UO_2$ | 6.41 |
| Table 6.11 | Number of Atoms per CC in Stainless Steel | 6.44 |
| Table 6.12 | Keno Results for Various BMI-1 Shipping Cask Loadings | 6.45 |

## LIST OF FIGURES


| | | Page |
|---|---|---|
| Figure 1.1 | Crack Arrest Irradiation Capsule | 1.18 |
| Figure 2.1 | Critical Tipping Orientation | 2.7a |
| Figure 2.2 | Typical Force System on Tiedowns | 2.7b |
| Figure 2.3 | Sketch of Fuel Can for the Transport of TRIGA Fuel Assemblies | 2.51 |
| Figure 2.4 | Model of Fuel Can for Top End Fall Orientation | 2.52 |
| Figure 2.5 | Analytical Model for Bottom End Impact Orientation | 2.56 |
| Figure 2.6 | Schematic of Fuel Can for Side Impact Orientation | 2.62 |
| Figure 2.7 | Model of Draw Bolt for Side Impact Orientation | 2.63 |
| Figure 2.8 | Model of Inner Can | 2.69 |
| Figure 2.9 | Model of Fuel Can Cover for Side Impact Orientation | 2.72 |
| Figure 2.10 | Location of Fuel Tubes in Fuel Shipping Canister | 2.75 |
| Figure 3.1 | Effective Thermal Conductivity of Lead to Shell Interface, Gap (Node 118) | 3.7 |
| Figure 3.2 | Sketch of Model for Heat Flow From EPRI Crack Arrest Capsule to Cavity Wall | 3.19 |
| Figure 3.2a | Analytical Thermal Model of Union Carbide Process Uranium Oxide Container and Steady-State Temperature Profile | 3.21(b) |
| Figure 3.2b | Thermal Model of Cask | 3.21(d) |
| Figure 3.2c | Sketch of Thermal Model of Union Carbide Process Uranium Oxide Containers in BMI-1 Basket | 3.21(f) |
| Figure 3.2d | Analytical Thermal Model of Union Carbide Target $U^{235}$ Special Form Capsule in BMI-1 Cask | 3.21(h) |
| Figure 3.2e | Sketch of Typical Rack for Supporting Union Carbide $U^{235}$ Special Form Capsule in BMI-1 Basket | 3.21(h) |

LIST OF FIGURES
(continued)


| | | Page |
|---|---|---|
| Figure 3.3 | Thermal Model Employed for BMI-1 Fire Thermal Analysis | 3.24 |
| Figure 3.4 | Starting Temperatures for BMI-1 Fire Analysis | 3.26 |
| Figure 3.5 | Calculated Heat-Rejection Capability Versus Exterior Wall Temperature and Ambient Temperature for BMI-1 | 3.27 |
| Figure 3.6 | Calculated Thermal History for the Modified BMI-1 | 3.29 |
| Figure 3.7 | Melt-Front Boundary Versus Time | 3.30 |
| Figure 3.8 | Sketch of Fuel Basket | 3.33 |
| Figure 3.8a | Calculated Thermal History Union Carbide Process Uranium Oxide Canisters in the Basket of the BMI-1 Cask | 3.40(b) |
| Figure 3.8b | Calculated Thermal History for a Special Form Capsule with Decay Heat of 1500 Watts in the Innermost Position in the Basket of the BMI-1 Cask | 3.40(d) |
| Figure 3.9 | Representative Time-Temperature Relationship in Simulated Fuel Subassembly with Copper Shot | 3.45 |
| Figure 5.1 | Shield Configurations Utilized in the Dose Rate Calculations for the Modified BMI-1 Cask | 5.7 |
| Figure 6.1 | Calculation Model Utilized in Criticality Evaluation | 6.5 |
| Figure 6.2 | Cross Section of 3x3x3 Array of Casks | 6.7 |
| Figure 6.3 | Calculation Model Utilized in Criticality Evaluation | 6.10 |
| Figure 6.4 | Standard Fuel Assembly for Battelle Research Reactor | 6.14 |
| Figure 6.5 | Top View of Shipping Cask Fuel Basket | 6.15 |
| Figure 6.6 | Axial Representation of the System (System Immersed in Water) | 6.17 |

LIST OF FIGURES
(Continued)


Page

Figure 6.7 Keno Cross-Sectional Representation of BMI's Shipping Cask Immersed in Water.... 6.18

Figure 6.8 Loading to Critical Results in TRIGA Using Aluminum-Clad Fuel Elements..... 6.26

Figure 6.9 Fuel Storage Canister..... 6.28

Figure 6.10 Fuel Loading Arrangement..... 6.29

Figure 6.11 $k_{oo}$ Versus Fuel Pin Loading..... 6.32

Figure 6.12 Keno Cross-Sectional Representation of BMI's Shipping Cask Immersed in Water..... 6.34

Figure 6.13 Horizontal Cross-Section of Loaded Cask.... 6.42

Figure 6.14 Vertical Cross-Section of Loaded Cask Box Types 1, 2, and 3 in a Void Cask..... 6.43

Figure 6.15 Vertical Cross-Section of Box Type Carrying MTR Element in Flooded Cask..... 6.47

Figure 7.1 Pressure and Liquid Check Manifold..... 7.17

## LIST OF DRAWINGS


| Drawing No. | Title | Page |
|---|---|---|
| 43-6704-0001, Rev. A | Shipping Cask Assembly BMI-1 | 1.20 |
| 44-4409-0003, Rev. B. | Lid, BMI-1 | 1.20A |
| 420040 | Safety Plug Assembly | 1.21 |
| 41-4409-0004, Rev. B | Basket Assembly BMI-1 Cask | 1.22 |
| 00-000-421, Rev. C | Inner Can Assembly BMI-1 Cask | 1.23 |
| K 5928-5-1-0049D, Rev 5/12/66 | Proposed Method of Shipping One Fermi Fuel Element in BMI-1 Cask | 1.24 |
| 1020, Rev. B | Fuel Shipping Assembly University of Arizona | 1.25 |
| 00-000-236, Rev. A. | BMI-1 Basket Made to Ship Texas A&M Fuel Assembly | 1.26 |
| 00-000-391, Rev. C. | Basket BMI-1 Cask (AI) | 1.27 |
| AIHL S8DR 0019-01 | S8DR Storage Can | 1.28 |
| 00-001-376, Rev. A. | BMI-1 Basket Made to Ship Suny Pulstar Fuel Canister Assembly | 1.29 |
| 00-001-375 | Pulstar Fuel Storage Canister S.U.N.Y. | 1.30 |
| 818C199 | Pulstar Fuel Element | 1.31 |
| RRM245 | BMI-1 Cask Basket Spacer for ALRR Converter Fuel | 1.32 |
| 101501 | Waste Form Process Shipping Container Outline Drawing | 1.32A |

(h) BMI-1 Basket Spacer

BMI-1 Cask Basket Spacer for ALRR Converter Fuel; Ames Laboratory Research Reactor, (File Drawing) Number RRM 245, dated 4/3/77.

(i) Union Carbide Process Uranium Oxide Container

Union Carbide uranium oxide waste form process shipping container as shown on Union Carbide Corporation Drawing No. 101501, Rev. O.

(j) Union Carbide Target $U^{235}$ Special Form Capsule

Union Carbide target material special form capsules having nominal outside dimensions of 1.25 inches OD x 18 inches long, and made of AISI 300 Series stainless steels.

1.2.2 Operational Features

Operation of the BMI-1 is discussed in Section 1.2.1. That Section and the referenced drawings clearly explain operation of the cask and show all valves, openings, seals, etc.

1.2.3 Contents of Packaging

1.2.3.1 Description of Cask Contents

In accordance with the requirements of § 71.22(b) of 10-CFR-71-Subpart B, the materials planned for shipment in the BMI-1 cask are described as follows.

(1) Radioactive Constituents - Identification and Maximum Radioactivity

(a) Shipments by Any Transport Vehicle (Except Aircraft) Assigned for Sole Use. The radioactive contents of the cask may include any radionuclide(s) classified according to the transport grouping in Appendix C of 10-CFR-71. Quantities (in curies) of the respective radionuclides may be equal to or less than any of the following group limits:

| Transport Group* | Quantity (in curies) |
|---|---|
| I | 1,000 |
| II | 8,120 |
| General Mixed fission products | Unlimited** |
| III | 4,960 |
| IV | 11,070 |
| V | 8,120 |
| VI and VII | 800,000 |

* As defined in § 173.390 of 49 CFR and Appendix C of 10-CFR-71.

** Limit will be imposed by dose-rate limits specified in § 173.393 (i) of 49 CFR.

Also, 40,000 curies of Co-60, as licensed in Amendment 71-3, License Number SNM-7, Docket Number 70-8, July 17, 1969, or equivalent sources of nonfissile isotopes having gamma or Bremsstrahlung emission energies less than 1.33 Mev may be shipped in the modified BMI-1 cask with the copper basket or other additional internal shielding.

(b) Shipments by Commercial, Contract, Governmental, and Private Carriers. The radioactive contents of the cask may include any radionuclide(s) classified according to the transport grouping in Appendix C of 10-CFR-71. Quantities (in curies) of the respective radionuclides may be equal to or less than any one of the following group limits:

| Transport Group* | Quantity (in curies) |
|---|---|
| I | 1,000 |
| II | 2,520 |
| General mixed fission products | Unlimited** |
| III | 1,540 |
| IV | 3,440 |
| V | 5,000 |
| IV and VII | 800,000 |

(2) Identification and Maximum Quantities of Fissile Constituents

(a) Without Leakproof Inner Container. Fissile constituents planned for shipment in the cask without the leakproof inner container along with respective quantities are as follows:

U-233 . . . . . 280 grams
Pu-239. . . . . 280 grams
U-235 . . . . . 500 grams

---

* As defined in § 173.390 of 49 CFR and Appendix C of 10-CFR-71.

** Limit will be imposed by dose-rate limits specified in § 173.393 (i) of 49 CFR.

(b) With Leakproof Inner Container. Fissile constituents planned for shipment in the cask with the leakproof inner container along with respective quantities are as follows:

U-233 . . . . . 480 grams
Pu-239. . . . . 480 grams
U-235 . . . . . 8450 grams

(3) Chemical and Physical Form

Radioactive and fissile radioactive materials of the following chemical and physical forms may be shipped in the BMI-1 cask:

(a) Special form, as defined in § 71.4(0)of 10-CFR-Part 71.

(b) Normal form, providing that the materials are solid and are securely confined in the leakproof inner containers, Drawing 00-000-421, Rev. C., or Drawing No. 101501, Rev. O., during all normal and accident conditions.

(c) Normal form providing that all materials are packaged and securely confined in the cask cavity. Normal form shall be defined as solid material nonpowder that must remain solid up to 500 F. Only special form materials may be shipped in the cask with water coolant.

(4) Extent of Reflection, Neutron Absorbers, and H/X Atomic Ratios

(a) Without Inner Container. Reflection, absorption, and atomic characteristics of the package contents without the inner container are summarized as follows:

Extent of reflection . . . . . Maximum reflection

Nonfissile neutron absorbers present. . . . . None assumed (although various types would be present)

Atomic ratio of moderator to fissile constituents*:

| Isotope | H/X |
|---|---|
| U-233 | 450 |
| U-235 | 500 |
| Pu-239 | 800 |

(b) With Inner Container. Reflection, absorption, and atomic characteristics of the package contents with the inner container are summarized as follows:

Extent of reflection . . . . . Maximum reflection

Nonfissile neutron absorbers present. . . . . Not assumed (although various types would be present)

Atomic ratio of moderator
to fissile constituents*:

| Isotope | H/X |
|---|---|
| U-233 | 20 |
| U-235 | 20 |
| Pu-239 | 20 |

(5) Maximum Weight

The maximum weight of the package contents is 1,110 pounds.

(6) Maximum Amount of Decay Heat

A decay heat load of 1.5 kw is the maximum analyzed for the package contents.

1.2.3.2 Type and Form of Contents Material

(a) BRR/MTR Type Fuel Elements

Intact irradiated MTR or BRR fuel assemblies containing not more than 200 grams U-235 per assembly prior to irradiation. Uranium may be enriched to a maximum 93 w/o in the U-235 isotope. Active fuel length shall be 25 inches.

This report presents a safeguards evaluation of the design and proposed uses of a shielded cask for transporting irradiated fuel assemblies from the Battelle Research Reactor to the Idaho Falls Chemical Processing Plant. The shipment of irradiated fuel is to be made by truck-trailer according to regular commercial conditions and regulations.

---

* Most reactive H/A (Reference 2).

The Texas A&M University requests a special permit to make shipments of MTR reactor fuel in the BMI-1 Shipping Cask (Number SP5957). This request involves the shipment of 23 partially irradiated and 13 unirradiated elements from the Texas A&M Nuclear Science Center to the University of Virginia.

The BMI-1 fuel basket has been modified according to Battelle Memorial Institute Drawing Number 00-000-236, Rev. A, (attached) to individually support 12 MTR fuel elements in the BMI-1 cask.

(b) Enrico Fermi Fuel Elements

Intact irradiated Enrico Fermi Core. A fuel assembly containing not more than 4.77 kgs U-235 prior to irradiation. Uranium may be enriched to 25.6 w/o in the U-235 isotope.

This report presents an evaluation of the proposed use of the BMI-1 spent fuel shipping cask to transport one Enrico Fermi Atomic Power Plant core-A fuel subassembly per trip from the Enrico Fermi plant located near Monroe, Michigan, to the Battelle Nuclear Center near Columbus, Ohio, and then to the Nuclear Fuels Services reprocessing plant near West Valley, New York. The BMI-1 cask was approved in July, 1964, and given License Number SNM 807 (Docket Number 70-813) for use in shipping 24 spent BRR fuel elements per trip to SRL. Shipment in this cask of one Fermi fuel subassembly, removed from the reactor 10 days prior to shipment, requires a different fuel element basket and basket support inside the cask. Enclosed Drawing Number 0049D, Rev. 5/12/66, provides a description and details of the proposed modifications. The main part of this modification is a copper casting which provides mechanical support, additional shielding, and a good thermal path for the removal of decay heat from the subassembly. There are no other cask modifications necessary.

The analysis given in this report is based on shipment of fuel elements with the maximum fuel burnup expected during

TABLE 1.2. MATERIALS IN THE EPRI CRACK ARREST CAPSULES

| Material | Component | Weight, lb |
|---|---|---|
| Aluminum | Capsule walls<br>Piping | 68<br>5 |
| Carbon Steel | Specimens | 123 |
| Stainless Steel (Type 304 and 347) | Seal Plugs, T/C & Heater Sheath | 10 |
| Constantan Wire | Thermocouples | ∿1 |
| Magnesium Oxide | T/C Insulation | 6 |
| Nickel | Heaters | ∿2 |
| Inconel | Heaters | ∿2 |
| $U^{238}$ | Fission Monitor | 36 mg |
| $Np^{237}$ | Fission Monitor | 60 mg |

(j) Union Carbide Process Uranium Oxide Containers

This Safety Analysis Report shows that up to twenty-four (24) containers can be shipped in the BMI-1 cask. Twelve containers are transported in each of the two baskets. Since the basket cavity length is 26.12 inches (Drawing 41-4409-0004, Rev. B) and the containers are only 16.0 inches long, a nominally 9.62-inch long spacer will be placed in the bottom of each basket cell prior to inserting the container. This will limit the axial motion of the container to a maximum of about 0.5 inch.

Each container may be loaded with up to 352 grams of $U^{235}$ in the form of processed uranium oxide. The oxide is formed in the capsules through pyrolysis of a liquid solution of the uranium. The resulting oxide is in the form of flakes and powder of random size.

(k) Union Carbide Target $U^{235}$ Special Form Capsules

This Safety Analysis Report shows that up to twenty-four (24) $U^{235}$ target special form capsules can be shipped in the BMI-1 cask. The special form capsules are nominally 18 inches long. One capsule will be loaded in each basket cell. The 1.25-inch capsules will be held within the basket cell by a rack designed to permit free air connection around the capsule. The axial motion of the capsules will be restricted to a maximum of 0.5 inch by a spacer placed in the bottom of each basket cell before inserting the special form capsule.

Each capsule may contain up to 100 grams of $U^{235}$.

## 1.3 Appendix

### 1.3.1 References

(1) Packaging of Radioactive Material for Transport and Transportation of Radioactive Material Under Certain Conditions; U.S. Nuclear Regulatory Commission, Title 10, Chapter 1, Part 71, June 30, 1978.

(2) Paxton, H. C., et al, "Critical Dimensions of Systems Containing U-235, Pu-239, and U-233", USAEC, TID 7028 (1964).

### 1.3.2 Drawings

The drawings of the cask, skid, and the various canisters and baskets follow.

| REVISIONS | | | |
|---|---|---|---|
| L. | DESCRIPTION | DATE | APPROVED |
| | | | |

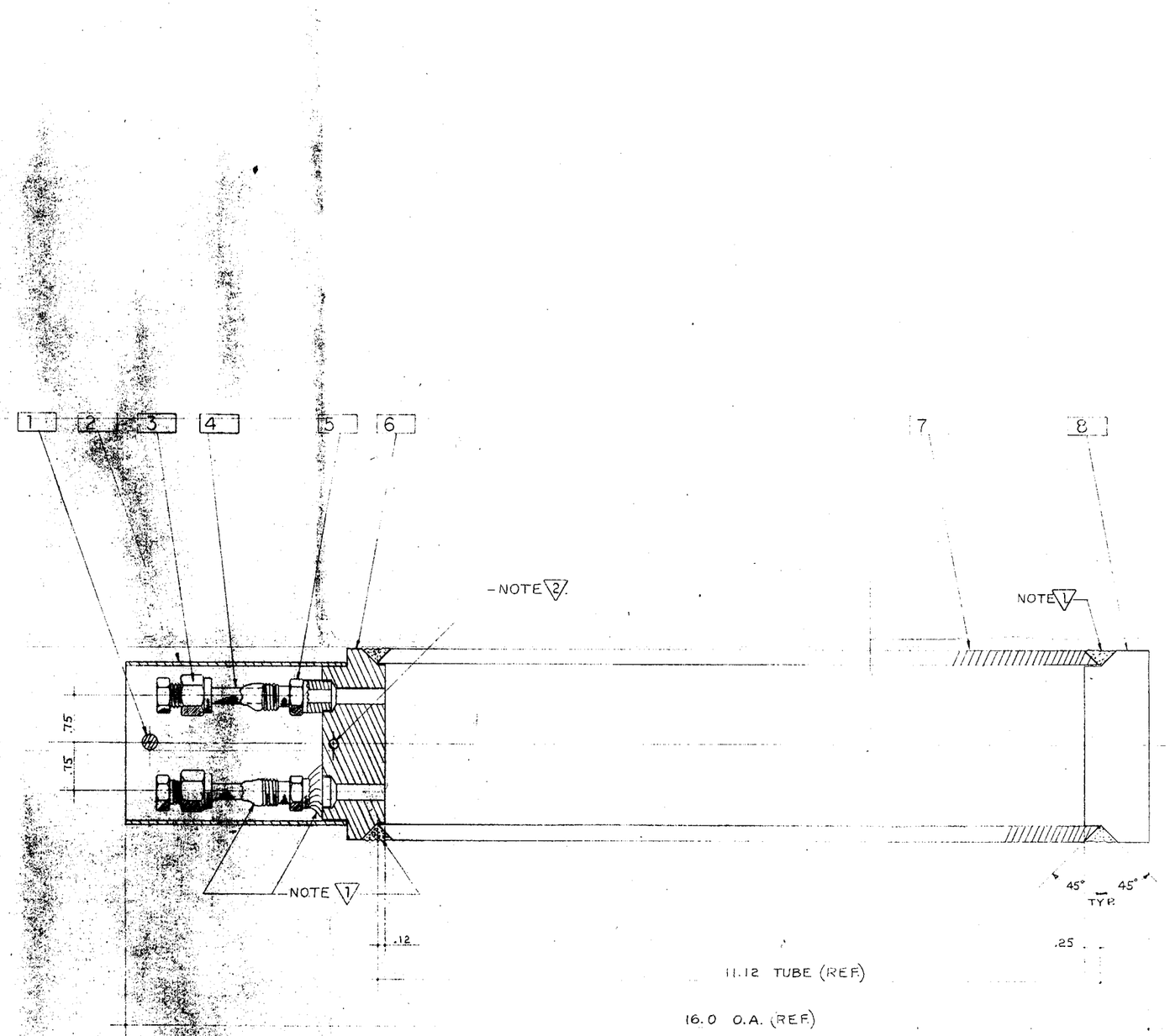


| | | | |
|---|---|---|---|
| 1 | 1 | LIFTING BAIL 6061-T6 | ALUM. OR EQUIV |
| 2 | 1 | PROTECTIVE COLLAR 6061-T6 .065 WALL 2.5 O.D. 3.5 LG. | ALUM. OR EQUIV |
| 3 | 2 | CAP SWAGELOK OR EQUIV. A-400-C | ALUM. OR EQUIV. |
| 4 | 2 | TUBE .250 O.D. .035 wall 1.5 LG. 6061-T6 | ALUM. OR EQUIV |
| 5 | 2 | FITTING, MODIFIED PARK. HANNA 4-$\frac{1}{4}$-ZHBW2-D 6061- | ALUM. OR EQUIV |
| 6 | 1 | TOP CAP 3. O.D. 1. THICK min 6061-T6 | ALUM. OR EQUIV. |
| 7 | 1 | CYLINDER 3. O.D. .25 wall 6061-T6 | ALUM. OR EQUIV |
| 8 | 1 | BOTTOM CAP 3. O.D 1. THICK min. 6061-T6 | ALUM. OR EQUIV. |

NOTE:

1. TIG WELD ALL AROUND WITH LINDE HQ $\frac{3}{32}$ $\phi$ ROD 4043 OR EQUIVALENT FOR FITTINGS, EXTENSION TUBE, TOP & BOTTOM, FULL PENETRATION
2. DRILL $\frac{5}{32}$ $\phi$ HOLES IN COLLAR [2] & TOP [6] FOR COLLAR RETAINER PIN.

| | |
|---|---|
| TOLERANCES ± | UNION CARBIDE CORPORATION<br>CORPORATE RESEARCH LABORATORY<br>TUXEDO, NEW YORK |
| DRAWN: M.N.R. 15 JUL '80 | WASTE FORM PROCESS SHIPPING CONTAINER OUTLINE DRAWING |
| CHECKED: | |
| DATE: | SCALE: FULL SIZE · SIZE: D · DRAWING NO.: 101501 |

The corresponding margin of safety is:

$$MS = \frac{F_{tu}}{\sigma_t} - 1 = \frac{75,000}{47,200} - 1 = 0.59 \quad .$$

In addition, the shear stress:

$$\sigma_{sh} = \frac{WG}{nA} = \frac{W_{cover} G \sin \alpha}{nA}$$

where:

$$W_{cover} = \text{weight of the cover only} = 1,200 \text{ pounds} \quad .$$

The shear stress then is:

$$\sigma_{sh} = \frac{(1,200)(128)(\sin 24.75)}{(12)(0.633)} = 8,500 \quad .$$

The margin of safety is:

$$MS = \frac{F_{su}}{\sigma_{sh}} - 1 = \frac{40,000}{8,500} - 1 = 3.7 \quad .$$

## 2.7.2 Puncture

An empirical equation for the minimum steel shell thickness required for lead-filled casks has been developed by the Oak Ridge National Laboratory.[4] The equation has the form:

$$t = \left(\frac{W}{F_{tu}}\right)^{0.71} \quad ,$$

where:

$t$ = minimum shell thickness, inch
$W$ = weight of lead-lined cask, pound
$F_{tu}$ = ultimate tensile strength, psi .

Therefore, the required shell thickness is:

$$t = \left(\frac{W}{F_{tu}}\right)^{0.71} = \left(\frac{23,600}{75,000}\right)^{0.71} = 0.44 \text{ inch}$$

On the basis of an outer shell thickness of 0.68, the cask design is shown to comply with the regulatory puncture criteria.

## 2.8 Special Form

The BMI-1 shipping cask is capable of transporting a variety of radioactive materials, including various special form materials, as follows:

### (a) Certificate of Compliance, Revision 6

Paragraph 5(b) (1) (iv) - Greater than Type A quantities of by-product material in special form.

Paragraph 5(b) (2) (iv) - For the contents described in 5(b) (1) (iv): Gamma sources securely confined in the cask cavity to preclude secondary impacts during accident conditions of transport. Thermal heat generation rate shall be limited to 200 watts.

### (b) $U^{235}$ Target Material in Union Carbide Corporation Special Form Capsules

The capsules shall be held in special racks within the baskets and shall be securely confined to preclude secondary impacts during accident conditions of transport. The number of capsules

per shipment shall be limited so that the total thermal heat generation for all capsules as an aggregate does not exceed 1500 watts.

Materials shipped under these conditions will be shown to meet the special form requirements of Paragraph 71.4(O) of Appendix D, to 10CFR, Part 71.

## 2.9 Fuel Rods

To meet licensing requirements for shipment of the Fermi fuel subassemblies, it is necessary that the element not fail under

## 2.10.4 EPRI Crack Arrest Capsules

The six fission monitors consist of 0.25 inch OD x 0.38 inch long stainless steel tubes containing either 12 mg of U238 (3 monitors) or 20 mg of $Np^{237}$ (3 monitors). Each tube is sealed and fits into a steel dosimeter block which is sealed by welding. Because of the way in which the fissile material is encapsulated, release into the cask cavity or to the environment is extremely remote. Moreover, the quantities are much less than the maximum release permitted by the proposed regulations[13]. The amount of $U^{238}$ present is $1.2(10^{-8})$ curies and the amount of $Np^{237}$ present is $4.2(10^{-5})$ ci. The maximum which can be released according to the proposed regulations is unlimited for $U^{238}$ and 0.005 Ci for $Np^{237}$.

## 2.10.5 Union Carbide Process Uranium Oxide Container

The Union Carbide Process uranium oxide container is designed to transport up to 352 grams of $U^{235}$ in oxide form. The container (UCC drawing 10150, Rev. 0) is essentially a 3-inch O.D., 1/4-inch thick, 11.12-inch long cylinder with 1-inch thick welded end caps. A protective collar (2.5-inch O.D.. 0.065-inch wall, 3.5-inch long) surrounds two fitting assemblies on the top end. The container material is 6061-T6 aluminum, welded with 4043 rod filler.

### 2.10.5.1 Weight

The empty container weighs about 4.1 pounds, including fittings weighing about .040 pounds each. With 400 g of uranium oxide as contents, the filled container weighs 5.0 pounds.

### 2.10.5.2 Normal Conditions

(a) Heat. The maximum capsule temperature for 130 F ambient is 300 F (Section 3.4.2.4). Assuming an initial temperature of 70 F at one

atmosphere (absolute), the resulting pressure can be estimated from the following relationship:

$$P/T = \text{constant}$$

$$P_{130} = 1.7 \text{ psia}$$

Since the container does not yield during the more severe conditions of the fire accident (2.10.5.3c), it will not yield for the normal heat condition.

(b) Cold. The minimum temperature of the loaded container is 100 F, for a cask ambient of -40 F. Since aluminum retains substantial ductility at this temperature, brittle fracture is not a consequence of the normal cold condition, and the container stresses remain below yield.

(c) Free Drop. Since the capsule is shown to withstand the accident 30 foot drop conditions without exceeding yield (2.10.5.3a), the container will not yield for the normal free drop condition.

(d) Vibration. The natural frequency of a cylinder is approximated by a beam having fixed ends. From Marks,[17] p. 5-93, the natural frequency is given by

$$f = \frac{\alpha}{2\pi}\left[\frac{EIg}{WL^3}\right]^{1/2}$$

where

$f$ = natural frequency, Hz

$\alpha$ = 1 (fixed ends)

$E$ = elastic modulus = $10^7$ psi

$I$ = container cross-section moment of inertia

$= \pi(\overline{R})^3 t$

$= \pi(1.375)^3(0.25)$

$= 2.04 \text{ in}^4$

$g = 386 \text{ in/sec}^2$

$W$ = container wall weight = 2.4 lb

$L$ = wall length = 11.12 in

therefore

$f = 246$ Hz

From RDT F 8-9T[18], observed truck vibration loads for frequencies from 1-500 Hz are about 0.5 g (vertical). This translates into a package response given by[18]

$$g_r = 2.5\ [f]^{1/2}$$
$$= 39\ g's$$

The stress in the container wall resulting from this loading is

$$\sigma = \frac{M}{Z}$$

where from Roark[19]

$$M = \frac{WLG}{12}$$
$$= \frac{2.4(11.12)(39)}{12}$$
$$= 86.7\ \text{in-lb}$$
$$Z = \frac{\pi(R_i)^3 t}{R_i}$$
$$= \pi(1.375)^2(0.25)$$
$$= 1.48\ \text{in}^3$$

therefore

$$\sigma = 59\ \text{psi}$$

This value is far below the endurance limit of 6061-T6 aluminum, and therefore, the container will not fail due to fatigue.

(e) Shock. RDT F 8-9T[18] permits the static analysis of shock loadings, independent of direction. From Table 2[18], the maximum cask shock load is 10 g. Assuming the container experiences this loading, it is still less severe than the accident deceleration (Section 2.10.5.3a), and consequently, the container does not yield.

(f) External Pressure. Assuming that the container experiences an external pressure gradient, Section 8, Division 1, of the ASME code[20], Paragraph UG-28 illustrates a procedure to calculate the vessel wall thickness required to withstand an external pressure

Given,

$$\frac{D_o}{t} = 12$$

Where

$D_o$ = cylinder O.D.
$t$ = cylinder wall thickness

and

$$\frac{L}{D_o} = 3.71$$

where

L = 11.12 in = cylinder length

therefore, from figure UGO-28.0 (App. V)[20],

$$A = .0090$$

therefore, form figure UNF-28.30, for 6061-T6, 300 F,

$$B \approx 9300$$

therefore

$$P_a = \frac{4B}{3(D_o/t)}$$

where

$P_a$ = allowable external pressure
= 1030 psig

Therefore, the container is capable of withstanding the 25 psig external pressure.

## 2.10.5.3 Accident Conditions

(a) Free Drop. From Table 2.3, the estimated cask decelerations resulting in a thirty foot fall onto an unyielding surface are:

| Cask Orientation | Deceleration, g's |
|---|---|
| Top end | 88 |
| Bottom end | 368 |
| Side end | 400 |
| Corner (65° from horizontal) | 153 |

Bottom End Drop, buckling. For an unpressurized cylinder, axial compression, Baker, et al,[21] p. 229, the buckling stress is given as

$$\frac{\sigma_{cr}}{\eta} = K_c \frac{\pi^2 E}{12(1-\mu^2)} \left(\frac{t}{L}\right)^2$$

where

$\sigma_{cr}$ = design allowable buckling stress
$\eta$ = plasticity correction factor
$K_c$ = buckling coefficient
$E$ = elastic modulus
$\mu$ = Poisson's ratio
$t$ = wall thickness
$L$ = wall length

$K_c$ depends on whether the cylinder is long or short. The criteria for a short cylinder is

$$\gamma Z < \frac{\pi^2 K_{co}}{2\sqrt{3}}$$

where

$\gamma = \phi(R/t)$
$R$ = inside radius = 1.25 in
$t$ = 0.25 in

therefore

$R/t = 5.0 \rightarrow \gamma = 0.9$ (fig 10-9, p. 230)[21]

$$Z = \frac{L^2}{Rt}\sqrt{1-\mu^2}$$

$$= \frac{(11.12)^2}{(1.25)(0.25)}\sqrt{1-(0.32)^2}$$

$$= 377$$

therefore

$\gamma Z = 340$

$K_{co} = \phi$(end conditions)
= 1 (simply supported)
= 4 (fixed)

therefore the maximum value of the right-hand side of the criterion is

$$\frac{\pi^2 K_{co}}{2\sqrt{3}} = 2.9$$

Consequently, the container is a long cylinder, for which $K_c$ is given by p. 230[21]

$$K_c = \frac{4\sqrt{3}}{\pi 2}\ \gamma Z$$

$$= 239$$

therefore

$$\frac{\sigma_{cr}}{\eta} = 1.1 \times 10^6 \text{ psi} \quad .$$

In addition to this buckling mode, Euler (column) buckling should be checked. From p. 231,[21]

$$\frac{\sigma_{cr}}{\eta} = \frac{\pi^2 cE}{2}\left(\frac{R}{L}\right)^2$$

If simply supported edges are assumed, c = 1, therefore

$$\frac{\sigma_{cr}}{\eta} = 6.2 \times 10^5 \text{ psi} \quad .$$

For elastic buckling, $\eta = 1$, either mode of buckling will not occur below the yield point.

For inelastic buckling, a curve of $\sigma_{cr}$ vs. $\sigma_{cr}/\eta$ is given for materials like aluminum, p. 268, figure 10-52, curve E[21]. For the minimum value of $\sigma_{cr}/\eta$ above, $\sigma_{cr}$ = yield. Consequently, inelastic buckling will not occur below the yield point, and the free drop impact analysis will assume failure by buckling will not occur if the container does not yield.

<u>Bottom end drop, cylinder wall stress.</u> Assume that a spacer weighing the same as the containers is supported on the container in the basket. The stress in the container is given by

$$\sigma_{max} = \frac{WG}{A}$$

where

$W = 2(W_c) = 10$ lb

$G = 368$

$A = 2.16 \text{ in}^2$

therefore

$$\sigma_{max} = 1700 \text{ psi} < \text{yield}$$

Corner shear. Assuming that total weight acting on the bottom container is directed transverse to the corner weld, the shear stress would be

$$\tau = \frac{WG}{A_s}$$

where

$W = 10$ lb

$G = 368$

$A_s = 0.707\pi Dt = 1.4 \text{ in}^2$

therefore

$$\tau = 2600 \text{ psi} < \text{shear yield}$$

Bottom End Drop, Top Collar Buckling Stress. For a thin tube, the force required to buckle is given by Kirk[22],

$$F_{cr} = \frac{\pi\sigma_y t}{2}\left[\frac{\pi tD}{h_p} + h_p\right]$$

where

$D$ = mean diameter = 2.44 in

$t$ = wall thickness - .065 in

$h_p$ = length of "pleat"

$$= \pi t\left(\frac{E}{12\sigma_y}\right)^{1/2}$$

At 300 F, $\sigma_y$ (aluminum) = 32,800 psi, therefore

$$h_p = 0.93 \text{ in}$$

and

$$F_{cr} = 5980 \text{ lb}$$

or

$$\sigma_{cr} = 12{,}000 \text{ psi}$$

Since this stress is lower than yield, it becomes the design criteria for the top collar. The stress created by a container and spacer impacting on the top collar is given by

$$\sigma_{max} = \frac{WG}{A_c}$$

where

$W = 5$ lb

$G = 368$ g's

$A_c = 0.51$ in

therefore

$$\sigma_{max} = 3600 \text{ psi}$$

Consequently, the top collar will not buckle.

Fittings.

- Buckling. Using the same formula for the tube portion of the fitting assembly,

$$F_{cr} = \frac{\pi\sigma_y t}{2}\left[\frac{\pi t D}{h_p} + h_p\right]$$

where

$D = 0.25$ in

$t = .035$ in

$$h_p = \pi t\left(\frac{E}{12\sigma_y}\right)^{1/2}$$

$$= 0.52 \text{ in}$$

$$F_c = 1030 \text{ lb}$$

or

$$\sigma_{cr} = 43{,}600 \text{ psi}$$

Therefore, the tube will not buckle below the yield point.

Since the fittings will be protected by the collar, the stress will depend only on the mass of the fitting itself. As a conservative estimate, the maximum stress is given by

$$\sigma_f = \frac{WG}{A}$$

where

$W = 0.040$ lb (total fitting assembly)

$G = 368$ g's

$A = 0.024 \text{ in}^2$

therefore

$$\sigma_f = 610 \text{ psi} < \text{yield}$$

The results of the bottom end drop analysis indicate that the waste container will not yield during this accident.

Side Drop. The container will impact the basket wall for a side drop. For a single container, this side impact force is given by

$$\begin{aligned} F &= WG \\ &= (5)(400) \\ &= 2000 \text{ lb.} \end{aligned}$$

The container/basket interaction is approximated by Roark[23]. The contact stress is given by

$$\sigma_c = 0.798 \left[ \frac{P/LD}{\left[\frac{1-\mu^2}{E}\right]_{AL} + \left[\frac{1-\mu^2}{E}\right]_{SS}} \right]^{1/2}$$

where

$P = 2000$ lb

$L$ = container length = 12.62 in

$D$ = container diameter = 3.0 in

$\mu_{AL} = 0.32$
$\mu_{SS} = 0.3$
$E_{AL} = 10^7$ psi
$E_{SS} = 2.8 \times 10^7$ psi

therefore

$$\sigma_c = 16{,}600 \text{ psi} \quad .$$

This is the contact stress between the container and basket walls. It is a more accurate indication of the maximum stress in the end caps than in the cylinder walls. The reaction of the container walls away from the ends is approximated by Roark[24], (ring supported at its base and loaded by its own weight, w, lb/in of circumference):

$$\sigma_w = \frac{M}{Z}$$

where

$M = 1.5\ w\ R^2$

$w = \frac{2000}{\pi D}$

$= 212$ lb/in-circumference

therefore

$$M = 716 \text{ in-lb}$$

$$Z = \frac{Lt^2}{6}$$

where

$L = 11.12$ in

$t = 0.25$ in

therefore

$$Z = 0.116 \text{ in}^3$$

therefore

$$\sigma_w = 6200 \text{ psi}$$

The maximum stress in the basket walls can be approximated by a beam (Roark[25]), with fixed ends

$$\sigma = \frac{M}{Z}$$

where

$$M = \frac{WL}{8}$$

$$W = \frac{2000}{12.62} = 158 \text{ lb/in}$$

$$L = 3.31 \text{ in (basket width)}$$

therefore

$$M = 66 \text{ in-lb/in}$$

$$Z = \frac{t^2}{6}$$

where

$$t = 0.124 \text{ in (assume basket wall is solid ss)}$$

therefore

$$Z = .00256 \text{ in}^3\text{/in}$$

therefore

$$\sigma = 25{,}800 \text{ psi} \quad .$$

For the actual sandwich plate construction, the stress will be slightly higher, although below yield. Consequently, the basket wall does deflect due to the container impact, which will increase the container/basket wall contact stress area, reducing the contact stress.

The container fittings will be subjected to a bending moment for the side drop. This stress is given by

$$\sigma_F = \frac{M}{Z}$$

where

M = maximum bending moment

Z = minimum section modulus .

The weight of each fitting assembly is 0.040 lb (2.10.5.1). Therefore,

$$M = WLG$$

where

W = .040 lb

L = total fitting length = 2.67 in

G = 400 g's

therefore

$$M = 42.7 \text{ in-lb} \quad .$$

The minimum section modulus is for the tube, given by

$$Z = \frac{\pi}{2R_o} (R_o^4 - R_i^4)$$

where

$R_o$ = 0.125 in

$R_i$ = .090 in

therefore

$$Z = .0022 \text{ in}^3$$

therefore

$\sigma_F$ = 19,000 psi, which is below yield at 300 F (32,800 psi).

The protective collar maximum bending moment is given by

$$M = WGL$$

where

W = 0.174 lb

G = 400 g's

L = 3.5 in

therefore

$$M = 244 \text{ in-lb}$$

$$Z = \pi(\overline{R})^2 t$$

where

t = .065 in

$\overline{R}$ = 1.218 in

therefore

$$Z = 0.303 \text{ in}^3$$

therefore

$$\sigma_{pc} = 805 \text{ psi} < \text{yield}$$

Since all stresses are below yield, the container will survive the side drop.

Corner Drop. The BMI-1 cask has been analyzed for a bottom corner drop which produces a deceleration of 153 g's at an angle of 65° from horizontal. If the stresses are elastic, the corner drop is a superposition of a side and bottom end drop analysis.

The component decelerations are given by

$$g_{side} = 153 \cos \theta = 65 \text{ g's}$$
$$g_{bottom} = 153 \sin \theta = 139 \text{ g's} \quad .$$

From the side drop analysis, the maximum stress in the container is 16,600 psi @ 400 g's. Therefore, for 65 g's, the side component stress is

$$\sigma_{c,side} = 16{,}600\left(\frac{65}{400}\right) = 2200 \text{ psi} \quad .$$

From the bottom end drop analysis, the axial component of the corner drop stress is given by

$$\sigma_{c,end} = 1700\left(\frac{139}{368}\right) = 630 \text{ psi} \quad .$$

If the stresses are combined orthogonally,

$$\sigma_{c,max} = \sqrt{\sigma_{c,side}^{2} + \sigma_{c,end}^{2}}$$

$$= 2300 \text{ psi} < \text{yield}$$

For the top collar,

$$\sigma_{c,side} = 805\left(\frac{65}{400}\right) = 131 \text{ psi}$$

$$\sigma_{c,end} = 3600\left(\frac{139}{368}\right) = 1370 \text{ psi}$$

$$\sigma_{c,max} = 1370 \text{ psi} < \text{yield}$$

For the fittings,

$$\sigma_{c,side} = 19{,}000\left(\frac{65}{400}\right) = 3100 \text{ psi}$$

$$\sigma_{c,end} = 610(\frac{139}{368}) = 230 \text{ psi}$$

$$\sigma_{c,max} = 3110 \text{ psi} < \text{yield}$$

Consequently, the corner drop is less severe than either the side or bottom end drops.

Top end drop. Since the deceleration for the top end drop is much less than for the bottom end drop (Table 2.3), the top end drop stresses will be less severe than those for the bottom end. Consequently, the container does not yield.

(b) Puncture. The maximum impact force that could be generated by the puncture accident is the lesser of the following loads:

i) puncture bar buckling/compression
ii) cask wall shear.

The puncture bar load is given by

$$F_p = \sigma A$$

where

$\sigma$ = 100,000 psi (assumed to be the maximum crushing strength of mild steel)

$A = 28.2 \text{ in}^2$ (6 in diameter bar)

therefore

$$F_p = 2.8 \times 10^6 \text{ lb.}$$

The maximum force required to shear the cask outer shell and lead shielding is give by Marks'[17], p. 13-24

$$F_c = \pi D(\tau_s t_s + \tau_{pb} t_{pb})$$

where

$D$ = bar diameter = 6 in

$\tau$ = shear strength

$t$ = wall thickness.

From Table 2,[21] p. 13-25

$\tau_s$ = 57,000 psi

$\tau_{pb}$ = 3500 psi

From BMI drawing 0001, Rev. B,

$t_s$ = 0.875 in

$t_{pb}$ = 8.0 in

therefore

$$F_c = 1.5 \times 10^6 \text{ lb}$$

The maximum cask puncture deceleration is, therefore, given as

$$G_p = \frac{F_c}{W}$$

where

$W$ = 23,660 lb (p. 1.1)

therefore

$$G_p = 63 \text{ g's} \quad .$$

Since this deceleration is lower than that for any of the free drop orientations, the puncture accident will generate less severe loadings and the container will also not yield.

(c) Fire. After the fire, the container temperature rise, causing an increase in the internal pressure. From section 3.5.4.2, the maximum container temperature is 586 F, three hours after the fire stops. Assuming no change in volume, the maximum pressure is given by

$$P_{fire} = P_o \left( \frac{T_{fire}}{T_o} \right)$$

where

$P_o$ = 14.7 psia
$T_o$ = 530 R
$T_{fire}$ = 1046 R

therefore

$$P_{fire} = 29 \text{ psia}$$
$$= 14.3 \text{ psig} \quad .$$

The maximum container stress due to internal pressure occurs at the corner joint. From Roark[26], the stresses in the cylinder head, and joint can be calculated. This analysis has been performed using the PRSVSL (Section 2.12.4) code. The following input variables were used:

P = internal pressure = 15 psig
$T_1$ = head thickness = 1.0 in
E = elastic modulus = $10^7$ psi
D1A = cylinder wall thickness = 2.5 in
$T_2$ = cylinder wall thickness = 0.25 in
POI = Poisson's Ratio = 0.32 .

The maximum stresses are as follows:

σ(head) = 26 psi
σ(wall) = 83 psi (hoop)
σ(corner) = 222 psi .

Consequently, the container does not yield during the fire accident.

(d) Water Immersion. The container will not experience an increase in internal pressure due to water immersion unless the cask seal leaks. Should this occur, the equivalent external pressure on the container for three feet of water is less than the 25 psig external pressure for normal conditions.

No corrosion effects will occur on the aluminum container and fittings during the time period of this accident.

## 2.11 Baskets

### 2.11.1 Copper Basket for Fermi Fuel Elements

The BMI-1 cask was approved in July, 1964, and given AEC License SNM807 for use in transporting to a reprocessing site 24 spent BRR fuel elements per trip. Information regarding this structural analysis is recorded in Docket Number 70-813 at the AEC.

For the shipment of the Fermi fuel only a different fuel element basket and basket support are required. Drawing Number K5928-5-1 0049 Rev. 5/12/66, describes this modification. The entire assembly inside the cask including the fuel element, basket, and copper shield, has a calculated weight of 1,109 pounds. This assembly is supported by 12, 1/4 inch x 1-1/2 inch x 1-1/2 inch brass angles that extend the entire length of the cask cavity. The yield strength of the architectural bronze used in the angles is

20,000 psi. The cross sectional area of the 12 angles is 8.4 inches$^2$. Since all the side thrust is taken by the cask wall, only the compressive load must be supported by the angles. Thus, the normal stress on the supporting angles is 132 psi. If the loaded cask were to be subjected to some accident condition which would cause the angles to yield, the force on the fuel subassembly would be decreased and the unit displaced toward the point of contact. Axial motion of the unit in the cask should cause no damage to the fuel subassembly. All radial forces would be adequately restricted by the six, 0.75 inch x 2 inch x 36 inch copper ribs which are part of the copper shielding casting. Each rib would have an area of 27 inches$^2$ and a yield strength of 10,000 psi. Applying the entire weight of 1,109 pounds to one rib, the normal stress would be 41 psi. From the above description of the modifications inside the cask, it is obvious that the fuel subassembly is well protected within the cask.

## 2.11.2 BMI-1 Basket Modified for MTR Fuel

The only modifications made for shipment of the fuel from Texas A&M were to the fuel basket. Therefore, the cask itself meets all the structural requirements as shown in current license, SMN7 for the shipment of MTR type fuels. The analyses presented in this section show compliance of the modified basket with the regulations of 10CFR-Part 71. The applicable sections from those regulations affecting licensability of the modified basket are as follows:

Section 71.31(c) General Standards, Lifting Device
Section 71.36(a) Standards for Hypothetical Accident Conditions.

(14) Roark, R. J., Case 25, p 352.

(15) Roark, R. J., p 243.

(16) Roark, R. J., Case 6, p 217.

(17) Baumeister, T., Mark's Standard Handbook for Mechanical Engineers, 7th Ed., McGraw-Hill Book Co., New York, p 13-25 (1966).

(18) RDT F8-9T "Design Basis for Fuel and Irradiations Experiment Resistance to Shock and Vibration in Truck Transport; USERDA, Div. of Reactor Research and Development (February, 1975).

(19) Roark, R. J., Case 33, p. 112.

(20) ASME Boiler and Pressure Vessel Code (1974).

(21) Baker, Kovalevsky, and Rish, Structural Analysis of Shells, McGraw-Hill (1972).

(22) Kirk, J. A., and Overway, N., "One-Shot Shock Absorbers", Machine Design, p. 152 (October 20, 1977).

(23) Roark, R. J., Case 4, p. 320.

(24) Roark, R. J., Case 18, p. 176.

(25) Roark, R. J., Case 31, p. 112.

(26) Roark, R. J., Case 30, p. 307.

## 2.12.2 Results of Cover Lifting Tests

Approved by: W. J. Madia

Battelle
Columbus Laboratories

Project Number 117-5865

Internal Distribution

W. J. Madia
T. R. Emswiler
D. E. Stellrecht
W. J. Gallagher
A. Parsons
D. E. Lozier

Date April 18, 1980

To R. J. Burian

From D. E. Lozier

Subject Testing of Lifting Handle on Cask BMI-1 Lid, February 27, 1980

The lid-lifting handle welded on the lid of cask BMI-1 was tested by attaching cask BCL-3, with its lid in place, to the BMI-1 lid with a chain. The assembly was then lifted off the floor and suspended for 3 minutes by a crane hooked to the BMI-1 lid-lifting handle. The certified weight of cask BCL-3 with lid is 2595 lb., placing a total weight on the lifting handle of >3695 lb. which is in excess of three times the weight of the 1100 lb. lid.

The weld was then checked by liquid dye penetrant in accordance with BCL QA Procedure HL-PP-60 with no defects detected.

DEL/cm

2.12.4 Listing of the PRSVSL Computer Code

```
AM PRSVSL      74/74    OPT=1 TRACE                    FTN 4.8+498          07/11/8

      PROGRAM PRSVSL (INPUT,OUTPUT,TAPE5=INPUT,TAPE6=OUTPUT)
C
C     PROGRAM TO CALCULATE THE STRESSES IN THE HEAD AND THE WALLS OF A CYLINDRIC
C     PRESSURE VESSEL WITH A FLAT HEAD.  EQUATIONS FROM CASE 30 IN TABLE XIII
C     OF ROARK, 4TH ED.  PAGE 307.  USES ALSO CASES 1, 14, AND 15 FROM TABLE XII
C     AND CASES 1 AND 12 FROM TABLE X  PAGE 216.
C
C     PROGRAM ASSUMES THE SAME MATERIAL FOR BOTH THE HEAD AND CYLINDER WALLS.
C
C     INPUT READ ON ONE CARD ON AN  8F10.2  FORMAT.
C
C        P     INTERNAL PRESSURE, PSI
C        DIA   INSIDE DIAMETER OF CYLINDER, INCHES
C        T1    HEAD THICKNESS, INCHES
C        T2    CYLINDER WALL THICKNESS, INCHES
C        XF    MAX DISTANCE FROM HEAD AT WHICH STRESSES ARE TO BE EXAMINED, INCHE
C        XINC  INCREMENT OF DISTANCES FROM HEAD END FOR STRESS EXAMINATION, INCHE
C        E     ELASTIC MODULAS, PSI  (IF BLANK ASSUMES 29.0E6)
C        POI   POISSONS RATIO   (IF BLANK ASSUMES 0.3)
C
C
      REAL MO,LAM,LAMDA
      DD(EE,TT,UN)=EE*TT**3/(12.0-12.0*UN**2)
      LAMDA(UN,RR,TT)=SQRT(SQRT(3.0*(1.0-UN**2)/(RR*TT)**2))
   10 READ (5,501) P,DIA,T1,T2,XF,XINC,E,POI
      IF (EOF(5)) 20,30
   20 STOP
   30 IF (E.LE.0.0) E=29.0E6
      IF (POI.LE.0.0) POI=0.3
      WRITE (6,601) P,DIA,T1,T2,E,POI
      X=0.0
      N=XF/XINC+1
      R=(DIA+T2)/2.0
      D1=DD(E,T1,POI)
      D2=DD(E,T2,POI)
      LAM=LAMDA(POI,R,T2)
      ZA=P*R**3*LAM**2*D2/(4.0*D1*(1.0+POI))
      ZB=2.0*P*R**2*LAM**3*E*T1*D2/(E*T2*(1.0-0.5*POI)*(E*T1+2.0*R*D2*
     1   LAM**3*(1.0-POI)))
      ZC=2.0*LAM+2.0*R*LAM**2*D2/(D1*(1.0+POI))
      ZD=LAM*E*T1/(E*T1+2.0*D2*LAM**3*R*(1.0-POI))
      PRINT *,LAM,ZA,ZB,ZC,ZD
      MO=(ZA+ZB)/(ZC-ZD)
      VO=MO*ZC-ZA
      SC1=P*R/T2
      SCM1=SC1/2.0
      SH1=0.375*P*(R-0.5*T2)**2*(3.+POI)/T1**2
      SH2=-6.0*MO/T1**2
      SH3=VO/T1
      SHT=SH1+SH2+SH3

C       SC1=CYLINDRICAL MEMBRANE HOOP STRESS  EQ1  TABLE XIII
C       SCM1=CYLINDRICAL MERIDIONAL MEMBRANE STRESS  EQ 1  TABLE XIII
```

```
C       SH1,SH2,SH3=HEAD STRESSES   EQS 1, 12 TABLE X  AND  EQ 36  TABLE XIII
C       SHT=TOTAL HEAD STRESS.
C
      WRITE (6,602) MO,VO                                                3
      WRITE (6,603) SH1,SH2,SH3,SHT                                      4
      DO 40 I=1,N                                                        4
      XLAM=X*LAM                                                         4
      SC2=-2.0*VO*(LAM*R*EXP(-XLAM)*COS(XLAM))/T2                        4
      SC3=2.0*LAM**2*R*MO*EXP(-XLAM)*(COS(XLAM)-SIN(XLAM))/T2            4
      SCM4=6.0*VO*EXP(-XLAM)*SIN(XLAM)/(LAM*T2**2)                       4
      SCM5=-6.0*MO*EXP(-XLAM)*(COS(XLAM)+SIN(XLAM))/T2**2                4
      SC4=SCM4*POI                                                       4
      SC5=SCM5*POI                                                       4
      SCTCVX=SC1+SC2+SC3+SC4+SC5                                         4
      SCTCCV=SC1+SC2+SC3-SC4-SC5                                         5
      SCMTCX=SCM1+SCM4+SCM5                                              5
      SCMTCV=SCM1-SCM4-SCM5                                              5
C
C       SC2,SC3=CYLINDRICAL MEMBRANE HOOP STRESSES  EQS 14 AND 15   TABLE XIII
C       SC4,SC5=CYLINDRICAL BENDING HOOP STRESSES  EQS 14 AND 15   TABLE XIII
C       SCM4,SCM5=CYLINDRICAL MERIDIONAL BENDING STRESSES  EQS 14 AND 15 TAB XI
C       SCTCVX=TOTAL HOOP STRESS ON THE CONVEX SURFACE
C       SCTCCV=TOTAL HOOP STRESS ON THE CONCAVE SURFACE
C       SCMTCX=TOTAL MERIDIONAL STRESS ON THE CONVEX SURFACE
C       SCMTCV=TOTAL MERIDIONAL STRESS ON THE CONCAVE SURFACE
C
      WRITE (6,604) X,SC1,SC2,SC3,SC4,SC5,SCTCVX,SCM1,SCM4,SCM5,SCMTCX   5
      WRITE (6,605) SCTCCV,SCMTCV                                        5
   40 X=X+XINC                                                           5
      GO TO 10                                                           5
  501 FORMAT (8F10.2)                                                    5
  601 FORMAT (1H1,30X,72HSTRESSES IN HEAD AND CYLINDERICAL WALLS OF A FL 5
     1AT HEADED PRESSURE VESSEL//32X,8HPRESSURE,9X,F9.0,4H PSI,10X,      5
     2 15HINSIDE DIAMETER,4X,F8.3,3H IN/32X,14HHEAD THICKNESS,5X,F7.3,   6
     3 3H IN,11X,16HCYLINDER WALL TK,4X,F7.3,3H IN/32X,15HELASTIC MODULU 6
     4S,2X,1PE9.3,4H PSI,0P,10X,14HPOISSONS RATIO,5X,F8.3//)             6
  602 FORMAT (32X,10HEND MOMENT,4X,1PE10.3,6H IN-LB,10X,9HEND SHEAR,6X,  6
     1  E10.3,6H LB/IN///)                                              6
  603 FORMAT (61X,13HHEAD STRESSES/61X,13H=============//50X,17HFROM UNI 6
     1FORM LOAD,3X,F10.0,4H PSI/50X,16HFROM EDGE MOMENT,4X,F10.0,4H PSI/ 6
     2 50X,17HFROM RADIAL SHEAR,3X,F10.0,4H PSI/50X,5HTOTAL,15X,F10.0,   6
     3 4H PSI///59X,20HCYLINDRICAL STRESSES/59X,20H===================/  6
     4 42X,13HHOOP STRESSES,32X,19HMERIDIONAL STRESSES/2X,8HDISTANCE,4X, 6
     5 8HMEMBRANE,4X,8HMEMBRANE,4X,8HMEMBRANE4X,7HBENDING,5X,7HBENDING,  7
     6 6X,5HTOTAL,4X,12HFROM UNIFORM,2X,9HFROM EDGE,2X,9HFROM EDGE,5X,
     7 5HTOTAL/2X,8HFROM END,2X,12HFROM UNIFORM,2X,9HFROM EDGE,3X,9HFROM
     8 EDGE,3X,9HFROM EDGE,3X,9HFROM EDGE,4X,6HCONVEX,5X,8HPRESSURE,5X,
     9 5HSHEAR,7X,6HMOMENT,6X,6HCONVEX/5X,2HIN,7X,8HPRESSURE,5X,
     1 5HSHEAR,7X,6HMOMENT,6X,5HSHEAR,7X,6HMOMENT, 5X,7HCONCAVE,41X,
     2 7HCONCAVE//)
  604 FORMAT (2X,F8.3,1X,10(F10.0,2X))
  605 FORMAT (71X,F10.0,38X,F10.0/)
      END
```

(c) TRIGA Fuel

The fission product activity was estimated to be 250 curies per element in November, 1970 (based on radiation measurement made at that time). Assuming 2 MEV per event, the decay heat of the fuel is:

$$250 \text{ curies/element} \times 3.7 \times 10^{10} \text{ events/sec/curie} \times$$
$$2 \text{ MEV/event} \times 1.6 \times 10^{-13} \text{ watts/MEV/sec}$$
$$= 2.96 \text{ watts/element} \quad .$$

The total heat load for the cask is 112.5 watts. This is a very conservative estimate since the fuel has cooled $\sim$2 years and has a cooling factor greater than 3.0. The BMI-1 cask is licensed to handle up to 1.5 kw of decay heat. Thus, the thermal inventory for this shipment is well within the limits for the cask.

(d) PULSTAR Fuel

The average decay heat output per fuel pin at the time of shipment is 5.0 watts and the maximum heat output per pin is 7.0 watts. The heat source for the fully loaded cask will therefore be:

$$252 \frac{\text{pins}}{\text{cask}} \times 5.0 \text{ watts/pin} = 1{,}260 \text{ watts/cask} \quad .$$

Certificate of Compliance Number 5057 approves a heat load of 1.5 kw for the cask.

(e) EPRI Crack Arrest Capsules

The total decay heat generated by the capsule at discharge is 197 watts. The axial heat rate over the height of the capsule is (197)(12)/21.5 = 110 watts/ft. The cask is rated for contents whose decay heat is up to 1,500 watts. The cavity length is 54 inches. Thus, the axial heat rate permitted for the cask is (1,500)(12)/54 = 333 watts/ft. Thus, the decay heat is within permissible levels.

(f) Union Carbide Process Uranium Oxide Container

The total decay heat of the process oxide may vary up to a maximum of 20 watts per container. Thus for a shipment of twenty-four (24) containers, each producing the maximum decay heat, the total heat generation of the contents is 480 watts. This is below the 1500 watt rating of the cask.

(g) Union Carbide Target $U^{235}$ Special Form Capsules

The total decay heat for the $U^{235}$ target material may vary. The number of capsules permitted per shipment shall be limited so that the total aggregate decay heat generation will not exceed 1500 watts, the rating of the BMI-1 cask.

3.1.3 Solar Heat

From Reference (3), p 1,636, the solar heating is:

$$Q = 429T \left[ \varepsilon_H A_H \cos \theta_H + \varepsilon_V A_V \cos \theta_V \right]$$

3.4(a)

where

$T$ = atmospheric transmittance = 0.6
$\varepsilon$ = absorbtivity = 0.5
$A$ = area of surface
$H$. = refers to horizontal surface or top of cask
$V$ = refers to vertical surface or side of cask .

At noon during the summer solstice, at 40 degrees latitude:

$$\cos \theta_H = 0.96$$

$$\cos \theta_V = 0.284 \quad .$$

The outside of the cask is 33 inches in diameter and 72.375 inches in height. Thus:

$$A_H = \frac{\pi}{4} D^2 = 5.93 \text{ feet}^2$$

$$A_V = DH = 16.6 \text{ feet}^2 \text{ (protected area).}$$

The solar heat is:

$$Q = 429(0.6) \left[ (0.5)(5.93)(0.96) + (0.5)(16.6)(0.284) \right]$$

$$= 732 + 607 = 1{,}339 \text{ Btu/hr.} = 0.392 \text{ kw}$$

## 3.2 Summary of Thermal Properties of Materials

The materials' thermophysical properties which were employed are shown in Table 3.1. Also, since it has been well demonstrated that the lead will contract away from the outer shell after casting (fabrication experience indicates a potential gap of 0.060-0.100 inch), the thermal model included a variable air gap (Node 118) which has an effective thermal conductivity that increases with temperature as shown in Figure 3.1.

## 3.3 Technical Specifications of Components

Relief Value - 75 psig

Pressure gauge - 30 in Hg vacuum to 100 psig pressure.

## 3.4 Thermal Evaluation for Normal Conditions of Transport

### 3.4.1 Thermal Model

The analysis for normal operation were performed assuming only radial heat flow from the contents through the cask walls to the environment.

TABLE 3.1 THERMOPHYSICAL PROPERTIES EMPLOYED FOR LEAD, STEEL, AND ALUMINUM

Lead

Density = 705 pounds/feet$^3$
Melting Temperature = 621 F
Latent Heat = 10.5 Btu/pounds

| Temperature, F | Thermal Conductivity, Btu/hr-ft-F | Specific Heat, Btu/lb | Emissivity |
|---|---|---|---|
| 32 | 20.1 | 0.0303 | 1.0 |
| 212 | 19.6 | 0.0315 | 1.0 |
| 572 | 18.0 | 0.0338 | 1.0 |
| 621 | 8.8 | 0.0337 | 1.0 |
| 900 | 8.9 | 0.0326 | 1.0 |

Steel

Density = 488 pounds/feet$^3$
Latent Heat = 120 Btu/lb
Melting Temperature = 1,800 F

| Temperature, F | Thermal Conductivity, Btu/hr-ft-F | Specific Heat, Btu/lb | Emissivity |
|---|---|---|---|
| 32 | 8.0 | 0.11 | 0.8[a], 1.0[b] |
| 212 | 9.4 | 0.11 | 0.8, 1.0 |
| 572 | 10.9 | 0.11 | 0.8, 1.0 |
| 932 | 12.4 | 0.11 | 0.8, 1.0 |
| 1,800 | 15.0 | 0.11 | 0.8, 1.0 |

(a) For steel surface exposed to flame, $\varepsilon = 0.8$.

(b) For steel surfaces viewing each other across internal air gaps, $\varepsilon = 1.0$.

TABLE 3.1 THERMOPHYSICAL PROPERTIES EMPLOYED FOR LEAD, STEEL, AND ALUMINUM (Continued)

Aluminum, 6061-T6

Density = 169 pounds/feet$^3$
Melting Temperature = 1,140 F
Latent Heat - 128 Btu/pounds

| Temperature, F | Thermal Conductivity, Btu/hr-ft-F | Specific Heat, Btu/lb | Emissivity |
|---|---|---|---|
| 77 | 89.5 | 0.214 | 0.15 |
| 600 | 135.0 | 0.214 | 0.15 |

$Fe = 0.167$

$Fa$ = view factor = 1.0

$\sigma = 1.73\ (10^{-9})\ R^4$

$A = 2.09\ ft^2$

$T_1$ = capsule temperature, R

$T_2$ = cask cavity temperature, R

Thus

$$Q_r = 6.04\ (10^{-10})(T_1^{\ 4} - T_2^{\ 4})$$

It is assumed that the $\Delta t$ is about 200 F and that the mean air temperature between the capsule and the cask wall is about 230 F. Then the air properties are:

$k = 0.0188$ Btu/hr ft F

$a = 4.78(10^5)/ft^3$ F

$Pr = 0.68$

$T_1 = 460 + 132 + 200 = 792$ R

$T_2 = 460 + 132 = 592$ R

Substituting the values in the equations above results in the following:

$$Q_{cv} = 186 \text{ Btu/hr}$$

$$Q_r = 163 \text{ Btu/hr}$$

And the total heat flow is 349 Btu/hr = 102 watts. Thus, the capsule temperature for normal transportation is about 332 F.

### 3.4.2.4 Union Carbide Process Uranium Oxide Containers

During normal transport the heat is transferred from the containers to the inner wall of the cask by free air convection and radiation. The length of the internal volume of the containers is approximately 10.75 inches. However, the process oxide contents will fill only about 10 percent of this volume. In order to determine if the axial temperature gradient of the container would be significant for internal heat transfer calculations, an analytical model of a single isolated container was developed, Figure 3.2(a). The model assumed that all the oxide was in a powder bed, 1-inch deep at the bottom of the container. It was further assumed that heat transfer from the oxide bed to the container was by conduction at the oxide-container interface and by radiation from the top of the bed to the inner surface of the container walls. Transfer of heat from the container to the environment was assumed to be by convection only. These assumptions were made for purposes of convenience and are considered conservative. Any convection within the container would tend to decrease the axial temperature difference and "flatten the gradient". The effect of radiation from the outer surface would also be to flatten the gradient. Thus neglecting internal convection and external radiation would tend to result in a higher axial gradient of the container.

The external boundry temperature was estimated as the approximate cavity liner temperature for normal transportation. Its acutal value is of minor significance since the objective of these analyses was to determine the axial temperature gradient and not absolute values. The problem was solved using the TRUMP computer program[7]. Properties for the $UO_2$ powder bed are as follows:

Node 1: $UO_2$ Powder; 20 Watts decay heat
Nodes 9 to 22: 6061-T6 Aluminum

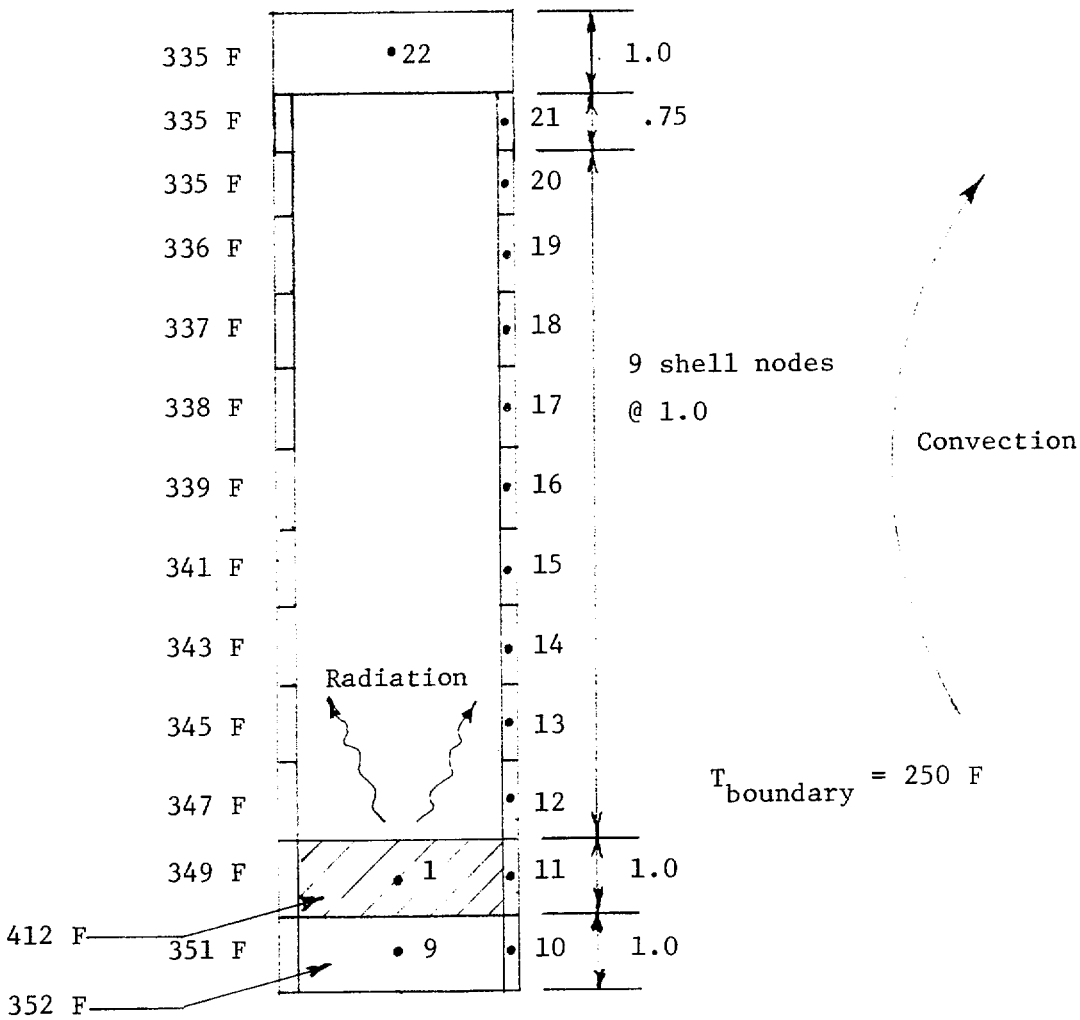


Figure 3.2(a) Analytical Thermal Model of Union Carbide Process Uranium Oxide Container and Steady-State Temperature Profile

$UO_2$ powder: emissivity = 0.9

Conductivity

| Temperature, F | Value, BTU/hr-ft-F |
|---|---|
| 500 | 1.45 |
| 1000 | 1.27 |
| 1500 | 1.15 |

Interface Conductance

| Node Interface | Value, BTU/hr-ft$^2$-F |
|---|---|
| 1 to 9 | 34 |
| 1 to 11 | 14 |

The results of the analyses shown on Figure 3.2(a) indicate that there is only a 16 F temperature gradient along the length of the container. Thus, if in subsequent internal heat transfer calculations, the container is assumed to be isothermal, the resulting error would be only about 8 F.

The BMI-1 cask currently is designed for shipment in which two baskets, stacked one on the other, are used to transport MTR type fuel elements. Each basket can carry twelve (12) elements. It is planned to use these baskets to hold the Union Carbide process oxide containers. Thus a maximum of twenty-four (24) containers can be shipped. The maximum decay heat from the oxide in each container is 20 watts. Thus, the total decay for 24 containers is 480 watts.

The temperature of the cask and containers during normal transportation was determined by analyses using the TRUMP[7] computer program. A steady state thermal analyses of the BMI-1 cask was initially performed to obtain the cavity liner (wall) temperature. The analytical model of the cask is shown in Figure 3.2(b). The sketch of Figure 3.2(b) shows a longitudinal section of the model which consisted of concentric steel and lead nodes as shown.

The 480 watts decay heat was applied uniformly to the cavity walls along a 25.50 inch axial length (equal to the length of two containers without the collars). All heat flow through the cask walls to the environment was assumed to be radial.

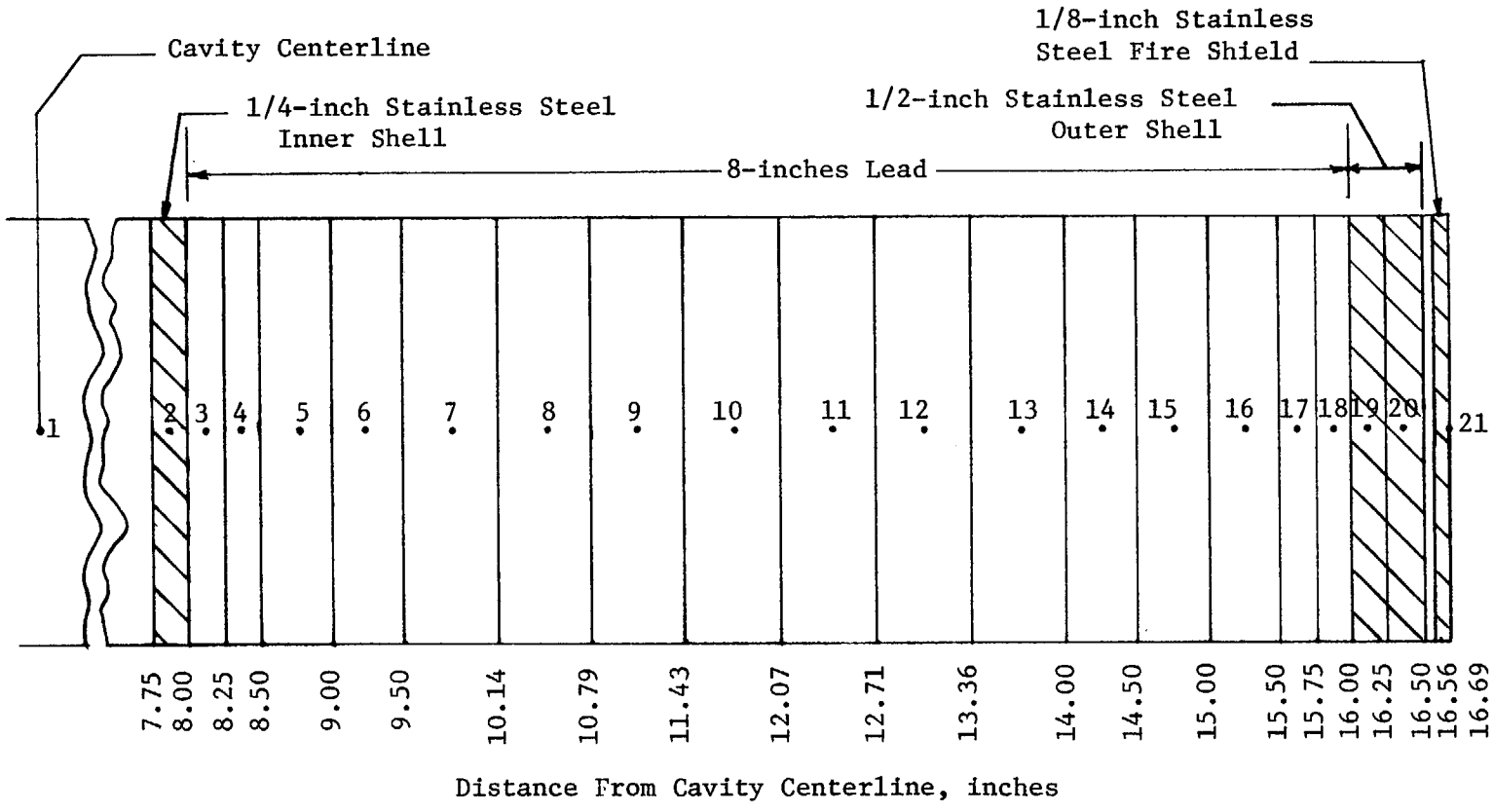


Figure 3.2(b) Thermal Model of Cask

This is conservative since the cavity is 54 inches long and the 28.5 inches of cavity length as well as the cask ends are neglected for heat transfer from the contents through the cask walls and to the environment.

The solar heat load, from Section 3.4.2.1(a) was taken as 80.9 BTU/hr-ft$^2$ and the surface emissivity was taken as 0.5 The ambient temperature was taken as 100 F, the temperature permitted for the start of the hypothetical fire accident. With this ambient temperature the cask cavity liner temperature was calculated to be 227 F. If the ambient were 130 F, the cavity liner temperature would be approximately 30 F greater or 257 F.

The model for determining the temperature of the containers within the baskets is shown in Figure 3.2(c). The model considered radiation and free air convection heat transfer between the containers and the liner. Heat transfer by convection from the containers to the cavity liner was expressed by

$$Q = h_c A_c (T_c - T_w)$$

where

$h_c$ = heat transfer coefficient
$A_c$ = heat transfer area
$T_c$ = container temperature
$T_w$ = cavity liner temperature.

The heat transfer coefficient, $h_c$, was defined by:

$$H_c = 0.29 \left( \frac{T_c - T_w}{L} \right)^{0.25} \qquad \text{(Reference 8)}$$

The equation is part of the TRUMP program. Radiation between the container, and between the containers and the cavity wall was accounted for using the procedure and data presented below in Section 3.5.4.2(a), (pages 3.34 to 3.36).

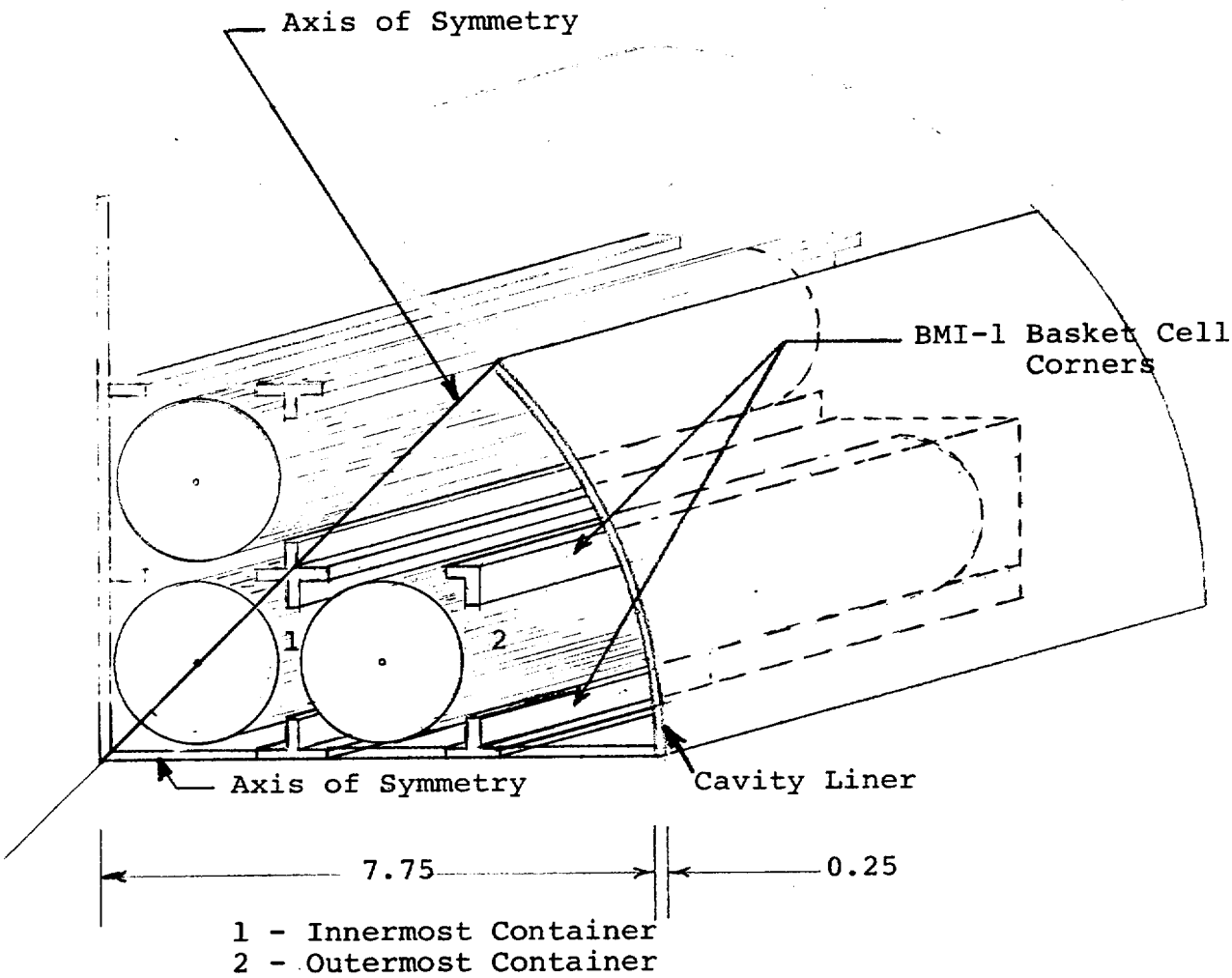


Figure 3.2(c) Sketch of Thermal Model of Union Carbide Process Uranium Oxide Containers in BMI-1 Basket

The analyses indicate that the following temperatures exist:

| | | |
|---|---|---|
| Ambient: | 100F | 130F |
| Cavity wall: | 227F | 257F |
| Outer most containers: | 253F | 283F |
| Inner most containers: | 305F | 335F |

### 3.4.2.5 Union Carbide Target $U^{235}$ Special Form Capsules

The maximum heat that the aggregate of up to twenty-four special form capsules shipped may generate is 1500 watts. However, the amount of decay heat within the capsules may vary. Thus, analyses were performed to show that in the limit case, a single capsule could be shipped in which the total decay heat of 1500 watts is concentrated.

The surface temperature of the cask and capsule during normal transportation was determined by analysis using the TRUMP computer program. The cavity liner temperature was obtained from an analysis using the model shown in Figure 3.2(b). It was assumed that the 1500 watts of heat would be rejected by the cask over only 18 inches of axial length, the same as the length of the special form capsule. This assumption made for convenience is very conservative and will result in higher cask temperatures than if credit were taken for "smearing" the heat over the full 54 inches of the cask cavity plus the ends. The analyses show that for a 100 F ambient temperature, the 1500 watt decay heat applied over 18-inches of the cask length would result in a cavity liner temperature of 398 F. For a 130 F ambient temperature, the liner temperature would be about 428 F.

The temperature of the special form capsule and the basket was determined using the analytical model shown in Figure 3.2(d).

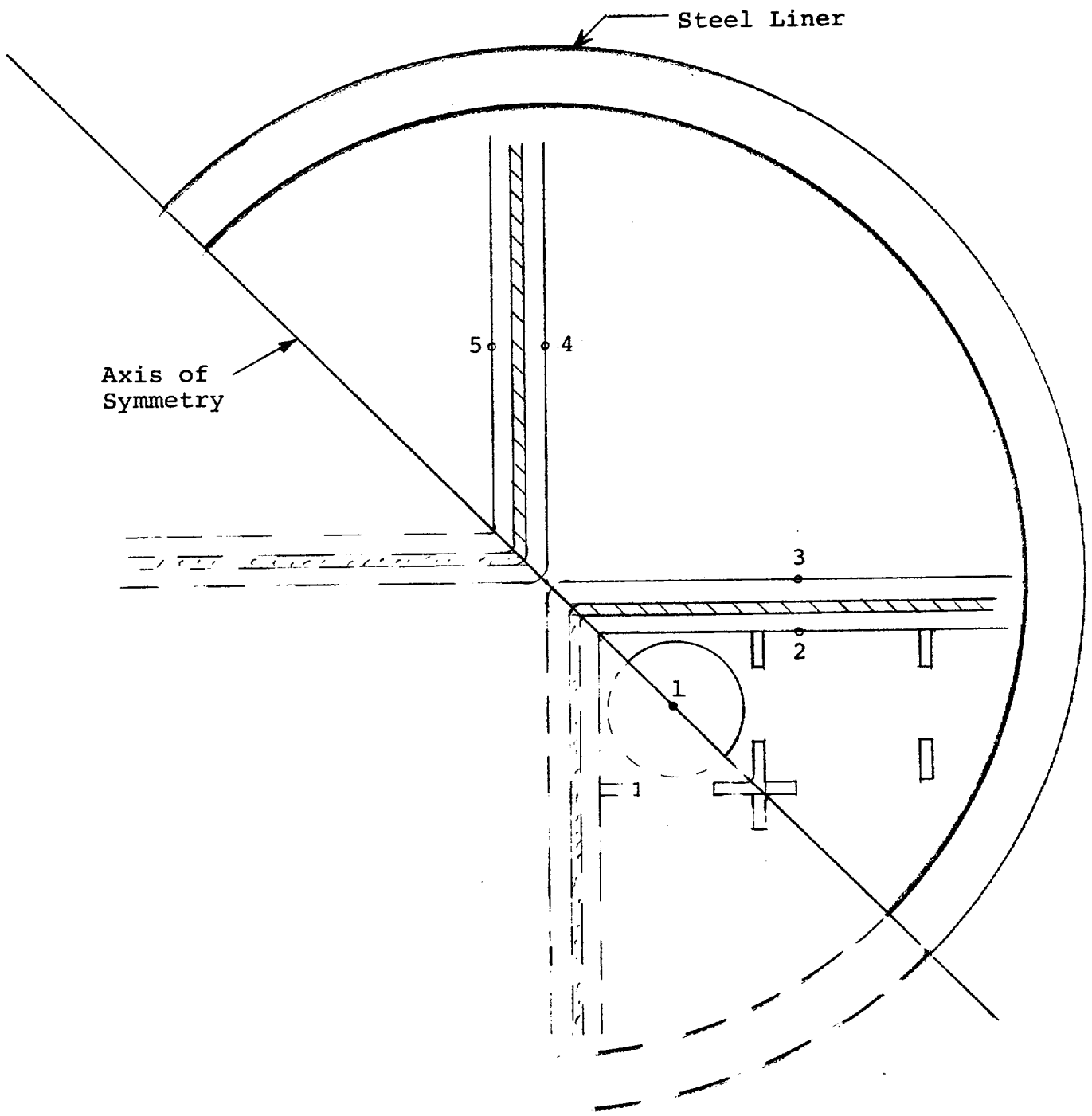


Figure 3.2(d) Analytical Thermal Model of Union Carbide Target $U^{235}$ Special Form Capsule in BMI-1 Cask

The capsule is assumed located in one of the four innermost basket positions. This assumption will result in the highest capsule and basket temperatures. The capsule is centered in the basket cell by an open structure similar to that shown in Figure 3.2(e). This open structure will hold the capsule in place while permitting free radiation and convection heat transfer. The model is two dimensional, i.e., heat flow is considered radially and tangentially (angularly) within the cavity and basket but not axially. Thus, the entire 1500 watts is assumed to be transferred to the cask cavity, through the walls and to the environment within the 18-inch axial dimension of the capsule. This is very conservative since it neglects the axial distribution of heat within the cavity and basket which will significantly decrease the capsule temperature.

Because of symmetry of the cask cavity, only one-half of the cavity cross section was modeled. Natural convection heat transfer within enclosed spaces, especially between Nodes 2 and 3 and between Nodes 4 and 5 is conduction controlled. Nodes 2 and 3, and 4 and 5 form sandwiches around the boral poison plates. The resistance to heat flow through the boral was considered small compared to the interface conductance between the sandwich faces (Nodes 2 and 3 for example) and the boral plate. Therefore, the boral was not modeled. Rather an interface conductance for two 0.010 inch thick (assumed) air gaps (between the stainless steel plates and the boral) was used between the sandwich faces. These values are represented by the expression

$$h_c = k/x$$

where

k = conductivity of air

x = gap thickness.

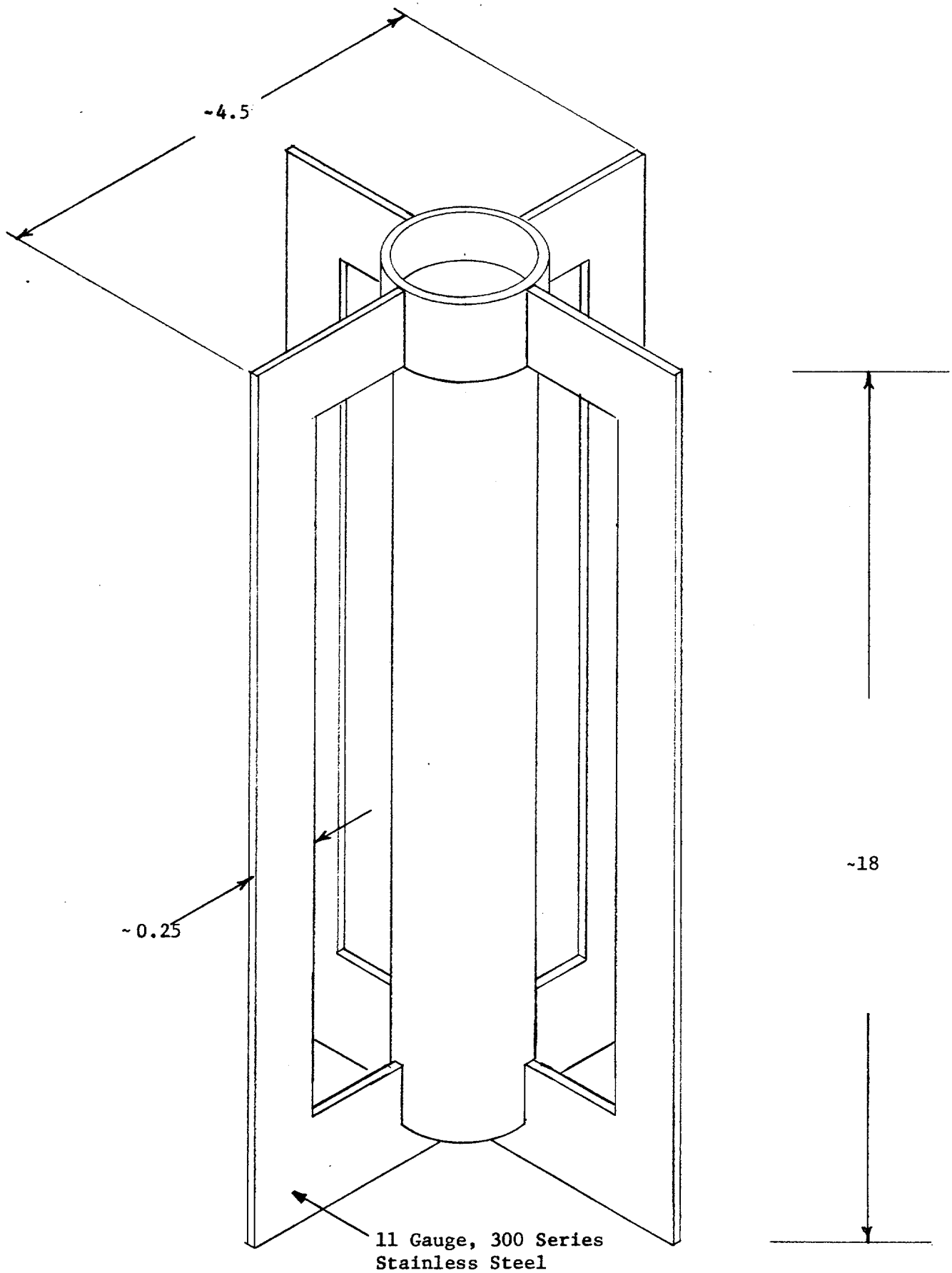


Figure 3.2(e) Sketch of Typical Rack for Supporting Union Carbide $U^{235}$ Special Form Capsule in BMI-1 Basket.

For radiation heat transfer between the sandwich plates and the cavity liner, the plates and liner were treated as parallel planes, view factor = 1.0. For radiation between the two perpendicular sandwich plates, the view factors for perpendicular planes was used (0.39).

The results indicate that the maximum capsule temperature for normal transportation (130 F) will be 1290 F. This is well below the 1475 F temperature which the capsule must be able to withstand in order to be certified as a special form capsule.

### 3.4.3 Minimum Temperatures

From Section 3.4.2.1(c), the minimum water temperature is 192.9 - 4.3 = 188.6 F for an ambient temperature ($T_a$) of 100 F and a decay heat load (Q) of 3,480 Btu/hr. With no solar load, the water temperature is 180 F. For other values of $T_a$ and Q, the water temperature (T) is approximately:

$$T = (180 - 100)\left(\frac{Q}{3,480}\right) + T_a \quad .$$

The water will freeze when T = 32 F, or $T_a$ = 32 - Q/43.5. The water will not freeze at an ambient temperature of $T_a$ = -20 F if the decay heat is greater than Q = 2,260 Btu/hr = 0.662 kw. When these conditions are satisfied, no antifreeze is needed in the water.

In later shipments it is expected that the temperature drop across the cask wall will decrease due to settling of the lead and closing of the air gap between the lead and outer steel shell. In this case, the water temperature may decrease from 180 F to about 160 F under normal conditions. Thus, in later shipments the decay heat will have to be over Q = 0.88 kw to prevent freezing at $T_a$ = -20 F. Provisions will be made to cover the cask with a canvas blanket (which will decrease heat transfer from the outer surface) when ambient temperatures and cask internal temperatures indicate the possibility of freezing.

### 3.4.4 Maximum Internal Pressures

The design pressure of this cask is 100 psig so that the maximum permissible operating pressure is 50 psig. The maximum operating temperature (230 F) is 68 F below the boiling point (298 F) at the maximum permissible operating pressure.

(d) Union Carbide Process Uranium Oxide Container

The models shown above in Figures 3.2(b) and 3.2(c) were used to determine the temperature of the cask and contents during the hypothetical accident. The hypothetical accident was defined as a radiant heat source having a temperature of 1475 F and an effective emissivity of 0.9. Initially, a thermal transient analysis was performed for the fueled shipping cask (absorptivity = 0.8) to determine cavity liner temperature as a function of time. No solar heat load was included during the 30 minute fire. The resulting temperature/time profile was then used as the boundary condition in the contents/cavity transient thermal simulation.

The results of the analyses, shown in Figure 3.8(a), indicate that the cavity wall of the cask reaches a peak temperature about 1 hour after the start of the hypothetical fire and then cools rapidly. The temperatures of the capsules continue to "coast up", however, peaking about 3 hours after the start of the fire. The maximum temperature of about 586 F is acceptable for the 6061-T6 aluminum alloy from which the containers are made. The structural condition of the container is considered in Section 2.0.

(e) Union Carbide Target $U^{235}$ Special Form Capsule

The models shown above in Figures 3.2(b) and 3.2(d) were used to determine the temperature of the cask and contents during the hypothetical fire accident. The cavity liner temperature/time profile was obtained from thermal analysis of the entire cask and used as the input boundary condition to determine the capsule temperature/time profile. The conditions for the "fire" were as used for analyses of the Union Carbide process oxide containers, Section 3.5.4.2(d).

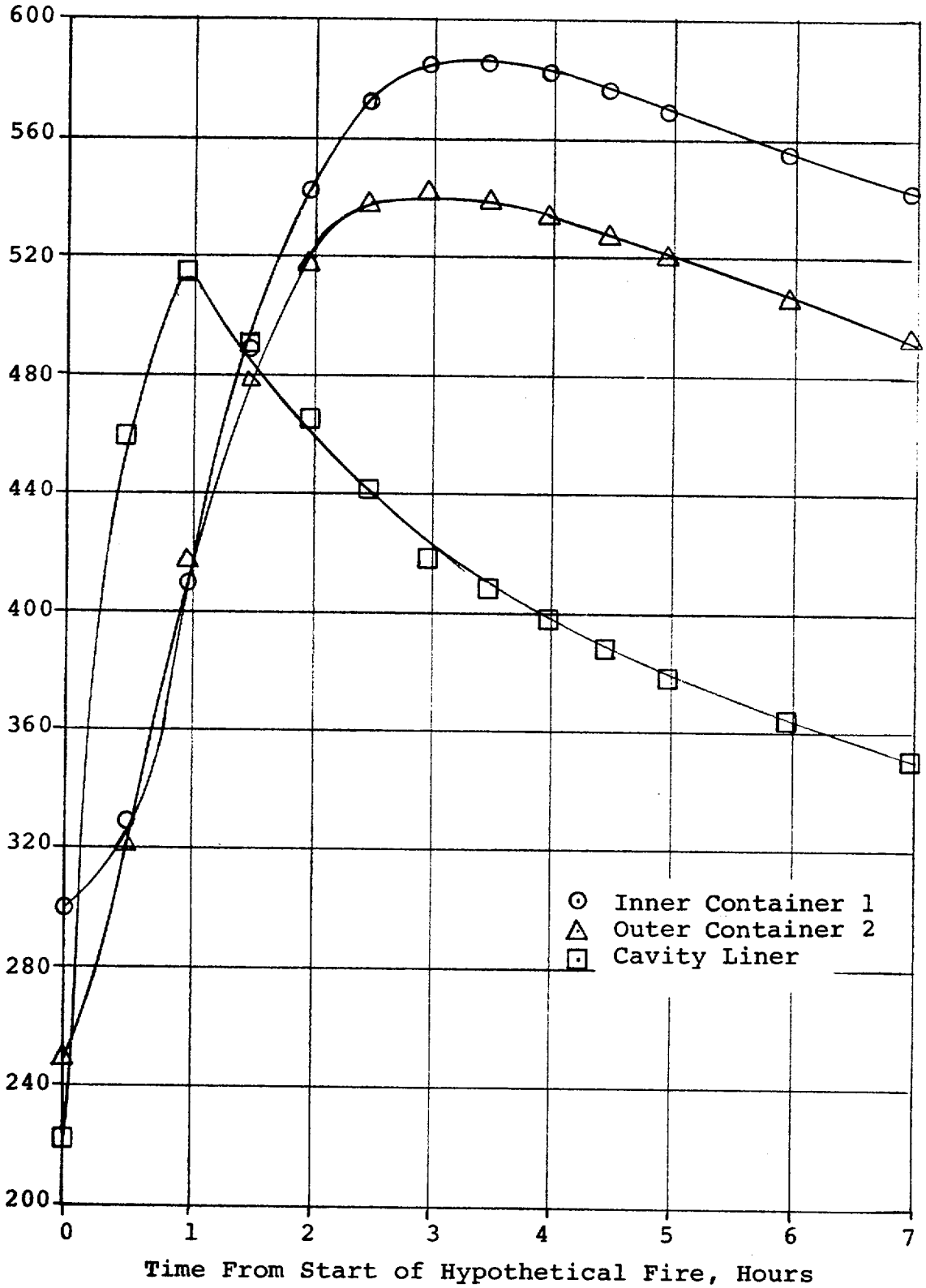


Figure 3.8(a) Calculated Thermal History Union Carbide Process Uranium Oxide Canisters in the Basket of the BMI-1 Cask

The results of the analyses, shown in Figure 3.8(b), indicate that the capsule reaches a maximum temperature of 1325 F about 1 hour after the start of the hypothetical fire. This is well below the temperature of 1475 F which the capsule must withstand in order to be certified as a special form capsule. The stainless steel shells of the basket experience a maximum temperature of 785 F. This is acceptable for stainless steel and is well below the melting temperature of the aluminum matrix of the boral sandwiched between the stainless steel shells. At these temperatures aluminum has sufficient strength to resist "slumping" due to its own weight. Moreover, the stainless boral sandwich is fabricated with stainless pins extending through the boral and welded to the two stainless shells. This reinforcement will prevent "bulging" of the shells due to the elevated temperature and thus also help keep the boral from shifting.

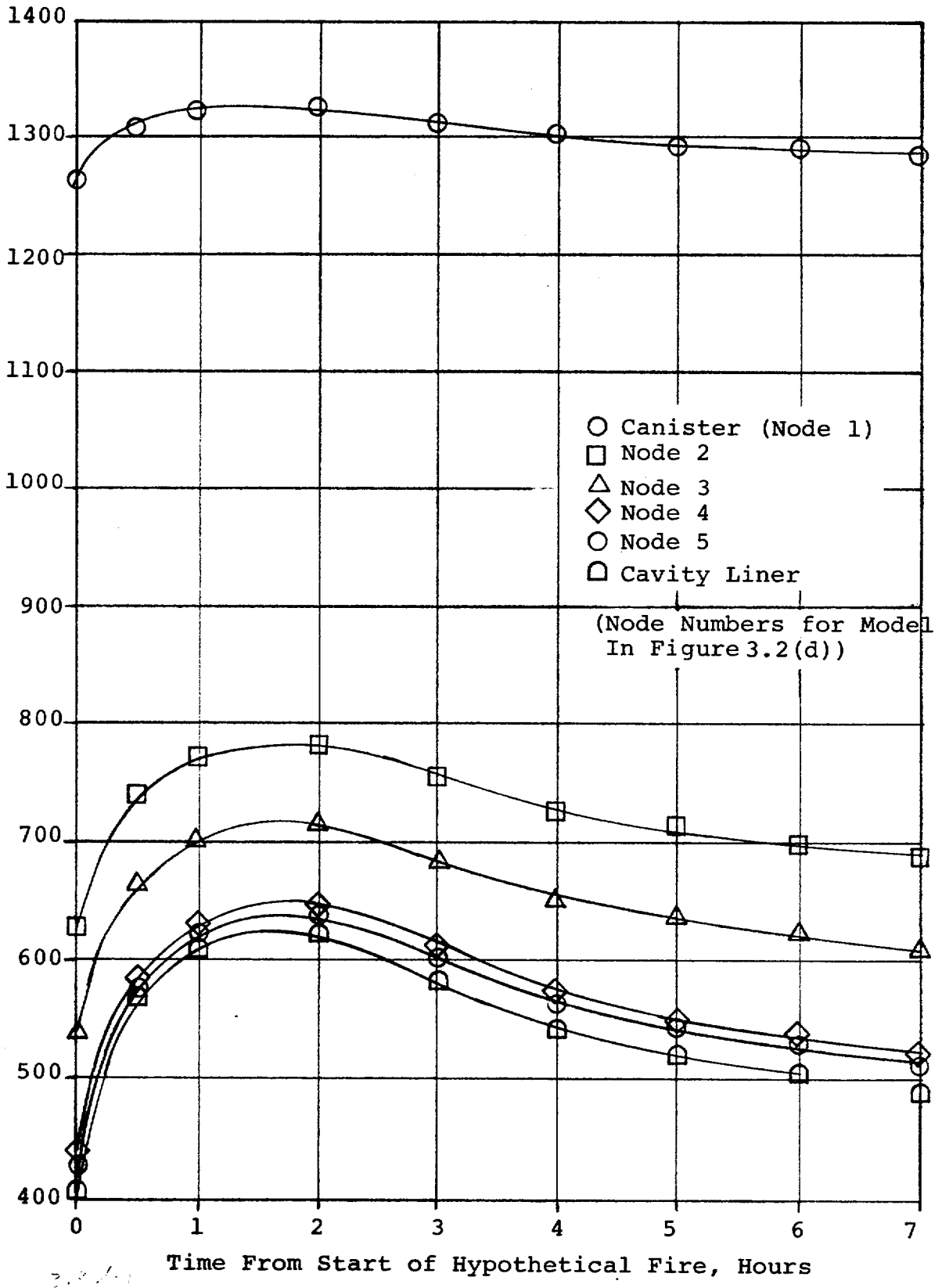


Figure 3.8(b) Calculated Thermal History for a Special Form Capsule with Decay Heat of 1500 Watts in the Innermost Position in the Basket of the BMI-1 Cask

## 3.6 Appendix

### 3.6.1 References

(1) J. O. Blomeke and M. F. Todd, "U-235 Fission Product Production as a Function of Flux, Irradiation Time, and Decay Time", ORNL-2127, Part I, Vol 2 (1957).

(2) Nims, J. B., "Generalized Subassembly Decay Heat Curves", APDA Memo P-64-11, January 14, 1964.

(3) L. S. Marks, "Marks' Handbook", McGraw-Hill, Inc. 5th Ed. (1951).

(4) W. H. McAdams, "Heat Transmission", McGraw-Hill, 3rd Ed. (1954).

(5) R. O. Wooton and H. M. Epstein, "Heat Transfer from a Parallel Rod Fuel Element in a Shipping Container", to be published, Battelle Memorial Institute (1963).

(6) McAdams, W. H. p 181, Eq7-9b.

(7) Edwards, A. L., "TRUMP: A Computer Program for Transient and Steady-State Temperature Distributions in Multidimensional Systems", UCRL-14754, Rev. 3., Lawrence Livermore Laboratory, September 1, 1972.

### 3.6.2 Experimental Tests of Copper Shot

The shipment of an Enrico Fermi Core-A fuel subassembly with a decay heat output of 1.5 kw requires a heat transfer medium which remains in the cask under all conditions to prevent excessive fuel temperatures. Copper shot was considered to offer the most promise for this application.* To test this concept, experiments were performed with an actual Enrico Fermi Core-A fuel subassembly and a dummy subassembly fabricated using electrical resistance heaters to simulate fuel pins. The experiments were designed to investigate the thermal conductance of shot beds as applied to the Fermi fuel shipment. Details of these experiments and the results are discussed below.

#### 3.6.2.1 Thermal Tests

A simulated fuel subassembly was constructed using actual cross-sectional dimensions including the proposed shipping basket. The unit had 12 inches of active length and thermal insulation was employed on the bottom to decrease the axial heat loss. The zirconium clad fuel pins were represented by stainless steel sheathed, magnesium oxide insulated, nichrome wire resistance heaters. These resistance heater pins had the same diameter (0.156-inch OD) as the Fermi fuel pins and were spaced on the same center to center distances as the Fermi fuel pins. The 18-ga. nichrome wire in the heater pins had a resistance of one ohm per foot and the radial heat transfer characteristics of the heater pin was calculated to be slightly less than that of Fermi fuel pins.

---

* This cooling concept is being patented by the Edward Lead Company, of Columbus, Ohio.

## 6.3 Criticality Evaluation for BRR Fuel Elements

### 6.3.1 Package Fuel Loading

The modified BMI-1 shipping cask is a cylindrical, double-walled stainless-steel vessel, in which the space between the inner and outer shells is occupied by lead shielding. Fuel assemblies are positioned within the central cavity by two identical stainless-steel clad boral plates acting as center dividers as shown in Drawing 0004, Rev. B.

For this analysis, BRR fuel elements with 200 g of U-235 were considered. Each is 3.16 x 3.00 x 23.25 in., fueled length. A description of a standard fuel assembly for Battelle's Research Reactor is given in Figure 6.4. Each fuel assembly is a heterogeneous mixture of Al, $H_2O$, U-235, and U-238. The composition of a BRR fuel element is given in Table 6.3.

TABLE 6.3. COMPOSITION OF BRR'S FUEL ASSEMBLY

| Material | Weight, gm | Atoms or Molecules per cc (Volume Homogenized) |
|---|---|---|
| $H_2O$ | 2725 | $2.5253 \times 10^{22}$ |
| Al | 2780 | $1.7188 \times 10^{22}$ |
| U-235 | 200 | $1.41 \times 10^{20}$ |
| U-238 | 15 | $1.05 \times 10^{19}$ |

A cross section of BMI-1 shipping cask's fuel basket is shown graphically in Figure 6.5 and in detail in Drawing 0004. This is the fuel basket used to ship the fuel element assemblies. The dimensions of each of the 12 cavities are 3.34 x 3.34 in. The fuel assemblies are shipped into these cavities.

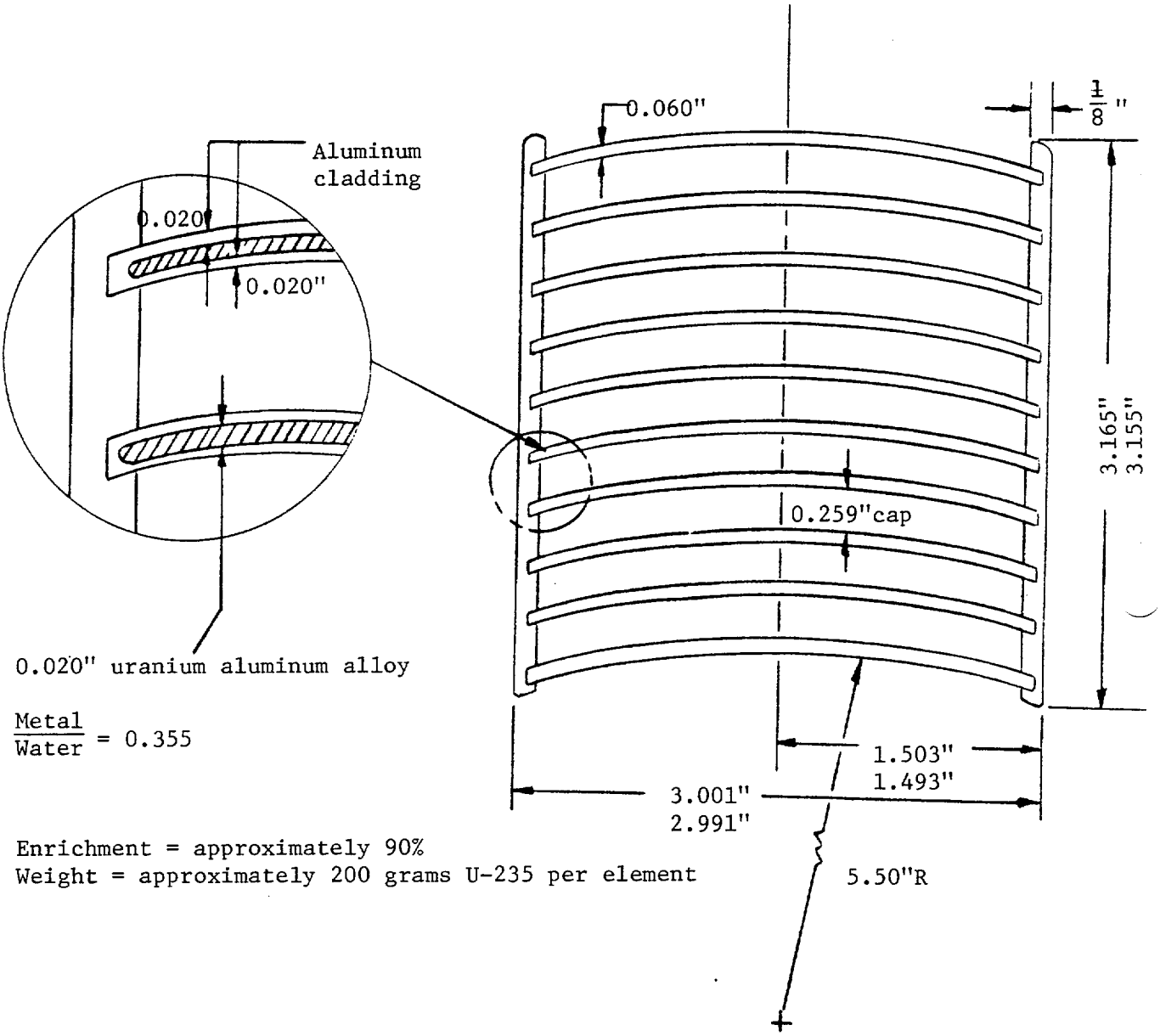


FIGURE 6.4. STANDARD FUEL ASSEMBLY FOR BATTELLE RESEARCH REACTOR

## 6.8 Criticality Evaluation for Union Carbide Process Uranium Oxide

### 6.8.1 Package Fuel Loading

The process uranium oxide is formed by pyrolyses within the process container. The containers are nominally 2.50-inches I.D. and 11.75-inches internal length. They are made entirely of 6061-T6 aluminum alloy and sealed dry. The oxide may be in flake or powder form. Due to the manner in which it is formed directly in the container its distribution is random, i.e., although the major portion will be in a bed at the bottom of the container, some powder will adhere to the walls of the container.

The product may include a mixture of oxides of uranium. For purposes of analysis it was assumed that the oxide is in the form of $UO_2$ which would have the greatest percentage of uranium per unit weight of oxide. Analyses were done on the basis of 400 grams of $UO_2$ powder which for the 93 percent enrichment represents 352 grams of $U^{235}$.

### 6.8.2 Normal Conditions

The shipments are to be made dry. The total mass of U-235 in 24 process uranium oxide containers, each containing 400 grams of $U(93)O_2$ is 9.088 kg. The minimum critical mass of fully reflected U-235 is 22.8 kg. Thus, even for two dry packages in contact and reflected on all sides by water, $k_{eff} < 1$.

In the case where some or all of the containers are replaced by MTR fuel elements the total mass of U-235 is smaller than in the above case since each fuel element contains only 200 grams of U-235. Thus, shipments of containers with 400 grams of $U(93)O_2$ interspersed among MTR fuel elements and fully reflected by water will have $k_{eff} < 1$.

### 6.8.3 Accident Conditions

#### 6.8.3.1 Calculational Model (Process Uranium Oxide Only)

Under accident conditions for Fissile Class III materials, one shipment of packages is to remain subcritical with optimum hydrogenous moderation and close reflection by water.

Consider first the transport of 24 Union Carbide process uranium oxide containers carrying equal amounts (from 200 grams to 400 grams) of $U(93)O_2$ powder. To determine when optimum moderation occurs KENO calculations were done for the cases where each container carries 200, 300, and 400 grams of $UO_2$ powder and where, in each case, the remainder of the container is filled with water. Also, KENO calculations were done for the cases where each container carries either 200 grams or 400 grams of $UO_2$ powder and the containers are filled to approximately 7/10 of their capacity with water. All of these calculations were done using the 123 group neutron structure available with the AMPX-1 modular code system. This consists of the 93 GAM-II groups combined with a 30 group THERMOS structure below 1.89 ev. Although the amount of U-238 in these loadings was very small, NITAWL runs were made to correct for resonance self-shielding in each of the cases. The KENO calculation was done using the

mixed-box option of KENO geometry. The reflective plane capabilities of KENO were used so that only one quadrant of the geometry had to be modelled, i.e., reflective planes were used at tye x-z plane, at the x-y plane, and at the y-z plane. Figure 6.13 shows a horizontal cross-section of the loaded BMI-1 shipping cask fully reflected by water. Figure 6.14 shows a vertical cross-section of box types 1, 2, and 3. In these cases the fuel basket and the cask are void.

### 6.8.3.2 Package Regional Densities

The KENO calculation requires as input the number densities of six mixtures. These are the homogenized $UO_2$-$H_2O$ mixture, stainless steel, aluminum, the boral poison plates, the lead shield, and the water moderator and reflector.

The $UO_2$ powder was assumed to have a density of 7.56, i.e., about 0.7 times that of normal $UO_2$. The molecular weight of 93 percent enriched uranium was taken to be 235.21 and that of $U(93)O_2$ was taken to be 267.21. The number densities for the aqueous solutions of water for the 5 cases considered above are given in Table 6.10. Also in the table are shown the H/U235 atomic ratios for the cases.

TABLE 6.10. NUMBER OF ATOMS PER CC IN THE AQUEOUS SOLUTIONS OF $UO_2$

| Case | 200 g Container[a] | 200 g Container[b] | 300 g Container[a] | 400 g Container[a] | 400 g Container[b] |
|---|---|---|---|---|---|
| H/U Atomic ratio | 134 | 96 | 88 | 65 | 46 |
| Element | | | | | |
| U-235 | 0.0004853 | 0.0006664 | 0.0007279 | 0.0009705 | 0.0013328 |
| U-238 | 0.0000361 | 0.0000495 | 0.0000541 | 0.0000721 | 0.0000990 |
| H | 0.0648160 | 0.0640520 | 0.0637940 | 0.0627700 | 0.061640 |
| O | 0.0334507 | 0.0334580 | 0.0334610 | 0.0334703 | 0.0334960 |

(a) Water filled.
(b) 0.73 water filled.

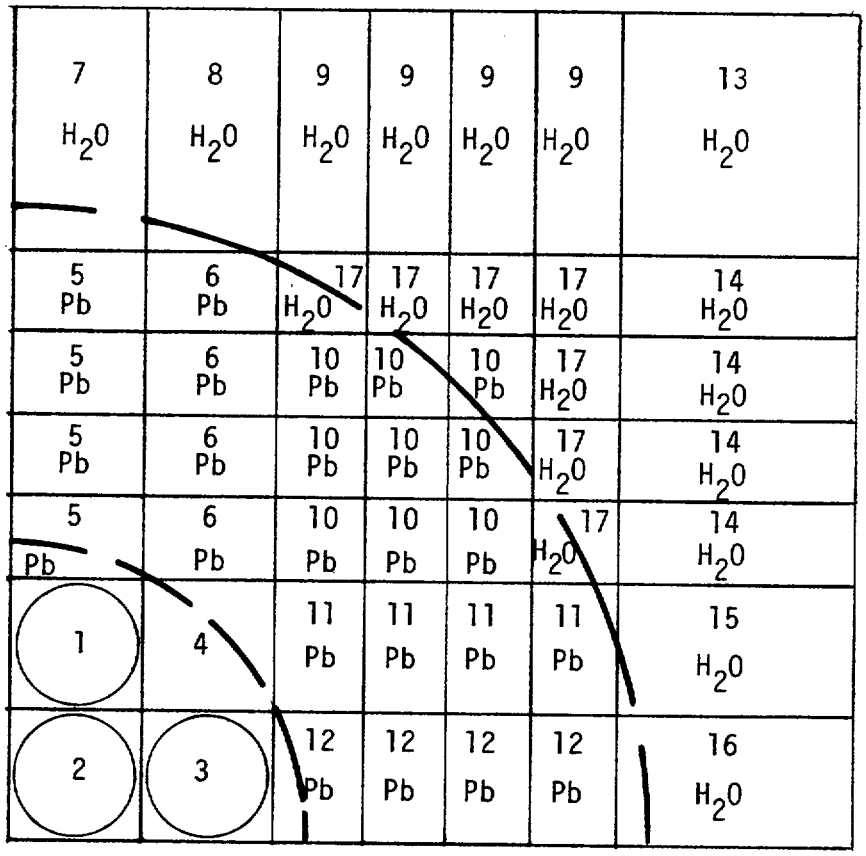


(Numbers Refer to Box-Type)

Figure 6.13. Horizontal Cross-Section of Loaded Cask

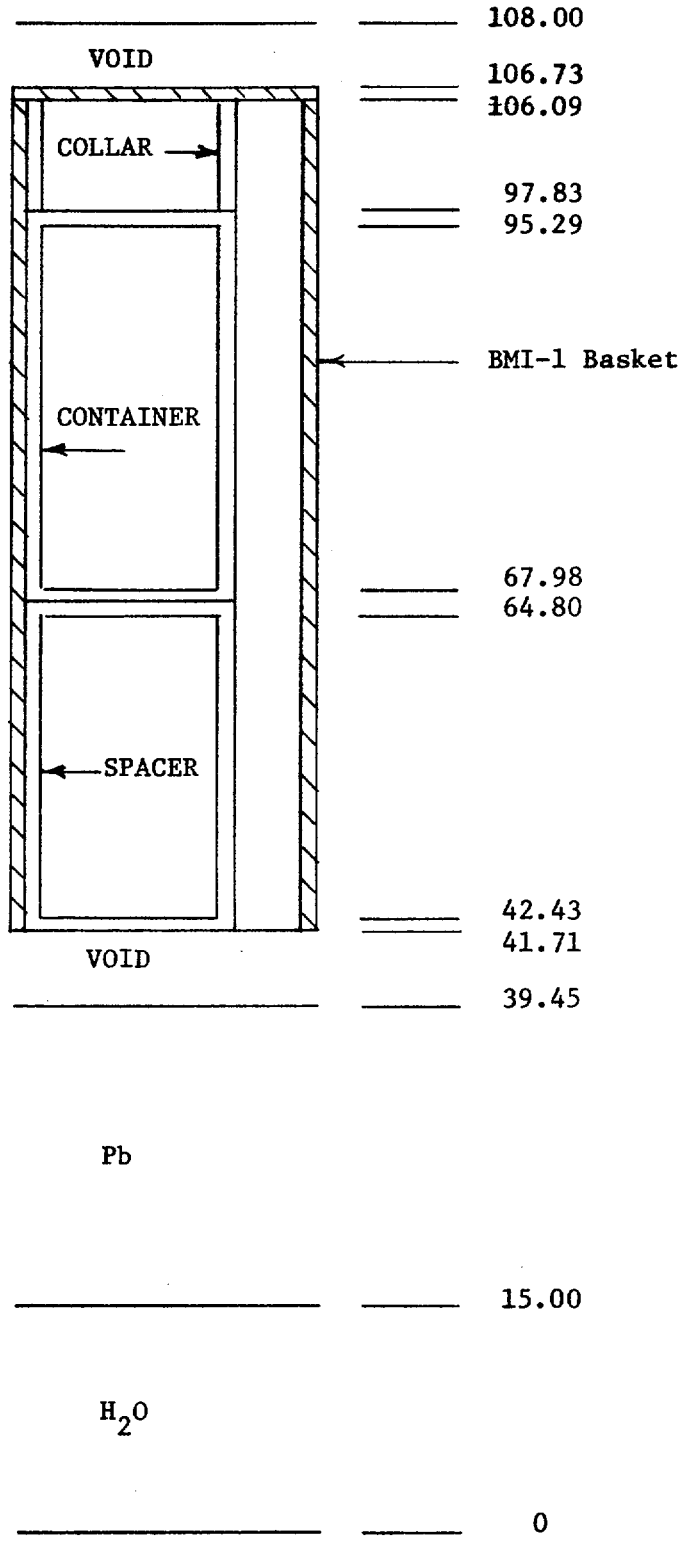


Figure 6.14 Vertical Cross-Section of Loaded Cask Box Types 1, 2, and 3 in a Void Cask

The stainless steel is a mixture of 3.0 percent silicon, 19.0 percent chromium, 2.0 percent manganese, 67.0 percent iron, and 9.0 percent nickel with a density of 7.92 grams/cc. The resultant number densities are given in Table 6.11.

TABLE 6.11. NUMBER OF ATOMS PER CC IN STAINLESS STEEL

| Element | $N \times 10^{24}$ |
|---|---|
| Si | 0.005100 |
| Cr | 0.017426 |
| Mn | 0.001737 |
| Fe | 0.057226 |
| Ni | 0.007315 |

Aluminum has a density of 2.7 g/cc and a molecular weight of 27 resulting in a number density of 0.06023 atoms/cc x $10^{24}$.

Number densities for poison boral plates, lead, and water have previously been listed on Pages 6.36 and 6.37.

The results of these calculations are shown in Table 6.12. As can be seen from these results, the most reactive loading occurs for the 400 grams/container (water filled) case. These calculations are conservative because they assume that the containers in the top basket were misloaded so that the containers are in the bottom of the basket with the spacers above, whereas in the bottom basket the containers are properly loaded at the top with the spacers beneath. This places the two groups of twelve containers in closer proximity than for a normal loading condition.

The results of flooding the inside of the shipping cask must also be determined. Therefore, KENO calculations were made for the case where all void regions inside the cask are replaced with water. Only the two more reactive of the previous loadings were considered, i.e., 300 grams/container (water filled) and 400 grams/container (water filled). These results are also given in Table 6.12. As seen from these results the desired loadings will at all times be subcritical.

TABLE 6.12. KENO RESULTS FOR VARIOUS BMI-1 SHIPPING CASK LOADINGS

| Case | H/U235 | $K_{eff}$ |
|---|---|---|
| 24 - 200 gram/container (water filled) - void cask | 134 | 0.681 ± 0.013 |
| 24 - 200 gram/container (0.73 water filled) - void cask | 96 | 0.632 ± 0.010 |
| 24 - 300 gram/container (water filled) - void cask | 88 | 0.738 ± 0.014 |
| 24 - 400 gram/container (water filled) - void cask | 65 | 0.762 ± 0.008 |
| 24 - 400 gram/container (0.73 water filled) - void cask | 46 | 0.694 ± 0.009 |
| 24 - 300 gram/container (water filled) - flooded cask | | 0.833 ± 0.011 |
| 24 - 400 gram/container (water filled) - flooded cask | | 0.825 ± 0.010 |
| 16 - 400 gram/container (water filled)<br>8 - MTR fuel elements (water filled) - flooded cask | | 0.810 ± 0.010 |
| 24 - MTR fuel elements (water filled) - flooded cask | | 0.862 ± 0.008 |

### 6.8.3.3 Calculational Model (Process Uranium Oxide Containers with Interspersed MTR Fuel Elements)

Some shipping cask loadings will have process uranium oxide containers with interspersed MTR fuel loadings. Therefore, KENO calculations of such cases have also been made. The number density of the homogenized fuel element (flooded with water) and occupying the available area in the BMI-1 shipping fuel basket has already been given in Table 6.4. A vertical representation of a box containing a fuel element is shown in Figure 6.15. The KENO calculations were done for the flooded cask case. Results for the cases of a partial loading of MTR elements -- partial loading of 400 grams waste containers and for the case of 24 MTR elements are given in Table 6.12. As seen from the results mixed loadings will also be subcritical.

## 6.9 Criticality Evaluation for Union Carbide Special Form Capsule

### 6.9.1 Package Fuel Loading

The special form capsules are nominally 1.25 inches in diameter and 18.0 inches long. They are made entirely of 300 Series stainless steel. Up to 100 grams of $U^{235}$ may be contained in each capsule in oxide form. The uranium oxide is sealed dry within the capsules.

### 6.9.2 Normal Conditions

The shipments are to be made dry. The total mass of U-235 in twenty-four (24) special form capsules is 2.4 kg. The minimum critical mass of fully reflected U-235 is 22.8 kg. Therefore, even for two packages in contact and reflected on all sides by water, $k_{eff} < 1$.

### 6.9.3 Accident Conditions

Under accident conditions for fissile Class III materials, one shipment of packages is to remain subcritical with optimum hydrogenous moderation and close reflection by water. In Section 6.8.3 it was shown

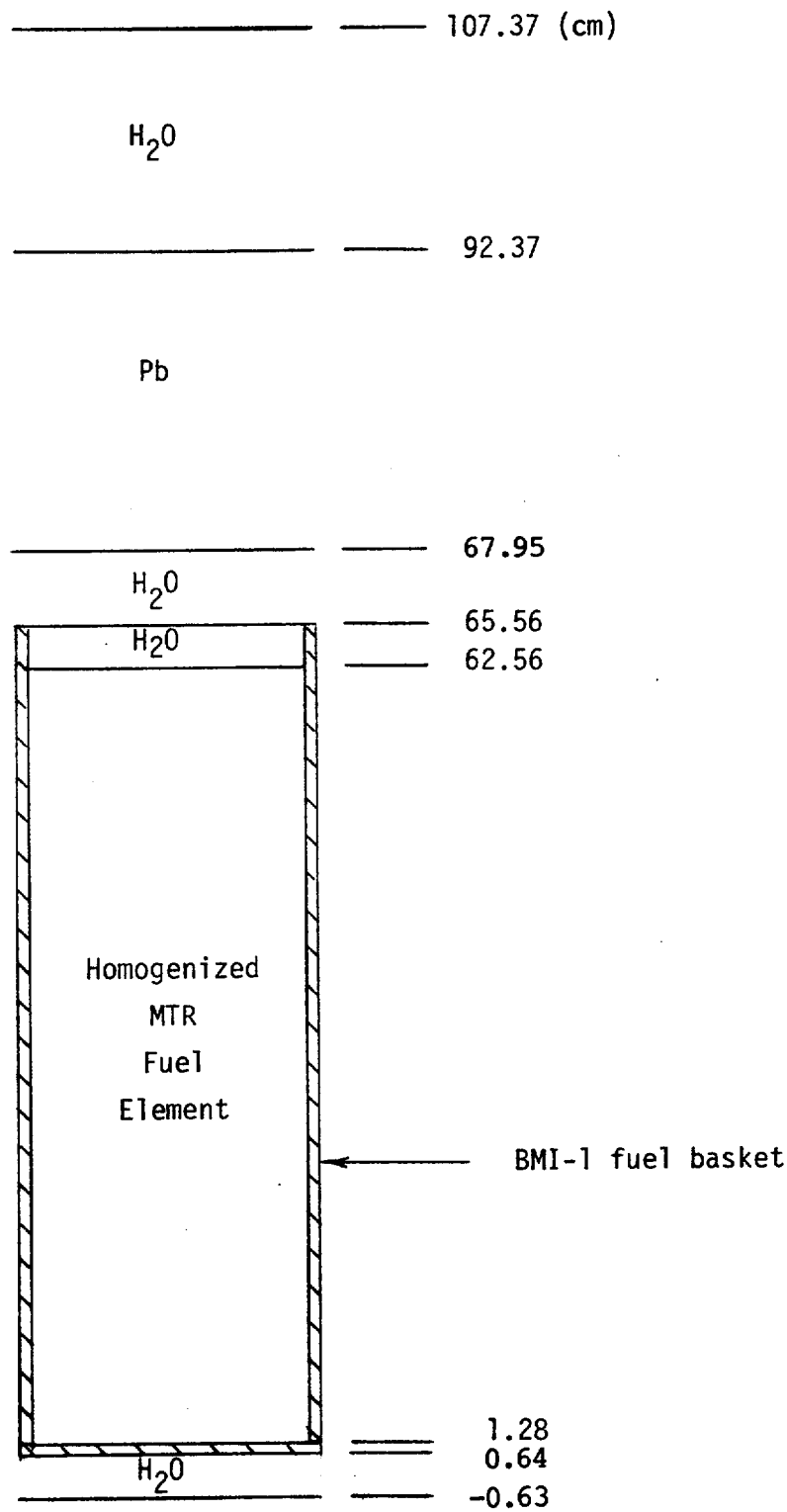


Figure 6.15 Vertical Cross-Section of Box Type Carrying MTR Element in Flooded Cask

that up to 400 grams of uranium oxide fully enriched in U-235 was subcritical for various combinations of cask flooding and pressure of water within process uranium oxide containers. Since the maximum quantity of U-235 contained in the special form capsules is significantly less than for the process oxide containers, by reference to the analytical results presented in Section 6.8.3 (specifically Table 6.11), the shipment of twenty-four (24) Union Carbide special form capsules is considered to be subcritical for all accident conditions.

Document: 3, 5, 9, 15

## 6.10 APPENDIX

### 6.10.1 References

(1) Whitesides, G. E., "Adjoint Biasing in Monte Carlo Criticality Calculations", Trans. Am. Nucl. Socl., 11, 159 (1968).

(2) Bell, G. E., et al, "Los Alamos Group-Averaged Cross Sections", LAMS-2941 (September, 1963).

(3) TID 7028

(4) Whitesides, G. E., Private Communication.

(5) Burrus, W. R., "How Channeling Between Chunks Raises Neutron Transmission Through Boral", Nucleonics, 16, 91-94 (January, 1958).

(6) BMI - Internal Memo from R. O. Wooton to E. C. Lusk (April 9, 1964).

(7) Nuclear Safety Guide, TID-7016, Rev. 1, Goodyear Atomic Corporation (1961).

(8) Private communication from Martin N. Haas, Associate Director, Nuclear Science and Technology Facility, State University of New York at Buffalo to Dr. Richard Denning, Battelle Memorial Institute, Columbus, Ohio 43201 (March 15, 1977).

(9) RSIC Computer Code Collection, ORNL-TM-3076, AMPX-1, Oak Ridge National Laboratory, Oak Ridge, Tennessee 37830.

(10) Petrie, L. M., and Cross, N. F., "KENO IV, An Improved Monte Carlo Criticality Program", ORNL-4938, Oak Ridge National Laboratory, Oak Ridge, Tennessee 37830.