Westinghouse Non-Proprietary Class 3

WCAP-15996-NP
Revision 00

December 2002

Technical Description Manual for the CENTS Code

Volume 2

Westinghouse

WCAP-15996-NP
Revision 0

TECHNICAL DESCRIPTION MANUAL FOR THE CENTS CODE

VOLUME 2

December 2002

CE Engineering Technology

This document is the property of and contains information owned by Westinghouse Electric Company LLC and/or its subcontractors and suppliers. It is transmitted to you in confidence and trust, and you agree to treat this document in strict accordance with the terms and conditions of the agreement under which it is provided to you.

©2002 Westinghouse Electric Company LLC
2000 Day Hill Road
Windsor, Connecticut 06095-0500

All Rights Reserved

ABSTRACT

CENTS is an interactive computer code for simulation of the Nuclear Steam Supply System and related systems. It calculates the behavior of a PWR for normal and abnormal conditions including accidents. It is a flexible tool for PWR analysis which gives the user complete control over the simulation through convenient input and output options.

CENTS is an adaptation of design computer codes to provide PWR simulation capabilities. It is based on detailed first-principles models for single and two-phase fluids. Use of nonequilibrium, nonhomogeneous models allows a full range of fluid conditions to be represented, including forced circulation, natural circulation, extensive coolant voiding and lower mode operation. The code provides a comprehensive set of interactions between the analyst, the reactor control systems and the reactor. This allows simulation of multiple failures and the effects of correct and incorrect operator actions. Examples of simulation runs with CENTS are steady state, power change, pump trip, loss of load, loss of feedwater, steam line break, feedwater line break, steam generator tube rupture, anticipated transients without scram, rod ejection, loss of coolant accidents, anticipated operational transients, and malfunctions of components, control systems or portions of control systems.

The CENTS code models most of the nuclear steam supply system and related systems. Core power is computed using a point kinetics model. Boiling curves for forced convection and pool boiling are used in the multi-node core heat transfer model. Primary and secondary thermal-hydraulic behavior is calculated with detailed multi-node and flowpath models. Nonhomogeneous, nonequilibrium conditions are also modeled, as well as the transport of solutes and non-condensible gases. The main control systems for reactivity, level, pressure, and steam flow are simulated. A multi-node and flowpath representation of the feedwater system is provided. Related balance of plant systems for single-phase fluid are represented.

The code features a Generic Control System design that processes system parameters and produces signals to drive the various plant subsystems. The control system is modular in design. It is constructed by the system modeler to simulate a specific plant's control systems, and can be made as simple or as true to the actual controllers as desired. It has an inventory of predefined functional modules, including arithmetic, Boolean, integro-differential and specialized functions. Once the control system structure is established by the modeler, it functions automatically, and its details do not normally concern the CENTS user. However, the user can, at any time during a transient, interactively change setpoints, disable control systems or exercise manual control. The control system designer/analyst, on the other hand, may study the detailed functioning of control modules by tracing their dynamic behavior, experimenting with their parameters and algorithms, or interfering with the lines of communication among the control modules.

The CENTS database provides a complete description of the nuclear plant systems that are modeled. Multiple plant states can be maintained on disk simultaneously as independent "snapshot" files, each of which contains the database plus a complete set of transient information. To initiate a transient from any snapshot, the user effects appropriate changes or perturbations to the plant. A new plant state is obtained by running a simulation to maneuver the plant interactively from a given plant state, or by using the code's self-initialization feature. Any intermediate state during a transient simulation can be saved as a snapshot for later study or to initiate parametric variations on plant behavior.

Use of CENTS is supported by executive software that handles most of the simulation mechanics, and allows the user to interact with CENTS as the transient progresses. This software provides a sophisticated command language that supports basic simulation maneuvers, collection of transient data, as well as complex interactions and probes by the advanced user. The executive software supports changes desired in the course of the transient and facilitates evaluation of the plant behavior details. The user may freeze, resume or backtrack a transient simulation at any time, examine plant parameters, make changes, take manual actions and initiate malfunctions. The user may, at any time, instruct the code to

automatically make changes, display parameters or take any interactive action at pre-selected times, or when pre-selected dynamic conditions are satisfied, if desired, without interrupting the simulation.

CENTS may also be driven by a graphical environment in which the user accesses an interactive menu system via mouse-driven controls. Its live system parameter plots and graphical depictions of the plant state are invaluable tools in helping the user gain an understanding of the system behavior. In addition, a combination of standard and user-defined numerical outputs allows the user to explore details of the plant subsystem behavior.

CENTS Revision Record

Topical Report

WCAP-15996-P Section No.	CENPD-282-P-A Section No.	Section Title
		TABLE OF CONTENTS
1.0	**1.0**	**Introduction**
2.0	**2.0**	**Summary of Methodology**
2.1	2.1	Primary System Geometric Representation
2.2	2.2	Conservation Equations
2.3	2.3	Two-Phase Fluid Representation
2.4	2.4	Non-Equilibrium States
2.5	2.5	Reactor Core
2.6	2.6	Other Primary System Models
2.7	2.7	Steam Generator Heat Transfer
2.8	2.8	Steam Generator Secondary System Geometric Modeling
2.9	2.9	Secondary System Conservation Equations
2.10	—	*NEW* — Other Secondary System Models
2.11	2.10	Control System Modeling
2.12	—	*NEW* — Balance of Plant Systems
2.13	2.11	References
3.0	**3.0**	**Core Model**
3.1	3.1	Core Power by Point Kinetics
3.1.1	3.1.1	Point Kinetics Model
3.1.2	3.1.2	Decay Heat Curve
3.1.3	3.1.3	Zirconium-Water Reaction
3.2	—	*NEW* — Other Core Models
—	3.2	*DELETED* — Core Power by Three-Dimensional Neutronics
3.2.1	3.2.4	Fuel Failure
—	3.2.1	*DELETED* — Three-Dimensional Neutronics
3.2.2	—	*NEW* — DNBR Fuel Design Limit
—	3.2.2	*DELETED* — Point Kinetics for the 3-D Core Model
—	3.2.3	*DELETED* — Core Thermal Hydraulics for the 3-D Core Model
3.3	3.3	Core Heat Transfer
3.3.1	3.3.1	System Representation
3.3.2	3.3.2	Discretized Heat Conduction Equation
3.3.3	3.3.3	Integration of the Heat Conduction Equation
3.3.4	3.3.4	Heat Transfer Modes
3.3.5	3.3.5	Coolant Enthalpy Profile
3.3.6	3.3.6	Fuel Rod and Fluid Properties
3 4	3.4	References

CENTS Revision Record

Topical Report

WCAP-15996-P Section No.	CENPD-282-P-A Section No.	Section Title
4.0	**4.0**	**Reactor Coolant System Thermal-Hydraulic Model**
4.1	4.1	System Representation
4.2	4.2	The Conservation Equations
4.3	4.3	Integration of the Conservation Equations
4.3.1	4.3.1	The Integration Method
4.3.2	4.3.2	The Linearized Conservation Equations
4.4	4.4	Determination of Node State Variables
4.4.1	4.4.1	Calculation of the Pressure and Mixture Enthalpy for Thermal Equilibrium Conditions (Single-Phase Liquid, Single-Phase Steam, and Saturated Equilibrium Two-Phase).
4.4.2	4.4.2	Calculation of the Pressure and Liquid Enthalpy, for Subcooled Water-Saturated Steam Non-Equilibrium Conditions
4.4.3	4.4.3	Calculation of the Pressure and Steam Enthalpy for Saturated Water-Superheated Steam Non-Equilibrium Conditions
4.4.4	4.4.4	Calculation of the Pressure, Liquid Enthalpy and Steam Enthalpy for Subcooled Water-Superheated Steam Non-Equilibrium Conditions
4.5	4.5	Calculation of the Derivatives for Integration of the Conservation Equations
4.5.1	4.5.1	Equilibrium State
4.5.2	4.5.2	Subcooled Liquid - Saturated Steam Non-Equilibrium State
4.5.3	4.5.3	Saturated Water - Superheated Steam Non-Equilibrium State
4.5.4	4.5.4	Subcooled Water-Superheated Steam Non-Equilibrium State
4.6	4.6	Steam Condensation
4.6.1	4.6.1	Condensation on Injected Liquid: Pressurizer Spray
4.6.2		Condensation on Injected Liquid: Other Than Pressurizer Spray
4.6.3	4.6.2	Condensation of Bubbles
4.6.4	4.6.3	Condensation on Liquid Surface
4.6.5	4.6.4	Condensation on Walls
—	4.6.5	*DELETED* — Boiling Condensation
4.6.6	—	*NEW* — Vaporization
4.6.7	—	*NEW* — Condensation in the Presence of Non-Condensible Gases
4.7	4.7	Critical Flow Calculation
4.8	4.8	Mixture Level Model
4.8.1	4.8.1	Node Geometry
4.8.2		*NEW* — Steam Dispersed in the Liquid Phase (Bubble Mass)
—	4.8.2	*DELETED* — Calculation of the Mass of Bubbles Dispersed in Liquid Phase
4.8.3	—	Distribution and Release of Bubbles in Lumped Nodes
—	4.8.3	*DELETED* — Calculation of the Bubble Release Rate and Bubble Distribution

CENTS Revision Record

Topical Report

WCAP-15996-P Section No.	CENPD-282-P-A Section No.	Section Title
4.8.4	—	*NEW* — Distribution and Release of Bubbles in Sectionalized Nodes
4.8.5	—	*NEW* — Height of Subcooled Layer in the Core
4.8.6	4.8.4	Calculation of the Mixture Level
4.9	4.9	Flow Path Properties
4.9.1	4.9.1	Thermodynamic Path Properties
4.9.2	4.9.2	Free-Steam Fraction at Steam Inlet/Outlet
4.10	4.10	Wall Heat
4.10.1	4.10.1	Lumped Node Wall Heat
4.10.2	4.10.2	Pressurizer Wall Heat
4.11	4.11	Reactor Coolant Pumps
4.11.1	4.11.1	RCP Thermal-Hydraulic Calculations
4.11.2	4.11.2	RCP Shaft Speed Calculations
4.12	4.12	Non-Condensibles Transport Model
4.12.1	—	*NEW* — Model Overview and Assumptions
—	4.12.1	*DELETED* — Upper Head Non-Condensibles Model
4.12.2	—	*NEW* — Gas Transport
—	4.12.2	*DELETED* —Pressurizer Air Model
4.12.3	—	*NEW* — Partial Pressures of Gases and Steam
4.13	4.13	Pressurizer Heater Temperature
4.14	4.14	Flow Calculation of RCS Subsystems
4.14.1	4.14.1	Main Spray System
4.14.2	4.14.2	Pressurizer Relief System
4.14.3	4.14.3	Vessel Upper Head Vent Subsystem
4.14.4	4.14.4	Vessel O-Ring Seals Subsystem
4.15	4.15	Calculation Of Solute Concentrations
4.16	4.16	Quench Tank (Pressure Relief Tank)
4.17	4.17	Heat Transfer Between CEA Node And Core Node
4.18	4.18	Geometric Losses for CEA Node Paths
4.19	4.19	Outputs to the Instrumentation Models
4.19.1	4.19.1	Instrumentation Pressurizer Level
4.20	—	*NEW* — The Matrix Inversion Routine Constants
—	4.20	*DELETED* — Fast and Slow Transients Model
—	4.20.1	*DELETED* — Fast Time Transients
—	4.20.2	*DELETED* — Slow Time Transients
4.21	—	*NEW* — RCS Line Break Models
	4.21	*DELETED*—Matrix Inversion Routine Constants
4.21.1	—	*NEW* —Letdown Line Break
4.21.2	—	*NEW* — Small Break LOCA
4.22	4.22	References

CENTS Revision Record

Topical Report

WCAP-15996-P Section No.	CENPD-282-P-A Section No.	Section Title
5.0	**5.0**	**Secondary System Models**
5.1	5.1	Geometric Representation
5.2	5.2	Steam Generator Secondary Model
5.2.1	5.2.1	Node and Path Conservation Equations
5.2.2	5.2.2	Internal Flow Calculations
5.2.3	5.2.4	Dry Steam Generator
—	5.2.3	*DELETED* — Solute Calculation
5.2.4	5.2.5	Inter-Region Heat Transfer
5.2.5	5.2.6	Steam Generator Heat Loss
5.2.6	5.2.7	Critical Flow
5.3	5.3	Steam Generator Tube Heat Transfer
5.3.1	—	*NEW* — Geometric Model Of Sectionalized Tubes
5.3.2	—	*NEW* — Dynamic Application of Sectionalized Geometry on Primary Side
5.3.3	—	*NEW* — Conservation of Tube Metal Energy
—	5.3.3	*DELETED* — Economizer
5.3.4	5.3.1	Primary Side Heat Transfer
5.3.5	5.3.2	Secondary Side Heat Transfer
5.4	5.4	Indicated Level
5.5	5.5	Feed Water Line Model
5.5.1	—	*NEW* — Detailed Model – General Description
5.5.2	—	*NEW* — Detailed Model – Piping Network
—	5.5.2	*DELETED* — Detailed Feed Water Line Model
5.5.3	—	*NEW* — Detailed Model – Feedwater Line Break
5.5.4	—	*NEW* — Detailed Model – Feedwater Line Flow Leaks
5.5.5	—	*NEW* — Detailed Model – Feedwater Pumps
5.5.6	—	*NEW* — Detailed Model – Feedwater Control Valves
5.5.7	—	*NEW* — Detailed Model – Feedline Check Valves And Isolation Valves
5.5.8	—	*NEW* — Detailed Model – Unisolable Feedline Mass Expansion Flow
5.5.9	—	*NEW* — Detailed Model – Feedwater Enthalpy And Feedwater Heater
5.5.10	5.5.1	Simplified Feed Water Line Model
5.6	5.6	Main Steam Line and Header Model
5.6.1	—	*NEW* — General Description
—	5.6.1	*DELETED* — Steam Line Header Flow Rates
5.6.2	—	*NEW* — Metal Temperature and Heat Loss
—	5.6.2	*DELETED* — Steam Line Header Drain Flows
5.6.3	—	*NEW* — Steamline Drain Flows
—	5.6.3	*DELETED* — Auxiliary Flow from MSLH

CENTS Revision Record

Topical Report

WCAP-15996-P Section No.	CENPD-282-P-A Section No.	Section Title
5.6.4	—	*NEW* — Steam Line Pressures And Flows
—	5.6.4	*DELETED* — Nuclide Concentrations in MSLH
5.6.5	—	*NEW* — Main Steam Line Header Flow to Turbine and Condenser
—	5.6.5	*DELETED* — MSLH Heat Loss
5.6.6	—	*NEW* — Main Steam Line Header Cross-Connect Flows
5.6.7	—	*NEW* — Main Steam Line Header Conservation Equations
5.7	—	*NEW* — Steam Generator Tube Rupture Model
5.7.1	—	*NEW* — General Description
5.7.2	—	*NEW* — Double Ended Guillotine Break Model
5.7.3	—	*NEW* — Slot Break Model
5.8	—	*NEW* — Iodine Dose Model
5.8.1	—	*NEW* — Model Overview
5.8.2	—	*NEW* — RCS Solute Concentrations
5.8.3	—	*NEW* — Steam Generator Solute Concentrations
5.8.4	—	*NEW* — Steam Line Header Solute Flows
5.8.5	—	*NEW* —Release from Containment to Atmosphere
5.8.6	—	*NEW* — Total Iodine Release From Secondary Systems
5.8.7	—	*NEW* — Global Checks of Secondary Iodine Inventory
5.8.8	—	*NEW* — Dose Calculation
5.9	5.7	References
6.0	**6.0**	**Regulating Systems and Balance-of-Plant**
6.1	6.1	Reactor Protective System
6.1.1	6.1.1	User Input and Control
6.1.2	6.1.2	Observable Variables
6.1.3	6.1.3	High Power Rate-of-Change Trip
6.2	6.2	Pressurizer Level Control System & Chemical Volume Control System
6.2.1	6.2.1	Programmed Pressurizer Level
6.2.2	6.2.2	Pressurizer Instrumentation Level Indication
6.2.3	6.2.3	Pressurizer Level Error Signal
6.2.4	6.2.4	Letdown and Charging – Automatic Control
6.2.5	6.2.5	Letdown and Charging – Manual Control
6.2.6	6.2.6	Delivery of Charging Flow
6.2.7	6.2.7	Regenerative Heat Exchanger
6.2.8	6.2.8	Observable Variables
6.3	6.3	Pressurizer Pressure Control System
6.3.1	6.3.1	Pressurizer Heaters
6.3.2	6.3.2	Pressurizer Spray
6.3.3	6.3.3	Observable Variables
6.4	6.4	Primary Coolant System Relief Valves

CENTS Revision Record

Topical Report

WCAP-15996-P Section No.	CENPD-282-P-A Section No.	Section Title
6.4.1	6.4.1	Pressurizer Power Operated Relief Valves
6.4.2	6.4.2	Pressurizer Safety Valves
6.4.3	6.4.3	Pressurizer Vent Valves
6.4.4	6.4.4	Upper Head Vent Valves
6.4.5	6.4.5	Observable Variables
6.5	6.5	Safety Injection System
6.5.1	6.5.1	Safety Injection Actuation Signal
6.5.2	6.5.2	HPSI and LPSI Flows
6.5.3	6.5.3	Safety Injection Tanks
6.5.4	—	*NEW*—Shutdown Cooling Return Flow Via SI Lines
6.5.4	6.5.4	*DELETED*—SIS Flow – Combined HPSI, LPSI and SIT Flows
6.5.5	—	*NEW*— SIS Flow – Combined HPSI, LPSI, SIT and SDC Flows
6.5.6	6.5.5	Observable Variables
6.6	6.6	Turbine Control and Steam Regulating Systems
6.6.1	—	*NEW*—Turbine Steam Demand and Admission Valve Response
6.6.2	6.6.1	Turbine Trip
—	6.6.2	*DELETED*—Turbine Admission Valves
6.6.3	6.6.3	Main Steam Isolation Valves
6.6.4	6.6.4	Atmospheric Steam Dump
6.6.5	6.6.5	Turbine Bypass
6.6.6	6.6.6	Steam Generator Safety Valves
6.6.7	6.6.7	Observable Variables
6.6.8	—	*NEW*—Turbine Runback and Setback
6.7	6.7	Feedwater Systems
6.7.1	6.7.1	Main Feedwater Regulating System
6.7.2	6.7.2	Auxiliary Feedwater System
6.7.3	6.7.3	Feedwater Enthalpy
6.7.4	6.7.4	Steam Generator Instrumentation Level Indication
6.8	6.8	Control Rod Regulating System
6.8.1	6.8.1	Control Rod Speed
6.8.2	6.8.2	Control Rod Position
6.8.3	6.8.3	Observable Variables
6.8.4	—	*NEW*—Reactor Power Cutback
7.0	**7.0**	**Input and Output for CENTS**
7.1	7.1	Core
7.1.1	7.1.1	Core Power
7.1.2	7.1.2	Core Heat Transfer
7.1.3	7.1.3	Fuel Failure
7.2	7.2	Primary System

CENTS Revision Record

Topical Report

WCAP-15996-P Section No.	CENPD-282-P-A Section No.	Section Title
7.2.1	7.2.1	Nodes
7.2.2	7.2.2	Flowpaths
7.2.3	7.2.3	Reactor Coolant Pumps
7.2.4	7.2.4	Core Bypass
7.2.5	7.2.5	Core-Exit Enthalpy Tilt
7.2.6	7.2.6	Quench Tank
7.2.7	—	*NEW*—Non-Condensibles and Solutes
7.3	7.3	Secondary System
7.3.1	—	*NEW*—Steam Generator Nodalization
7.3.2	—	*NEW*—Steam Generator Heat Transfer
7.3.3	—	*NEW*—Main Steamline and Header
7.3.4	—	*NEW*—Feedwater System
7.3.5	—	*NEW*—Solutes and Dose
7.4	7.4	Wall Heat Transfer
7.5	7.5	Malfunctions and Leaks
7.5.1	7.5.1	Primary System Malfunctions
7.5.2	7.5.2	Secondary System Malfunctions
7.6	—	*NEW*—CENTS Output
	7.6	*DELETED*— Use of the Data Dictionary
7.6.1	7.7	Standard CENTS Output
7.6.2	—	*NEW*—Use of CENTS Variable Dictionary
7.6.3	—	*NEW*—Summary Output Variables
7.6.4	—	*NEW*—Customized Edits
7.6.5	—	*NEW*—Graphical User Interface
7.7	7.8	References
—	**8.0**	***DELETED*—Verification**
—	8.1	*DELETED*—Verification Procedure
—	8.2	*DELETED—Steady State Capability*
—	8.3	*DELETED—Comparisons to Plant Data*
—	8.3.1	*DELETED*—Pump Coastdown
—	8.3.2	*DELETED*—Overcooling Transient
—	8.3.3	*DELETED*—Plant Cooldown Transient
—	8.4	*DELETED*—Comparison to Other Design Codes
—	8.4.1	*DELETED*—Small Break Loss of Coolant Accident
—	8.5	*DELETED*—Conclusions
—	8.6	*DELETED*—References
—	Appendix A	*DELETED*—Data Dictionary Variables
—	Appendix B	*DELETED*—Data Dictionary Index
Appendix A	Appendix C	Input Variables

CENTS Revision Record

Topical Report

WCAP-15996-P Section No.	CENPD-282-P-A Section No.	Section Title
Appendix B	Appendix D	Critical Flow Tables
B.1	D.1	References
Appendix C	Appendix E	CENTS Generic Control Systems
C.1	E.1	Introduction
C.2	E.2	Control System Structure
C.2.1	E.2.1	Functional Elements
C.2.2	E.2.2	Control Groups
C.2.3	E.2.3	Control Systems
C.2.4	E.2.4	Sequence of Control Group Execution
C.2.5	—	*NEW*—Entry of Control System Information
C.3	E.3	Description of Functional Elements
C.4	—	*NEW*—References
Appendix D	Appendix F	CENTS Initialization
D.1	F.1	Initialization Routines
D.1.1	—	*NEW*—INITIAL
	F.1.1	*DELETED*—SYSINI
D.1.2	F.1.2	RCSINI
D.1.3	F.1.3	CHTINI
D.1.4	F.1.4	POWINI
D.1.5	F.1.5	SGSINI
D.1.6	F.1.6	CONINI
D.2	F.2	Initialization Procedure
Appendix E	Appendix G	CESEC Emulation
E.1	—	*NEW*—Temperature Tilt in the Core
—	G.1	*DELETED*—Temperature Distribution in Core
—	G.1.1	*DELETED*—CENTS Model for Core Mixing
—	G.1.2	*DELETED*—Temperature Tilt Calculation
E.2	G.2	Moderator Density Calculation
E.3	—	*NEW*—Hermite Reactivity Credit
—	G.3	*DELETED*—Hermite Credit
—	G.4	*DELETED*—Inputs
E.4	—	*NEW*—Inputs for CESEC Reactivity Model Emulation
E.5	—	*NEW*—Steam Generator Heat Transfer Degradation
E.6	—	*NEW*—References
Appendix F	—	*NEW*—CETOPLINK
F.1	—	*NEW*—The CETOP Command
F.2	—	*NEW*—Associated CENTS Variables
F.3	—	*NEW*—Reference
Appendix G	—	*NEW*—CENTS Variable Dictionary

CENTS Revision Record

Topical Report

WCAP-15996-P Section No.	CENPD-282-P-A Section No.	Section Title
G.1	—	*NEW*—Variables Dictionary with Full Definitions
G.2	—	*NEW*—Variables Dictionary in Tree Structure
G.3	—	*NEW*—Alphabetized Index of Long Variable Names
G.4	—	*NEW*—Alphabetized Index of Short Variable Names
G.5	—	*NEW*—References

CENTS Revision Record

List of Tables

WCAP-15996-P Section No.	CENPD-282-P-A Section No.	Table Title
6.1	6.1	Reactor Protective System Trip Signals and Trip Initiating Conditions
6.2	6.2	Pressurizer Level Control System Setpoints
6.3	6.3	Output Variables for PLCS and CVCS
6.4	6.4	Pressurizer Pressure Control System Setpoints
6.5	6.5	Observable Variables for PPCS
6.6	6.6	Primary Coolant System Relief Valve Setpoints
6.7	6.7	Safety Injection System Setpoints
6.8	6.8	Safety Injection Actuation Signal (Typical 3 Loop Plant)
—	6.9	*DELETED*—Variables for HPSI and LPSI Flow Models
6.9	—	*NEW*—Variables for HPSI and LPSI and SDC Flow Models
6.10	6.10	Variables for SIT Model
6.11	6.11	Observable Variables for Safety Injection System
6.12	6.12	Turbine Trip Conditions (Typical)
6.13	6.13	Turbine Admission Valve Control Logic
6.14	6.14	Turbine Admission Valve Control Variables
6.15	6.15	Turbine Admission Valve Control System (Typical)
6.16	6.16	Main Steam Isolation Valves
6.17	6.17	Atmospheric Dump Valves
6.18	6.18	Turbine Bypass Valve Setpoints
6.19	6.19	Turbine Bypass Valve Control System
6.20	6.20	Steam Generator Safety Valve Setpoints
6.21	6.21	Observable Variables for Steamlines and Header
6.22	6.22	Main Feedwater System Variables
6.23	6.23	Main Feedwater Trip (Typical)
6.24	6.24	Auxiliary Feedwater Setpoints
6.25	6.25	Auxiliary Feedwater Control System
6.26	6.26	Control Rod Controller Options
6.27	6.27	Control Rod Regulating System Setpoints and Input
6.28	6.28	Observable Variables for Control Rod Regulating System
7.1	7.1	User Control of Reactor Power
7.2	7.2	Core Power Inputs
7.3	7.3	Core Power Outputs
7.4	7.4	Core Reactivity Inputs
7.5	7.5	Core Reactivity Outputs
7.6	7.6	Fuel Rod and Coolant Channel Variables
7.7	7.7	Core Heat Transfer State
—	7.8	*DELETED*—Primary System Node Descriptions

CENTS Revision Record

List of Tables

WCAP-15996-P Section No.	CENPD-282-P-A Section No.	Table Title
7.8	—	*NEW*—Typical Primary System Node Descriptions
—	7.8a	*DELETED*—Typical C-E PWR
7.8A	—	*NEW*—C-E PWR
—	7.8b	*DELETED*—Typical Westinghouse 3 Loop PWR
7.8B	—	*NEW*—Westinghouse 3 Loop PWR
—	7.8c	*DELETED*—Typical Westinghouse 4 Loop PWR
7.8C	—	*NEW*—Westinghouse 4 Loop PWR
7.9	7.9	Primary System Node Variables
—	7.10	*DELETED*—Primary System Momentum Path Descriptions
7.10	—	*NEW*—Typical Primary System Momentum Path Descriptions
—	7.10a	*DELETED*—Typical C-E PWR
7.10A	—	*NEW*—C-E PWR
—	7.10b	*DELETED*—Typical Westinghouse 3 Loop PWR
7.10B	—	*NEW*—Westinghouse 3 Loop PWR
—	7.10c	*DELETED*—Typical Westinghouse 4 Loop PWR
7.10C	—	*NEW*—Westinghouse 4 Loop PWR
—	7.11	*DELETED*—Primary System Non-Momentum Path Descriptions
7.11	—	*NEW*—Typical Primary System Non-Momentum Path Descriptions
—	7.11a	*DELETED*—Typical C-E PWR
7.11A	—	*NEW*—C-E PWR
—	7.11b	*DELETED*—Typical Westinghouse 3 Loop PWR
7.11B	—	*NEW*—Westinghouse 3 Loop PWR
—	7.11c	*DELETED*—Typical Westinghouse 4 Loop PWR
7.11C	—	*NEW*—Westinghouse 4 Loop PWR
7.12	7.12	Primary System Path Variables
7.13	7.13	Quench Tank Variables
7.14	—	*NEW*—Non-Condensible and Solute Inputs
7.15	—	*NEW*—Non-Condensible and Solute Outputs
—	7.14	*DELETED*—Steamline External Flowpaths: Number Scheme for Sources, Sinks and Paths
7.16	—	*NEW*—Steamline External Flowpaths: Typical Number Scheme for Sources, Sinks and Paths
—	7.14a	*DELETED*—Typical C-E PWR
7.16A	—	*NEW*—C-E PWR
—	7.14b	*DELETED*—Typical Westinghouse 3 Loop PWR
7.16B	—	*NEW*—Westinghouse 3 Loop PWR
—	7.14c	*DELETED*—Typical Westinghouse 4 Loop PWR
7.16C	—	*NEW*—Westinghouse 4 Loop PWR

CENTS Revision Record

List of Tables

WCAP-15996-P Section No.	CENPD-282-P-A Section No.	Table Title
7.17	7.15	Steam Generator Secondary Node Variables
7.18	7.16	Steam Generator Secondary Internal Flowpath Variables
7.19	7.17	Secondary System External Flow Variables
7.20	—	*NEW*—Typical Feedwater System Node Descriptions
7.21	—	*NEW*—Typical Feedwater System Path Descriptions
7.22	—	*NEW*—Feedwater System Inputs
7.23	—	*NEW*—Feedwater System Outputs
7.24	—	*NEW*—Steam Generator Solutes and Dose with Specific Variable Names
7.25	7.18	Primary System Coolant Leak and Malfunctions
7.26	7.19	Steam Generator Secondary System Leaks
7.27	—	*NEW*—Variables for NSSS Breaks
—	7.20	*DELETED*—Variables for Secondary System Breaks
7.28	7.21	O-Ring Seal Leakage (ATWS) breaks
7.29	7.22	Primary System Valve and Leak Areas
7.30	7.23	Wall Heat Variables
7.31	7.24	Standard Output Control Variables
7.32	7.25	Description of Standard Output
7.33	—	*NEW*—Summary Output Data
—	8.1	*DELETED*—Steady State with Controllers Off
—	8.2	*DELETED*—Overcooling Transient Initiating Event Sequence
—	8.3	*DELETED*—Sequence of Events for Natural Circulation Transient
—	8.4	*DELETED*—Small Break Transient History
A.1	C.1	Base Inputs
A.2	C.2	Auxiliary Inputs
B.1	D.1	HEM Tables: Mass Flux as a Function of Pressure and Enthalpy
B.2	D.2	HEM Tables: Throat Pressure as a Function of Pressure and Enthalpy
B.3	D.3	H-F Tables: Mass Flux as a Function of Pressure and Enthalpy
B.4	D.4	H-F Tables: Throat Pressure as a Function of Pressure and Enthalpy
C.1	E.1	Controller Designations
C.2	E.2	Controller Interface Variables
C.3	E.3	Functional Element Descriptions
E.1	G.1	Inputs for CESEC Emulation
G.1	—	*NEW*—Dictionary Listing

CENTS Revision Record

List of Tables

WCAP-15996-P Section No.	CENPD-282-P-A Section No.	Table Title
G.2	—	*NEW*—Unused Variables
G.3	—	*NEW*—Variables Dictionary in Tree Structure
G.4	—	*NEW*—Alphabetized Index of Long Variable Names
G.5	—	*NEW*—Alphabetized Index of Short Variable Names

CENTS Revision Record

List of Figures

WCAP-15996-P Section No.	CENPD-282-P-A Section No.	Figure Title
1.1	1.1	CENTS Model of Two-Loop Pressurizer Water Reactor
—	2.1	Primary System Geometric Model
2.1	—	*NEW*—Typical Primary System Geometric Model (3 Loop W PWR)
—	2.2	*DELETED*—Steam Generator Secondary System Geometric Model
2.2	—	*NEW*—Typical Steam Generator Secondary System Geometric Model
—	3.1	*DELETED*—Three-Dimensional Radial Neutronic Nodes
—	3.2	*DELETED*—Three-Dimensional Radial Thermal Neutronic Nodes
3.1	3.3	Fuel Road and Coolant Heat Transfer Nodalization
3.2	3.4	Core and Core Inlet Representation
—	4.1	*DELETED*—Primary System Geometric Model (Loop C-E Plant)
4.1	—	*NEW*—Primary System Geometric Model (Typical Loop C-E Plant)
—	4.2	*DELETED*—Primary System Geometric Model (Typical 3 Loop W Plant)
4.2	—	*NEW*—Typical Primary System Geometric Model (Typical 3 Loop W Plant)
4.3	4.3	Phase Separation in Lumped Nodes
4.4	4.4	Phase Separation in Sectionalized Nodes
4.5	4.5	Phase Separation in Segmented Nodes
4.6	4.6	Steam Fraction – Path Fully Covered
4.7	4.7	Steam Fraction – Path Partially Covered
—	4.8	*DELETED*—Main Spray Flow Network
4.8	—	*NEW*—Main Pressurizer Spray: Typical Flow Network
—	4.9	*DELETED*—Pressurizer Relief System Network
4.9	—	*NEW*—Pressurizer Relief System: Typical Network
—	4.10	*DELETED*—Reactor Vessel Upper Head Vent Subsystem
4.10	—	*NEW*—Reactor Vessel Upper Head Vent Subsystem: Typical Layout
4.11	4.11	Block Type Matrix
4.12	—	*NEW*—Charging and Letdown Lines: Typical Network
—	5.1	*DELETED*—Main Feedwater Flow Network
6.1	6.1	Pressurizer Level Setpoint Program
6.2	6.2	Pressurizer Level Control System
6.3	6.3	Pressurizer Pressure Control Program
6.4	6.4	Pressurizer Pressure Control System

CENTS Revision Record

List of Figures

WCAP-15996-P Section No.	CENPD-282-P-A Section No.	Figure Title
6.5	6.5	Atmospheric Dump Valve Control System
6.6	6.6	Turbine Bypass Control System:
6.6A	6.6a	"Temperature Average" Mode
6.6B	6.6b	"Steam Pressure" Mode
6.7	6.7	Steam Generator Safety Valve Characteristics
6.8	6.8	Secondary System Flows Outside the Steam Generators
6.9	6.9	Steam Generator Level Setpoint Program
6.10	6.10	Main Feedwater Control System
6.11	6.11	Main Feedwater Rampdown Control System
6.12	6.12	Control Rod Regulating System:
6.12A	6.12a	T_{avg} and T_{ref}
6.12B	6.12b	Error Signal
6.12C	6.12c	Rod Speed
7.1	7.1	Fuel Rod and Coolant Channel Variables
—	7.2	*DELETED*—Primary System Node and Momentum Flowpath Numbers
7.2	—	*NEW*—Typical Primary System Node and Momentum Flowpath Numbers
—	7.2a	*DELETED*—Typical C-E PWR
7.2A	—	*NEW*—C-E PWR
—	7.2b	Typical 3 Loop Westinghouse PWR
7.2B1	—	*NEW*—C-E PWR with Expanded Nodalization
7.2B2	—	*NEW*—Pressure Vessel Annulus, Section View, Typical Node and Momentum Flow Paths, CE PWR with Expanded Nodalization
—	7.2c	*DELETED*—Typical 4 Loop Westinghouse PWR
7.2C	—	*NEW*—3 Loop Westinghouse PWR
7.2D1	—	*NEW*—3 Loop Westinghouse PWR with Expanded Nodalization
7.2D2	—	*NEW*—Pressure Vessel Annulus, Section View, Typical Node and Momentum Flow Paths, 3 Loop Westinghouse PWR with Expanded Nodalization
7.2E	—	*NEW*—4 Loop Westinghouse PWR
7.2F1	—	*NEW*—4 Loop Westinghouse PWR with Expanded Nodalization
7.2F2	—	*NEW*—Pressure Vessel Annulus, Section View, Typical Node and Momentum Flow Paths, 4 Loop Westinghouse PWR with Expanded Nodalization
	7.3	*DELETED*—Primary System Non-Momentum Flowpaths
7.3	—	*NEW*—Typical Primary System Non-Momentum Flowpaths
—	7.3a	*DELETED*—Typical C-E PWR
7.3A	—	*NEW*—C-W PWR with Expanded Nodalization

CENTS Revision Record

List of Figures

WCAP-15996-P Section No.	CENPD-282-P-A Section No.	Figure Title
—	7.3b	*DELETED*—Typical 3 Loop Westinghouse PWR
7.3B	—	*NEW*—3 Loop Westinghouse PWR with Expanded Nodalization
—	7.3c	*DELETED*—Typical 4 Loop Westinghouse PWR
7.3C	—	*NEW*—4 Loop Westinghouse PWR with Expanded Nodalization
7.4	7.4	Quench Tank Variables
—	7.5	*DELETED*—Secondary System Nodes and External Flowpaths
7.5	—	*NEW*—Typical Secondary System Nodes and External Flowpaths
—	7.5a	*DELETED*—Typical C-E PWR
7.5A	—	*NEW*—C-E PWR
—	7.5b	*DELETED*—Typical 3 Loop Westinghouse PWR
7.5B	—	*NEW*—Westinghouse 3 Loop PWR
—	7.5c	*DELETED*—Typical 4 Loop Westinghouse PWR
7.5C	—	*NEW*—Westinghouse 4 Loop PWR
7.6	7.6	Secondary System Nodes and Internal Flowpath Variables
7.7	—	*NEW*—Steam Generator Heat Transfer: Typical Nodalization
7.8	—	*NEW*—Typical Feedwater System
7.9	—	*NEW*—Typical Emergency Feedwater System
7.10	—	*NEW*—Steamline Break Locations
7.11	7.7	CENTS Output
—	8.1	*DELETED*—Four Pump Coastdown Volumetric Flow Fraction
—	8.2	*DELETED*—Overcooling Transient Steam generator Secondary Pressure
—	8.3	*DELETED*—Overcooling Transient Pressurizer Pressure
—	8.4	*DELETED*—Overcooling Transient Steam Generator Secondary Level
—	8.5	*DELETED*—Overcooling Transient Pressurizer Level
—	8.6	*DELETED*—Overcooling Transient Primary System Temperatures
—	8.7	*DELETED*—Upper Head Voiding Transient Pressure
—	8.8	*DELETED*—Upper Head Voiding Transient Pressurizer Pressure
—	8.9	*DELETED*—Upper Head Voiding Transient Loop Temperatures
—	8.10	*DELETED*—Upper Head Voiding Transient Upper Head Level
—	8.11	*DELETED*—Primary Pressure for Small Break LOCA
—	8.12	*DELETED*—Inner Vessel Level for Small Break LOCA
—	8.13	*DELETED*—Core Exit Steam Temperature for Small Break LOCA
C.1	—	*NEW*—Schematic of Control Groups

This page left blank intentionally

TABLE OF CONTENTS

Chapter	Title	Page
1.0	INTRODUCTION	1-1
2.0	SUMMARY OF METHODOLOGY	2-1
2.1	Primary System Geometric Representation	2-1
2.2	Conservation Equations	2-2
2.3	Two-Phase Fluid Representation	2-3
2.4	Thermal Nonequilibrium States	2-3
2.5	Reactor Core	2-4
2.6	Other Primary System Models	2-4
2.7	Steam Generator Heat Transfer	2-5
2.8	Steam Generator Secondary System Geometric Modeling	2-5
2.9	Secondary System Conservation Equations	2-6
2.10	Other Secondary System Models	2-6
2.11	Control System Modeling	2-7
2.12	Balance of Plant Systems	2-7
2.13	References	2-8
3.0	CORE MODEL	3-1
3.1	Core Power By Point Kinetics	3-1
3.1.1	Point Kinetics Model	3-1
3.1.2	Decay Heat Curve	3-7
3.1.3	Zirconium-Water Reaction	3-8
3.2	Other Core Models	3-8
3.2.1	Fuel Failure	3-8
3.2.2	DNBR Fuel Design Limit	3-9
3.3	Core Heat Transfer	3-9
3.3.1	System Representation	3-10
3.3.2	Discretized Heat Conduction Equation	3-11
3.3.3	Integration of the Heat Conduction Equation	3-11
3.3.4	Heat Transfer Modes	3-12
3.3.5	Coolant Enthalpy Profile	3-18
3.3.6	Fuel Rod and Fluid Properties	3-20
3.4	References	3-21
4.0	REACTOR COOLANT SYSTEM THERMAL-HYDRAULIC MODEL	4-1
4.1	System Representation	4-1
4.2	The Conservation Equations	4-2
4.3	Integration of the Conservation Equations	4-6
4.3.1	The Integration Method	4-6
4.3.2	The Linearized Conservation Equations	4-7
4.4	Determination of Node State Variables	4-9

TABLE OF CONTENTS

Chapter	Title	Page
	4.4.1 Calculation of the Pressure and Mixture Enthalpy For Thermal Equilibrium Conditions (Single-Phase Liquid, Single-Phase Steam, and Saturated Equilibrium Two-Phase).	4-10
	4.4.2 Calculation of the Pressure and Liquid Enthalpy, For Subcooled Water-Saturated Steam Non-Equilibrium Conditions	4-11
	4.4.3 Calculation of the Pressure and Steam Enthalpy For Saturated Water-Superheated Steam Non-Equilibrium Conditions	4-12
	4.4.4 Calculation of the Pressure, Liquid Enthalpy and Steam Enthalpy for Subcooled Water-Superheated Steam Non-Equilibrium Conditions	4-13
4.5	Calculation of the Derivatives For Integration of the Conservation Equations	4-14
	4.5.1 Equilibrium State	4-15
	4.5.2 Subcooled Liquid - Saturated Steam Non-equilibrium State	4-16
	4.5.3 Saturated Water - Superheated Steam Non-equilibrium State	4-17
	4.5.4 Subcooled Water-Superheated Steam Non-equilibrium State	4-18
4.6	Steam Condensation	4-19
	4.6.1 Condensation on Injected Liquid: Pressurizer Spray	4-19
	4.6.2 Condensation on Injected Liquid: Other Than Pressurizer Spray	4-20
	4.6.3 Condensation of Bubbles	4-22
	4.6.4 Condensation on Liquid Surface	4-23
	4.6.5 Condensation on Walls	4-24
	4.6.6 Vaporization	4-24
	4.6.7 Condensation in the Presence of Non-Condensible Gases	4-26
4.7	Critical Flow Calculation	4-27
4.8	Mixture Level Model	4-28
	4.8.1 Node Geometry	4-28
	4.8.2 Steam Dispersed in the Liquid Phase (Bubble Mass)	4-29
	4.8.3 Distribution and Release of Bubbles in Lumped Nodes	4-30
	4.8.4 Distribution and Release of Bubbles in Sectionalized Nodes	4-32
	4.8.5 Height of Subcooled Layer in the Core	4-35
	4.8.6 Calculation of the Mixture Level	4-36
4.9	Flow Path Properties	4-37
	4.9.1 Thermodynamic Path Properties	4-37
	4.9.2 Free-Steam Fraction At Steam Inlet/Outlet	4-40
4.10	Wall Heat	4-41
	4.10.1 Lumped Node Wall Heat	4-41
	4.10.2 Pressurizer Wall Heat	4-43
4.11	Reactor Coolant Pumps	4-46
	4.11.1 RCP Thermal-Hydraulic Calculations	4-46
	4.11.2 RCP Shaft Speed Calculations	4-48
4.12	Non-Condensibles Transport Model	4-50
	4.12.1 Model Overview and Assumptions	4-50
	4.12.2 Gas Transport	4-52
	4.12.3 Partial Pressures of Gases and Steam	4-56

TABLE OF CONTENTS

Chapter	Title	Page
4.13	Pressurizer Heater Temperature	4-57
4.14	Flow Calculation of RCS Subsystems	4-58
4.14.1	Main Spray System	4-58
4.14.2	Pressurizer Relief System	4-59
4.14.3	Vessel Upper Head Vent Subsystem	4-59
4.14.4	Vessel O-Ring Seals Subsystem	4-59
4.15	Calculation of Solute Concentrations	4-60
4.16	Quench Tank (Pressure Relief Tank)	4-64
4.17	Heat Transfer Between CEA Node and Core Node	4-66
4.18	Geometric Losses For CEA Node Paths	4-66
4.19	Outputs to the Instrumentation Models	4-67
4.19.1	Instrumentation Pressurizer Level	4-67
4.20	The Matrix Inversion Routine Constants	4-68
4.21	RCS Line Break Models	4-69
4.21.1	Letdown Line Break	4-70
4.21.2	Small Break LOCA	4-74
4.22	References	4-75
5.0	**SECONDARY SYSTEM MODELS**	**5-1**
5.1	Geometric Representation	5-1
5.2	Steam Generator Secondary Model	5-1
5.2.1	Node and Path Conservation Equations	5-2
5.2.2	Internal Flow Calculations	5-3
5.2.3	Dry Steam Generator	5-6
5.2.4	Inter-Region Heat Transfer	5-7
5.2.5	Steam Generator Heat Loss	5-8
5.2.6	Critical Flow	5-10
5.3	Steam Generator Tube Heat Transfer	5-10
5.3.1	Geometric Model of Sectionalized Tubes	5-11
5.3.2	Dynamic Application of Sectionalized Geometry on Primary Side	5-13
5.3.3	Conservation of Tube Metal Energy	5-16
5.3.4	Primary Side Heat Transfer	5-18
5.3.5	Secondary Side Heat Transfer	5-18
5.4	Indicated Level	5-19
5.5	Feed Water Line Model	5-20
5.5.1	Detailed Model – General Description	5-20
5.5.2	Detailed Model – Piping Network	5-22
5.5.3	Detailed Model – Feedwater Line Break	5-25
5.5.4	Detailed Model – Feedwater Line Flow Leaks	5-27
5.5.5	Detailed Model – Feedwater Pumps	5-27
5.5.6	Detailed Model – Feedwater Control Valves	5-29
5.5.7	Detailed Model – Feedline Check Valves and Isolation Valves	5-31
5.5.8	Detailed Model – Unisolable Feedline Mass Expansion Flow	5-33
5.5.9	Detailed Model – Feedwater Enthalpy and Feedwater Heater	5-34

TABLE OF CONTENTS

Chapter	Title	Page
	5.5.10 Simplified Feed Water Line Model	5-36
5.6	Main Steam Line and Header Model	5-37
	5.6.1 General Description	5-37
	5.6.2 Metal Temperature and Heat Loss	5-38
	5.6.3 Steamline Drain Flows	5-39
	5.6.4 Steamline Pressures and Flows	5-41
	5.6.5 Main Steam Line Header Flow to Turbine and Condenser	5-46
	5.6.6 Main Steam Line Header Cross-Connect Flows	5-47
	5.6.7 Main Steam Line Header Conservation Equations	5-47
5.7	Steam Generator Tube Rupture Model	5-52
	5.7.1 General Description	5-52
	5.7.2 Double Ended Guillotine Break Model	5-52
	5.7.3 Slot Break Model	5-55
5.8	Iodine Dose Model	5-56
	5.8.1 Model Overview	5-56
	5.8.2 RCS Solute Concentrations	5-56
	5.8.3 Steam Generator Solute Concentrations	5-60
	5.8.4 Steam Line Header Solute Flows	5-66
	5.8.5 Release from Containment to Atmosphere	5-67
	5.8.6 Total Iodine Release from Secondary Systems	5-67
	5.8.7 Global Checks of Secondary Iodine Inventory	5-69
	5.8.8 Dose Calculation	5-69
5.9	References	5-71
6.0	**REGULATING SYSTEMS AND BALANCE-OF-PLANT**	**6-1**
6.1	Reactor Protective System	6-2
	6.1.1 User Input and Control	6-3
	6.1.2 Observable Variables	6-4
	6.1.3 High Power Rate-of-Change Trip	6-5
6.2	Pressurizer Level Control System and Chemical & Volume Control System	6-11
	6.2.1 Programmed Pressurizer Level	6-11
	6.2.2 Pressurizer Instrumentation Level Indication	6-11
	6.2.3 Pressurizer Level Error Signal	6-12
	6.2.4 Letdown and Charging - Automatic Control	6-12
	6.2.5 Letdown and Charging - Manual Control	6-12
	6.2.6 Delivery of Charging Flow	6-14
	6.2.7 Regenerative Heat Exchanger	6-15
	6.2.8 Observable Variables	6-15
6.3	Pressurizer Pressure Control System	6-19
	6.3.1 Pressurizer Heaters	6-19
	6.3.2 Pressurizer Spray	6-20
	6.3.3 Observable Variables	6-20
6.4	Primary Coolant System Relief Valves	6-23
	6.4.1 Pressurizer Power Operated Relief Valves	6-23

TABLE OF CONTENTS

Chapter	Title	Page
	6.4.2 Pressurizer Safety Valves	6-24
	6.4.3 Pressurizer Vent Valves	6-24
	6.4.4 Upper Head Vent Valves	6-25
	6.4.5 Observable Variables	6-25
6.5	Safety Injection System	6-28
	6.5.1 Safety Injection Actuation Signal	6-28
	6.5.2 HPSI and LPSI Flows	6-28
	6.5.3 Safety Injection Tanks	6-29
	6.5.4 Shutdown Cooling Return Flow Via SI Lines	6-31
	6.5.5 SIS Flow - Combined HPSI, LPSI, SIT and SDC Flows	6-31
	6.5.6 Observable Variables	6-31
6.6	Turbine Control and Steam Regulating Systems	6-38
	6.6.1 Turbine Steam Demand and Admission Valve Response	6-38
	6.6.2 Turbine Trip	6-40
	6.6.3 Main Steam Isolation Valves	6-45
	6.6.4 Atmospheric Steam Dump	6-47
	6.6.5 Turbine Bypass	6-49
	6.6.6 Steam Generator Safety Valves	6-52
	6.6.7 Observable Variables	6-52
	6.6.8 Turbine Runback and Setback	6-52
6.7	Feedwater Systems	6-56
	6.7.1 Main Feedwater Regulating System	6-56
	6.7.2 Auxiliary Feedwater System	6-58
	6.7.3 Feedwater Enthalpy	6-59
	6.7.4 Steam Generator Instrumentation Level Indication	6-61
6.8	Control Rod Regulating System	6-68
	6.8.1 Control Rod Speed	6-68
	6.8.2 Control Rod Position	6-68
	6.8.3 Observable Variables	6-70
	6.8.4 Reactor Power Cutback	6-70
7.0	**INPUT AND OUTPUT FOR CENTS**	**7-1**
7.1	Core	7-1
	7.1.1 Core Power	7-1
	7.1.2 Core Heat Transfer	7-5
	7.1.3 Fuel Failure	7-6
7.2	Primary System	7-18
	7.2.1 Nodes	7-18
	7.2.2 Flowpaths	7-19
	7.2.3 Reactor Coolant Pumps	7-20
	7.2.4 Core Bypass	7-20
	7.2.5 Core-Exit Enthalpy Tilt	7-20
	7.2.6 Quench Tank	7-22
	7.2.7 Non-Condensibles and Solutes	7-23

TABLE OF CONTENTS

Chapter	Title	Page
7.3	Secondary System	7-51
7.3.1	Steam Generator Nodalization	7-51
7.3.2	Steam Generator Heat Transfer	7-51
7.3.3	Main Steamline and Header	7-53
7.3.4	Feedwater System	7-55
7.3.5	Solutes and Dose	7-56
7.4	Wall Heat Transfer	7-81
7.5	Malfunctions and Leaks	7-81
7.5.1	Primary System Malfunctions	7-82
7.5.2	Secondary System Malfunctions	7-84
7.6	CENTS Output	7-96
7.6.1	Standard CENTS Output	7-96
7.6.2	Use of CENTS Variable Dictionary	7-97
7.6.3	Summary Output Variables	7-98
7.6.4	Customized Edits	7-99
7.6.5	Graphical User Interface	7-99
7.7	References	7-108
Appendix A	Input Variables	A-1
Appendix B	Critical Flow Tables	B-1
B.1	References	B-1
Appendix C	CENTS Generic Control Systems	C-1
C.1	Introduction	C-1
C.2	Control System Structure	C-2
C.2.1	Functional Elements	C-2
C.2.2	Control Groups	C-2
C.2.3	Control Systems	C-3
C.2.4	Sequence of Control Execution	C-5
C.2.5	Entry of Control System Information	C-5
C.3	Description of Functional Elements	C-6
C.4	References	C-6
Appendix D	CENTS Initialization	D-1
D.1	Initialization Routines	D-1
D.1.1	INITIAL	D-1
D.1.2	RCSINI	D-4
D.1.3	CHTINI	D-6
D.1.4	POWINI	D-6
D.1.5	SGSINI	D-7
D.1.6	CONINI	D-9
D.2	Initialization Procedure	D-9
Appendix E	CESEC Emulation	E-1
E.1	Temperature Tilt in the Core	E-1
E.2	Moderator Density Calculation	E-3

TABLE OF CONTENTS

Chapter	Title	Page
E.3	Hermite Reactivity Credit	E-4
E.4	Inputs for CESEC Reactivity Model Emulation	E-5
E.5	Steam Generator Heat Transfer Degradation	E-5
E.6	References	E-6
Appendix F	CETOPLINK	F-1
F.1	The CETOP Command	F-2
F.2	Associated CENTS Variables	F-4
F.3	Reference	F-7
Appendix G	CENTS Variable Dictionary	G-1
G.1	Variables Dictionary with Full Definitions	G-1
G.2	Variables Dictionary in Tree Structure	G-4
G.3	Alphabetized Index of Long Variable Names	G-5
G.4	Alphabetized Index of Short Variable Names	G-6
G.5	References	G-6

LIST OF TABLES

Table	Title	Page
6.1	Reactor Protective System Trip Signals and Trip Initiating Conditions	6-6
6.2	Pressurizer Level Control System Setpoints	6-16
6.3	Output Variables for PLCS and CVCS	6-18
6.4	Pressurizer Pressure Control System Setpoints	6-21
6.5	Observable Variables for PPCS	6-22
6.6	Primary Coolant System Relief Valve Setpoints	6-27
6.7	Safety Injection System Setpoints	6-32
6.8	Safety Injection Actuation Signal (Typical 3 Loop Plant)	6-33
6.9	Variables for HPSI and LPSI Flow and SCD Models	6-35
6.10	Variables for SIT Model	6-36
6.11	Observable Variables for Safety Injection System	6-37
6.12	Turbine Trip Conditions (Typical)	6-41
6.13	Turbine Admission Valve Control Logic	6-42
6.14	Turbine Admission Valve Control Variables	6-43
6.15	Turbine Admission Valve Control System (Typical)	6-44
6.16	Main Steam Isolation Valves	6-46
6.17	Atmospheric Dump Valves	6-48
6.18	Turbine Bypass Valve Setpoints	6-50
6.19	Turbine Bypass Valve Control System (Typical 3 Loop Plant)	6-51
6.20	Steam Generator Safety Valve Setpoints	6-54
6.21	Observable Variables for Steamlines and Header	6-55
6.22	Main Feedwater System Variables	6-62
6.23	Main Feedwater Trip (Typical)	6-64
6.24	Auxiliary Feedwater Setpoints	6-65
6.25	Auxiliary Feedwater Control System (Typical 3 Loop Plant)	6-66

LIST OF TABLES

Table	Title	Page
6.26	Control Rod Controller Options	6-72
6.27	Control Rod Regulating System Setpoints and Input	6-73
6.28	Observable Variables for Control Rod Regulating System	6-74
7.1	User Control of Reactor Power	7-8
7.2	Core Power Inputs	7-9
7.3	Core Power Outputs	7-10
7.4	Core Reactivity Inputs	7-12
7.5	Core Reactivity Outputs	7-15
7.6	Fuel Rod and Coolant Channel Variables	7-16
7.7	Core Heat Transfer State	7-17
7.8	Typical Primary System Node Descriptions	
	A. C-E PWR	7-25
	B. Westinghouse 3 Loop PWR	7-27
	C. Westinghouse 4 Loop PWR	7-29
7.9	Primary System Node Variables	7-31
7.10	Typical Primary System Momentum Path Descriptions	
	A. C-E PWR	7-32
	B. Westinghouse 3 Loop PWR	7-34
	C. Westinghouse 4 Loop PWR	7-37
7.11	Typical Primary System Non-Momentum Path Descriptions	
	A. C-E PWR	7-40
	B. Westinghouse 3 Loop PWR	7-42
	C. Westinghouse 4 Loop PWR	7-44
7.12	Primary System Path Variables	7-46
7.13	Quench Tank Variables	7-48
7.14	Non-Condensible and Solute Inputs	7-49

LIST OF TABLES

Table	Title	Page
7.15	Non-Condensible and Solute Outputs	7-50
7.16	Steamline External Flowpaths: Typical Numbering Scheme for Sources, Sinks and Paths	
	A. C-E PWR	7-59
	B. Westinghouse 3 Loop PWR	7-61
	C. Westinghouse 4 Loop PWR	7-63
7.17	Steam Generator Secondary Node Variables	7-65
7.18	Steam Generator Secondary Internal Flowpath Variables	7-69
7.19	Secondary System External Flow Variables	7-70
7.20	Typical Feedwater System Node Descriptions	7-73
7.21	Typical Feedwater System Path Descriptions	7-74
7.22	Feedwater System Inputs	7-76
7.23	Feedwater System Outputs	7-77
7.24	Steam Generator Solutes and Dose with Specific Variable Names	7-79
7.25	Primary System Coolant Leaks and Malfunctions	7-86
7.26	Steam Generator Secondary System Leaks	7-88
7.27	Variables for NSSS Breaks	7-89
7.28	O-Ring Seal Leakage (ATWS) Variables	7-92
7.29	Primary System Valve and Leak Areas	7-93
7.30	Wall Heat Variables	7-94
7.31	Standard Output Control Variables	7-100
7.32	Description of Standard Output	7-101
7.33	Summary Output Data	7-106

LIST OF TABLES

Table	Title	Page
A.1	Base Inputs	A-2
A.2	Auxiliary Inputs	A-12
B.1	HEM Tables: Mass Flux as a Function of Pressure and Enthalpy	B-2
B.2	HEM Tables: Throat Pressure as a Function of Pressure and Enthalpy	B-4
B.3	H-F Tables: Mass Flux as a Function of Pressure and Enthalpy	B-5
B.4	H-F Tables: Throat Pressure as a Function of Pressure and Enthalpy	B-7
C.1	Controller Designations	C-7
C.2	Controller Interface Variables	C-8
C.3	Functional Element Descriptions	C-9
E.1	Inputs for CESEC Emulation	E-7
G.1	Dictionary Listing	G-7
G.2	Variables Dictionary in Tree Structure	G-192
G-3	Alphabetized Index of Long Variable Names	G-227
G-4	Alphabetized Index of Short Variable Names	G-254

LIST OF FIGURES

Figure	Title	Page
1.1	CENTS Model of Two-Loop Pressurized Water Reactor	1-3
2.1	Typical Primary System Geometric Model (3 Loop W PWR)	2-10
2.2	Typical Steam Generator Secondary System Geometric Model	2-11
3.1	Fuel Rod and Coolant Heat Transfer Nodalization	3-23
3.2	Core and Core Inlet Representation	3-24
4.1	Primary System Geometric Model (Typical 2 Loop C-E Plant)	4-77
4.2	Typical Primary System Geometric Model (Typical 3-Loop W Plant)	4-78
4.3	Phase Separation in Lumped Nodes	4-79
4.4	Phase Separation in Sectionalized Nodes	4-80
4.5	Phase Separation in Segmented Nodes	4-81
4.6	Steam Fraction - Path Fully Covered	4-82
4.7	Steam Fraction - Path Partially Covered	4-83
4.8	Main Pressurizer Spray: Typical Flow Network	4-84
4.9	Pressurizer Relief System: Typical Network	4-85
4.10	Reactor Vessel Upper Head Vent Subsystem	4-86
4.11	Block Type Matrix	4-87
4.12	Charging and Letdown Lines: Typical Network	4-88
6.1	Pressurizer Level Setpoint Program	6-75
6.2	Pressurizer Level Control System	6-76
6.3	Pressurizer Pressure Control Program	6-77
6.4	Pressurizer Pressure Control System	6-78
6.5	Atmospheric Dump Valve Control System	6-79

LIST OF FIGURES

Figure	Title	Page
6.6	Turbine Bypass Control System:	
	A. "Temperature Average" Mode	6-80
	B. "Steam Pressure" Mode	6-81
6.7	Steam Generator Safety Valve Characteristics	6-82
6.8	Secondary System Flows Outside the Steam Generators	6-83
6.9	Steam Generator Level Setpoint Program	6-84
6.10	Main Feedwater Control System	6-85
6.11	Main Feedwater Rampdown Control System (Typical)	6-86
6.12	Control Rod Regulating System:	
	A. T_{avg} and T_{ref} (Typical, 3 Loop)	6-87
	B. Error Signal (Typical)	6-88
	C. Rod Speed (Typical)	6-89
7.1	Fuel Rod and Coolant Channel Variables	7-109
7.2	Typical Primary System Node and Momentum Flowpath Numbers	
	A. C-E PWR	7-110
	B1 C-E PWR with Expanded Nodalization	7-111
	B2 Pressure Vessel Annulus, Section View, Typical Node and Momentum Flow Paths, C-E PWR with Expanded Nodalization	7-112
	C. 3 Loop Westinghouse PWR	7-113
	D1 3 Loop Westinghouse PWR with Expanded Nodalization	7-114
	D2 Pressure Vessel Annulus, Section View, Typical Node and Momentum Flow Paths, 3 Loop Westinghouse PWR with Expanded Nodalization	7-115
	E. 4 Loop Westinghouse PWR	7-116
	F1 4 Loop Westinghouse PWR with Expanded Nodalization	7-117
	F2 Pressure Vessel Annulus, Section View, Typical Node and Momentum Flow Paths, 4 Loop Westinghouse PWR with Expanded Nodalization	7-118
7.3	Typical Primary System Non-Momentum Flowpaths	

LIST OF FIGURES

Figure	Title	Page
A.	C-E PWR with Expanded Nodalization	7-119
B.	3 Loop Westinghouse PWR with Expanded Nodalization	7-120
C.	4 Loop Westinghouse PWR with Expanded Nodalization	7-121
7.4	Quench Tank Variables	7-122
7.5	Typical Secondary System Nodes and External Flowpaths	
A.	C-E PWR	7-123
B.	Westinghouse 3 Loop PWR	7-124
C.	Westinghouse 4 Loop PWR	7-125
7.6	Secondary System Nodes and Internal Flowpath Variables	7-126
7.7	Steam Generator Heat Transfer: Typical Nodalization	7-127
7.8	Typical Feedwater System	7-128
7.9	Typical Emergency Feedwater System	7-129
7.10	Steamline Break Locations	7-130
7.11	CENTS Output	7-131
C.1	Schematic Structure of Control Groups	C-13

6.0 REGULATING SYSTEMS AND BALANCE-OF-PLANT

This chapter describes the balance of plant and control system models and user control of the related systems. It describes the database input variables that are used in these models and notes, which are accessible, by the user to control the system (e.g., setpoints, manual control signals and certain hardware performance characteristics). The user may change the values of input variables supplied in the database at any time during the transient. This chapter also identifies many of the related output variables. The values of output variables, which change dynamically during the transient, may be observed interactively by the user, or may be included in a user-defined output format using the executive software.

CENTS provides a very flexible method to handle control systems for the core, primary system, secondary system, and selected balance of plant systems. This is done by a shell program and a set of generic control system modules. The shell provides interfaces for the process models, control models, and the user. The variable dictionary provides variables to define the controllers including setpoints, performance of ancillary components and interfaces to the process models. The systems supported by the shell are:

1. Reactor protective system,
2. Pressurizer level control and CVCS,
3. Pressurizer pressure control,
4. Primary system relief valves,
5. Safety Injection Systems (accumulators and ECCS pumps),
6. Turbine control, admission, isolation, dump, relief and bypass valves,
7. Feedwater - main and auxiliary, and
8. Control rod regulating system.

The actual controllers are defined by means of the generic control system modules. The system modeler selects the level of detail to be provided for each controller, and then assembles each controller using the generic modules and control system (setpoint

and component performance) variables as building blocks. This provides a very flexible capability to handle plant specific characteristics of control systems.

The resulting control system modeling scheme enables the system modeler to define simple or more sophisticated controllers as needed. However, the code user does not need to approach the control systems at this level. The interface provided by the control system shell, the setpoint variables and the ancillary component performance variables are used to control operation of the reactor. This interface is described fully, in the text below. Details of the controllers and interfaces that are supported by CENTS are summarized in the tables and figures. Examples of controllers and interfaces representative of typical modeling practices for C-E and Westinghouse designed plants are provided. The controls used and the modeling detail may differ depending on the analysis application, e.g., non-LOCA licensing or full plant simulation. Consequently, a subset of the control system models and variables are used as needed in the basedeck for each plant or application. The CENTS control system modules and their uses are discussed in Appendix C.

Where ambiguity exists as to whether a particular control function or calculation is done, by the code or generic control system (GCS), the text indicates (CODE) or (GCS). Note that agreement between the order and function of the control system variables described here and their use in the control systems depends on choices made by the control system modeler. It is recommended that control systems use the variables and models in a manner consistent with their intended function as described here.

6.1 Reactor Protective System

The CENTS Reactor Protective System (RPS) model initiates reactor trip on any one of twenty system conditions, in addition to manual trip by the operator. A complete list of the trips, which are available, and those implemented for a typical plant is given in Table 6.1.

The system models define the form of the initiating condition.

A typical example is:

(SYSTEM STATE) exceeds (TRIP SETPOINT)

6.1.1 User Input and Control

The user may control the Reactor Protective System as follows.

a. CTL_CORE_CONTROL_AUTO (logical)

= T, (normal setting) RPS operational. Reactor may be tripped automatically by the RPS or manually by the user.
= F, RPS disabled. Manual trip only.

b. Trip setpoints – see Table 6.1 for a list of the setpoint variable names and their values, which may be changed to alter the trip setpoints.

The database values associated with the setpoints listed in Table 6.1 are normally selected to be appropriate for full-power operation. Operation at other states may require changes to the setpoints for proper control. The user may change any setpoint or override any trip signal as described below.

c. Trip overrides – see Table 6.1 for variable names ending in _OR.

Override variable = 1.0, the trip signal malfunctions, fails to actuate on the corresponding trip-initiating condition. Reactor may still trip on another condition, or manually (GCS).
= 0.0, normal setting.

d. Trip delay time (seconds) – see Table 6.1 for variable names ending in _DELAY or _DL

e. Manual trip. The reactor may be manually tripped at any time by setting the logical variable CTL_CORE_TRIP = T.

f. Reset. The user must reset the RPS to clear the trips as discussed in Note f of Table 6.1.

6.1.2 Observable Variables

The user may observe the operation of the RPS as follows.

a. Reactor trip. To determine whether or not the reactor has been scrammed, refer to the standard output (Section 7.6.1), or observe the variable

CTL_CORE_TRIP = T, scram
= F, no scram.

b. Reactor trip signals. To determine which of the conditions listed in Table 6.1 initiated trip, observe the status of the trip signals

CTL_CORE_TRIP_SIG(J) = T, signal issued
= F, signal not issued.

where J = 1,..., CTL_NUM_RPS (the total number of trip signals) for the trip signals in Table 6.1. Only the first trip affects this array or the entries in the GROUT output variable for the RPC controllers since the first trip puts all RPS controllers in manual mode.

c. Time elapsed since reactor trip = CTL_TIME_CORE_TRIP.

d. Power fraction at time of trip = POW_CORE_TRIP_FRACTION (has a value of 1.0 for full power operation if the reactor has not tripped).

6.1.3 *High Power Rate-of-Change Trip (GCS)*

An option is available to generate a reactor trip signal when the rate-of-change of power, measured in decades/minute exceeds the setpoint CTL_CORE_HI_POWER_SUR_TRIP. Since this is a Start-Up-Rate protective mode, the trip signal may be inhibited at power fractions:

below CTL_CORE_HI_POWER_SUR_BYPS(l) and

above CTL_CORE_HI_POWER_SUR_BYPS(2).

Typical values for the inhibit points are [ ], respectively.

Table 6.1

Reactor Protective System Trip Signals and Trip Initiating Conditions

Trip [a]	Description	System Variable	Setpoint Variable (Override Variable)	Units/ Comments
1	High power fraction	CTL_CORE_POWER_FRACTION or POW_EXCORE_POWER_AV	CTL_CORE_HI_POWER_FRAC_TRIP (CTL_CORE_HI_POWER_FRAC_TRIP_OR) (CTL_CORE_HI_POWER_FRAC_TRIP_DL)	 sec
2	High power startup rate of change (SUR)	Startup rate computed by CENTS	CTL_CORE_HIGH_POWER_SUR_TRIP (CTL_CORE_HI_POWER_SUR_TRIP_OR) (CTL_CORE_HI_POWER_SUR_TRIP_DL)	 sec
	Parameter to inhibit or modify SUR trip.		CTL_CORE_HI_POWER_SUR_BYPS(1) CTL_CORE_HI_POWER_SUR_BYPS(2)	
3	Low pressurizer pressure	PRESS(N)	CTL_CORE_LOW_PRZR_PRES_TRIP (CTL_CORE_LOW_PRZR_PRES_TRIP_OR) (CTL_CORE_LOW_PRZR_PRES_TRIP_DL)	psia sec
4	High pressurizer pressure	PRESS(N)	CTL_CORE_HI_PRZR_PRES_TRIP (CTL_CORE_HI_PRZR_PRES_TRIP_OR) (CTL_CORE_HI_PRZR_PRES_TRIP_DL)	psia sec
5	High pressurizer level	CTL_PRZR_LEVEL_INST or CTL_PRZR_ILEVEL	CTL_CORE_HI_PRZR_LEVEL_TRIP (CTL_CORE_HI_PRZR_LEVEL_TRIP_OR) (CTL_CORE_HI_PRZR_LEVEL_TRIP_DL)	frac sec
6	Over-temperature thermal margin	CTL_T_AVG, PRESS(N)	CTL_CORE_OVER_TEMP_MRGN_TRIP (CTL_CORE_OVER_TEMP_MRGN_TRIP_OR) (CTL_CORE_OVER_TEMP_MRGN_TRIP_DL)	b sec

Trip [a]	Description	System Variable	Setpoint Variable (Override Variable)	Units/ Comments
7	Over-power thermal margin	CTL_T_AVG	CTL_CORE_OVER_POWER_MRGN_TRIP (CTL_CORE_OVER_POWER_MRGN_TRIP_OR) (CTL_CORE_OVER_POWER_MRGN_TRIP_DL)	c sec
8	Low reactor coolant flowrate	P_FLOW in each cold leg CTL_RCP_FLOW_STPOINT computed by CENTS	CTL_CORE_RCSFLOW_FRAC_TRIP (CTL_CORE_RCSFLOW_FRAC_TRIP_OR) (CTL_CORE_RCSFLOW_FRAC_TRIP_DL)	frac d sec
9	Core trip on SIAS	CTL_SIAS_TRIP	CTL_CORE_SIAS_TRIP (CTL_CORE_SIAS_TRIP_OR) (CTL_CORE_SIAS_TRIP_DL)	e sec
10	Low steam generator pressure	SGS_P (in each SG)	CTL_CORE_LOW_SG_PRES_TRIP (CTL_CORE_LOW_SG_PRES_TRIP_OR) (CTL_CORE_LOW_SG_PRES_TRIP_DL)	 sec
11	Low steam generator level	SGS_HTI or CTL_SG_ILEVEL	CTL_CORE_LOW_SG_LEVEL_TRIP (CTL_CORE_LOW_SG_LEVEL_TRIP_OR) (CTL_CORE_LOW_SG_LEVEL_TRIP_DL)	frac (any SG) sec
12	High steam generator level	SGS_HTI or CTL_SG_ILEVEL	CTL_CORE_HI_SG_LEVEL_TRIP (CTL_CORE_HI_SG_LEVEL_TRIP_OR) (CTL_CORE_HI_SG_LEVEL_TRIP_DL)	 sec
13	Steam, feedwater, flowrate mismatch coincident with low SG level	SGS_WOUTSG - FWS_FLOW, SGS_HTI or CTL_SG_ILEVEL	CTL_STEAM_FEED_MISMATCH_TRIP (CTL_STEAM_FEED_MISMATCH_TRIP_OR) (CTL_STEAM_FEED_MISMATCH_TRIP_DL) CTL_STEAM_FEED_MISMATCH_BYPS	frac level sec lb/sec

Trip [a]	Description	System Variable	Setpoint Variable (Override Variable)	Units/ Comments
14	Core trip on turbine trip	CTL_TURB_TRIP_TIME	CTL_CORE_TURB_TRIP_DELAY (CTL_CORE_TURB_TRIP_DELAY_OR)	sec
	Parameter to modify trip		CTL_CORE_TURB_TRIP_BYPS	
15	High containment pressure	CONT_PRES	CTL_CORE_HI_CONT_PRES_TRIP (CTL_CORE_HI_CONT_PRES_TRIP_OR)	
			(CTL_CORE_HI_CONT_PRES_TRIP_DL)	sec
16 – 25	User defined	Selected by System Modeler	CTL_CORE_USER_DEFINED_TRIP (CTL_CORE_USER_DEFINED_TRIP_OR)	
			(CTL_CORE_USER_DEFINED_TRIP_DL)	sec
			(CTL_MISC_TRIP_DELAYS(20))	sec

Footnotes to Table 6.1 (For a Typical Control System)

a. Number of trip subscript for the CTL_CORE_TRIP_SIG array (up to 25 entries). This order depends on the control system assignments in the array CTL_RPS_CONTROLLERS being consistent with that in Table 6.1.

b. Thermal margin over-temperature trip setpoint computed by generic controller models as

[ ]

where

T	= maximum T_{avg}
T'	= CTL_CORE_OVER_POWER_MARGIN_TRIP
P	= Pressurizer pressure
$\Delta T(rated)$	= CTL_CORE_USER_DEFINED_BYPS(3)
P'	= CTL_CORE_OVER_TEMP_MARGIN_TRIP
K_i	= constants
τ_i	= time constants
$F(\Delta I)$	= bias for core axial offset (shape index)

c. Thermal margin over-power trip setpoint computed by generic controller model as

[ ]

where K_i = constants

τ_i = time constants

Table 6.1 Footnotes (Continued)

d. Reactor coolant flow trip has different logical conditions (GCS) for tripping depending on the core power fraction permissive state

CTL_CORE_USER_DEFINED_BYPS(2)

power ≤ permissive, 2 out of 3 loops must fall below the setpoint to get a trip
power > permissive, any loop flow below the setpoint will cause a trip

The trip setpoint CTL_RCP_FLOW_STPOINT is computed (CODE) as the product of

CTL_CORE_RCSFLOW_FRAC_TRIP

and the rated pump delivery rate given by

RATED_VOL_FLOW · RATED_PUMP_DENS.

e. Core trips on SIAS unconditionally (GCS).
SIAS trip model described in Section 6.5.

f. All core trips are coded in the generic control system to stay tripped until reset, even if the condition that caused the trip is removed. They must be manually reset:

i) Set CTL_CORE_TRIP = F or CTL_CORE_CONTROL_AUTO = F

and

ii) Set CTL_CORE_TRIP_SIG(I) for trip(s) I to be reset to F

Alternatively,

iii) RESTore the full power normal operation state or any other pre-trip state.

6.2 Pressurizer Level Control System and Chemical & Volume Control System

The pressurizer level control system (PLCS) supplies level signals for control of the chemical and volume control system (CVCS) and for limited control of the pressurizer heaters. The PLCS model in CENTS performs the following functions as specified in the generic controller models:

1. Dynamically determines the programmed pressurizer level setpoint as specified in Figure 6.1 for a typical control system.
2. Maintains pressurizer level at the programmed setpoint during normal steady state operation and transients (within the capacity of the CVCS).
3. Modifies charging pump flowrate.
4. Modifies letdown flowrate.
5. Energizes or de-energizes the proportional and backup heaters.
6. Provides auxiliary pressurizer spray for manual operator control as needed.
7. Provides a means of controlling the reactor coolant boric acid concentration.

A typical pressurizer level control system is depicted in Figure 6.2.

6.2.1 Programmed Pressurizer Level (GCS)

To properly maintain the pressurizer water level at all power levels, the water level in the pressurizer is programmed as shown in Figure 6.1 for a typical control system. CENTS variable names for the independent variable, level setpoints, and programmed level setpoint are shown in Figure 6.1.

6.2.2 Pressurizer Instrumentation Level Indication (CODE)

Level instrumentation located on the pressurizer determines the pressurizer water level by means of a differential pressure reading. The instrument is calibrated to process this reading into an indicated water level at the reference conditions of the pressurizer. During a transient that departs from the reference conditions, the instrument's indicated water level deviates from the actual level in the pressurizer.

CENTS determines the instrument level indication (CTL_PRZR_LEVEL_INST, feet; CTL_PRZR_ILEVEL, fraction) as a function of the pressurizer's transient liquid mass and

coolant specific volumes {MASS_LIQ(N), SVOL_LIQ(N), SVOL_STM(N), where N = 1,..., NODE_PRZR}. The reference coolant specific volumes at which the instrument is calibrated are

CTL_PRZR_LIQ_SPVOL_REF and

CTL_PRZR_STM_SPVOL_REF.

The actual equations are given in Section 4.19.1.

6.2.3 Pressurizer Level Error Signal (GCS)

A typical control system compares the programmed level with the measured level, as in Figure 6.2. As described below, the resulting error signal, CTL_PRZR_LEVEL_ERROR, is used to control the operation of the CVCS.

6.2.4 Letdown and Charging - Automatic Control (GCS)

Figure 6.2 shows the operation of a typical PLCS. A low pressurizer level error signal reduces letdown flow and/or increases charging flow. A high level indication increases the letdown flow and/or decreases charging flow. In some plants it also energizes the pressurizer backup heaters. Table 6.2 shows the various charging and letdown setpoints, with CENTS variable names. Upon receipt of SIAS, all charging pumps are turned on and letdown flow is shut off; both actions are subject to manual override (Section 6.2.5).

6.2.5 Letdown and Charging - Manual Control

The user may exercise manual control, overriding the automatic controls described above. Separate manual overrides are provided, for letdown and the charging pumps.

Control of letdown is determined by the logical variable

CTL_LDN_AUTO = T for automatic control as described above,

= F for manual control.

When letdown is under manual control, the user may manipulate the letdown flow fraction, via the variable

CTL_LETDOWN_FRAC(J), J = 1, RCS_NUMOUT_LDNS (1 in most plants).

Then the letdown flowrate in lbm/sec is (CODE)

$$\text{LDNS_RCS_FLOW(J)} = 0.137 \cdot \text{CTL_LETDOWN_FRAC(J)} \cdot \text{CTL_CVCS_LDN_W_GPM(2)}$$

and

$$\text{CTL_LDN_FLOW} = \sum_{J} \text{LDNS_RCS_FLOW(J)},\ J = 1,\ldots, \text{RCS_NUMOUT_LDNS}.$$

Full letdown flow is defined in Table 6.2.

Control of the charging pumps is determined by

CTL_CH_PUMP_AUTO(J) = T for automatic control as described above,
= F for manual control

where J is the pump number (J = 1,..., NUM_CHGS_PUMPS). Under manual control, the user may manipulate the charging pump flowrate fraction via the variable,

CTL_CH_PUMP_FRAC(J) for pump J.

The total flowrate for each charging pump J is then a function of the rated flowrate and the flowrate fraction, or (CODE)

CTL_CH_PUMP_FRAC(J) · CTL_CH_PUMP_W_RATED(J).

The rated flowrate for the charging pumps is given in Table 6.2. The total flowrate for all pumps (lb/sec) is

$$\text{CTL_CH_FLOW} = 0.137\ \Sigma\ \text{CTL_CH_PUMP_FRAC(J)} \cdot \text{CTL_CH_PUMP_W_RATED(J)}.$$

6.2.6 *Delivery of Charging Flow*

The charging flow is normally delivered to one or more cold legs. The operator may divert a portion of the charging flow to the pressurizer auxiliary spray line.

In CENTS, the user may control charging flow delivery to the cold legs and to the auxiliary spray by means of the flow control valves' fractional openings CTL_CHV_FRAC(J), for injection paths J = 1 to J = RCS_NUMIN_CHGS + 1 (number of charging injection locations in RCS + 1 for the auxiliary spray).

The charging flowrate to RCS location I is (CODE)

$$\text{CHGS_RCS_FLOW(I)} = \text{CTL_CH_FLOW} * \frac{\text{CTL_CHV_RAREA(I)} * \text{CTL_CHV_FRAC(I)}}{\sum_{J} \text{CTL_CHV_RAREA(J)} * \text{CTL_CHV_FRAC(J)}}$$

where the summation runs from 1 to RCS_NUMIN_CHGS+1. The array CTL_CHV_RAREA represents the relative flow areas of the charging system valves to the RCS and auxiliary spray.

The auxiliary spray flowrate is (CODE)

$$\text{CHGS_ASPRAY_FLOW} = \text{CTL_CH_FLOW} * \frac{\text{CTL_CHV_RAREA(K)} * \text{CTL_CHV_FRAC(K)}}{\sum_{J} \text{CTL_CHV_RAREA(J)} * \text{CTL_CHV_FRAC(J)}}$$

where K = RCS_NUMIN_CHGS+1, and the summation runs from 1 to K.

6.2.7 *Regenerative Heat Exchanger (CODE)*

The regenerative heat exchanger (RHEX) transfers heat from the letdown stream to the charging stream. CENTS computes the heat transfer rate on the basis of the mean stream temperatures and a user-specified overall heat transfer coefficient. This coefficient should be chosen to produce the heat exchange rate reported for the RHEX at normal letdown and charging flows. That is,

[ ]

where

hA = overall heat transfer coefficient
= CTL_HA_REG_HEAT_X

W_c = charging flow (lbm/sec)

$T_{c,in}$, $T_{c,out}$ = charging flow inlet and outlet temperatures

$T_{L,in}$, $T_{L,out}$ = letdown flow inlet and outlet temperatures.

The charging water temperature and enthalpy at the RHEX inlet, CTL_CH_T(l) and CTL_CH_H(l), remain constant throughout the transient, unless changed by the user.

The concentrations of boron, iodine, particulates and xenon in the charging stream are user-defined via the variables listed in Table 6.2. See Tables 7.14 and 7.15 for information on other species of solutes and non-condensibles.

6.2.8 *Observable Variables*

The user may observe the operation of the PLCS/CVCS by means of the variables in Table 6.3.

Table 6.2

Pressurizer Level Control System Setpoints

DESCRIPTION	VARIABLE NAME	UNIT+
Programmed level:		
Temp. for level program	CTL_PRZR_PLEVEL_TEMP(I)*	°F
Programmed level	CTL_PRZR_PLEVEL(I)*	Frac
Indicated level:		
Reference liquid specific volume	CTL_PRZR_LIQ_SPVOL_REF	ft^3/lbm
Reference steam specific volume	CTL_PRZR_STM_SPVOL_REF	ft^3/lbm
Rated letdown:		
Full flow	CTL_CVCS_LDN_W_GPM(2)	gpm
Number of paths	RCS_NUMOUT_LDNS (≤ 2)	
Rated charging:		
Maximum flow	CTL_CH_PUMP_W_RATED(J)	gpm
Number	NUM_CHGS_PUMPS (≤ 4) (J = 1,..., NUM_CHGS_PUMPS)	
Charging flow distribution:		
Fractional valve positions	CTL_CHV_FRAC(K)	frac
Relative valve areas	CTL_CHV_RAREA(K)	frac
Number of injection sites	RCS_NUMIN_CHGS (≤ 4) (K = 1,..., RCS_NUMIN_CHGS)	
Normal operation:		
Charging flow fraction	CTL_CH_PUMP_FRAC(J)	frac
Letdown flow fraction	CTL_LETDOWN_FRAC(J)	frac

Table 6.2 (Continued)

Pressurizer Level Control System Setpoints

DESCRIPTION	VARIABLE NAME	UNIT+
Charging pump solutes		
Boron concentration	CHGS_RCS_BORON	ppm
Iodine concentration	CHGS_RCS_IOD	mC/sec
Particulate concentration	CHGS_RCS_PART	mC/sec
Xenon concentration	CHGS_RCS_XEN	mC/sec
Regenerative heat exchanger:		
Inlet charging temperature	CTL_CH_T(1)	°F
Inlet charging enthalpy	CTL_CH_H(1)	Btu/lbm
Overall heat transfer coefficient	CTL_HA_REG_HEAT_X	Btu/sec-°F
Heater cutoff:		
Low level	CTL_LEVEL_HEATER_OFF	frac
Pressurizer heaters:		
Level setpoint (if used)	CTL_PRZR_BHLEVEL_SPOINT(I)*	frac
Charging pump setpoints:		
Pump no. 1 (if used)	CTL_CVCS_CH1_SPOINT(I)*	frac
Pump no. 2 (if used)	CTL_CVCS_CH2_SPOINT(I)*	frac
Pump no. 3 (if used)	CTL_CVCS_CH3_SPOINT(I)*	frac
Pump no. 4 (if used)	CTL_CVCS_CH4_SPOINT(I)*	frac
Letdown setpoints:		
Level setpoints (if used)	CTL_CVCS_LDN_ZSPOINT(I)*	frac
Flowrate (if used)	CTL_CVCS_LDN_W_GPM(I)*	gpm

* Upper and lower setpoints (I = 1,2)

+ Units for setpoints may be defined differently in some controllers.

Table 6.3

Output Variables for PLCS and CVCS

Variable	Definition+
CTL_T_AVG	Loop average coolant temperature, °F (auctioneered-high or system-average)
CTL_PRZR_PROG_LEVEL	Programmed pressurizer level, frac
CTL_PRZR_LEVEL_INST	Pressurizer instrument level reading, ft
CTL_PRZR_ILEVEL	Pressurizer instrument level reading, frac
LEVL_MIX(N)	Actual pressurizer coolant level, ft (N = 1,..., NODE_PRZR)
CTL_PRZR_LEVEL_ERROR	Pressurizer level error signal, fraction
CTL_CH_FLOW	Total delivery rate of charging pumps, lbm/sec
CHGS_RCS_FLOW	Charging flow to cold leg, lbm/sec
CHGS_ASPRAY_FLOW	Auxiliary spray flowrate, lbm/sec Solutes are the same as those for charging in Table 6.2.
CTL_CH_T(K)	Charging flow temperature, °F; K = 1 at RHEX inlet , K = 2 at cold leg
CTL_CH_H(K)	Charging flow enthalpy, Btu/lbm; see above
CTL_LDN_FLOW*	Letdown flow demanded by control system, lbm/sec
CTL_LDN_T(K)	Letdown flow temperature, °F; K = 1 at RHEX inlet, K = 2 at RHEX outlet.
CTL_LDN_H(K)	Letdown enthalpy, Btu/lbm; see above.
LDNS_RCS_FLOW	Letdown flow from cold leg, lbm/sec

* This doesn't include flow when there is a letdown line break. See P_FLOW in Table 7.12.

\+ Units may be defined differently for variables calculated or used in controllers.

6.3 Pressurizer Pressure Control System

The pressurizer pressure control system (PPCS) maintains system pressure within specified limits by the use of pressurizer heaters and spray valves. Pressurizer pressure sensors provide input to the system.

During normal operation, a small group of heaters is proportionally controlled to maintain operating pressure. If the pressure falls below the proportional band, all of the heaters are energized. Above the normal operating range, the spray valves are proportionally opened to increase the spray flowrate as pressure rises. A small, continuous spray flow is maintained (CODE) through the spray lines at all times to keep the lines warm, to reduce thermal shock as the control valves open, and to ensure that the boric acid concentration in the coolant loops and pressurizer is in equilibrium. A low pressurizer water level de-energizes all heaters, for heater protection. Generation of the pressurizer pressure control system signal for a typical plant is described in Figure 6.4.

6.3.1 Pressurizer Heaters (GCS)

The pressurizer heaters in CENTS are controlled through their voltage supply. For a typical automatic heater controller, voltage to the proportional heater group varies continuously with pressure within the proportional band, while the backup heater group receives either full or zero voltage. The full voltage rating of both groups is given by CTL_PRZR_HEATERS_VOLT.

Automatic vs. manual control of the heaters is set by

CTL_HEATERS_CONTROL_AUTO = T, Automatic,
= F, Manual.

In the automatic mode, the proportional and backup heaters operate as specified by the modeler. The pressure setpoint variables are shown in Figure 6.3 and Table 6.4. If the pressurizer instrumentation water level reading (see Section 6.2.2) indicates a level below the cutoff setpoint (Table 6.4), both heater groups are de-energized regardless of system pressure.

In the manual mode, the above control logic is bypassed. Heater power remains constant, unless it is controlled by the user by changing either or both of:

CTL_VOLT_PROP	Voltage to proportional heaters,
CTL_VOLT_BACK	Voltage to backup heaters.

6.3.2 Pressurizer Spray

Pressurizer spray control may be in automatic or manual mode, depending on

CTL_PRZR_SPRAY_CONTROL_AUTO = T, Automatic,
= F, Manual.

In the automatic mode, the admission valves for pressurizer spray from the cold legs operate as defined by the modeler with the setpoint variables in Table 6.4, and as shown for a typical control system in Figure 6.3 (GCS). A small bypass around each valve provides a minimum continuous flow even when the valves are closed (CODE).

In the manual mode, the spray valve positions remain constant, unless controlled directly by the user, through the spray valve signal variable:

VLV_PRZR_MSPRAY_SIG(J) for spray valve J,
J = 1,..., RCS_NUM_MSPRAYVLVS.

This variable represents the valve position signal, expressed as fraction (0-l) of the full-open position. The actual valve position is determined in response to the signal, and in accordance with the valves' dynamic characteristics (GCS).

CENTS also provides an operator-controlled auxiliary spray as part of the charging system. See Section 6.2 for details.

6.3.3 Observable Variables

The user may observe the operation of the PPCS by means of the variables in Table 6.5.

Table 6.4

Pressurizer Pressure Control System Setpoints

DESCRIPTION	SETPOINT VARIABLE	UNIT+
Proportional heaters:		
Full on pressure	CTL_PRES_PHEATER_ON	psi
Cutoff pressure	CTL_PRES_PHEATER_OFF	psi
Number	NUM_PROP_HEATERS	
Backup heaters:		
Full on pressure	CTL_PRES_BHEATER_ON	psi
Cut off pressure	CTL_PRES_BHEATER_OFF	psi
Number	NUM_BACK_HEATERS	
All heaters:		
Supply voltage	CTL_PRZR_HEATERS_VOLT	V
Low level cutoff	CTL_LEVEL_HEATER_OFF	Frac
Main spray valves:		
Full on pressure	CTL_PRZR_SPRAY_PRES_ON	psi
Full off pressure	CTL_PRZR_SPRAY_PRES_OFF	psi
Number	RCS_NUM_MSPRAYVLVS	
Reference pressure	CTL_PRZR_REF_PRES	psia

+ Units may be defined differently for variables calculated or used in controllers.

Table 6.5

Observable Variables for PPCS

Variable	Definition
PRESS(NODE_PRZR)*	Pressurizer pressure, psia
PRSI_HEATER_VOLT_FRAC(J)	Pressurizer heater voltages, fraction J = 1, NUM_PROP_HEATERS (proportional heaters) J = NUM_PROP_HEATERS + 1,..., NUM_HEATERS (≤ 6) (backup heaters)
CTL_PRZR_HEATERS_VOLT	Supply voltage to pressurizer heaters, V
VLV_PRZR_MSPRAY(J)	Spray line valve positions, fraction of full-open area. See Table 7.28 for actual flow areas J = 1,..., RCS_NUM_MSPRAYVLVS (≤ 2)
P_FLOW_SPRAY	Total spray flowrate, lbm/sec (main and auxiliary)
P_ENTH_SPRAY	Spray specific enthalpy, Btu/lbm
P_BORON_SPRAY+	Spray boron concentration, ppm

* NODE_PRZR = Pressurizer node

\+ Solutes and non-condensibles in the main spray are determined by the variables for the source path (normally Path 143) discussed in Chapter 7.

6.4 Primary Coolant System Relief Valves

6.4.1 Pressurizer Power Operated Relief Valves

The pressurizer's power-operated relief valves (PORVs) may be controlled either automatically or manually. In automatic mode each PORV vents to the quench tank and opens when the pressurizer pressure exceeds the PORV's pressure setpoint given in Table 6.6 (GCS).

The user initiates manual control by means of the logical variable

CTL_PORV_AUTO(J) Automatic control of PORV
(J = 1,..., RCS_NUM_PORVS); T, Auto; F, Manual.

The valve position (fraction open) is controlled by the variable

VLV_PRZR_PORV_SIG(J), J = 1,..., RCS_NUM_PORVS

which signals the desired position for the valve.

The actual valve position (fraction open) is given by VLV_PRZR_PORV(J), J = 1, RCS_NUM_PORVS. Any difference between the signal to the valve and the valve position is due to the valve handler, an example of which is described in Table 6.6 (GCS).

The PORVs can be isolated using a pair of motor operated block valves (MOVs). To control the isolation MOV for a PORV set its position (fraction open) via the variable

VLV_PRZR_MOV(J), J = 1,..., RCS_NUM_PORVS.

PORV flow is determined by the smaller of the MOV and PORV open flow area (CODE; See Table 7.29).

6.4.2 *Pressurizer Safety Valves (GCS)*

The pressurizer safety valves in CENTS are driven by the pressurizer pressure, PRESS (NODE_PRZR). The setpoint variables for the valves are given in Table 6.6.

The safety valve position (fraction open) is given by

VLV_PRZR_SAFETY(J), J = 1,..., RCS_NUM_SAFETYVLVS.

The valve behavior is described in Table 6.6. The pressurizer safety valves vent to the quench tank.

6.4.3 *Pressurizer Vent Valves*

A vent line provides direct operator (user) control of pressurizer pressure and inventory, and the option of venting to containment or to the quench tank. The valves on these lines have only manual controls.

For pressurizer venting to containment the variable

$$0.0 \leq \text{VLV_PRZR_CONT} \leq 1.0$$

controls the valve position (fraction open).

For pressurizer venting to the quench tank, the variables

$$0.0 \leq \text{VLV_PRZR_QT(1)} \leq 1.0$$
$$0.0 \leq \text{VLV_PRZR_QT(2)} \leq 1.0$$

are the fractional flow areas of two valves in series directly controlled by the user. Flow through this line is determined by the smaller of the two areas.

6.4.4 *Upper Head Vent Valves*

Two vent lines provide direct operator (user) control of upper head pressure and inventory, and the option of venting to containment or to the quench tank. The valves on these lines have only manual controls.

For upper head venting to containment, the cue

$$0.0 \leq \text{VLV_UHEAD_CONT} \leq 1.0$$

represents the user's signal to open or close the valve to the corresponding fractional flow area.

For upper head venting to the quench tank, the variables

$$0.0 \leq \text{VLV_UHEAD_QT(1)} \leq 1.0$$
$$0.0 \leq \text{VLV_UHEAD_QT(2)} \leq 1.0$$

are the fractional flow areas, directly controlled by the user, of two valves in series. Flow through this line is determined by the smaller of the two areas.

6.4.5 *Observable Variables*

The flowrates through the pressurizer vent and relief valves are given by the following:

PORV's	RCS_P_FLOW_PORV(J), J = 1,RCS_NUM_PORVS
Safety valves	RCS_P_FLOW_SAFETY(J), J = 1,RCS_NUM_SAFETYVLVS
Vent to containment	P_FLOW_PRZR_CONT
Vent to quench tank	RCS_P_FLOW_QT.

The flowrates for fluid and non-condensibles through the upper head vent valves are given by

To containment	P_FLOW_UHEAD_CONT
	P_NONC_UHEAD_CONT
To quench tank	P_FLOW_UHEAD_QT
	P_NONC_UHEAD_QT

.

Additional information for the upper head and pressurizer vent valves is given by the arrays for nodal and flowpath information discussed in Sections 7.2.1 and 7.2.2 noting that the nodes upstream of these valves are NODE_UHEAD and NODE_PRZR. More complete information on solutes and non-condensibles in the primary system is given in Section 7.2.7. The actual flow areas of all valves in the primary system are given by the variables listed in Table 7.29.

Table 6.6
Primary Coolant System Relief Valve Setpoints

SETPOINTS

DESCRIPTION	SETPOINT VARIABLE	UNIT
PORV:		
Opening pressure	CTL_PORV_PSET(I)*	psia
Number	RCS_NUM_PORVS (≤ 4)	
Safety Valves:		
Full closed pressure	CTL_PSV_PSET_CLOSE(J)**	psia
Full open pressure	CTL_PSV_PSET_OPEN(J)**	psia
Reclosing pressure	CTL_PSV_PSET_BLDN(J)**	psia
Number	RCS_NUM_SAFETYVLVS (≤ 4)	

VALVE HANDLERS

VALVE	DESCRIPTION (GCS)
PORV	Opens linearly as a function of time in a given time when PRESS (PRZR_NODE) exceeds the setpoints. Closes in a similar manner when pressure falls below the setpoint.
Safety Valve	Opens linearly as a function of pressurizer pressure between the two setpoints. Closes in a like manner.

* I = 1,..., RCS_NUM_PORVS

** J = 1,..., RCS_NUM_SAFETYVLVS

6.5 Safety Injection System

The safety injection system (SIS) supplies borated water for emergency core cooling in the event of a loss-of-coolant accident. The system consists of high pressure safety injection (HPSI) pumps, low pressure safety injection (LPSI) pumps, and safety injection tanks (SITs). A safety injection actuation signal (SIAS) is generated on low pressurizer pressure and, in some plants, on deteriorating conditions. The SIAS typically functions to start the HPSI and the LPSI pumps, open the SIS discharge valves to each of the cold legs, start all charging pumps and shut off letdown.

6.5.1 Safety Injection Actuation Signal (GCS)

The criteria for SIAS are defined by the modeler using the setpoint variables in Table 6.7. A typical system is described in Table 6.8. One may prevent SIAS by adjusting the setpoints, or by overriding the automatic control:

CTL_SIAS_CONTROL_AUTO = F, SIAS override,
= T, SIAS automatic control.

The user may manually generate SIAS by setting

CTL_SIAS_TRIP = T.

6.5.2 HPSI and LPSI Flows (CODE)

Upon receipt of SIAS, CENTS imposes an appropriate time delay before starting the HPSI/LPSI pumps. This delay is given by the database variable CTL_SIS_DELAY. It simulates the delays associated with diesel startup (assuming loss of offsite power), load sequencing and HPSI/LPSI pump startup.

Following the delay, CENTS calculates HPSI and LPSI flows to the RCS_NUMIN_SIS injection locations. The flows are determined from user-supplied tables for pump delivery rate versus discharge pressure. The user also specifies, in the database, the split of HPSI

and LPSI deliveries among the delivery points, the number of available pumps of each type, and the specific enthalpy and boron concentration.

Using the flow split variables, the flowrates can be apportioned unevenly, to account for the different piping geometries and flow losses in the SI lines. (The flow splits need not sum to unity.) The number of available pumps provides an easy means of changing the availability of SI pumps.

CENTS provides multiple flow delivery tables as a function of the number of pumps operating. This facilitates modeling of non-linear flow behavior as the number of pumps operating is increased. Multiple flow delivery tables, CTL_HPSI_NPOINTS_TAB or CTL_LPSI_NPOINTS_TAB long, are provided in the flow tables CTL_HPSI_FLOW_TABLE or CTL_LPSI_FLOW_TABLE. The number of pumps CTL_HPSI_PUMP_NUM and CTL_LPSI_PUMP_NUM select the table to be used. Any number of tables may be used within the limits of at least two entries per table and no more than 30 total entries.

The input variables used by the HPSI and LPSI flow models are listed in Table 6.9.

6.5.3 Safety Injection Tanks (CODE)

The SITs (accumulators) provide a passive means of injecting borated water into the RCS following a loss-of-coolant accident. Each tank discharges into one cold leg, when the SIT-to-cold leg pressure difference permits; i.e., when

$$\Delta P = P_{gas} + P_{elev} - P_{CL} > 0$$

where

P_{gas} = SIT gas pressure, psia

P_{elev} = SIT discharge line elevation head, psia

P_{CL} = cold leg pressure, psia.

CENTS keeps track of the liquid inventory and gas pressure in each tank during the SIT discharge. The discharge rate is

[ ]

where

γ	= gas specific heat ratio (isentropic constant)
Δt	= time step size, sec
v_f	= liquid specific volume, ft^3/lbm
V_{gas}	= gas volume, ft^3

and C_s is a discharge coefficient,

[ ]

where A = discharge line area, ft^2

g = 32.174 lbm-ft/lbf-sec^2

k = frictional loss factor, dimensionless.

Each SIT discharge line has an isolation valve that isolates the tank during system depressurization and cooldown. The status of each valve may be user-controlled at any time. Operator control of the tank nitrogen gas pressure (adjustment or venting) may be simulated by the user through direct manipulation of the gas pressure.

Gas pressure during SIT discharge follows the expansion law, [ ]

CENTS uses the variables listed in Table 6.10 for the SIT flow calculations. Table 6.11 provides a complete list of the observable variables.

6.5.4 *Shudown Cooling Return Flow Via SI Lines (CODE)*

When Shutdown Cooling (SDC or RHR) is active, it is bled from the hot side of the RCS loop, and returns via the SI lines to the cold legs with lower enthalpy. The SDC flows are user-controlled boundary conditions on the RCS.

CENTS provides two SDC flowpaths. Either one or both (RCS_NUMOUT_SDC = 1 or 2) are typically connected to the hot leg nodes. The SDC bleed flowrate for these paths is input as SDC_RCS_FLOW(i). The SDC enthalpy and the concentrations of boron and other solutes are determined by CENTS, based on the upstream conditions in the hot legs.

The return flow in each SI line (j) is CTL_SDC_SPLIT(j) * Σ,SDC_RCS_FLOW(i), where CTL_SDC_SPLIT are input fractional flow splits to the injection points, (need not sum to 1.0). The return flow enthalpy is the averaged bleed enthalpy, reduced by the input CTL_SDC_DH. The return flow concentrations solutes equals those of the bleed flow.

Table 6.9 summarizes the input variables for Shutdown Cooling flow.

6.5.5 *SIS Flow - Combined HPSI, LPSI, SIT and SDC Flows (CODE)*

The net SIS flow delivered to each injection location is

$$W_{SIS} = W_{SI\,pumps} + W_{SIT} + W_{SDC}$$

with the following specific enthalpy and boron concentration:

$$H_{SIS} = (W_{SI\,pumps} H_{SI\,pumps} + W_{SIT} H_{SIT} + W_{SDC} H_{SDC}) / W_{SIS}$$

$$B_{SIS} = (W_{SI\,pumps} B_{SI\,pumps} + W_{SIT} B_{SIT} + W_{SDC} B_{SDC}) / W_{SIS}$$

6.5.6 *Observable Variables*

The user may observe the operation of the safety injection system through the variables listed in Table 6.11.

Table 6.7

Safety Injection System Setpoints

DESCRIPTION	SETPOINT VARIABLE	UNIT+
Trip Setpoints:		
Low pressurizer pressure SIAS trip	CTL_SIAS_PRZR_PRES_LOW	psia
High steamline/header differential pressure	CTL_SIAS_SL_SH_DP	psid
Low containment pressure SIAS trip	CTL_SIAS_HI_CONT_PRES	psia
Low T_{avg}	CTL_SIAS_LOW_TAVG	°F
Low steamline pressure	CTL_SIAS_LOW_SL_PRES	psia
Delay HPSI and LPSI for diesel generator startup:	CTL_SIS_DELAY	sec

Number of Safety injection locations RCS_NUMIN_SIS (≤ 8)

+ Units may be defined differently for variables calculated or used in controller models.

Table 6.8

Safety Injection Actuation Signal

Typical 3 Loop Plant (GCS)

1. High Containment pressure

   CONT_PRES > CTL_SIAS_HI_CONT_PRES

2. Low pressurizer pressure

   PRESS(PRZR_NODE) < CTL_SIAS_PRZR_PRES_LOW

3. High steamline differential pressure: 2/3 loops I

   SGS_P(I) - MSLH_P > CTL_SIAS_SL_SH_DP

4. High steam flow (2/3 loops I) in coincidence with low steam-line pressure (2/3 loops I) or low T_{avg} (2/3 loops I)

   a. Steam flow setpoint depends on turbine demand CTL_TURB_DEMAND

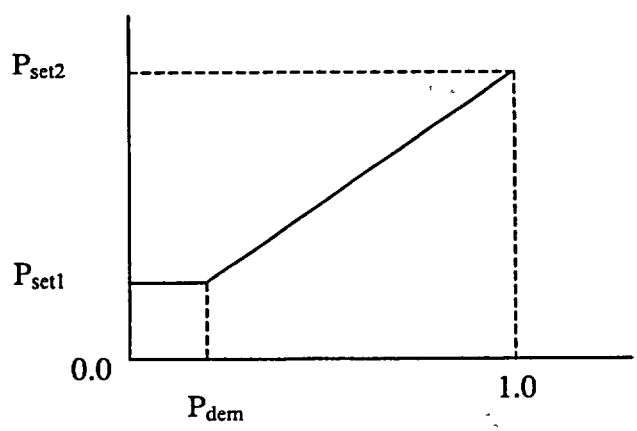

CTL_TURB_DEMAND

Table 6.8 (Continued)

b. High steam flow (2/3 loops I)

SGS_WOUTSG(I) *3 > Steam flow setpoint
CTL_TURB_STEAM_RATED

c. Low steam-line pressure (2/3 loops I)

$$\left(\frac{1+\tau_1 s}{1+\tau_2 s}\right) \quad \text{MSLH_PSL(I)} < \text{CTL_SIAS_LOW_SL_PRES}$$

where

τ_1 = time constant
τ_2 = time constant

d. Low T_{avg} (2/3 loops I)**

$$\frac{\text{TEMP_LIQ(m)} + \text{TEMP_LIQ(n)}}{2} < \text{CTL_SIAS_LOW_TAVG}$$

where m = cold leg numbers

n = hot leg numbers

* Refer to primary and secondary system variable definitions Sections 7.2 and 7.3

** Refer to Figure 7.2

Table 6.9

Variables for HPSI, LPSI and SDC Flow Models

HPSI Flow:

CTL_HPSI_FLOW_TABLE(K)	Flowrate, gpm (K = 1, 2,...,m)+
CTL_HPSI_PRES_TABLE(K)	Back pressure, psia (K = 1,..., CTL_HPSI_NPOINTS_TAB)
CTL_HPSI_NPOINTS_TAB	Entries for each pump, ≤ 15
CTL_HPSI_PUMP_NUM	Number of available HPSI pumps
CTL_HPSI_SPLIT(J)	HPSI flow split to the injection locations (J = 1,..., RCS_NUMIN_SIS) (≤ 8)

LPSI Flow:

CTL_LPSI_FLOW_TABLE(K)	Flowrate, gpm (K = 1,...,n)++
CTL_LPSI_PRES_TABLE(K)	Back pressure, psia (K = 1,..., CTL_LPSI_NPOINTS_TAB)
CTL_LPSI_NPOINTS_TAB	Entries for each pump, ≤ 15
CTL_LPSI_PUMP_NUM	Number of available LPSI pumps
CTL_LPSI_SPLIT(J)	LPSI flow split to the injection locations (J = 1,..., RCS_NUMIN_SIS) (≤ 8)

SDC Flow:

SDC_RCS_FLOW(I)	Flowrate, lbm/sec (I = 1,...,RCS_NUMOUT_SDC)
CTL_SDC_SPLIT(J)	SDC flow split to injection points (J = 1,..., RCS_NUMIN_SIS) (≤ 8)

Flow Properties:

CTL_SIS_HLPSI_H	HPSI / LPSI flow enthalpy, Btu/lbm
CTL_SIS_HLPSI_BC	HPSI / LPSI flow boron concentration, ppm
CTL_SDC_DH	Shutdown Cooling enthalpy drop, Btu/lbm
CTL_SDC_H_MIN	SDC minimum return enthalpy, Btu/lbm

+m = multiple of CTL_HPSI_NPOINTS_TAB;
maximum = smaller of CTL_HPSI_NPOINTS_TAB · CTL_HPSI_PUMP_NUM or 45.
++n = multiple of CTL_PPSI_NPOINTS_TAB;
maximum = smaller of CTL_LPSI_NPOINTS_TAB · CTL_LPSI_PUMP_NUM or 45.

Table 6.10

Variables for SIT Model

Constants

CTL_SIT_ELEV_PRES(J)*	SIT discharge line elevation head (P_{elev}), psi
CTL_SIT_FLOW_COEFF(J)*	SIT discharge coefficient (C_s)
CTL_SIT_GAS_CONST	Gas specific heat ratio (γ)
CTL_SIT_LIQ_SPVOL(J)*	Liquid specific volume (v_f), ft^3/lbm
CTL_SIS_SIT_H	Liquid specific enthalpy (H_{SIT}), Btu/lbm
CTL_SIS_SIT_BC	Liquid boron concentration (B_{SIT}), ppm

Constant subject to user control

CTL_SIT_ISO_VALVE(J)*	SIT isolation valves = T, valve open = F, valve closed

Transient variables that require initial values

CTL_SIT_LIQ_VOLUME(J)*	SIT liquid volume (V_{liq}), ft^3
CTL_SIT_GAS_VOLUME(J)*	SIT gas volume (V_{gas}), ft^3
CTL_SIT_GAS_PRES(J)*	SIT gas pressure (P_{gas}) psia

* The subscript J refers to the safety injection tank that discharges to cold leg J, J = 1,..., NUM_CL_NODES (≤ 4).

Table 6.11

Observable Variables for Safety Injection System

Variable	Description
PRESS(K)	System nodal pressures. In particular K = NODE_PRZR for the pressurizer, and K = NODE_CL(J) for the cold legs
CTL_SIAS_TIME	Time elapsed since S.I. Actuation Signal
CTL_SIAS_TRIP	Safety Injection Actuation Signal = T, signal = F, no signal
CTL_SIT_LIQ_VOLUME(J)*	SIT liquid volume, ft^3
CTL_SIT_GAS_VOLUME(J)*	SIT gas volume, ft^3
CTL_SIT_GAS_PRES(J)*	SIT gas pressure, psia
SI_TANK_FLOW(J)*	SIT discharge flowrate, lbm/sec
SIS_RCS_FLOW(J)*	Combined safety injection to cold leg: Flowrate, lbm/sec
SIS_RCS_ENTH(J)*	Combined safety injection to cold leg: Specific enthalpy, Btu/lbm
SIS_RCS_ BORON (J)*	Combined safety injection to cold leg: Boron concentration, ppm.

* The subscript J refers to the safety injection tank that discharges to cold leg J, J = 1,..., NUM_CL_NODES.

6.6 Turbine Control and Steam Regulating Systems

6.6.1 Turbine Steam Demand and Admission Valve Response

The turbine steam demand, the positioning signal to the Turbine Admission Valve (TAV), and the resulting TAV open position, are determined based on the status of two user flags and the Turbine Trip signal. Table 6.13 summarizes the TAV opening calculation in CENTS. The shaded region in Table 6.13 represents the state during normal transient analysis.

The following subsections provide an in depth discussion of the details of Table 6.13.

6.6.1.1 Turbine Steam Demand (CODE)

The turbine steam demand, CTL_TURB_DEMAND, drives the Turbine Admission Valve (TAV) controllers. During the CENTS initialization (INITIAL; see Appendix D), the steam demand is initialized to a value such that the secondary heat load equals the primary heat generation. During the transient calculation, the turbine steam demand is determined in one of two ways, described below, depending on the user flag, CTL_TURB_CONTROL_LOAD. However, an active Turbine Trip signal will override this logic (Section 6.6.2).

If CTL_TURB_CONTROL_LOAD = F, the turbine steam demand is constant, except as reset by the user, or set during the initialization. This is the normal state for this flag.

If CTL_TURB_CONTROL_LOAD = T, CENTS computes the turbine steam demand such that it matches the heat load on the secondary system. This is a convenience model that is helpful for maintaining a balanced secondary side during tuning or testing. This model is not used for normal transient analysis. When this model is activated, it computes the steam demand as:

$$F_{TAV} = \frac{Q_{sec} / W_{Rat}}{H_{MSLH} - H_{FW}} \tag{6.1}$$

where

F_{TAV} = turbine steam demand (fraction), CTL_TURB_DEMAND

Q_{sec} = secondary system heat load (heat transfer from the primary minus heat losses to containment), SGS_HEAT_LOAD

W_{Rat} = rated turbine steamflow, CTL_TURB_STEAM_RATED

H_{FW} = feedwater specific enthalpy, calculated from mixed feedwater flowrate and enthalpy, FWS_FLOW(I) and FWS_ENTH(I) for all I

H_{MSLH} = main steamline header specific enthalpy, MSLH_H.

6.6.1.2 Positioning Signal to the Turbine Admission Valve (GCS)

The Turbine Admission Valve (TAV) positioning signal may be set automatically by the controllers, or manually by the user, based on the flag CTL_TURB_CONTROL_AUTO, as described below. However, an active Turbine Trip signal will override this logic (Section 6.6.2).

If CTL_TURB_CONTROL_AUTO = T, the TAV is in automatic control. The controllers generate the signal for the TAV opening (fractional valve position), based on the turbine steam demand (Section 6.6.1.1). Table 6.14 lists the variables used in conjunction with the TAV controller, and Table 6.15 describes a typical TAV signal controller. The resulting valve signal is a member of the array MSLH_VALVE_SIG, as described in Table 6.15.

If CTL_TURB_CONTROL_AUTO = F, the TAV is in manual control. The user specifies the valve positioning signal via the signal array MSLH_VALVE_SIG as described in Table 6.15. The signal remains constant until reset by the user.

6.6.1.3 Position of the Turbine Valve (GCS) and Steam Flow (CODE)

The actual valve position of the TAV is determined by the characteristics of its response to the positioning signal (Section 6.6.1.2). This is done via a valve position handler controller, if one is provided. If the TAV controller is not a valve "handler", then the

valve position is the same as the valve signal. The signals to the TAVs and their response characteristics are specified separately for normal operation and for Turbine Trip.

The actual TAV steam flow is dynamically calculated by CENTS as choked flow through the given valve flow area (position) at the thermodynamic conditions of the main steamline header (CODE). This calculation is performed for all modes of turbine control. Observable variables are listed in Table 6.21.

6.6.2 Turbine Trip (GCS)

CENTS generates an automatic Turbine Trip on a set of conditions defined by the user, e.g., Table 6.12. The user may disable the automatic Turbine Trip by

CTL_TURB_TRIP_AUTO = T, Auto trip possible,
= F, Auto trip disabled.

The turbine may be manually tripped at any time, independently of the above, by setting

CTL_TURB_TRIP = T.

The time elapsed since the Turbine Trip is CTL_TURB_TRIP_TIME, seconds.

If a Turbine Trip signal is active, then CENTS does the following:

i. Set the turbine steam demand (Section 6.6.1.1) to zero, regardless of the status of the user flag CTL_TURB_CONTROL_LOAD.

ii. Shift control of the Turbine Admission Valve signal and position, from the controllers that drive the TAV in normal operation, to separate controllers that drive the TAV after Turbine Trip.

iii. As determined by the above controllers, drive the TAV signal and position to zero, regardless of the status of the user flag CTL_TURB_CONTROL_AUTO.

Table 6.12

Turbine Trip Conditions (Typical)

1. Core trip

   CTL_CORE_TRIP = T (True)

2. Feedwater trip

   CTL_FWS_TRIP = T (True)

3. No load on turbine (anti-motoring trip)

   CTL_TURB_DEMAND < K

   where K is a constant.

4. High steam generator water level in any one generator

   CTL_SG_ILEVEL(J,1) > fraction setpoint, J = any SG.

5. Time delay after reactor trip, seconds

   CTL_TURB_TRIP_DELAY.

Table 6.13

Turbine Admission Valve Control Logic

	Turbine Not Tripped (CTL_TURB_TRIP = F)		Turbine Tripped (CTL_TURB_TRIP = T)
	CTL_TURB_CONTROL_LOAD = F	CTL_TURB_CONTROL_LOAD = T	
CTL_TURB_CONTROL_AUTO=T (Automatic turbine control)	(1) Steam demand (CTL_TURB_DEMAND) is set by user.	(1) Steam demand (CTL_TURB_DEMAND) sets secondary heat load to match primary power generation (CODE).	(1) Steam demand is ignored (GCS). CTL_TURB_DEMAND is set to zero (CODE).
	(2) TAV signal from turbine admission controller based on demand per Table 6.15 (GCS).		
	(3) TAV position from a valve handler that represents the valve response characteristic (GCS).		(2) TAV signal = 0.0
CTL_TURB_CONTROL_AUTO=F (Manual turbine control)	(1) Steam demand (CTL_TURB_DEMAND) is ignored		
	(2) TAV signal is input manually		(3) TAV position closes linearly with time after trip.
	(3) TAV position from a valve handler that represents the valve response characteristic (GCS).		

The shaded region in the Table represents the state during normal transient analysis.

Table 6.14

Turbine Admission Valve Control Variables

DESCRIPTION	VARIABLE	UNIT
Time constant for normal operation	CTL_TURB_AOUT_TC	sec
Trip closure time for TAV	CTL_TURB_TRIP_VALVE_TIME	sec
Turbine steam demand	CTL_TURB_DEMAND	frac
Rated turbine steam flow	CTL_TURB_STEAM_RATED	lbm/sec
Actual turbine steam flow	MSLH_FLOW_TURB	lbm/sec
Number of TAVs	CTL_TAV_NUM (≤ 5)	
Path number on MSLH (Fig. 7.5)	CTL_TAV_PATH(J) (J = 1,..., CTL_TAV_NUM)	
Turbine demand mode	CTL_TURB_CONTROL_LOAD F = User inputs demand T = demand set by code	T or F
TAV control mode	CTL_TURB_CONTROL_AUTO F = User inputs valve signal T = controller calculates valve signal	T or F

Table 6.15

Turbine Admission Valve Control System (Typical, GCS)

Controllers are provided to determine the valve state

MSLH_VALVE_SIG(I) *	Signal to TAV
MSLH_VALVE_POS(I) *	Position of TAV

Automatic Control (With No Turbine Trip):

$$\text{MSLH_VALVE_SIG(I)}^{\S} = \text{MSLH_VALVE_POS(I)} * \frac{\text{CTL_TURB_DEMAND} * \text{CTL_TURB_STEAM_RATED}}{\text{MSLH_FLOW_TURB}}$$

where MSLH_FLOW_TURB = Actual TAV flowrate, lbm/sec

$0.0 \leq \text{MSLH_VALVE_SIG(I)}^{\S} \leq 1.0$

MSLH_VALVE_POS(I) § lags the signal with time constant CTL_TURB_AOUT_TC.

Manual Control (With No Turbine Trip):

MSLH_VALVE_SIG(I) § = User specified signal to TAV

MSLH_VALVE_POS(I) § is set by the valve handler as for normal operation above.

Turbine Trip:

If the turbine is tripped, CTL_TURB_TRIP = T, then:

MSLH_VALVE_SIG(I) § = 0.0 (closed)

MSLH_VALVE_POS(I) § = MSLH_VALVE_POS(I) – CTL_TIME_STEP / CTL_TURB_TRIP_VALVE_TIME

where CTL_TIME_STEP = CENTS time step, seconds.

§ I = TAV path number on the steamline header, CTL_TAV_PATH(J), J = 1,...,CTL_TAV_NUM.

6.6.3 *Main Steam Isolation Valves (GCS)*

A main steam isolation signal (MSIS) is generated as defined by the modeler, e.g., Table 6.16. The setpoint variables are also given in Table 6.16. The MSIS closes the main steam isolation valves (MSIVs).

To disable automatic MSIS generation, use

CTL_MSIS_CONTROL_AUTO = T, auto MSIS,
= F, auto MSIS disabled.

The user may manually close the MSIVs by generating a MSIS,

CTL_MSIS_TRIP = T

or by direct control of the valves,

CTL_MSIS_CONTROL_AUTO = F
MSLH_MSIV_SIG(J) = 0.0, J=1, NUM_SG

where

NUM_SG is number of steam generators.

The user may manually open the MSIVs by:

CTL_MSIS_CONTROL_AUTO = F,
CTL_MSIS_TRIP = F, if MSIS was generated
MSLH_MSIV_SIG(J) = 1.0, J = 1,..., NUM_SG.

Table 6.16

Main Steam Isolation Valves

SETPOINTS

DESCRIPTION	SETPOINT VARIABLE	UNIT
Low SG pressure	CTL_MSIS_SG_PRES_TRIP	psia
High containment pressure	CTL_MSIS_CONT_PRES_TRIP	psia
Steamline flow	CTL_MSIS_SG_SLFLOW_TRIP(J) (J = 1,..., NUM_SG)	lbm/sec
Delay time for trip	CTL_MSIS_TRIP_DELAY	seconds

Main Steam Isolation Signal
(Typical 3 Loop Plant)

High steamline flow (2/3 loops I) coincident with either low steamline pressure (2/3 loops I) or low T_{avg} (2/3 loops I).

In this example, the setpoints and determination of these conditions are the same as for the SIAS trip described in Table 6.8.

6.6.4 Atmospheric Steam Dump (GCS)

The position of the atmospheric dump valves (ADV's) is controlled by the ADV controllers defined by the modeler. The setpoint variables and input for the controllers are listed in Table 6.17. The function of the controllers for a typical plant is described by Figure 6.5.

To manually control the ADVs after turbine trip, disable the automatic control,

CTL_ATM_DUMP_CONTROL_AUTO = F, Manual control
= T, Auto control

Manipulate the valve position (0.0 - 1.0) via the signal to the valve position controller

MSLH_VALVE_SIG(K)

where K is the ADV path number on the steamline (Figure 7.5):

K = CTL_ATM_DUMP_PATH(J), J = 1,..., CTL_ATM_DUMP_NUM.

The ADV paths are identified as shown in Table 6.17.

The flowrates through the ADV are determined (CODE) using the steamline pressure and enthalpy (Table 6.21) appropriate to the valve location on the steamline. Table 6.21 lists observable variables for the ADV.

Table 6.17

Atmospheric Dump Valves

SETPOINTS

DESCRIPTION	SETPOINT VARIABLE	UNIT+
Atmospheric dump setpoints	CTL_ATM_DUMP_SPOINT(I) (I = 1, 2)	
Path number on MSLH	CTL_ATM_DUMP_PATH(J) (J = 1,..., CTL_ATM_DUMP_NUM)	
Number	CTL_ATM_DUMP_NUM(≤ 10)	

Atmospheric Dump Valve Controller
(Typical Plant, See Figure 6.5)

Opening pressure	CTL_ATM_DUMP_SPOINT(1)	psia
Full open pressure	CTL_ATM_DUMP_SPOINT(2)	psia

+Units defined by usage in controller.

6.6.5 *Turbine Bypass (GCS)*

The turbine bypass valves (TBV) exhaust steam directly to the main condenser, bypassing the turbine. This system, together with the atmospheric steam dump system, is used to limit secondary steam pressure by rapidly removing reactor coolant system stored energy following a turbine/reactor trip. Like the atmospheric dump system, the turbine bypass system may operate automatically or manually.

The position of the turbine bypass valves (steam dump valves) is controlled by the bypass valve controllers defined by the modeler. Setpoint variables for the TBV controller(s) are given in Table 6.18. The overall function of the controllers and details of the controller logic for a typical plant are described in Table 6.19 and Figure 6.6 respectively.

To manually control the bypass valve after turbine trip, disable the automatic control,

CTL_TURB_BYPASS_CONTROL_AUTO = F, Manual control
= T, Auto control

and control the fractional valve openings directly (0. - 1.0):

MSLH_VALVE_SIG(K)

where K is the TBV path number on the steamline (Figure 7.5):

K = CTL_TURB_BYPASS_PATH(J)

The TAV path variable is listed in Table 6.18.

Critical flow for the turbine bypass is determined using the pressure and enthalpy (Table 6.21) appropriate to the valve location on the steamline (CODE).

Table 6.18

Turbine Bypass Valve Setpoints

SETPOINTS

DESCRIPTION	SETPOINT VARIABLE	UNIT+
Opening pressure	CTL_TURB_DUMP_OPEN	psia
Full open delta pressure	CTL_TURB_DUMP_DELP	psia
Quick-open rate	CTL_TURB_DUMP_QOPEN	$(sec)^{-1}$
Normal-open rate	CTL_TURB_DUMP_NOPEN	$(sec)^{-1}$
Quick-close rate	CTL_TURB_DUMP_QCLOSE	$(sec)^{-1}$
Normal-close rate	CTL_TURB_DUMP_NCLOSE	$(sec)^{-1}$
Operational mode	CTL_TURB_DUMP_MODE "Temperature Average" "Steam Pressure"	
Path numbers on MSLH	CTL_TURB_BYPASS_PATH(J) (J = 1,..., CTL_TURB_BYPASS_NUM)	
Number of TBV	CTL_TURB_BYPASS_NUM (≤ 5)	

+ Exact meaning of setpoints and units may be affected by controller usage. Typically, CTL_TURB_DUMP_MODE is a flag to allow use of alternate controllers depending on plant mode, e.g., "Temperature Average" or "Steam Pressure".

Table 6.19

Turbine Bypass Valve Control System

(Typical 3 Loop Plant)

Rate of Valve Movement:

Operating Conditions	Valve Movement Rate
Normal Open	CTL_TURB_DUMP_NOPEN
Normal Close	CTL_TURB_DUMP_NCLOSE
Quick Open	CTL_TURB_DUMP_QOPEN
Valves A-D, if signal (Figure 6.6A) ≥ 0.5	
Valves A-H, if signal (Figure 6.6A) ≥ 1.0	
Quick Close	
Low-Low T_{avg} (2/3 loops)	CTL_TURB_DUMP_QCLOSE

"Steam Pressure" Mode: CTL_TURB_DUMP_MODE=1.0

1. Valve signal from Figure 6.6B
2. Valve position changes linearly towards the signaled position at the rate selected by the rate controller.

"Temperature Average" Mode: CTL_TURB_DUMP_MODE=0.0

1. Valve signal
   a. Low-low T_{avg} (2/3 loops) - Signal = 0.0
   b. Normal Operation - Signal from Figure 6.6A
      CTL_TURB_TRIP = F, Load Rejection Controller
      = T, Turbine Trip Controller
2. Valve position changes linearly towards the signaled position at the rate selected by the rate controller.

6.6.6 Steam Generator Safety Valves (GCS)

Secondary side relief valve protection is provided by steam generator safety valves. Setpoint variables for the safety valves are listed in Table 6.20. The valve characteristic of a typical valve is described by Figure 6.7. Critical flow through the safety valves is determined using the pressure and enthalpy appropriate to the valve location. Observable variables are listed in Table 6.21.

6.6.7 Observable Variables

Table 6.21 summarizes the CENTS variables through which the behavior of the turbine control and steam regulating systems may be observed. Variables representing the various steam flowrates appear in Figure 6.8.

The specific enthalpy and the fission product concentrations of the various steam flowpaths identified in Figure 6.8 are observable via the corresponding properties associated with the appropriate upstream nodes (steam domes or main steamline header). The CENTS variables representing these nodal properties are listed in Table 7.16. For example, the turbine bypass flow enthalpy is MSLH_H (main steamline header enthalpy). Path numbers for the paths exiting from the MSLH are given in Figure 7.5 for typical plants.

An alternate means of observing the properties of steam flowpaths is via the array MSLH_OUTFLOW. This array is described in detail in Table 7.19.

6.6.8 Turbine Runback and Setback (GCS)

Provision is made to model turbine runback and setback control systems that are used to rapidly match secondary power to reactor power in the event that the reactor power cutback system (RPCS) described in Section 6.8.4 is actuated. The resulting signals

are linked to the turbine admission valves via the demand controller described in Section 6.6.3. Variables used to build, control and observe the state of these systems are provided as follows.

a. Turbine runback signal

CTL_TURB_RUNBACK_AUTO (logical)
= T, auto turbine runback system is operational.
= F, auto operation disabled

CTL_TURB_RUNBACK, signal to user for state of system (logical)
= T, turbine runback is engaged.
= F, not engaged; can't be set manually

CTL_TURB_RUNBACK_DELAY
= Delay time, seconds

b. Turbine setback signal

CTL_TURB_SETBACK_AUTO (logical)
= T, auto turbine setback system is operational.
= F, auto operation disabled; permits manual control

CTL_TURB_SETBACK_TRIP (logical)
= T, turbine setback is engaged (can be manually engaged).
= F, not engaged

CTL_TURB_SETBACK_TRIP_DELAY
= Delay time from trip to actuation, seconds

CTL_TURB_SETBACK_SETPOINTS(I), (I = 1,..., 10)
= Setpoint values used to build controllers (units depend on usage)

Table 6.20

Steam Generator Safety Valve Setpoints

DESCRIPTION	SETPOINT VARIABLE	UNIT+
Design open pressure	CTL_SGSV_PSET_OPEN(J)*	psia
Design open fraction	CTL_SGSV_ASET_OPEN(J)*	frac
Full closed pressure	CTL_SGSV_PSET_CLOSE(J)*	psia
Full open pressure	CTL_SGSV_PSET_FULL(J)*	psia
Number of loops	NUM_SG (≤ 4)	

Path number on MSLH (Figure 7.5 shows typical plants)

* J = 1,..., maximum of 24.

\+ Units depend on usage in controller.

Table 6.21

Observable Variables for Steamlines and Header

Variable	Definition
Steam flowrates	See Figure 6.8
CTL_TURB_TRIP	Turbine trip signal: T, trip; F no trip
CTL_MSIS_TRIP	Main steam isolation signal: T, signal; F, no signal
MSLH_PSL(JJ)	Steamline pressure, psia
MSLH_TSL(JJ)	Steamline temperature, °F
MSLH_HSL(JJ)	Steamline enthalpy, Btu/lbm
MSLH_P	Main steamline header pressure, psia
MSLH_H	Main steamline header enthalpy, Btu/lbm
MSLH_FLOW_COND	Total flow to condenser, lbm/sec
MSLH_FLOW_ATM	Total MSLH flow to atmosphere, lbm/sec
MSLH_FLOW_TURB	Total MSLH flow to turbine, lbm/sec
MSLH_MSIV_POS(JJ)	Main steam isolation valve position, frac
FWS_ENTH(J)	Main feedwater enthalpy, Btu/lbm
AFWS_ENTH(J)	Auxiliary feedwater enthalpy, Btu/lbm
MSLH_VALVE_SIG(K)	Signal to MSLH valve for path K, frac
MSLH_VALVE_POS(K)	MSLH Valve position for path K, frac
SL_P_FLOW(K)	Flowrate for MSLH path K, lbm/hr

* J = 1,..., NUM_SG
JJ = 1,..., NUM_SG • NUM_SL

K = 1,..., MSLH_VALVE_NUM

NUM_SG = Number of steam generators (≤ 4)

NUM_SL = Number of steamlines per steam generator (≤ 2)

MSLH_VALVE_NUM = Number of steamline valves

6.7 Feedwater Systems

6.7.1 Main Feedwater Regulating System (GCS)

The main feedwater control system is designed to maintain steam generator level by controlling the amount of feedwater admitted to the steam generator. As explained in Section 5.5, the details of the feedwater line model depend on whether the feedwater pumps and piping are modeled explicitly in the CENTS database. The choice is indicated by the CENTS user/modeler via the variable NUM_FWS_PUMPS for the number of feedwater pumps, as shown below.

NUM_FWS_PUMPS	= 0,	Use the simplified model	(Section 5.5.10)
	> 0,	Use the detailed model	(Sections 5.5.1 - 5.5.9)

For the simplified model, the control system directly specifies the flowrate to each steam generator. For the more detailed model, the control system controls the feedwater pump speed and the flow control valves.

CENTS simulation of the feedwater control system supports operation in one of four modes:

a. Normal automatic control of steam generator level,
b. Feedwater rampdown following turbine trip,
c. Feedwater trip, and
d. Manual control of main feedwater.

The logical variable that determines automatic or manual feedwater control is

CTL_FWS_CONTROL_AUTO = T, Auto control
= F, Manual control.

When the detailed feedwater model (above) is active, separate auto/manual controls are available for the various components:

Flow control valve to downcomer of steam generator J:

CTL_FWS_VALVE_AUTO(J) = T, Auto control
= F, Manual control.

Flow control valve to economizer of steam generator J:

CTL_FWS_ECON_VALVE_AUTO(J) = T, Auto control
= F, Manual control.

Speed control of feed pump K:

CTL_FWS_ECON_VALVE_AUTO(K) = T, Auto control
= F, Manual control.

Master manual control for all flow control valves and feed pumps:

CTL_FWS_CONTROL_AUTO = T, Individual Auto/Manual control of components as above,
= F, All components under Manual control.

Normal Automatic Control A typical controller for normal automatic control, defined by the modeler, is depicted in Figure 6.10. Setpoint and other variables for the controller are listed in Table 6.22. An example steam generator level setpoint program is shown in Figure 6.9.

Feedwater Rampdown CENTS will perform a feedwater rampdown, if the feedwater system is under automatic control at the time the rampdown is initiated and if the system modeler specifies a rampdown procedure and initiating conditions. The setpoints for this option are given in Table 6.22. An example feedwater rampdown controller is depicted in Figure 6.11.

Feedwater Trip Under automatic feedwater control, trip of the main feedwater system is generated by the feedwater trip controller, an example of which is described in Table 6.23. In manual control, only user action (setting CTL_FWS_TRIP = T) can trip the system. Feedwater flowrate behavior after trip is controlled by the feedwater controller, for example, Figure 6.10 or Table 6.23. Normally, feedwater trip results in a complete shutdown of main feedwater flow.

Manual Control Under manual control, the calculation of feedwater control functions is bypassed. In the simplified model (above), feedwater flowrates remain constant, unless reset or manipulated by the user via FWS_FLOW. In the detailed model, pump speeds and flow control valve positions remain constant, unless reset or manipulated by the user as follows:

CTL_FWS_SIG(J)	Demand signal for flow control valve to downcomer of steam generator J.
CTL_FWS_ECON_SIG(J)	Demand signal for flow control valve to economizer of steam generator J.
CTL_FWS_SPEED_SIG(K)	Demand speed signal to feed pump K.
CTL_FWS_BYP_SIG(K)	Demand signal to bypass valve K.

See Table 6.22 and Figure 6.8 for other related variable names.

Observable Variables Observable variables for the main feedwater system are given in Table 6.21 and Figure 6.8. Table 7.27 lists additional observable variables associated with a feedwater line break.

6.7.2 Auxiliary Feedwater System (GCS)

Auxiliary feedwater flow has historically been controlled manually by the operator. For convenience, CENTS provides an option to use a controller to simulate automatic control or simulate operator actions. The determining variable is

CTL_AFWS_CONTROL_AUTO = T, Auto control
= F, Manual control.

In the manual mode, the user may control the flow directly through the auxiliary feedwater flow variables shown in Table 6.24. The automatic mode is controlled as defined by the modeler via the setpoint variables in Table 6.24. A typical auxiliary

feedwater controller is described in Table 6.25. Observable variables for the auxiliary feedwater system are given in Table 6.21 and Figure 6.8.

6.7.3 Feedwater Enthalpy (CODE)

The feedwater enthalpy is calculated by CENTS as described in Section 5.5.9 when the detailed feedwater system model is used. Information about the behavior of the detailed feedwater model is provided by the variables discussed in Section 7.3.4. The feedwater enthalpy is calculated using the model described below when the simplified feedwater system model is used. The model to be used is selected as follows:

NUM_FWS_PUMPS = 0, use simple model
NUM_FWS_PUMPS > 0, use detailed model

Simplified Main Feedwater Enthalpy Model Under full-power steady state conditions, the feedwater heaters increase the specific enthalpy of the main feedwater from H_1 at the condensate storage tank, to H_2 at the steam generator inlets. This is the enthalpy increase at full power when the feedwater flowrate matches the steam flowrate to the condenser. However, the enthalpy rise is a function of the turbine load. Furthermore, when the feedwater flowrate and steam flowrate are mismatched, the feedwater enthalpy will differ from the matched-flows steady state value. To account for these effects, as well as for the considerable thermal inertia of the feedwater reheating system, CENTS employs a simple model to determine the feedwater enthalpy.

The feedwater enthalpy that would result if current steam and feed rates persist for a long time is approximated by

$$H_\infty = H_1 + f_H(\text{load}) \cdot (H_2 - H_1) \cdot (W_s / W_F) \leq H_{F,max}$$

where

W_s = steam flowrate through the turbine admission valves,
W_F = feedwater flowrate,

$H_{F,max}$ = maximum allowable feedwater enthalpy for low-feed conditions.

load = normalized turbine load

= MSLH_FLOW_TURB / CTL_TURB_STEAM_RATED

f_H(load) = normalized enthalpy rise from input table (see Table 6.22)

= $(H - H_1) / (H_2 - H_1)$ when the flows are matched.

For safety analysis, the limiting enthalpies are usually set equal to each other ($H_2 = H_1$) which makes $H_\infty = H_1$.

The change in feedwater enthalpy during a time step is given by

$$\frac{H_{new} - H_{old}}{H_\infty - H_{old}} = 1 - \exp\left(-\frac{\Delta t}{T_{FW,h}}\right)$$

where

H_{old}, H_{new} = enthalpy at beginning and end of time step,

Δt = time step size (typically one second)

$T_{FW,h}$ = user-supplied time constant for feedwater enthalpy changes.

Input variables for the main feedwater enthalpy model are listed in Table 6.22, where

H_1, H_2	CTL_FWS_H(J), J = 1, 2
$H_{F,max}$	CTL_FWS_H_MAX
$T_{FW,h}$	CTL_FWS_H_TC
f_H(load)	FWS_HTABLE_LOAD(L) FWS_HTABLE_ENTH(L)

The resulting feedwater enthalpy at the steam generator inlet is stored in the variable FWS_ENTH(J) for steam generators J = 1,..., NUM_SG.

Auxiliary Feedwater. The specific enthalpy of the auxiliary feedwater for the steam generators, is given by the variable AFWS_ENTH(J), J = 1,..., NUM_SG, and remains constant unless changed by the user.

6.7.4 *Steam Generator Instrumentation Level Indication (CODE)*

Level instrumentation located on the steam generator determines the steam generator water level by means of differential pressure readings between the end taps of several external reference legs. The instrument is calibrated to process these readings into an indicated water level at the calibration conditions of the steam generator and reference legs. During a transient that departs from the calibration conditions, the instrument's indicated water level deviates from the actual level in the steam generator.

CENTS determines the instrument level indication {SGS_HTI(I,J), feet; CTL_SG_ILEVEL(I,J), fraction} as a function of the steam generator's transient distribution of liquid mass and the coolant specific volumes. Here I refers to the steam generator number (I = 1,..., NUM_SG) and J refers to the reference leg number in each steam generator (J = 1,3). The multiple reference legs are used for wide or narrow range as well as duplicate instruments. The calibration specific volumes are

SGS_VF_REF	Steam generator liquid specific volume
SGS_VG_REF	Steam generator vapor specific volume
SGS_VLEG_REF	Reference leg specific volume.

The actual reference leg specific volume depends on the reference leg temperature (SGS_TREFLG), which changes only if it differs from the containment temperature (CONT_SG_TEMP).

Table 6.22

Main Feedwater System Variables

DESCRIPTION	VARIABLE	UNIT+
SG load for level program	CTL_FWS_SG_LEVEL_LOAD(I)	(I=1,2)
Minimum programmed level	CTL_FWS_SG_LEVEL_LOW	frac
Maximum programmed level	CTL_FWS_SG_LEVEL_HIGH	frac
Maximum flowrate per SG	CTL_FWS_MAX_FLOW	lbm/sec
Multiplier on pump speed (= 0.0 to trip pump)	CTL_FWS_SPEED_MULT(J)	
Low temperature trip	CTL_FWS_TRIP_SP	°F
Main feedwater trip signal	CTL_FWS_TRIP	logical
Delay time for FWS trip	CTL_FWS_TRIP_DELAY	sec
Flow at end of ramp after trip	CTL_FWS_TURB_TRIP_FRAC	frac
Duration of ramp after trip	CTL_FWS_TURB_TRIP_DELAY	sec
Feedwater flow to downcomer	FWS_FLOW(J)	lbm/sec
Feedwater flow to economizer	FWS_ECON_FLOW(J)	lbm/sec
Feedwater flow, total	FWS_FLOW_TOT(J)	lbm/sec
Feedwater enthalpy	FWS_ENTH(J)	Btu/lbm
Signal to downcomer control valve	CTL_FWS_SIG(J)	frac
Position of " " "	CTL_FWS_POS(J)	frac
Feedwater isolation valve position	CTL_FWS_ISO_POS(J)	frac
Feedwater bypass valve demand sig.	CTL_FWS_BYP_SIG(J)	frac
Signal to economizer control valve	CTL_FWS_ECON_SIG(J)	frac
Position of " " "	CTL_FWS_ECON_POS(J)	frac
Speed signal to feed pump K	CTL_FWS_SPEED_SIG(K)	frac
Speed of feed pump K	CTL_FWS_SPEED_FRAC(K)	frac
Reference speed of feed pumps	CTL_FWS_SPEED_MAX	RPM
Number of steam generators	NUM_SG, (J = 1,..., NUM_SG)	

Table 6.22 (Continued)

DESCRIPTION	VARIABLE	UNIT+
Enthalpy at:		
Condensate storage tank	CTL_FWS_H(1)	Btu/lbm
Steam generators	CTL_FWS_H(2)	Btu/lbm
Maximum allowable enthalpy	CTL_FWS_H_MAX	Btu/lbm
Time constant for enthalpy	CTL_FWS_H_TC	sec
Table of normalized enthalpy	FWS_HTABLE_ENTH(L)++	frac
Table of normalized load	FWS_HTABLE_LOAD(L)++	frac
Number of entries in above table	FWS_HTABLE_NUM	

L = 1,..., FWS_HTABLE_NUM (≤ 20)

* At 100% power steady state conditions

\+ Units of setpoints depend on usage in controller.

++ When this table is used for manual input of feedwater enthalpy, the table and the initial conditions must be adjusted to account for non-linearities in the feedwater enthalpy as a function of load. Since the initialization model assumes a linear relationship, this problem is resolved with user input by setting CTL_FWS_H(1) = CTL_FWS_H(2) = desired enthalpy.

Table 6.23

Main Feedwater Trip (Typical)

Conditions for Trip

1. Safety injection initiated

   CTL_SIAS_TRIP = T

2. Core trip coincident with low T_{avg}

   a. Core trip

      CTL_CORE_TRIP = T

   b. Low T_{avg}

      $MAX(T_{avg,}$ all loops) < CTL_FWS_TRIP_SP

Consequences of Trip

Complete shutdown of main feedwater flow.

Table 6.24

Auxiliary Feedwater Setpoints

DESCRIPTION	SETPOINT VARIABLE	UNIT+
Minimum programmed level	CTL_AFWS_SG_LEVEL_LOW(J)	
Maximum programmed level	CTL_AFWS_SG_LEVEL_HIGH(J)	
Total AFWS flow capacity	CTL_AFWS_TOT_FLOW	lbm/sec
SG pressure difference for cutoff	CTL_AFWS_SGDP_HIGH	psid
Delay in actuating AFWS pumps	CTL_AFWS_DELAY	sec
Multiplier to change flow	CTL_AFWS_FLOW_MULT(J)	
Availability indicator for:		
Turbine-driven pumps	CTL_AFWS_TURB_PUMP	
Motor-driven pumps	CTL_AFWS_MOTOR_PUMP	
Auxiliary feedwater flowrate*	AFWS_FLOW(J)	lbm/sec
Auxiliary feedwater enthalpy	AFWS_ENTH(J)	Btu/lbm
Number of AFWS pumps	NUM_AFW_PUMPS (≤ 4)	counts
AFWS flow to each nozzle	AFWS_NOZ_FLOW(J)	Btu/lbm
AFWS pump speed demand signals	CTL_AFWS_SPEED_SIG(J)	frac
Number of steam generators	NUM_SG, (J = 1,..., NUM_SG)	

* Calculated by the controller in automatic mode. May be manipulated by the user in manual mode.

\+ Units of setpoints depend on usage in controllers.

Table 6.25

Auxiliary Feedwater Control System
(Typical 3 Loop Plant)

Condition for Turbine Pump Actuation:

Low steam generator level (2/3 loops I)

(Indicated SG level < CTL_CORE_LOW_SG_LEVEL_TRIP)

Condition for Motor Pump Actuation - Either of:

1. Low SG level (2/3 loops I) or main feedwater trip, in coincidence with no SIAS

   (Indicated SG level < CTL_CORE_LOW_SG_LEVEL_TRIP

   or CTL_FWS_TRIP = T, in coincidence with CTL_SIAS_TRIP = F)

2. Time after SIAS exceeds AFWS delay

   (CTL_SIAS_TRIP = T
   CTL_SIAS_TIME > CTL_AFWS_DELAY)

Table 6.25 (Continued)

Total AFWS Flowrate:

Pump Actuation State (if modeled in GCS)

Turbine	Motor	AFWS Flowrate
On	On	User Table 1
Off	On	" " 2
On	Off	" " 3
Off	Off	0.0

User Tables[1]:

Array	Definition
XTAB	Independent variable, back pressure[2], psia
YTAB	Dependent variable, AFWS flowrate, lbm/sec
NOTAB	Number of entries in each table
PTTAB	Location of first entry for each table

(1) The user tables are available to be used for tabular data in all controllers. The current dimensioning supports up to 100 tables, with a maximum 2000 entries for all the tables combined.

(2) The average steam generator pressure is taken as the backpressure for the auxiliary feedwater pumps.

Flow to Each Steam Generator:

The total AFWS flow is split evenly between the generators. The flow may be redistributed or changed by varying the multiplier CTL_AFWS_FLOW_MULT(I), I = 1,..., NUM_SG.

6.8 Control Rod Regulating System

CENTS provides several options for managing reactivity in the reactor core. Provision is made for maintaining criticality during normal operation, meeting a desired power demand, reactor trip, and manual operation. The control rod motion and controller options are presented here, while details of the reactivity inputs and the option for user specification of power are discussed in Chapter 7. The control rod regulating system options are summarized in Table 6.26.

6.8.1 Control Rod Speed (GCS)

Control Rod Regulating System When CTL_CEA_AUTO = T and CTL_CEA_PERFECT = F, the control rod speed is determined by the control rod controller provided by the CENTS system modeler. Figure 6.12 describes a typical control rod controller. Table 6.27 lists the setpoint and other input variables for the controller.

Manual To gain manual control of the control rod speed set

CTL_CEA_AUTO = F

and set the control rod speed with the variable

CTL_CEA_SPEED, Steps/Minute.

6.8.2 Control Rod Position (CODE)

Rod Stepper Logic CENTS models the behavior of a magnetic jack moving control rods with one or more stepping rates if

CTL_CEA_PERFECT = F and
CTL_CORE_TRIP = F.

For each time step, the code determines the number of steps to be moved and the direction based on the rod speed (CTL_CEA_SPEED), the time step length, and the

time since the last rod movement (CTL_CEA_LAST_TIME). A change in the rod position, CTL_CEA_POS, occurs only when it is consistent with the rod speed and the time since the rod last moved.

Perfect Controller (CODE) An alternative to using the control rod regulating system provided by the system modeler is provided when

CTL_CEA_AUTO = T and
CTL_CEA_PERFECT = T.

The perfect control rod controller model in CENTS computes all reactivity deviations from the initial conditions due to Doppler (fuel temperature), boric acid concentration and moderator temperature (or moderator density) changes. It then immediately moves the control rods the appropriate number of steps from the current position, within one whole step, to exactly compensate the reactivity deviation from criticality. No allowance for rod speed limits is provided. An error message is provided if the rod worth available relative to the current position is insufficient.

Position Initialization The initial position of control rods, CTL_CEA_POS, is set in the database. This initial setting depends on the plant's CEA management. For example, the control rods may be partially inserted at full power to provide some "bite". To ensure that the reactor is just critical, the CENTS initialization algorithms (Appendix D) calculate the reference control rod reactivity feedback POW_KIN_DKINSZ based on the initial rod position and the rod worth table (Section 7.1.1, Table 7.4).

Trip The rod position is set to zero when a core trip occurs:

CTL_CORE_TRIP = T.

The resulting reactivity insertion is determined by the scram rod table described in Section 7.1. This overrides all other control rod modes as shown in Table 6.26.

6.8.3 *Observable Variables*

The state of the control rod regulating system, or other control rod options, may be determined with the input variables described in the text and Table 6.27. Additional information is provided by the state variables in Table 6.28.

6.8.4 *Reactor Power Cutback (GCS)*

CENTS makes provision to model a reactor power cutback system (RPCS) which is used to

1. prevent a reactor trip following the loss of one or more main feedwater pumps or
2. prevent reactor trip or lifting of primary or secondary safety valves due to a turbine load rejection from any load to a smaller load, including turbine trip from full power.

These objectives are accomplished by rapidly reducing the core power by dropping a pre-selected set of control rods and reducing turbine power by partially closing the turbine admission valves by means of signals generated using the turbine setback and runback system described in Section 6.6.8. The variables used to define the reactivity table for the control rods inserted due to an RPCS signal are described in Table 7.4.

Variables used to build, control and observe the state of this system are provided as follows:

CTL_RPCS_CONTROL_AUTO (logical)
= T, auto RPCS control is operational
= F, auto operation disabled

CTL_RPCS_TRIP (logical)
= T, RPCS signal is engaged
= F, RPCS not engaged

CTL_RPCS_TRIP_DELAY

= RPCS delay time, seconds

CTL_RPCS_SETPOINTS(I), (I = 1,...,5)

= Setpoint values used to build controllers (units depend on usage)

CTL_RPCS_PTRIP (logical)

= RPCS signal at last time step

CTL_RPCS_TRIP_TIME

= Time elapsed since RPCS was engaged, seconds

Table 6.26

Control Rod Controller Options

CTL_CORE_TRIP			
T	F		
	CTL_CEA_AUTO		
	T		F
	CTL_CEA_PERFECT		
	T	F	
CTL_CEA_SPEED not applicable	CTL_CEA_SPEED	CTL_CEA_SPEED from controller defined by system modeler	CTL_CEA_SPEED is user input
CTL_CEA_POS = 0.0	CTL_CEA_POS From perfect controller to maintain criticality	CTL_CEA_POS from rod stepper model	CTL_CEA_POS from rod stepper model
Reactivity from* POW_KIN_QDK table	Reactivity from* POW_KIN_DKINS table	Reactivity from POW_KIN_DKINS table	Reactivity from POW_KIN_DKINS table

*Refer to Section 7.1 for reactivity tables

Table 6.27

Control Rod Regulating System Setpoints and Input

SETPOINTS

DESCRIPTION	SETPOINT VARIABLE	UNIT
No load reference temperature	CTL_CEA_TREF_NO	°F
Full load reference temperature	CTL_CEA_TREF_FULL	°F
Exponent for gain term	CTL_CEA_GAIN_EXP	
Gain, G_2	CTL_CEA_TURBLD_GAIN	*

INPUT

Length of one step**	CTL_CEA_STEP	in
Total travel length**	CEAS_DIST	ft
Rod position**	CTL_CEA_POS	steps
Rod speed	CTL_CEA_SPEED	Step/Min
Initial rod worth for position	POW_KIN_DKINSZ	
Insertion worth table	Section 7.1	

* Computed by CENTS controller, for example, Figure 6.12

** These must be consistent

Table 6.28

Observable Variables for Control Rod Regulating System

VARIABLE	DEFINITION
CTL_CEA_POS	Control rod position, Steps
CTL_CEA_SPEED	Control rod speed, Steps/min
CTL_CEA_LAST_TIME	Time since last rod motion, Sec
CTL_CEA_POSITION_FRAC	Position of Control Rods, Fraction
POW_KIN_DKROD	Reactivity change relative to initial rod position, $\delta k/k$

FIGURE 6.1
PRESSURIZER LEVEL SETPOINT PROGRAM

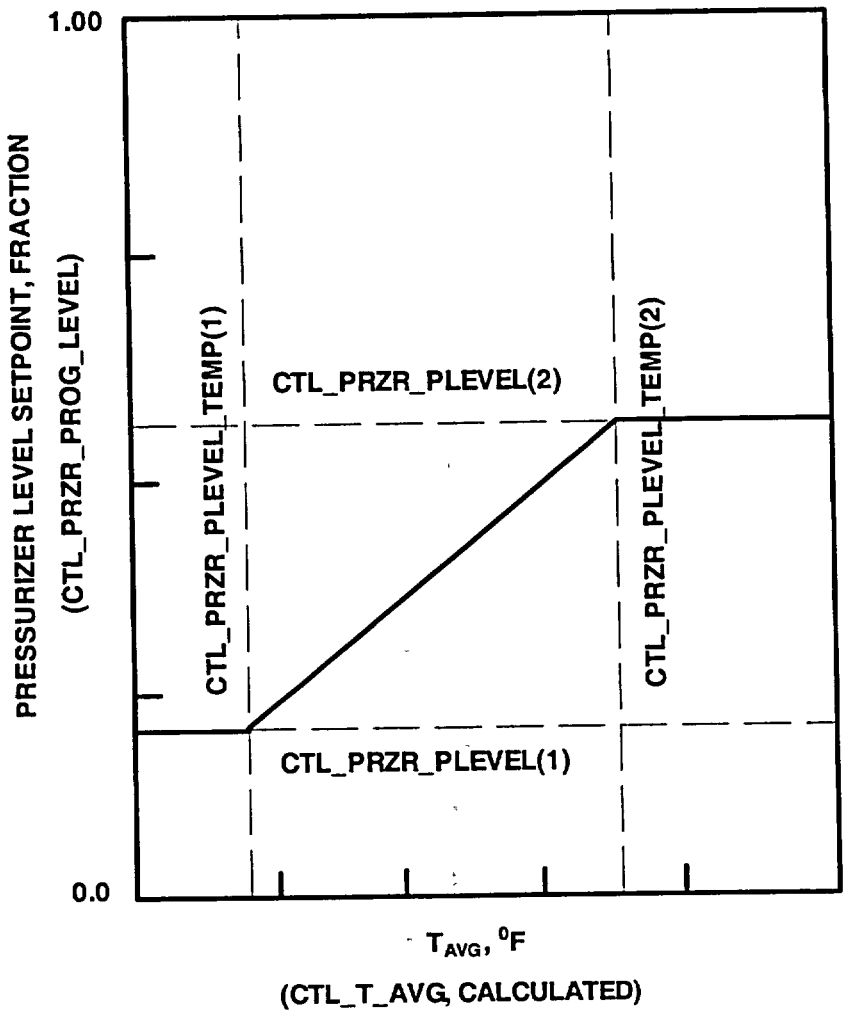

FIGURE 6.2

PRESSURIZER LEVEL CONTROL SYSTEM

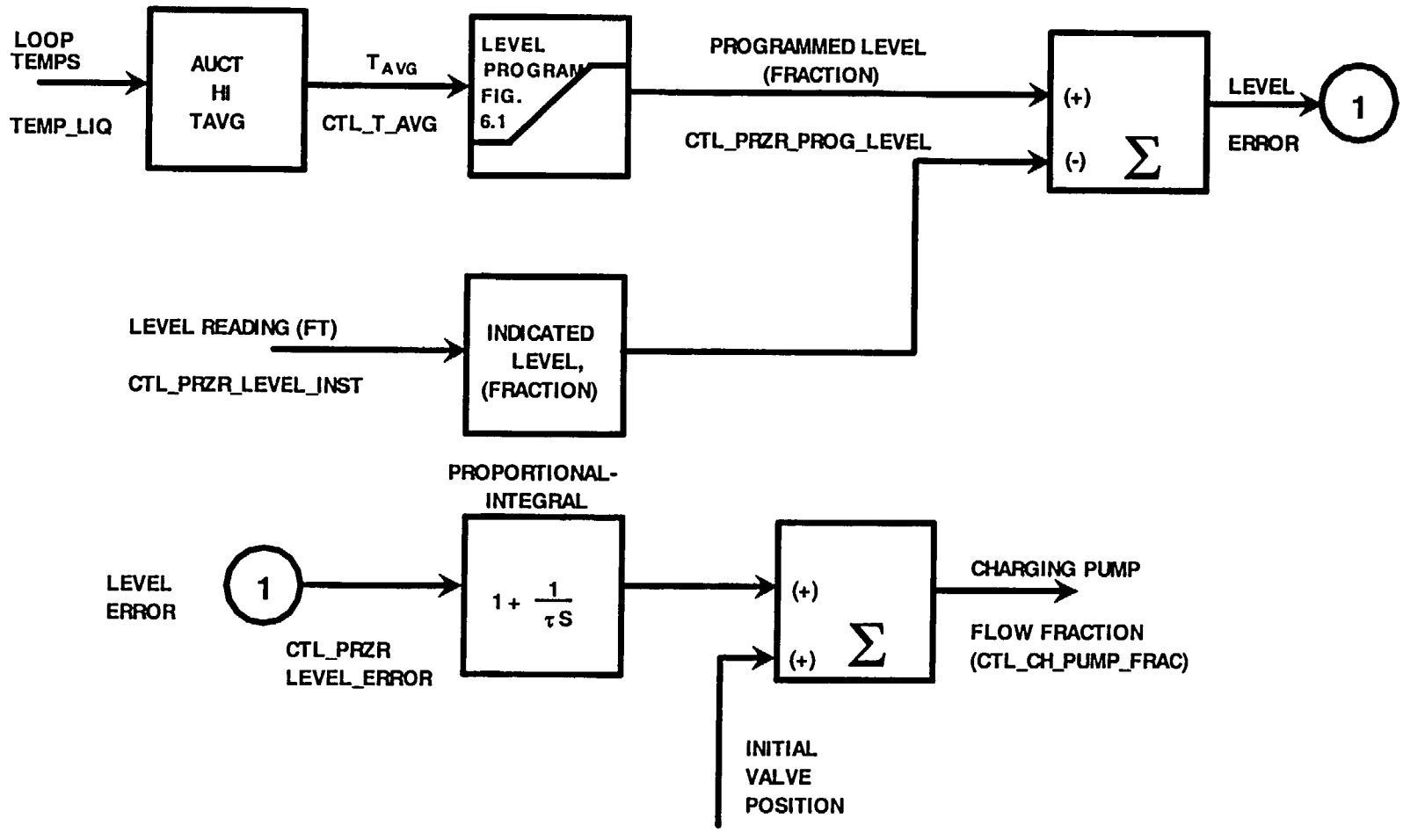

FIGURE 6.3
PRESSURIZER PRESSURE CONTROL PROGRAM

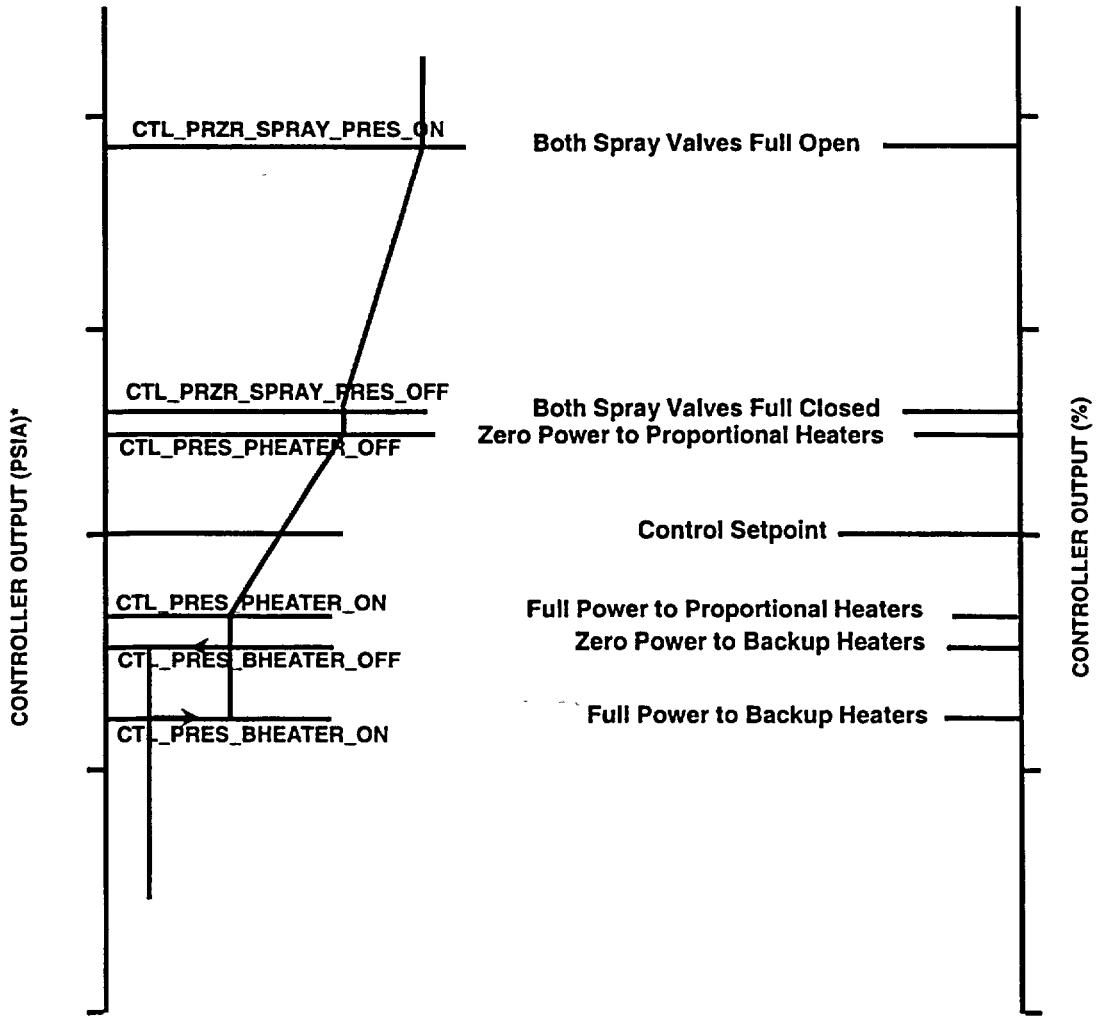

* PROCESSED PRESSURE SIGNAL FROM FIGURE 6.4

FIGURE 6.4

PRESSURIZER PRESSURE CONTROL SYSTEM

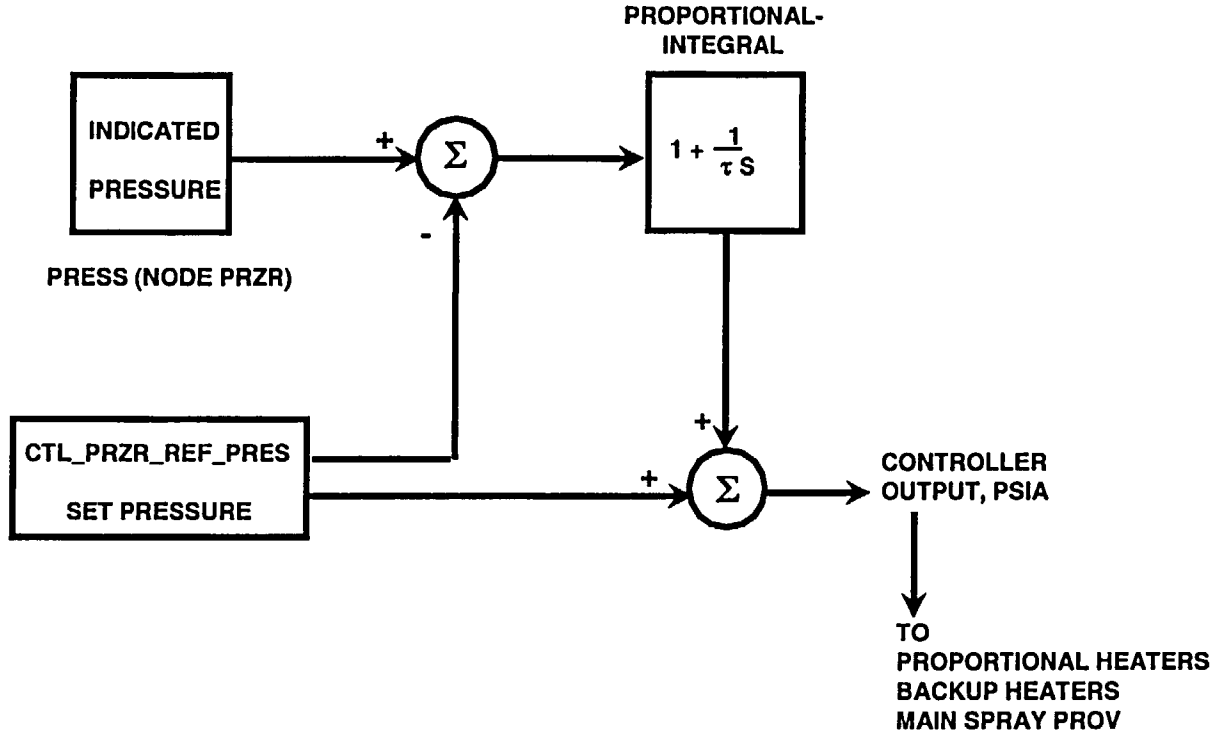

FIGURE 6.5

ATMOSPHERE DUMP VALVE CONTROL SYSTEM

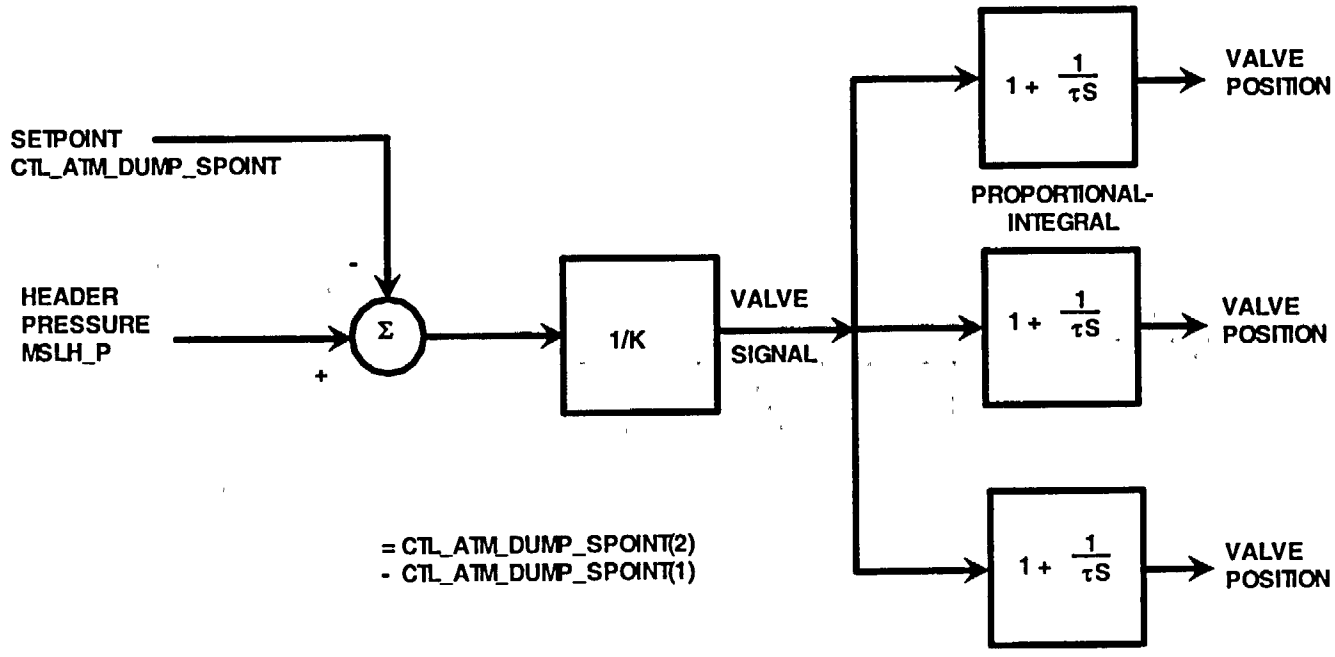

FIGURE 6.6A

TURBINE BYPASS CONTROL SYSTEM: "TEMPERATURE AVERAGE" MODE

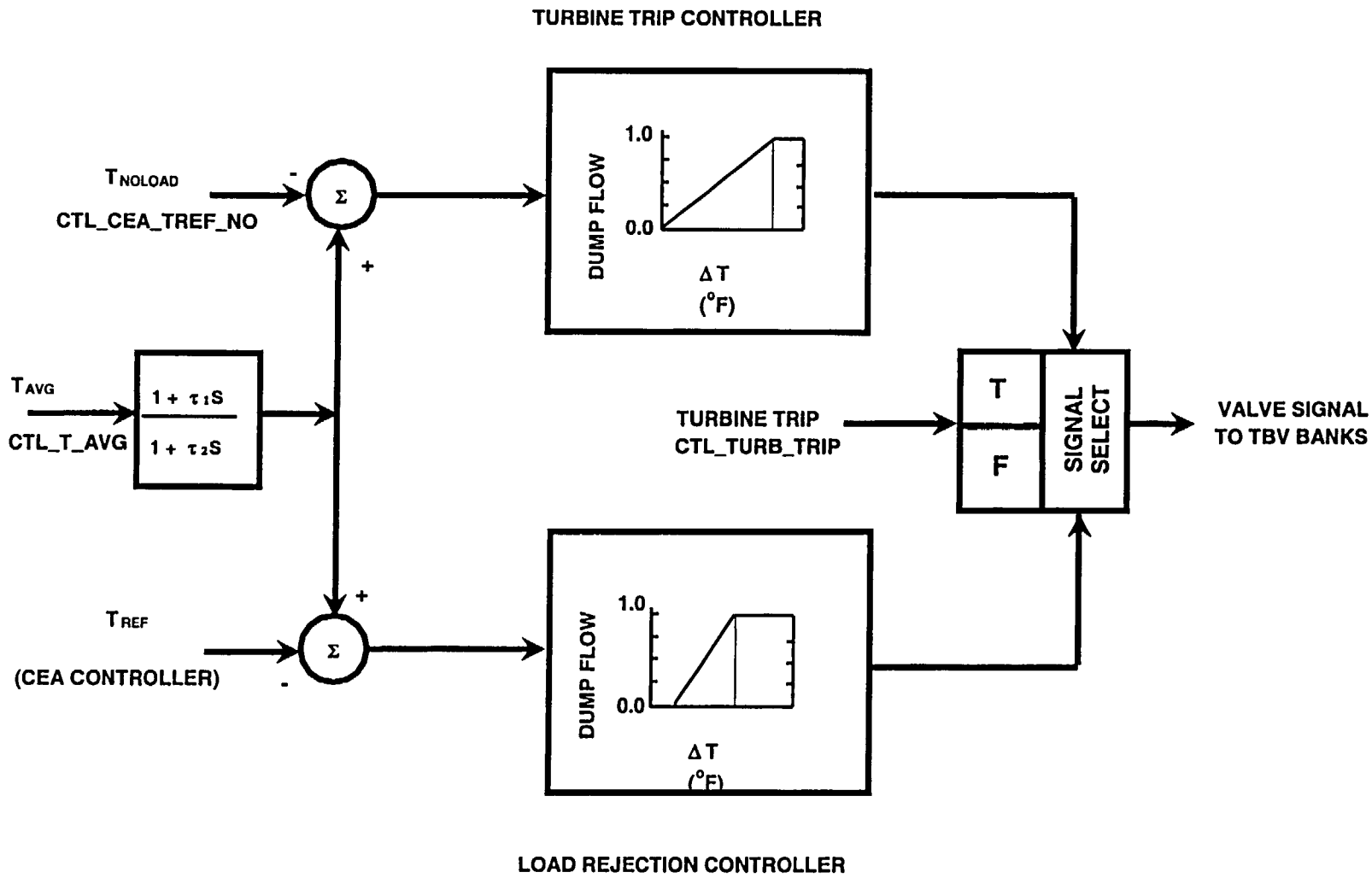

FIGURE 6.6B

TURBINE BYPASS CONTROL SYSTEM: "STEAM PRESSURE" MODE

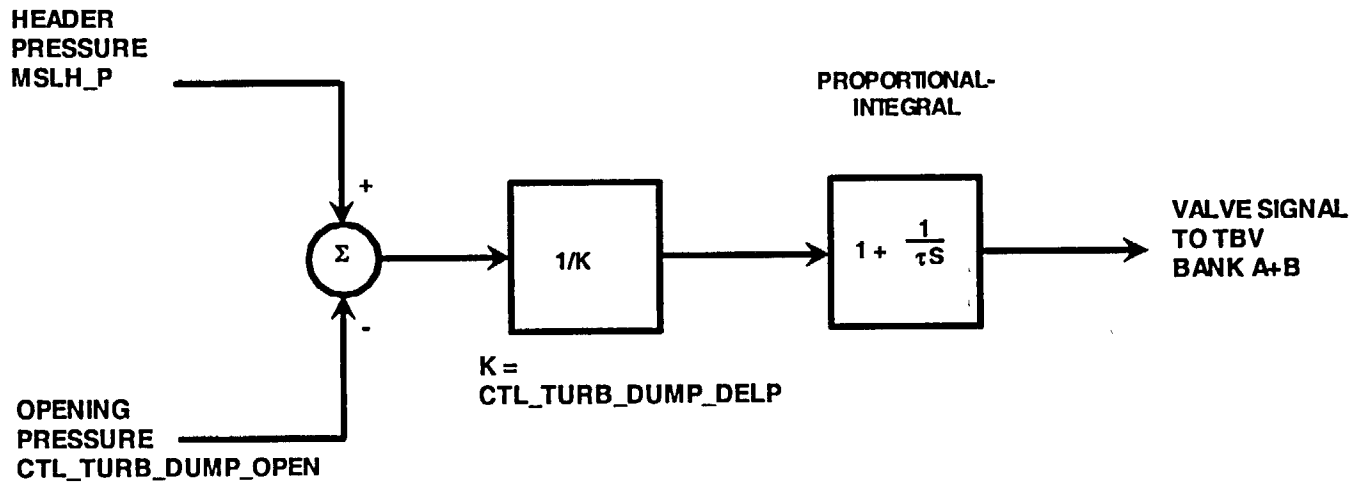

FIGURE 6.7
STEAM GENERATOR SAFETY VALVE CHARACTERISTICS

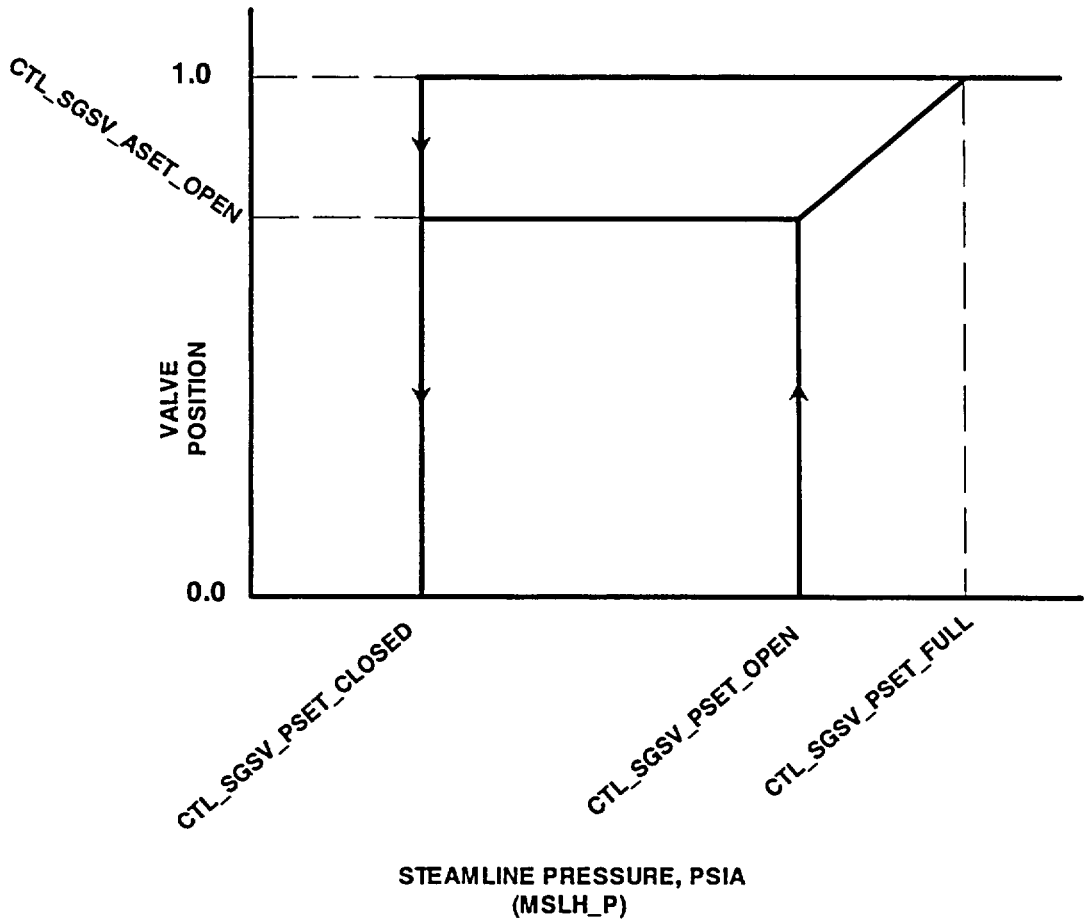

FIGURE 6.8

SECONDARY SYSTEM FLOWS

OUTSIDE THE STEAM GENERATORS

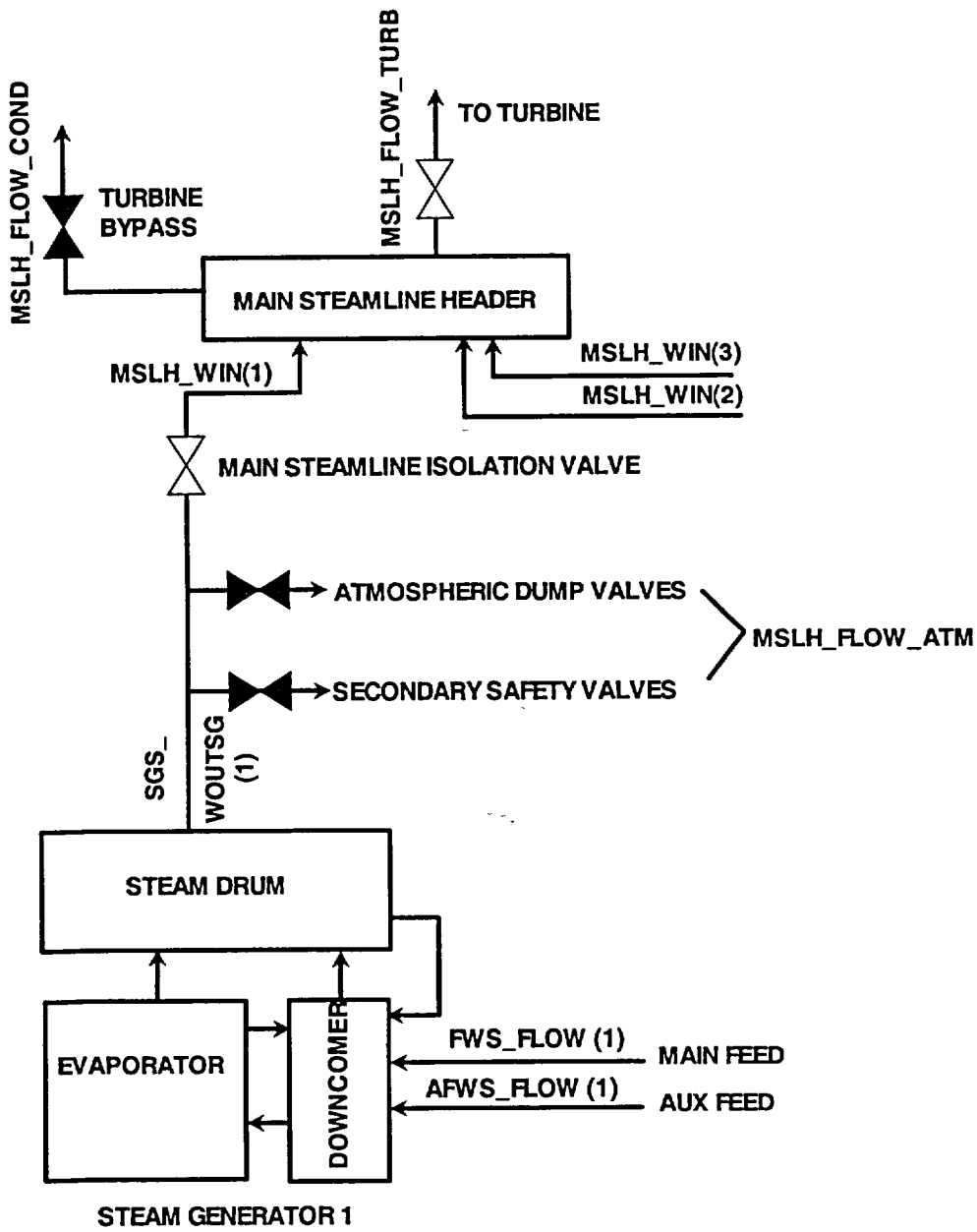

FIGURE 6.9
STEAM GENERATOR LEVEL SETPOINT PROGRAM

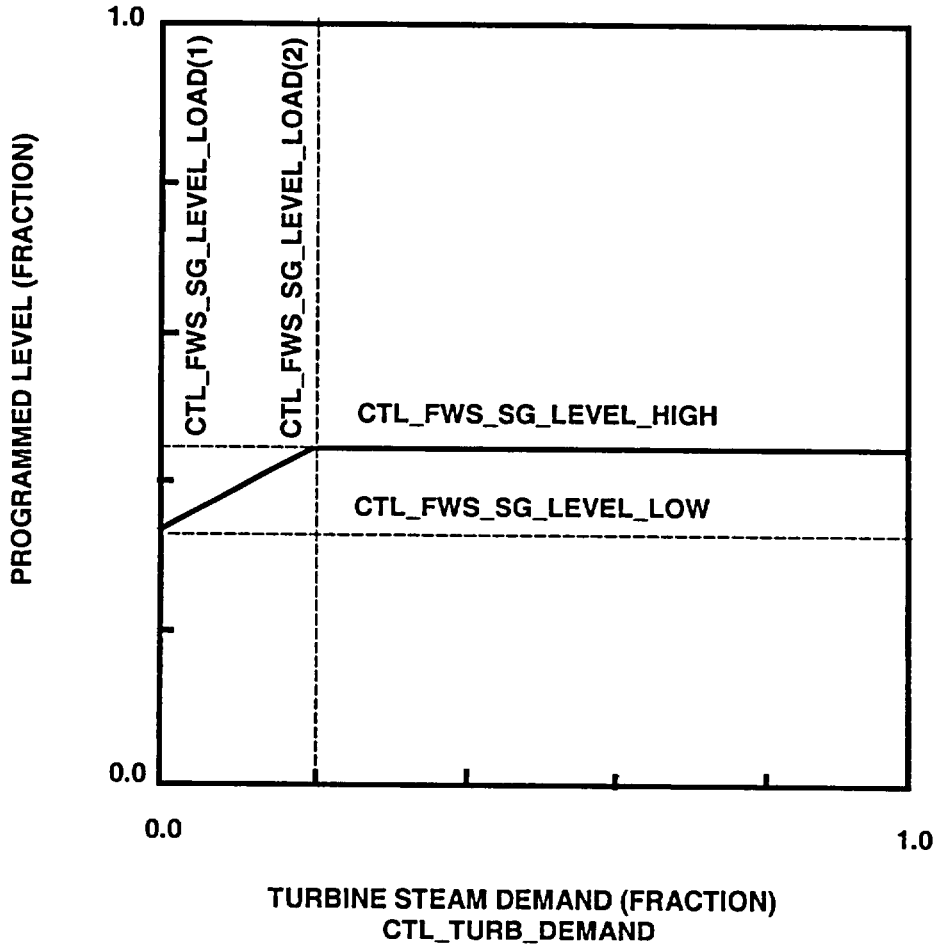

FIGURE 6.10

MAIN FEEDWATER CONTROL SYSTEM

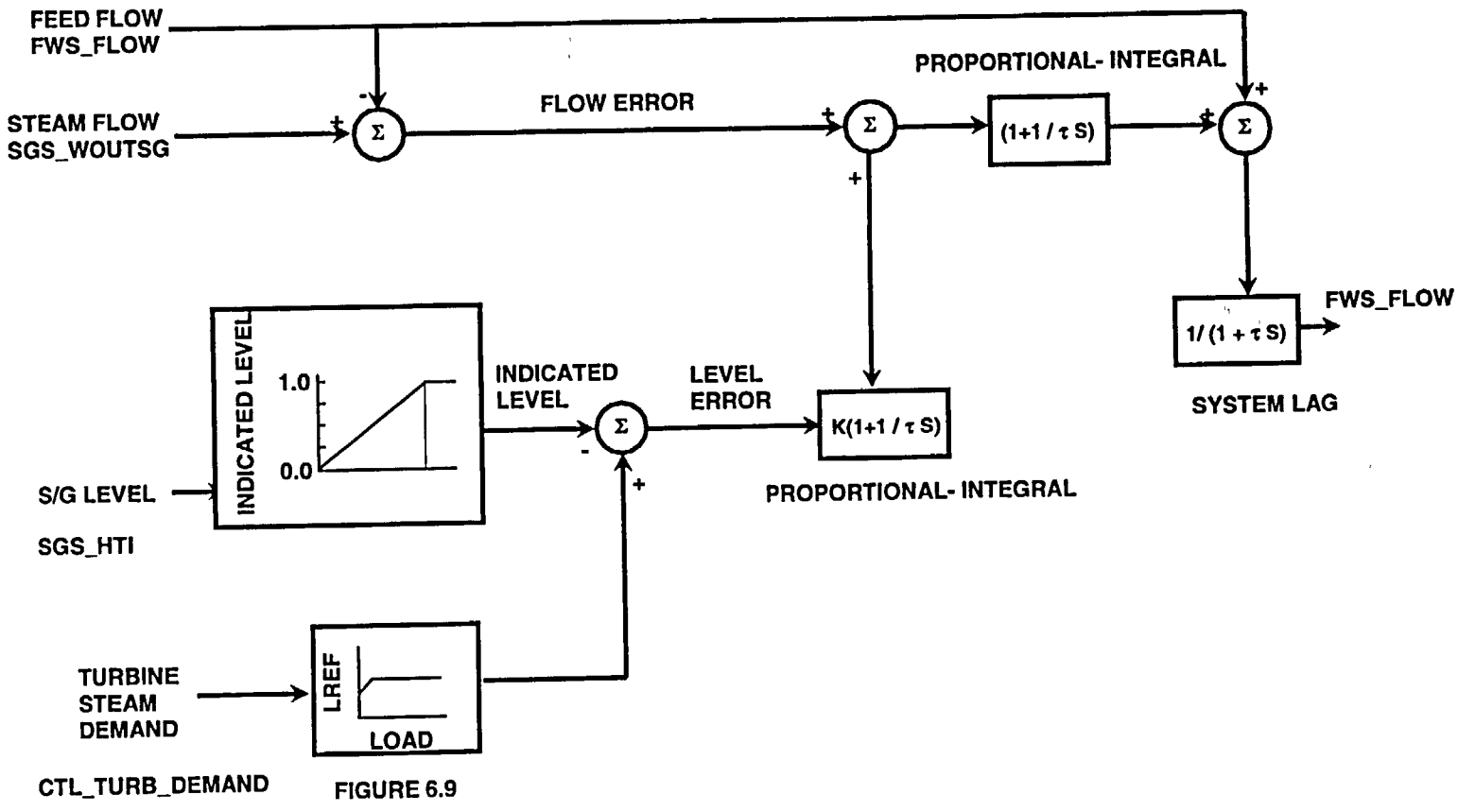

FIGURE 6.11

MAIN FEEDWATER RAMPDOWN CONTROL SYSTEM (TYPICAL)

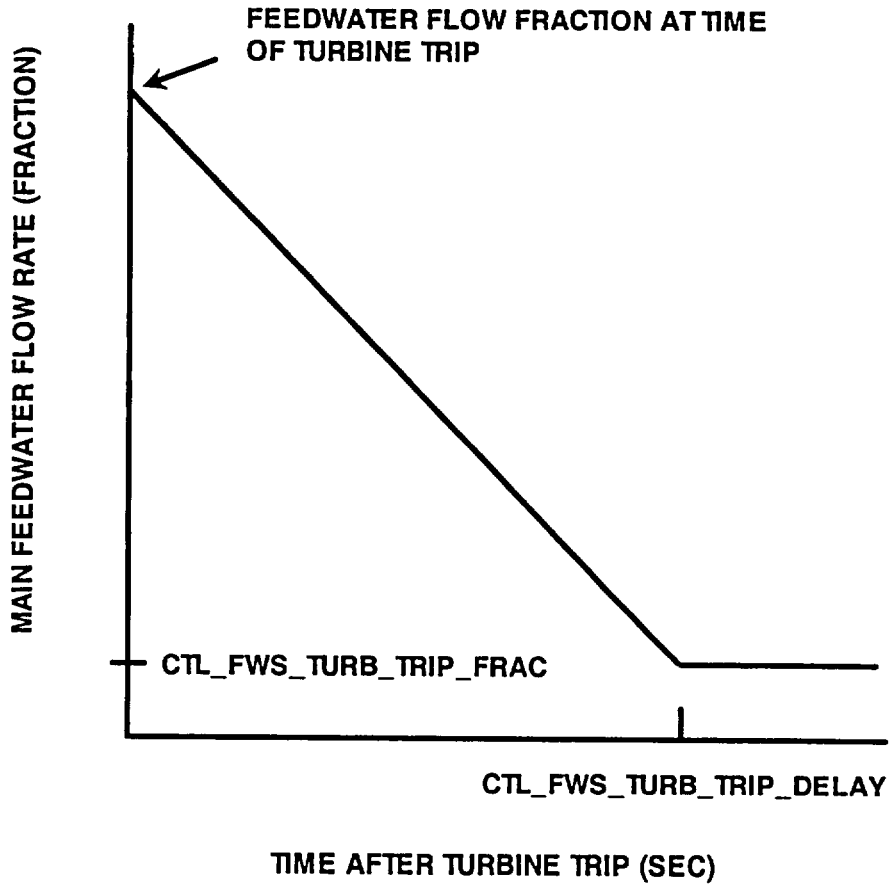

FIGURE 6.12A

CONTROL ROD REGULATING SYSTEM: Tavg AND Tref (TYPICAL, 3-LOOP)

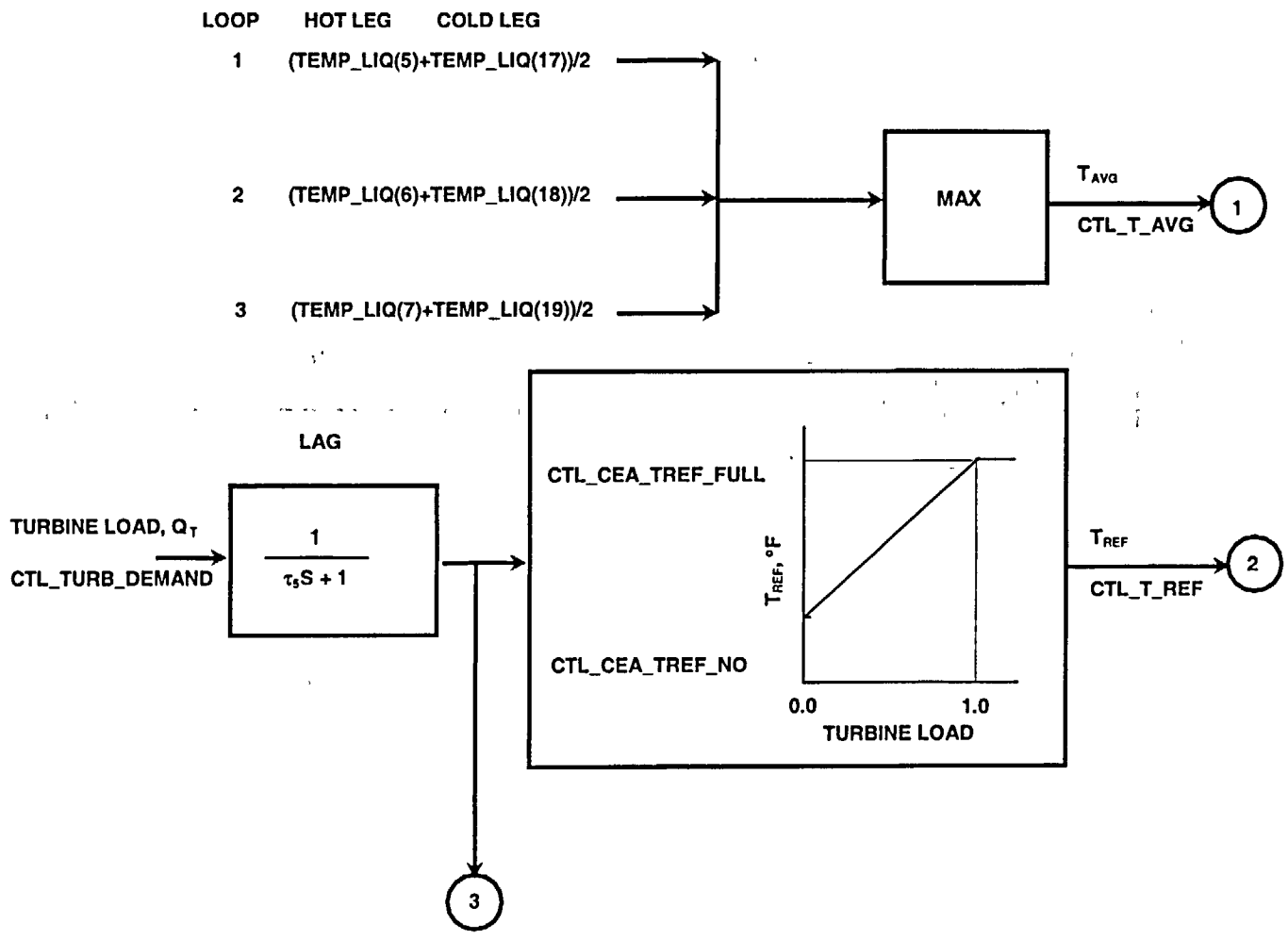

FIGURE 6.12B

CONTROL ROD REGULATING SYSTEM: ERROR SIGNAL (TYPICAL)

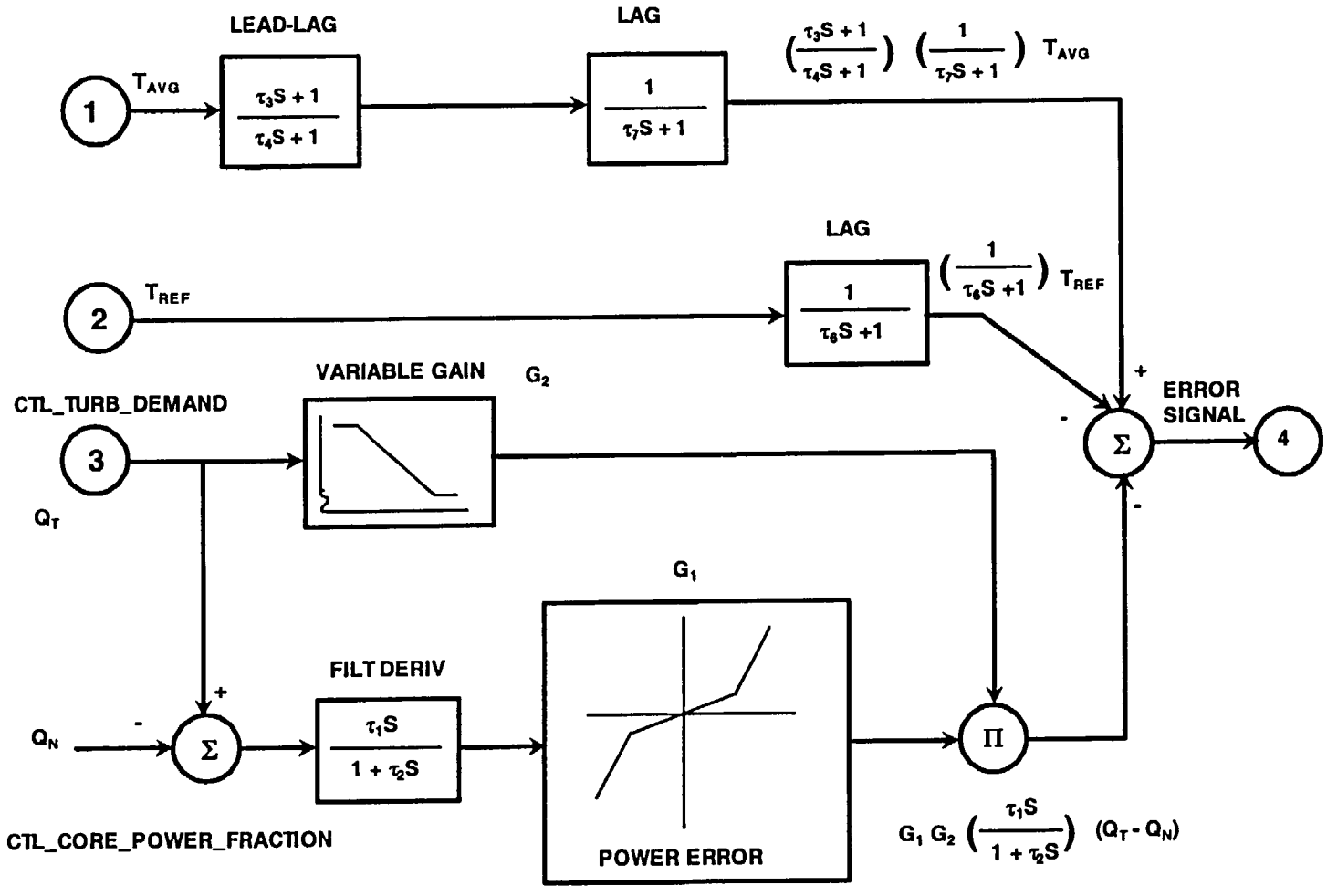

FIGURE 6.12C
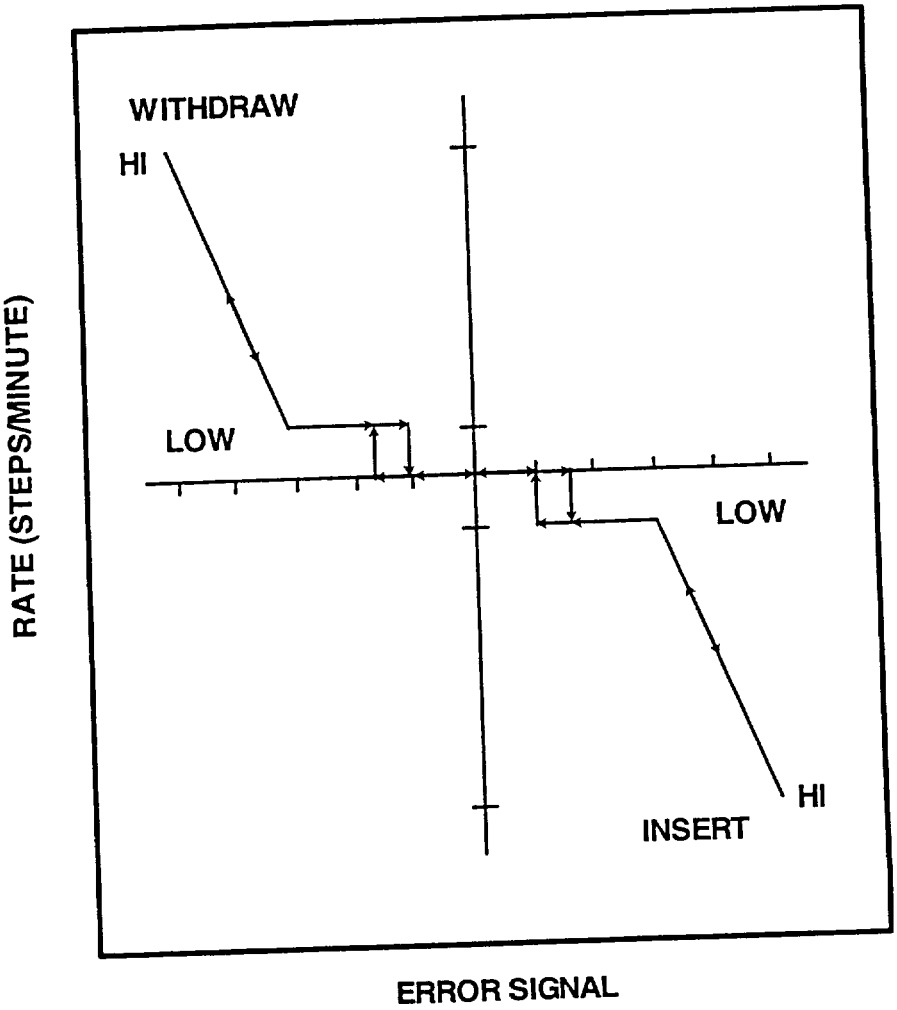
CONTROL ROD REGULATING SYSTEM: ROD SPEED (TYPICAL)