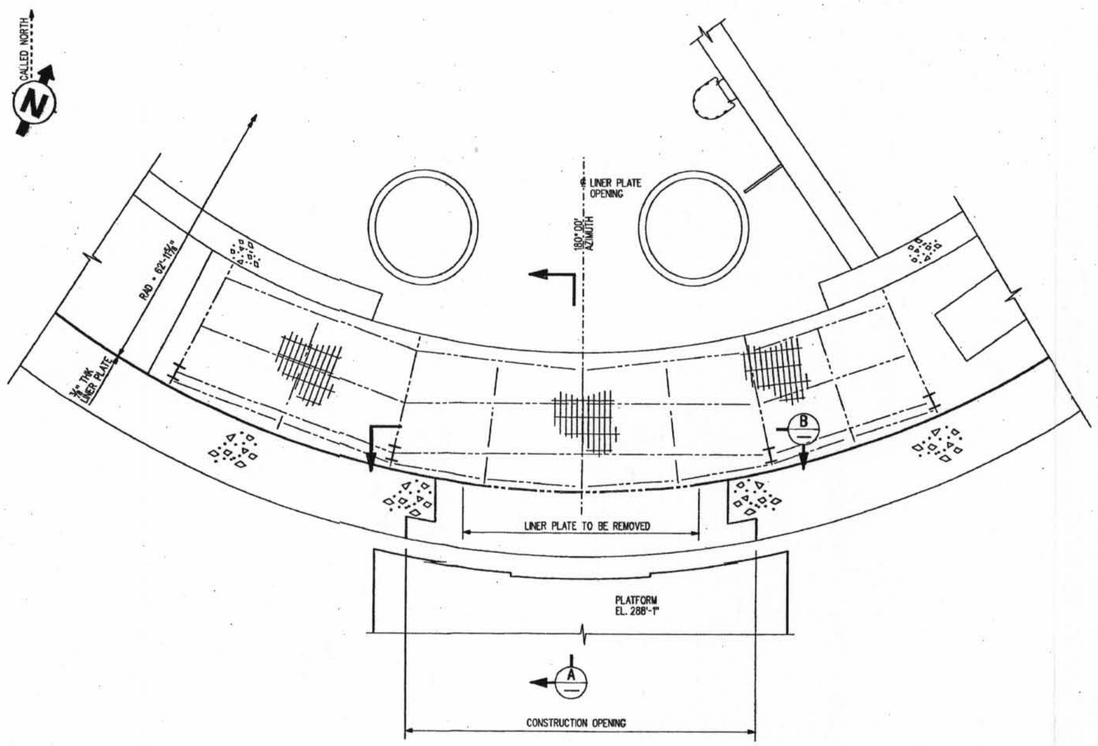

NOTE: (RD) RUNWAY FRAMING NOT SHOWN FOR CLARITY

PARTIAL PLAN @ EL. 291'-10"

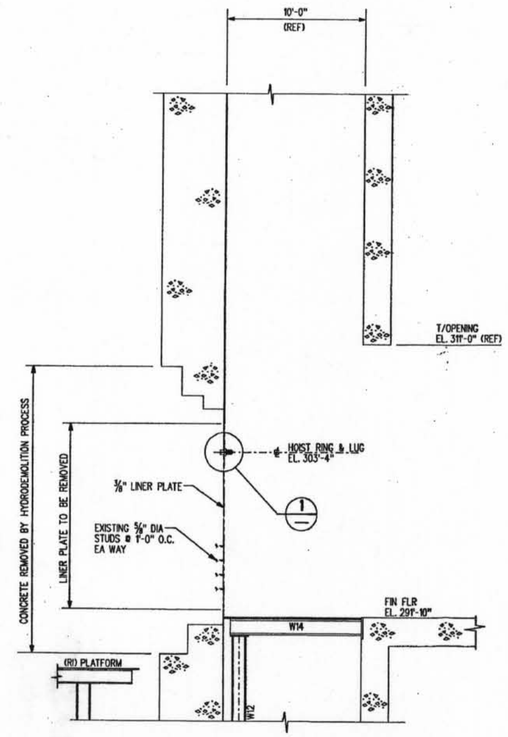

SECTION THRU CONSTRUCTION OPENING IN CONTAINMENT WALL

SECTION A

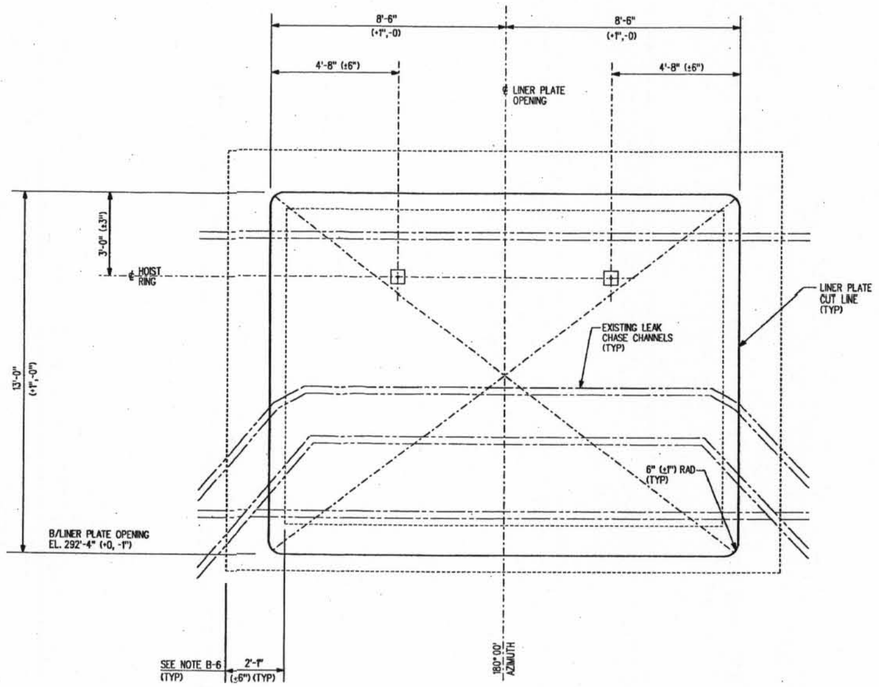

SIZE, LOCATION AND RIGGING ATTACHMENTS FOR LINER PLATE "DOOR SHEET"

SECTION B
½"=1'-0"

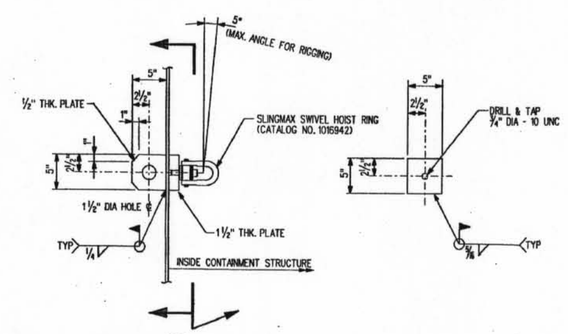

DETAIL 1
1½"=1'-0"

D-1

0 4 8 12 16
¼"=1'-0"

NOTES:

A. GENERAL

1. ALL WELDED ATTACHMENTS TO THE CONTAINMENT VESSEL SHALL BE SAFETY RELATED (SR) ASTM A36, PURCHASED IN ACCORDANCE WITH SPECIFICATION 24841-120-C-502. RIGGING COMPONENTS, INCLUDING THE WIRE ROPE, HOIST RING, TURNBUCKLES AND ASSOCIATED COMPONENTS ARE NON-SAFETY RELATED (NSR) AND SHALL BE PURCHASED AS STANDARD COMMERCIAL GRADE ITEMS FROM RIGGING HARDWARE SUPPLIERS.
2. ALL FIELD WELDS SHALL BE PERFORMED IN ACCORDANCE WITH THE SPECIAL PROCESSES MANUAL (SPM). NON-DESTRUCTIVE EXAMINATION (NDE) FOR ALL FIELD WELDS SHALL ALSO BE IN ACCORDANCE WITH THE SPM.
3. THE DIMENSIONS FOR THE LOCATION AND SIZE OF THE OPENING ARE PROJECTED DIMENSIONS ON A FLAT PLANE, U.N.O. THE ACTUAL DIMENSIONS MEASURED ON AN ARC ALONG THE SURFACE OF THE CONTAINMENT VESSEL WILL BE DIFFERENT.

B. CREATION OF CONSTRUCTION OPENING

1. INTERIOR SURFACE OF CONTAINMENT VESSEL SHALL BE DECONTAMINATED BY OTHERS PRIOR TO START OF WORK ON THIS DRAWING.
2. PAINT SHALL BE REMOVED FROM THE SURFACE OF THE CONTAINMENT VESSEL WITHIN A DISTANCE EXTENDING 6 INCHES TO BOTH SIDES OF THE CONSTRUCTION OPENING CUT LINE. PAINT SHALL BE REMOVED FROM BOTH THE INSIDE AND THE OUTSIDE SURFACES IN ACCORDANCE WITH APPLICABLE NORTH ANNA PLANT PROCEDURES.
3. WELD RIGGING PLATES TO CONTAINMENT VESSEL WALL PRIOR TO CUTTING LINER PLATE.
4. WEIGHT OF LINER PLATE TO BE REMOVED IS 1.7 TONS.
5. BECHTEL FIELD ENGINEERING TO PREPARE PLANS FOR RIGGING THE DOOR SHEET. THESE PLANS WILL BE REVIEWED AND APPROVED BY PROJECT ENGINEERING PRIOR TO CUTTING THE LINER PLATE.
6. THE EXISTING LEAK CHASE CHANNELS IN THE VICINITY OF THE LINER PLATE CUT LINE MAY BE REMOVED TO FACILITATE INSTALLATION OF TRACK CUTTING EQUIPMENT.

REFERENCE DRAWINGS:

24841-120-C-101	REACTOR PRESSURE VESSEL HEAD REPLACEMENT PROJECT - CONTAINMENT STRUCTURE CONSTRUCTION OPENING GENERAL ARRANGEMENT
24841-120-C-102	REACTOR PRESSURE VESSEL HEAD REPLACEMENT PROJECT - CONTAINMENT STRUCTURE CONSTRUCTION OPENING ELEVATIONS
24841-120-C-103	REACTOR PRESSURE VESSEL HEAD REPLACEMENT PROJECT - CONTAINMENT STRUCTURE CONSTRUCTION OPENING SECTIONS AND DETAILS

NORTH ANNA STATION DRAWINGS:

SEE DRAWING 24841-120-C-101 FOR NORTH ANNA STATION REFERENCE DRAWINGS.

VP VENDOR DRAWING STAMP
REF DCP, PO, ET, ETC. No: DCP 02-010
VP APPROVAL. DATE
VP DRAWING NO: N-02010-2-C-104 VP REV
SH 1 OF 1

DRAFT

NO.	DATE	REVISIONS	BY	CHK	DCS SUPV.	CHGR.	PROJ ENGR	APPR
1		ISSUED FOR REVIEW	MDB		-			-

SCALE 1/4"=1'-0" DATE 10/22/02 DESIGNED DRAWN MDB CHIEF ENGR.

BECHTEL POWER CORPORATION
FREDERICK, MARYLAND

NORTH ANNA POWER STATION - UNIT 2
DOMINION GENERATION

REACTOR PRESSURE VESSEL HEAD REPLACEMENT PROJECT - CONTAINMENT STRUCTURE CONSTRUCTION OPENING LINER PLATE DETAILS

JOB NO.	BECHTEL DRAWING NO.	REV.
24841	24841-120-C-104	A

REV. NO.	ELECT/CS	NUCLEAR	MECHANICAL	FACILITY DESIGN	CONST.
A	N/A	N/A	N/A	N/A	

COORDINATION SIGN-OFF

EXPIRATION DATE

34"X44" E SIZE

Bechtel Confidential © Bechtel Corporation 2002. Contains confidential and/or proprietary information to Bechtel and its affiliated companies which shall not be used, disclosed, or reproduced in any format by any non-Bechtel party without Bechtel prior written permission. All rights reserved.