Exelon Generation
Dresden Generating Station
6500 North Dresden Road
Morris, IL 60450-9765
Tel 815-942-2920

www.exeloncorp.com

Exelon Nuclear

10 CFR 50.73

December 2, 2002

RHLTR: #02-0093

U. S. Nuclear Regulatory Commission
ATTN: Document Control Desk
Washington, DC 20555-0001

Dresden Nuclear Power Station, Unit 2
Facility Operating License No. DPR-19
NRC Docket No. 50-237

Subject: Licensee Event Report 1989-029-05, "Elevated High Pressure Coolant Injection (HPCI) Discharge Piping Temperature Due to Reactor Feedwater System Back Leakage"

Enclosed is revised Licensee Event Report 1989-029-05, "Elevated HPCI Discharge Piping Temperature Due to Reactor Feedwater System Back Leakage," for the Dresden Nuclear Power Station (DNPS).

DNPS has recently completed piping analyses that were being performed to evaluate the operability of the High Pressure Coolant Injection (HPCI) system for an event which occurred on July 5, 2001. Based on our review of the 2001 HPCI event, it is concluded that the elevated discharge piping temperatures identified in LER 1989-029 rendered the HPCI system inoperable. Therefore the Safety Analysis and Corrective Actions sections were revised to reflect the conclusions of our piping analysis.

This event was reported in accordance with 10 CFR 50.73(a)(2)(v), Any event or condition that alone could have prevented the fulfillment of the safety function of structure or systems needed to mitigate the consequences of an accident.

If you have any questions, please contact Jeff Hansen, Regulatory Assurance Manager at (815) 416-2800.

Respectfully,

R. J. Hovey
Site Vice President
Dresden Nuclear Power Station

IE22

Enclosure

cc: Regional Administrator – NRC Region III
NRC Senior Resident Inspector – Dresden Nuclear Power Station

NRC FORM 366 (7-2001)	U.S. NUCLEAR REGULATORY COMMISSION	APPROVED BY OMB NO. 3150-0104 EXPIRES 7-31-2004
LICENSEE EVENT REPORT (LER)		Estimated burden per response to comply with this mandatory information collection request: 50 hours. Reported lessons learned are incorporated into the licensing process and fed back to industry. Send comments regarding burden estimate to the Records Management Branch (T-6 E6), U.S. Nuclear Regulatory Commission, Washington, DC 20555-0001, or by internet e-mail to bjs1@nrc.gov, and to the Desk Officer, Office of Information and Regulatory Affairs, NEOB-10202 (3150-0104), Office of Management and Budget, Washington, DC 20503. If a means used to impose information collection does not display a currently valid OMB control number, the NRC may not conduct or sponsor, and a person is not required to respond to, the information collection.

1. FACILITY NAME	2. DOCKET NUMBER	3. PAGE
Dresden Nuclear Power Station Unit 2	05000237	1 of 28

4. TITLE Elevated HPCI Discharge Piping Temperature Due to Reactor Feedwater System Back Leakage

5. EVENT DATE			6. LER NUMBER			7. REPORT DATE			8. OTHER FACILITIES INVOLVED	
MO	DAY	YEAR	YEAR	SEQUENTIAL NUMBER	REV NO	MO	DAY	YEAR	FACILITY NAME	DOCKET NUMBER
									Dresden 3	05000249
10	23	1989	1989	– 029 –	05	12	02	2002	FACILITY NAME N/A	DOCKET NUMBER N/A

9. OPERATING MODE	1
10. POWER LEVEL	100

11. THIS REPORT IS SUBMITTED PURSUANT TO THE REQUIREMENTS OF 10 CFR §: (Check all that apply)

	20.2201(b)		20.2203(a)(3)(ii)		50.73(a)(2)(ii)(B)		50.73(a)(2)(ix)(A)
	20.2201(d)		20.2203(a)(4)		50.73(a)(2)(iii)		50.73(a)(2)(x)
	20.2203(a)(1)		50.36(c)(1)(i)(A)		50.73(a)(2)(iv)(A)		73.71(a)(4)
	20.2203(a)(2)(I)		50.36(c)(1)(ii)(A)		50.73(a)(2)(v)(A)		73.71(a)(5)
	20.2203(a)(2)(ii)		50.36(c)(2)		50.73(a)(2)(v)(B)		OTHER Specify in Abstract below or in NRC Form 366A
	20.2203(a)(2)(iii)		50.46(a)(3)(ii)		50.73(a)(2)(v)(C)		
	20.2203(a)(2)(iv)		50.73(a)(2)(i)(A)	X	50.73(a)(2)(v)(D)		
	20.2203(a)(2)(v)		50.73(a)(2)(i)(B)		50.73(a)(2)(vii)		
	20.2203(a)(2)(vi)		50.73(a)(2)(i)(C)		50.73(a)(2)(viii)(A)		
	20.2203(a)(3)(I)		50.73(a)(2)(ii)(A)		50.73(a)(2)(viii)(B)		

12. LICENSEE CONTACT FOR THIS LER

NAME	TELEPHONE NUMBER (Include Area Code)
Riley Ruffin	(815) 416-2813

13. COMPLETE ONE LINE FOR EACH COMPONENT FAILURE DESCRIBED IN THIS REPORT

CAUSE	SYSTEM	COMPONENT	MANU-FACTURER	REPORTABLE TO EPIX	CAUSE	SYSTEM	COMPONENT	MANU-FACTURER	REPORTABLE TO EPIX
X	BJ	V	C665	Y	X	BJ	V	R340	Y
X	BJ	V	C665	Y	X	BJ	V	M360	Y

14. SUPPLEMENTAL REPORT EXPECTED			15. EXPECTED SUBMISSION DATE	MONTH	DAY	YEAR
	YES (If yes, complete EXPECTED SUBMISSION DATE)	X NO				

16. ABSTRACT (Limit to 1400 spaces, i.e., approximately 15 single-spaced typewritten lines)

On October 23, 1989, during normal Unit 2 operation at 100% power, an evaluation of the High Pressure Coolant Injection (HPCI) system discharge piping revealed discharge piping temperatures as high as 275 degrees Fahrenheit. The Unit 2 HPCI system was declared inoperable due to the possibility of a steam void existing within the discharge piping. A seven day Limiting Condition for Operation (LCO) was entered in accordance with Technical Specification 3.5.C. Subsequently, on October 31, 1989 at 1630 hours, during normal Unit 3 operation at 100% power, the Unit 3 HPCI system was also declared inoperable due to the-discharge piping temperatures being as high as 256 degrees Fahrenheit and the possibility of a steam void. The cause was determined to be Reactor Feedwater System back leakage into the HPCI discharge piping. On March 19, 1990, during normal Unit 2 operation at 96% power, pipe movement was experienced during performance of HPCI valve operability surveillance testing. Corrective actions included an engineering review and evaluation, and a revised standby valve lineup for HPCI to prevent the Reactor Feedwater system back leakage. A comprehensive HPCI piping inspection was also performed, various piping supports were repaired, and the piping support inspection program was reviewed. If the HPCI system would have initiated at the time the elevated temperatures existed, the piping stresses may have exceeded operability limits. While the HPCI system was considered inoperable, the safety significance of these events was minimal since the Automatic Depressurization, Isolation Condenser, Low Pressure Coolant Injection, and Core Spray systems remained available to provide reactor pressure/inventory control during postulated accident conditions.

A. Plant Conditions Prior to Event:

Unit: 02 (03) Event Date: 10/23/1989 Event Time: 2100
Reactor Mode: 1 (1) Mode Name: Run (Run) Power Level: 100 (100) percent
Reactor Coolant System Pressure: 1005 (1001) psig

B. Description of Event:

This event was reported in accordance with 10 CFR 50.73(a)(2)(v), Any event or condition that alone could have prevented the fulfillment of the safety function of structure or systems needed to mitigate the consequences of an accident.

1. Unit 2 October 23, 1989 Event Description

On May 11, 1989, the Technical Staff System Engineer conducted a walkdown of the Unit 2 HPCI [BJ] turbine steam supply drain pot piping to determine the root cause of increasing HPCI cubicle temperatures. During performance of the walkdown, the HPCI pump discharge piping was found to be at slightly elevated temperatures. Refer to Figure 1 for a HPCI system diagram. The temperature of the piping at the HPCI pump was measured at 140 degrees Fahrenheit (F), and the temperature of the piping between Motor Operated Valves (MOVs) 2-2301-8 and 2-2301-9 was measured at 160 degrees F.

Further investigations and walkdowns led to a test on July 19, 1989. Temperature readings were taken upstream and downstream of the HPCI Pump Discharge valve, MOV 2-2301-9, with the Unit 2 HPCI system in the normal standby lineup (i.e., MOV 2-2301-8 valve closed and MOV 2-2301-9 open, Figure 1). The temperature recorded on the Unit 2 HPCI pump discharge piping between the HPCI Main Pump and MOV 2-2301-9 was 175 degrees F. The temperature between MOV 2-2301-8 and MOV 2-2301-9 was 220 degrees F. At the same time, temperature readings were taken on the Unit 3 HPCI pump discharge piping. They were found to be significantly less than the readings obtained from Unit 2. To aid in determining the source of the heat input, MOV 2-2301-9 was closed to further isolate the Reactor Feedwater [SJ] system from the Unit 2 HPCI pump discharge piping. Approximately 12 hours later, the temperature recorded between MOVs 2-2301-8 and 9 had dropped to 106 degrees F. Subsequently, MOV 2-2301-9 was reopened, and the piping temperature began to steadily increase back to 220 degrees F. Based on this information, it was concluded that Reactor Feedwater back leakage was occurring.

In order to pinpoint possible back leakage flow paths, Unit 2 HPCI Booster Pump Discharge Check Valve to the Gland Seal Condenser Valve 2-2301-50A was backseated by starting the Auxiliary Cooling Water Pump. The 2-2301-50A valve is responsible for isolating the HPCI discharge piping from the Gland Seal Condenser cooling water piping while the Auxiliary Cooling Water Pump is operating. The HPCI pump discharge piping was then closely monitored for any pressure increases. The initial pressure was recorded as 32 psig. Following three hours of Auxiliary Cooling Pump operation, the pressure was recorded at 43 psig. This verified back leakage flow paths through the

HPCI Gland Seal Leakoff Condenser, Lube Oil Cooler and the Auxiliary Cooling Water Pump Discharge Check valve 2-2301-51 to the Condensate Storage Tank (CST) [KA] were occurring.

The HPCI discharge piping was then monitored on a regular basis through walkdowns by the Technical Staff. No significant further increases in Unit 2 HPCI discharge piping were observed until October 23, 1989, when a further detailed temperature survey of the HPCI discharge piping was performed. This survey revealed that the HPCI discharge piping temperature had increased to approximately 275 degrees F between MOVs 2-2301-8 and 2-2301-9, and to approximately 246 degrees F at the HPCI pump. A review of the piping configuration and steam table data indicated that steam voids could form in certain sections of the discharge piping under these conditions. The Unit 2 HPCI system was then declared inoperable. A seven day Limiting Condition for Operation (LCO) was entered in accordance with Technical Specification 3.5.C. A comprehensive Unit 2 HPCI piping inspection was conducted and piping support improvements completed. The HPCI piping supports were inspected by Visually Trained (VT) qualified personnel. The results of the inspections are summarized in Table 1.

On October 31, 1989 at 0800 hours, an Unusual Event condition was declared because repairs and testing were not yet completed and an orderly Unit 2 shutdown was initiated. The shutdown was subsequently terminated upon completion of Dresden Operating Surveillances (DOS) 2300-1, HPCI Motor Operated Valve Operability Verification, and DOS 2300-3, HPCI System Operability Verification, with the revised standby valve lineup shown in Figure 2.

2. Unit 3 October 31, 1989 Event Description

As a direct result of the HPCI pump discharge piping elevated temperature problems discovered on Unit 2, a Unit 3 HPCI pump discharge piping temperature investigation was initiated on October 29, 1989. Cursory investigation on the Unit 3 HPCI discharge piping located at the entrance to the Main Steam [SB] line tunnel indicated that elevated temperatures existed. Further investigations yielded that the piping in the U3 Main Steam line tunnel was insulated. The Unit 2 HPCI piping was initially believed to be de-insulated. A review of original construction documentation indicated that the Unit 2 and 3 HPCI piping contained in the Main Steam line tunnel was not insulated. Therefore, Architect Engineer involvement was requested to develop and recommend appropriate temperature measurement points in light of the insulation differences. Subsequently, the Architect Engineer provided points on the HPCI pump discharge piping to be monitored for temperature. Further inspections in the Unit 2 Main Steam line tunnel revealed that the Unit 2 HPCI piping in this area was, in fact, insulated.

On October 31, 1989, Technical Staff personnel, utilizing an infrared thermometer conducted a detailed walkdown of the Unit 3 HPCI pump discharge piping, measuring the piping surface at several locations. The recorded temperatures were as follows:

a. 255 - 256°F: Circumferentially around the HPCI pump discharge pipe, 3-2304-14", at elevation 513.5 feet at a vertical location prior to entering the main steam line tunnel, between MOVs 3-2301-8 and 9.

b. 163 and 133°F: On a horizontal run of the HPCI pump discharge piping one to two feet away from the first temperature location on top of the pipe, and on the bottom of the pipe, respectively.

c. 114°F: Downstream of the MOV 3-2301-9 valve.

d. 114°F: Upstream of the MOV 3-2301-9 valve.

e. 112°F: At the discharge of the Unit 3 HPCI Main pump.

Based on the above information, on October 31, 1989, at 1630 hours, during normal Unit 3 operation at 100% rated core thermal power, the Unit 3 HPCI system was declared inoperable due to the possibility of a steam void forming in the Unit 3 HPCI discharge piping. A seven day Unit 3 LCO was entered in accordance with Technical Specification 3.5.C, pending completion of a comprehensive Unit 3 HPCI piping inspection. A listing of identified piping support deficiencies is provided in Table 2. While monitoring HPCI pump discharge pipe temperature and pressure on November 3, 1989, it was noted that the temperature was increasing. The increase was attributed to leakage past MOV 3-2301-10. Valve manipulations performed included electrically stroking and manually seating MOV 3-2301-10, and closing MOVs 3-2301-15 and 49. It was observed that after MOVs 3-2301-15 and 49 were closed, pump discharge line pressure increased from approximately 650 psig to 1070 psig which confirmed the leakage past MOV 3-2301-10. The leakage path was stopped by revising the HPCI standby valve lineup on Unit 3 by closing MOVs 3-2301-15 and 49 and opening MOV 3-2301-48. Upon completion of operability testing with the HPCI system in the revised valve lineup (Figure 3), the Unit 3 HPCI system was declared operable at 1623 hours on November 7, 1989.

3. NRC Augmented Inspection Team (AIT) Review

On November 1, 1989, an NRC AIT was dispatched to investigate the elevated temperature problems on Dresden's HPCI pump discharge piping. The AIT investigation findings of the HPCI pump discharge piping elevated temperatures and associated structural support deficiencies were discussed during an exit meeting conducted on November 4, 1989. NRC Inspection Reports 50-237/89023 and 50-249/89022 documented these AIT Inspections.

4. Unit 2 March 19, 1990 Event Description

On March 19, 1990 at 0310 hours, after completing routine HPCI valve operability surveillance per procedure DOS 2300-1, and while performing DOS 1600-1, Quarterly Valve Timing, on the HPCI pump discharge valves, the Unit 2 Operations Shift Supervisor (SS) discovered banging noises emanating from the HPCI pump discharge

piping. Upon notification, the Shift Engineer (SE) accompanied the SS and observed the discharge piping moving approximately one inch. The SE immediately terminated the valve timing surveillance and returned the HPCI system to the post October event valve lineup as shown in Figure 2. The discharge piping banging noises and resulting piping movement were monitored by Operations personnel, and were observed to diminish and cease after approximately 1.5 hours.

Station Operating management were immediately notified of the event. Operating Shift personnel performed a preliminary visual inspection of the HPCI pump discharge piping and found no apparent damage. Based on the information obtained by the Operations Department personnel during the preliminary inspection, it was evident that a water hammer event did not occur, and HPCI system operability was unaffected.

C. Cause of Event:

This report is submitted in accordance with 10 CFR 50.73(a)(2)(v)(D), which requires the reporting of any event or condition alone that could have prevented the safety function of structures or systems that are needed to mitigate the consequences of an accident.

1. October 1989 Events

The root cause of the Reactor Feedwater system back leakage into the HPCI discharge piping on both Units 2 and 3 was attributed to leakage past HPCI pump discharge valve MOV 2(3)-2301-8 and HPCI pump discharge check valve 2(3)-2301-7. The HPCI systems are configured to inject into the reactor vessel via the "B" Feedwater line. Check valve 2(3)-2301-7 and MOV 2(3)-2301-8 are installed in series and are provided for isolating the Feedwater system from the HPCI system. Neither of these valves are primary containment isolation valves.

A review of Unit 2 MOV 2-2301-8 motor operator current trace characteristic obtained on October 26, 1989, indicated an abnormally high current, which alluded to a possible bent valve stem. During the dual unit outage conducted in December 1989, MOV 2-2301-8 was disassembled and inspected. The valve stem failed a straightness check and was replaced. Also, valve disc and seat erosion was identified, and thus, the leakage path was confirmed. Unit 2 check valve 2-2301-7 was last inspected during the previous Unit 2 refueling outage (D2R11) under the direction of WR 79577. The inspection had been performed on January 7, 1989 in accordance with Dresden Administrative Procedure (DAP) 11-25, General Check Valve Inspection Program. The 2-2301-7 check valve was found at that time to be in satisfactory condition. The valve was inspected, cleaned and the seating surfaces were blue checked. No discrepancies were identified.

During the D3R11 refuel outage, MOV 3-2301-8 was disassembled and inspected. The inspection identified steam cutting on the seating surfaces. Also, check valve 3-2301-7 was disassembled and inspected under WR 86037 during the refuel outage. This inspection identified valve disc and seat erosion. Therefore, Feedwater System back leakage on Unit 3 was also confirmed. Check valve 2(3)-2301-7 is designed to prevent

gross back leakage into the HPCI system, and is not relied upon to maintain zero leakage.

The root cause of the Unit 2 HPCI piping support deficiencies has been determined to be related to the Reactor Feedwater back leakage. Similarly, although to a lesser extent, the Unit 3 HPCI piping support deficiencies are related to the Reactor Feedwater back leakage phenomena. However, it is believed that normal system vibration loads contributed to some of these deficiencies and that these deficiencies may have existed prior to this event. A review of the piping support In-Service Inspection (ISI) program was then performed. The Dresden ISI program was written to meet the requirements of ASME Section XI, 1977 edition through the summer 1979 addenda. The sampling technique used for component supports involves selecting a number of supports prior to each refueling outage according to the minimums and maximums per period established by the code. The supports are selected by random sampling; ultimately, all supports are inspected at least once every ten years. If a component support inspected requires corrective action, additional component supports within that system are selected for inspection. If any of these additional supports require corrective action, then all the remaining similar supports on that system would be inspected. Review of the special inspections performed on the HPCI discharge piping supports indicates that deficiencies were noted in 47% (or 16) of the Unit 2 supports and 52% (or 21) of the Unit 3 supports. In order to determine the time frame in which this degradation occurred, an ISI history review was performed. It was found that of the 16 discrepant supports identified on Unit 2, five had been inspected in 1983 and one in 1988 with no abnormalities noted. Of the 21 discrepant supports identified on Unit 3, one had been inspected in 1983, one in 1985, and five in 1988 with no abnormalities noted. This data confirms that the HPCI discharge piping support deficiencies were not longstanding unidentified problems.

2. March 19, 1990 Event

The root cause of the Reactor Feedwater system back leakage into the Unit 2 HPCI pump discharge piping on March 19, 1990 was attributed to leakage past the HPCI Test Return Valve MOV 2-2301-10 during valve manipulations performed prior to the Quarterly Valve Timing surveillance, DOS 1600-1.

The HPCI system valve position lineup had been changed as a result of the October findings and is illustrated in Figure 2. The valve lineup consisted of opening MOV 2-2301-8 and closing MOV 2-2301-9. The HPCI pump discharge check valve 2-2301-7 and HPCI pump discharge valve MOV 2-2301-8 were known to be leaking.

On March 19, 1990 at 1000 hours, a walkdown of the HPCI pump discharge piping located in the torus area was conducted by the Technical Staff. During the walkdown, it was noted that the temperature of the piping at an elbow approximately three feet prior to entering the Main Steam tunnel was 203 degrees F. Temperatures were retaken at the following times: 160 degrees F at 1400 hours, and 102 degrees F at 0800 hours on March 20, 1990. These temperature measurements indicated the discharge piping had

experienced feedwater back leakage at some time prior to 1000 hours and that the back leakage had stopped.

On March 22, 1990 using a revised test sequence, procedure DOS 2300-1 was re-performed to confirm that a feedwater back leakage flow path was not created during the performance of the surveillance. Observations of the HPCI pump discharge piping confirmed, through temperature measurements, that significant back leakage had not occurred (approximately one degree F rise) during the testing. The HPCI system was left in the standby valve lineup illustrated in Figure 2.

Procedure DOS 2300-3, High Pressure Coolant Injection (HPCI) System Operability Verification, was performed approximately one hour after the completion of DOS 2300-1. At the commencement of the surveillance, the pump discharge line temperature was observed to be greater than noted at the completion of DOS 2300-1. During the performance of DOS 2300-3, feedwater back leakage was determined to be occurring by indications of increasing piping temperatures. The back leakage occurred during minimum pump flow operation and the transition period from minimum pump flow operation to the establishment of the required surveillance test flow. As the pump was brought up to required test conditions of flow and pressure, line temperatures were observed to decrease. At the completion of the test, the HPCI system was returned to the standby valve lineup shown in Figure 2. At no time during testing were banging noises heard or line movement observed.

HPCI discharge pipe temperature was further monitored after completion of DOS 2300-3 to determine if feedwater back leakage was occurring with the HPCI system in the standby valve lineup shown in Figure 2. Discharge piping temperature in the LPCI corner room was observed to be increasing. These temperature measurements indicated that feedwater back leakage was occurring through MOV 2-2301-10. Several attempts were made to eliminate the back leakage by reclosing MOV 2-2301-10; however, the feedwater back leakage continued. MOV 2-2301-15 was subsequently closed, and the back leakage was observed to cease. This verified that MOV 2-2301-10 was experiencing seat leakage. The HPCI pump discharge piping temperatures at several locations were monitored and eventually returned to normal.

Special tests were conducted under Special Procedure (SP) 90-3-69, High Pressure Coolant Injection Valve Manipulations for Data Acquisition, and SP 90-4-72, Unit 2 High Pressure Coolant injection (HPCI) System Test Return Valve 2-2301-10 Close Circuitry Testing. Results from the SPs were used for the root cause analysis of the March 19, 1990 event.

SP 90-3-69, conducted on March 27, 1990, was intended to perform a series of valve manipulations and to record HPCI pump discharge pipe temperature and pressure. Results from the test indicated that in standby (MOV 2-2301-8 open, MOVs 2-2301-9, 10 and 15 closed), the discharge pipe was pressurized. With MOV 2-2301-8 closed, conditions remained unchanged; however, as MOV 2-2301-15 was opened, line pressure decreased and temperature increased slightly. As MOV 2-2301-10 was opened,

pressure further decreased and temperature immediately increased. Operation of MOV 2-2301-10 was immediately stopped and the valve was closed. MOV 2-2301-15 was also closed at that time. The test indicated that with a direct back leakage flowpath established, HPCI pump discharge pipe temperature increases. SP 90-4-72, performed on April 12, 1990, obtained MOV current signatures during manual and automatic operation of MOV 2-2301-10. The data obtained was used to determine if MOV 2-2301-10 closure circuitry functioned correctly. At no time during the performance of either SP were there indications of pipe movement or banging noises.

The limit switches on MOV 2-2301-10 are set to provide a torque switch bypass function in the open direction until the valve is 25% open. This results in the valve showing full closed indication in the control room while 25% open. Thus, a closure signal is required to be maintained for approximately 30 seconds after receiving full closed indication to ensure the valve fully travels closed. This closure signal comes from either the control switch in the control room or the interlock associated with MOVs 2-2301-35 and 36 when fully open.

On March 19, 1990 while performing HPCI valve operability surveillance DOS 2300-1, the operator opened MOV 2-2301-10 and then opened MOV 2-2301-36 to demonstrate the interlock function. It is believed that the operator then began reclosing MOV 2-2301-36 prior to waiting the full 30 seconds after MOV 2-2301-10 shows closed indication. This action stopped closure of MOV 2-2301-10 and resulted in a Reactor Feedwater system back leakage flowpath.

In conclusion, SP 90-4-72 verified that MOV 2-2301-10 closure circuitry functioned properly, and that a feedwater back leakage flowpath could be established if the 30 second applied closure signal to MOV 2-2301-10 was removed.

Temporary procedure revisions and an operating order are in place to instruct the operator to allow for sufficient time for MOV 2-2301-10 to fully close prior to continuing in the surveillance. A modification is currently in progress to upgrade the limit switches from a two rotor to a four rotor design on several MOVs including the MOV 2(3)-2301-10 valve. This modification will result in these valves showing full closed or open indication only when the valve is in the full open or closed position. At the completion of this modification the temporary procedure revisions and operating order shall be withdrawn.

Consultation with the Mechanical Maintenance Department (MMD) revealed that no routine overhaul or preventive maintenance had been conducted on the 2(3)-2301-7 valve and the MOV 3-2301-8 valve prior to the feedwater back leakage events. The MOV 2-2301-8 valve was overhauled in the mid 1970's due to a bent stem and leakage problem. The MOV 2(3)-2301-10 valve on each unit had been overhauled prior to the feedwater back leakage events. These valves are both scheduled to be replaced with a different type valve during the upcoming refuel outages (D2R13 and D3R12), since these valves are subject to cavitation induced vibration during HPCI testing, which causes premature wear on these valves.

D. Safety Analysis:

If the HPCI system would have initiated at the time the elevated temperatures existed, the piping stresses may have exceeded operability limits. While the HPCI system was considered inoperable, the safety significance of these events was minimal because the Automatic Depressurization [SB], Isolation Condenser [BL], Low Pressure Coolant Injection (LPCI) [BO] and Core Spray [BM] systems were available to provide reactor pressure and inventory control under postulated accident conditions.

E. Corrective Actions:

October 1989 Events

1. The accessible Unit 2 HPCI discharge piping supports were visually inspected for gross damage on October 24, 1989 to determine whether the Reactor Feedwater back leakage had resulted in significant piping movement. The inspections were performed in the Unit 2 HPCI room, West Unit 2 LPCI pump room and the Unit 2 Pressure Suppression Chamber area. Of the 27 supports inspected, three pipe clamps were found rotated and/or shifted on the pipe. The rotation and slipping of clamps M-1151-146 and M-1151-147, located in the west LPCI pump room, is believed to have resulted from vibrations induced by the HPCI pumps. The third rotated clamp (M-1151-154) was located in the pressure suppression chamber area; however, this rotation was verified to have occurred prior to November, 1988 because a work request had been issued at that time to adjust the clamp configuration. An additional, more thorough inspection of the Unit 2 HPCI pump discharge piping and its associated supports was subsequently conducted by qualified inspection personnel. The walkdown was performed on October 28-30, 1989 and several supports were found with deficiencies. Work requests were initiated on the deficient supports and appropriate repairs were completed. See Table 1 for detailed descriptions of the identified deficiencies.

   The Unit 3 HPCI discharge piping supports were inspected on October 31, 1989, resulting in the identification of several supports with deficiencies. Work requests were initiated on the identified supports and repairs were completed on all deficient supports with the exception of two non-loaded supports which are slated for future removal entirely. See Table 2 for detailed descriptions of the Unit 3 HPCI piping support deficiencies.

2. As a temporary corrective action to prevent Reactor Feedwater system back leakage into the HPCI system due to the October event, the HPCI system standby lineup (Figure 1) was revised. This revision changed valve configurations MOV 2(3)-2301-9 (normally open) to a closed position, and MOV 2(3)-2301-8 (normally closed) to an open position (see Figure 2). This revised, off-normal valve lineup was reviewed in accordance with 10 CFR 50.59 Safety Evaluation Guidelines and documented by Dresden On Site Reviews 89-44 and 89-45 (237-200-89-15901).

3. Procedure changes were implemented to control the revised valve lineup (237-200-89-15902). Since the completion of the D3R11 and D2R12 Refuel Outages

during which repairs were made to valves 2(3)-2301-7 and MOV 2(3)-2301-8, both Units 2 and 3 HPCI Systems have been returned to the normal standby valve lineup as shown in Figure 1. Therefore, the temporary procedure revisions for both Units 2 and 3 have been terminated.

4. The following actions were performed to control the revised valve positions (237-200-89-15903). Since the completion of the D3R11 and D2R12 Refuel Outages during which repairs were made to valves 2(3)-2301-7 and MOV 2(3)-2301-8, both Unit 2 and 3 HPCI Systems have been returned to the normal standby valve lineup as shown in Figure 1. Therefore on both Units 2 and 3, the lens covers have been returned to normal, and the caution cards on the control switches have been removed.

   a. The lens covers on the 902(3)-3 panel for MOV 2(3)-2301-8, MOV 2(3)-2301-9, and MOVs 3-2301-15, 48 and 49 were changed to display the new valve positions, and to maintain the green board concept.

   b. A brief synopsis of the events surrounding the repositioning of MOV 2(3)-2301-8 and MOV 2(3)-2301-9 valves was conveyed to the operators via Operator Training. The training contained all the necessary information for the proper operation of the HPCI system with the revised valve lineups.

   c. MOV Control Switch Caution Cards (237-200-89-15904). Caution cards have been removed due to repair of valves MOV 2(3)-2301-8, MOV 2(3)-2301-10, and 2(3)-2301-7 during the D2R12 and D3R11 refuel outages.

      (1) A caution card was placed on MOV 2-2301-8 to contact the electricians to perform a valve signature prior to planned manipulation of this valve. This card has been removed due to replacement of the bent valve stem conducted during a unit outage in December 1989.

      (2) A caution card was placed on MOV 2(3)-2301-9 to instruct the operator to close the MOV 2(3)-2301-8 prior to opening the MOV 2(3)-2301-9, and to close the MOV 2(3)-2301-9 on a turbine trip if the MOV 2(3)-2301-8 does not close.

      (3) Caution cards were placed on MOVs 2(3)-2301-35 and 36 (suppression pool suction) so they did not remain open during normal unit operation. This ensured the HPCI pump discharge piping remained full.

      (4) A caution card was placed on the MOV 2(3)-2301-10 valve to instruct the operator to close the MOV 2(3)-2301-8 valve prior to opening MOV 2(3)-2301-10 valve. This ensured a flowpath from the reactor to the CST was not created.

5. Work requests were initiated to inspect and repair several valves as necessary. The valve numbers, work request numbers, and scheduled dates of inspection/repair are as follows (237-200-89-15905).

Valve	Work Request No.	Inspection/Repair Status
MOV 2-2301-8	86116	Inspection complete. Repaired during D2R12 Refuel Outage.
2-2301-7	86117	Repaired during D2R12 Refuel Outage
MOV 2-2301-10	92296	Repaired during D2R12 Refuel Outage
2-2301-7 Manual Bypass Valves		Inspection complete; no further action required
2-2301-51	82106	Inspection complete. Repaired during D2R12 Refuel Outage
MOV 3-2301-8	88807	Inspection and valve seat repairs complete.
3-2301-7	88810, 79198	Inspection and repairs complete
3-2301-7 Manual Bypass Valves		Inspection complete; no further action required
3-2301-51	83904	Inspection complete. Repair D3R12 (Fall, 1991).
MOV-3-2301-10	88197	Inspection and repairs complete

a. Present status of Unit 2 and Unit 3 HPCI valves.

(1) MOV 2-2301-8:

During the dual unit outage in December 1989, the HPCI pump discharge inboard isolation valve, MOV 2-2301-8, was disassembled for inspection as a result of the feedwater system back leakage problem. The results of the inspection yielded that the valve seat and the disc experienced signs of erosion. Due to the short length of that Unit 2 outage, it was determined that any identified valve repairs would be performed during the D2R12 refueling outage in September, 1990. WR 89227 was written to perform the necessary repairs on the valve disc and seat (237-200-89-15923). However, the bent valve stem was replaced. The valve was then reassembled, cycled, and successfully tested prior to unit startup. Additionally, as a result of the March 19, 1990 event, a MOV current signature was obtained. The signature indicated that MOV 2-2301-8 was functioning properly. The MOV 2-2301-8 valve disc and seat were subsequently repaired during the D2R12 refuel outage. The valve seat was lapped, the disc was refurbished, and MOV 2-2301-8 subsequently passed a blue check.

(2) 2-2301-7:

During the D2R12 refuel outage, valve 2-2301-7 was repaired. The valve seat was lapped, weld repair was conducted on the valve disc, and a blue check was successfully conducted.

(3) MOV 2-2301-10:

MOV 2-2301-10 was repaired during the D2R12 refuel outage. The pressure seal ring was replaced, the motor operator was disassembled and repaired, the valve disc was remachined, and the valve seat was lapped. A subsequent blue check was successfully conducted.

(4) 2-2301-7 Manual Bypass Valves:

The normally closed manual bypass valves for the 2-2301-7, check valve were inspected during the dual unit outage conducted in December 1989. A pressure decay test, patterned after a local leak rate test, was performed on the volume bounded by the four valves. See Figure 4 for manual bypass valve configuration. No observable leakage was noted.

(5) 2-2301-51:

On February 3, 1989 during the D2R11 Refuel Outage, the auxiliary cooling water pump check valve was disassembled and inspected. The inspection identified several corroded and pitted areas on the valve discs and seat. In addition, the hinge pin was worn. Due to parts unavailability, the valve was reassembled with the identified discrepancies still existing. During the dual unit outage in December 1989, the valve was disassembled and reinspected per DAP 11-25. The replacement parts that were obtained failed a radiography acceptance test. The valve was again reassembled with the noted discrepancies. New parts were ordered. During the D2R12 refuel outage, an inspection determined that the valve seat had significantly deteriorated. The check valve was removed, gaskets were replaced, and a new check valve was installed.

(6) MOV 3-2301-8:

During the D3R11 Refueling Outage, MOV 3-2301-8 was inspected. Inspection of the valve indicated that the cause of the leakage was steam cutting of the seating surfaces. The valve seating surfaces were lapped and blue-checked satisfactorily. The bonnet seal ring and valve backseat were inspected, and the valve stem was checked for straightness. The motor operator was rebuilt, and its grease replaced. During the rebuild,

the spring pack worm gear was observed to be slightly worn. The spring pack and worm gear were replaced during the Unit 3 Refuel Outage D3R12 (237-200-89-15920).

(7) 3-2301-7:

During the D3R11 Refueling Outage, valve 3-2301-7, was inspected per DAP 11-25. The problems identified were worn hinge pins which resulted in misalignment of the seating surfaces and subsequent erosion of the seating surfaces. The worn hinge pins were replaced. The valve seat and disc were lapped and machined. A blue-check of the seating surfaces was then performed satisfactorily. The check valve is included in procedure DAP 11-25 and in Dresden Technical Staff Surveillance (DTS) 1600-9, Augmented ASME Section XI Leakage Rate Testing.

(8) 3-2301-7 Manual Bypass Valves:

The normally closed manual bypass valves for the 3-2301-7 check valve were inspected during the D3R11 Refuel outage. A pressure decay test was performed on the volume bounded by the four Unit 3 valves. See Figure 4 for manual bypass valve configuration. No observable leakage was noted.

(9) 3-2301-51:

The auxiliary cooling water pump check valve for Unit 3 was disassembled and inspected during the D3R11 Refuel outage per DAP 11-25. The inspection identified several corroded and pitted areas on the valve discs and seat. Due to parts unavailability, the valve was reassembled with the identified discrepancies still existing. New parts were ordered. The necessary repairs were completed during the Unit 3 refueling outage (D3R12) (237-200-89-15922).

(10) MOV 3-2301-10:

During the D3R11 Refueling Outage, MOV 3-2301-10 was inspected. The inspection of the valve revealed: Steam cutting and washing of the seating surfaces; a nick in the bonnet pressure seal ring seating surface; a nick in the bonnet pressure seal ring seating surface; pitting of the valve body pressure seal ring area (washing of previous weld material in this area was also observed); and pitting of the valve plug guide. The valve seating surfaces were lapped/machined. The seating surfaces were then blue-checked to verify full contact of the seating surfaces. The valve body pressure seal ring seating surfaces

were machined. The valve bonnet pressure seal ring seating surface was also welded and machined. Blue-checks were performed using the replacement seal ring in order to verify proper seating. The valve body was also visually and ultrasonically (thickness) inspected. The visual inspection indicated slight erosion of the body had occurred immediately downstream of the valve; the ultrasonic testing results verified that the minimum wall thickness of the valve body had not been exceeded.

b. The station has initiated WRs 90328 and 90333 to modify the MOV 2(3)-2301-10 valve. Commonwealth Edison Nuclear Engineering Department has determined that M02(3)-2301-10 would be changed to a drag type valve. Unit 3 M03-2301-10 was modified with the new type valve and tested satisfactorily on April 25, 1992. Unit 2 M02-2301-10 was modified with the new type valve and tested satisfactorily on May 25, 1993.

6. An Ultrasonic Test (UT) on the HPCI Piping upstream of the HPCI Pump Discharge Outboard Isolation Valve, MOV 3-2301-8, was performed during the D3R11 Refueling outage. At several areas on the HPCI discharge piping contained within the Main Steam line tunnel area and on the Torus Catwalk, UT was performed. The results obtained from the UT indicated that there was not any evidence of thermal stratification fatigue and resulting cracks.

A UT on the HPCI pump discharge piping between the HPCI pump discharge checkvalve, 2(3)-2301-7, and the outboard HPCI pump discharge isolation valve, MOV 2(3)-2301-8, is not possible on either unit. The station believed at the time the HPCI problems were discovered that there existed a small stretch of piping between the two valves. While deinsulating the HPCI pump discharge piping in the Main Steam line tunnel area, it was discovered that the 2(3)-2301-7 valve was butt welded to the MOV 2(3)- 2301-8 valve. There is no pipe between these cast carbon steel valves, and therefore, a UT can not be performed.

A UT was performed on the Unit 2 HPCI discharge piping contained within the Main Steam line tunnel area and on the Torus catwalk during the D2R12 Refuel outage (237-200-89-15908).

7. A review was also initiated by the Technical Staff to investigate why the HPCI piping contained in the Main Steam line tunnels of both Units 2 and 3 was insulated since as-built design documents indicate that this HPCI piping should not be insulated (237-200-89-15909).

Investigations conducted into the identified insulation discrepancies yielded no substantial reasons for the presence of the insulation. The insulation has been removed from the discharge piping in the Main Steam line tunnel on both Units 2 and 3. The architect engineer contracted to verify the HPCI system as-found operability status

utilized insulated HPCI piping in the analysis. A review by the Commonwealth Edison Company Nuclear Engineering Department determined that both HPCI systems were operable in the as-found condition.

8. A review of the ISI program was conducted by Station personnel, as described in Section C of this report. In addition, the normal ISI program is utilized to walkdown all systems with high temperature, high pressure to low temperature, low pressure interfaces on both Units 2 and 3 for deficiencies similar to that discovered on the HPCI systems (237-200-89-15910).

   The ASME Section XI component support inspection program requires each Class 1, 2 and 3 support be inspected within a 10 year period. In addition, the code requires certain minimum and maximum percentages of supports to be inspected during each three year period. These percentages are applied across each class of support across each system within the class boundary. By applying the percentages in this manner, it is ensured that no Class 1, 2 or 3 piping system goes an excessive amount of time without having inspections performed on its supports. Section XI also has rigorous requirements for expanding the sample size when discrepancies are noted. This ensures that the extent of system support problems will be identified and corrected in a timely manner. Finally, Section XI requires the reinspection within three years of any support which revealed discrepancies during an inspection. This ensures that any generic or recurring problems in a system will be identified.

   Based on the above, the ISI support inspection program will detect, determine the extent of, and correct support discrepancies on Class 1, 2, and 3 systems in a timely manner. Therefore, augmentation to the inservice inspection program is not deemed necessary.

March 19, 1990 Event

1. VT qualified personnel conducted VT-3/4 visual inspections for 38 of the 40 supports installed. The two supports not inspected are spring cans and are located in the Main Steam line tunnel area. Only one other support was found with a discrepancy. The two supports and their associated deficiencies are as follows:

   a. M-1151D-86: The strut was not loaded, the bottom locknut on the strut was loose, and the pipe clamp was loose.

   b. M-1151D-5: The support was not loaded, and the press fit bushing contained in the upper clevis was dislodged.

   These supports were last VT inspected on October 28, 1989. The pipe clamp on M-1151D-86 had been found to be skewed approximately five inches and repaired under Work Request (WR) 88363. No deficiencies had been identified on M-1151D-5.

WRs 91721 and 91720 were initiated to repair the identified discrepancies, and the work was completed on March 21, 1990. Operability of the HPCI system was reviewed and it was concluded that FSAR stress requirements were met, and that HPCI was operable.

The two spring cans in the Main Steam line tunnel area were inspected for damage during a short outage in 8/90 (237-200-89-15912). Inspection of M-1151D-269 found this spring can slightly out of tolerance. The spring can was put into tolerance per Work Request 94379 on August 6, 1990. Inspection of M-1151D-270 found the scale on the spring can rubbed off. The load was evaluated and was found to be within tolerance. Both spring cans were noted to be undamaged.

2. In addition, due to the Unit 2 event on March 19, 1990, a second revised HPCI system standby valve lineup was performed (Figure 3). This revision consisted of closing MOV 2-2301-15 (normally open), closing MOV 2-2301-49 (normally open) and opening MOV 2-2301-48 (normally closed) (237-200-89-15913). This revised off-normal valve lineup was also reviewed in accordance with 10CFR 50.59 and it was determined that no unreviewed safety question existed.

   The realignment of the HPCI MOVs 2-2301-15, 48, and 49 does not affect the operability of the HPCI system. In the event of a HPCI initiation signal, MOVs 2-2301-15 and 49 are interlocked closed, and MOV 2-2301-48 is interlocked open. The revised valve lineup placed these valves in the required initiation positions. This valve line-up is no longer utilized due to repair of valves MOV 2-2301-8, MOV 2-2301-10, and 2-2301-7 during the D2R12 refuel outage.

3. Procedure changes were implemented as a result of the Unit 2 March 19, 1990 event (237-200-89-15914). These procedure changes consisted of maintaining the revised HPCI system valve lineup of MOVs 2-2301-8 and 48 in the open position and MOVs 2-2301-9, 15 and 49 in the closed position to ensure the test sequences utilized minimize the establishment of a back leakage flowpath, to provide for continuous temperature monitoring during surveillance testing, to provide direction in obtaining discharge piping temperature data, to provide cautions instructing the operator on proper operation of MOV 2-2301-10 and the interlock associated with MOVs 2-2301-35 and 36, to provide direction for operators to rapidly close MOVs 2-2301-9, 10 and 15 after a HPCI turbine trip or system isolation, and to check discharge piping temperature prior to a turbine restart after a trip or system isolation. (These actions have been terminated due to repair of valves MOV 2-2301-8, MOV 2-2301-10, and 2-2301-7 during the D2R12 refuel outage.)

   Lastly, SP 90-4-78, Unit 2 High Pressure Coolant Injection (HPCI) System Operability Verification, was written to provide instruction for the operators to properly operate the HPCI system in the revised standby valve lineup shown in Figure 3.

4. Additional actions taken:

   a. The lens covers on the 902-3 Control Room panel for MOVs 2-2301-15, 48 and 49 were changed to reflect the standby valve lineup shown in Figure 3, and to maintain the green board concept (237-200-89-15915). (These actions have been terminated due to repair of valves MOV 2-2301-8, MOV 2-2301-10, and 2-2301-7 during D2R12.)

   b. All licensed personnel were trained on what transpired during the March 19, 1990 event. Included in this training was a detailed explanation on how MOV 2-2301-10 failed to completely close, corrective actions taken to mitigate future occurrences, along with lessons learned from the investigation performed (237-200-89-15916). In addition, the importance of rapidly closing MOVs 2-2301-9, 10 and 15 after a HPCI Turbine trip or system isolation so as to minimize the depressurization of the discharge piping was stressed.

   c. MOV Control Switch Caution Cards (237-200-89-15918). (Caution cards have been removed due to repair of valves MOV 2-2301-8, MOV 2-2301-10, and 2-2301-7 during the D2R12 refuel outage.)

      (1) A caution card was placed on MOV 2-2301-15 to instruct the operator to leave closed except for testing.

      (2) A caution card was placed on MOV 2-2301-48 to instruct the operator to leave open to prevent overpressurization of the pipe while MOV 2-2301-15 is closed except for testing.

      (3) A caution card was placed on MOV 2-2301-49 to instruct the operator to leave closed except for testing.

5. Routine periodic temperature monitoring of the HPCI discharge piping has been established. The following programs and/or actions have been initiated.

   a. The Technical Staff and Operations Department personnel have initiated daily temperature monitoring of the Unit 2 and 3 HPCI pump discharge piping. Permanent procedure DOS 2300-8, HPCI Pump Discharge Line Temperature Monitoring, completed Dresden On Site Review Process (DOSR) on April 12, 1990 and requires the performance of temperature surveys of the HPCI pump discharge line on a monthly basis or when directed by other HPCI procedures.

   b. A modification request was initiated by Operations Department personnel requesting that permanent temperature monitoring be installed on both HPCI systems. The modification request was accepted by the Station Modification Review Committee (SMRC) and expected to be implemented during 1994 non outage period. Temporary local temperature measuring devices are presently being used. Operations Department personnel are recording the temperatures

daily in Appendices F (and G), Unit 2 (and 3) Turbine Building and Reactor Building Level 1 Operator Round Book.

c. A review of systems with Pressure Isolation Valve (PIV) interfaces was conducted by Technical Staff personnel. The PIVs are contained in the IST program and presently receive Appendix J type leak tests. The LPCI and Core Spray systems are the two interfaces that Station personnel have decided to augment with periodic temperature monitoring in accordance with Dresden Technical Procedure (DTP) 27, Infrared Themography Program (237-200-89-15926).

d. Also, the HPCI pump discharge piping temperature on both units was monitored on an informal basis prior to the March 19, 1990 event. There were no significant temperature rises noted on either Unit 2 or 3 except for the March 19, 1990 event on Unit 2.

6. The MMD implemented a surveillance tracking item to informationally pressure test 2(3)-2301-9, MOV 2(3)-2301-8, and MOV 2(3)-2301-10 on an every refuel outage frequency.

F. Previous Occurrences:

None

G. Component Failure Data:

Manufacturer	Nomenclature	Model Number	Mfg. Part Number
Rockwell Manufacturing Company	Tilting Disc Check Valve	970 JMMNY	N/A
Crane Company	Gate Valve	783-U	N/A
Crane Company	Globe Valve	7183-U	N/A
Mission Valve and Pump Company	Duo-Chek Check Valve	30-SMF-402	N/A

A NPRDS search was conducted on the four valves. The Rockwell Manufacturing Company check valve has several reported instances of seat leakage problems. Also the Crane Company gate valve has experienced several instances of seat leakage problems. The Crane Company Globe valve had only two instances of seat leakage problems. The Mission Valve and Pump Company check valve is not reportable to NPRDS.

Table 1
HPCI Support Inspection Results for Unit 2

On October 28, 1989, all of the HPCI discharge line supports were given a VT-3/4 inspection per the Special Process Procedures Manual (SPPM). Per the SPPM, these inspections were documented on the Visual Inspection Data Form VT-3/4-1.1 The results are summarized in the table below.

In addition to the HPCI discharge line supports, the branch line supports off of the discharge lines were also inspected.

On supports M-1151D-4, 9, 10 and 155, Magnetic Particle Testing (MT) was performed on all of the accessible welds. In addition to this, the sheer lugs on the M-1151D-4 and 9 supports and the hanger to embedded plate welds on the M-1151D-10 and 155 supports were magnetic Particle Tested. These Non-Destructive Examination (NDE) tests did not reveal any service induced flaws.

HPCI Discharge Piping Support No. (M-1151D-__)	Results	Work Request No.
Supports in the Unit 2 HPCI room		
-281	No indications	-
-282	"	-
-283	"	-
-138	"	-
-92	"	-
-285	"	-
-95	"	-
-85	"	-
-93	"	-
-80	"	-
-89	"	-
-276	"	-
-149	Strut not loaded, pipe clamp skewed causing binding on strut	88371
-151	Strut locknut loose	88372

HPCI Discharge Piping Support No. (M-1151D-_)	Results	Work Request No.
-152	No indications	-
Supports in the LPCI pump room		
-147	Pipe clamp rotated, jam nut loose	88247 & 88355
-146	Pipe clamp rotated	88248
-168	No indications	-
-167	Pipe clamp shifted 1/4 inch	88354
-273	Bottom lock nut loose, weldless eye bolt bent, clamp spacer not contacting clamp, hanger rod locknut loose	88356
Supports in the suppression chamber area		
-86	Pipe clamp skewed about 5 inches from vertical	88363
-153	Inadequate thread engagement on one Concrete Expansion Anchor (CEA), 1/16 inch gap on base plate	88360
-154	Inadequate thread engagement on seven CEAs, pipe clamp skewed down, strut binding, strut locking nut loose	88361 & 88329
-155	Nine CEA's loose, two baseplates with 1/16 inch gap, one baseplate with 1/8 inch gap and spalled concrete, one baseplate with a 3/16 inch gap and spalled concrete, crack in concrete ceiling running from one baseplate to diagonally opposing backplate (about three feet in length)	88331
-96	Support not loaded, inadequate thread engagement on one CEA	88362

HPCI Discharge Piping Support No. (M-1151D-__)	Results	Work Request No.
-84	Strut loose and unloaded	88333
-82	Strut loose and unloaded	88332
-10	One loose CEA, one CEA missing washer, 1/16 inch gap in baseplate, inadequate thread engagement on three CEAs	88364 & 88334
-81	No indications	-
-5	No indications	-
-83	No indications	-
-9	No indications	-
-4	3/8 inch gap in one baseplate with red head inserts pulled out 1/4 inch, 1/4 inch gap in one baseplate with red head inserts pulled out 1/8 inch, spalled concrete around the CEA	88330
-269	Reinspected under shutdown conditions to verify no indications	-
-270	Inadequate thread engagement on top clevis bolt evaluated and found acceptable, spring can missing scale so deflection was measured and found to be within tolerance	-

Table 2

HPCI Support Inspection Results for Unit 3

HPCI discharge piping Support No. (M-1187D-_)	Results	Work Request No.
Supports in the HPCI Room		
-273	Satisfactory	-
-274	Satisfactory	-
-275	Satisfactory	-
-267	Satisfactory	-
-258	Spring Can set at 2800 lbs., satisfactory	
-111	Loose jamnut on strut, loose pipe clamp spacer	88419
-68	Satisfactory	-
-69	Spalling on embed plate, not supporting load, loose turnbuckle nut	88418
-70	Satisfactory	-
2304-M-210	(3-4218) loose upper locknut, loose eyenut locknut, eyenut not fully engaged	88417
-67	Loose pipe clamp spacer	88416
-88	Loose pipe clamp spacer	88415
-104	Satisfactory	-
Supports in the LPCI Pump Room		
-268	Spring can set at 9000 lbs., satisfactory	
Supports in the suppression chamber area		
-89	Satisfactory	-

HPCI discharge piping Support No. (M-1187D-__)	Results	Work Request No.
-72	Satisfactory	-
-256	Spring can, 3300 lbs., loose jamnut	88437
-74	Satisfactory	
-98	Not supporting load, loose jamnut and strut	88436
-75	Not supporting load, shifted on pipe clamp, strut binding, "U"-bolt Locknut loose	88438
-76	Clamp shifted, strut binding, 3/16" gap in base plate	88439
-77	Insufficient thread engagement on 2 CEAs (satisfactory)	-
-78	Satisfactory	-
-79	Spalling on embed plate, loose jamnut	88440
-257	Loose jamnut	88441
2304-M-223	No action support, no nut on top pipe clamp bolt, no pipe clamp spacer, rod jamnut loose, clevis bolt missing locknut	88442
-86	Spalled concrete, insufficient thread engagement on one CEA, 1/8" gap on plate and CEA not torqued, two pipe clamp bolts without nuts	88443
-80	Loose jamnut	88444
-81	Loose jamnut	88445
-82	Insufficient weld at clevis to embed plate, no load supported, spalled concrete, small crack in clevis to embed weld at overlap area	88446
-83	Embed separating at seam, spalled concrete, pipe moved 1/2", upper stop plate contacting pipe, stop plate slightly bent (satisfactory)	88447

HPCI discharge piping Support No. (M-1187D-__)	Results	Work Request No.
Supports in the main steam tunnel area		
-276	Spring can scale painted, loads calculated from dimensions	-
-277	Tolerance calculations were performed for spring can setting	-
Supports on Test Return Line to CST in HPCI Room		
M-1187D-84	Not supporting load	88420
3-2342-2	Spalled concrete, loose locknuts; support is slated for removal	-
M-1187D-85	Satisfactory	
M-1187D-110	Plate and CEAs pulled out	88421
Supports on minimum flow line in HPCI Room		
M-1187D-63	Satisfactory	
-253	One CEA pulled out with 1/4 inch gap in baseplate, load flange binding on can, two tack welds holding can to structure are cracked, scale is painted, evaluated load from dimensions	88435
-58	Rotated pipe clamp	88425
-59	Satisfactory	
HPCI Branch Support in Corner Room between M-1187D-268 -268 and -104)	U-Bolt Nut loose	88422

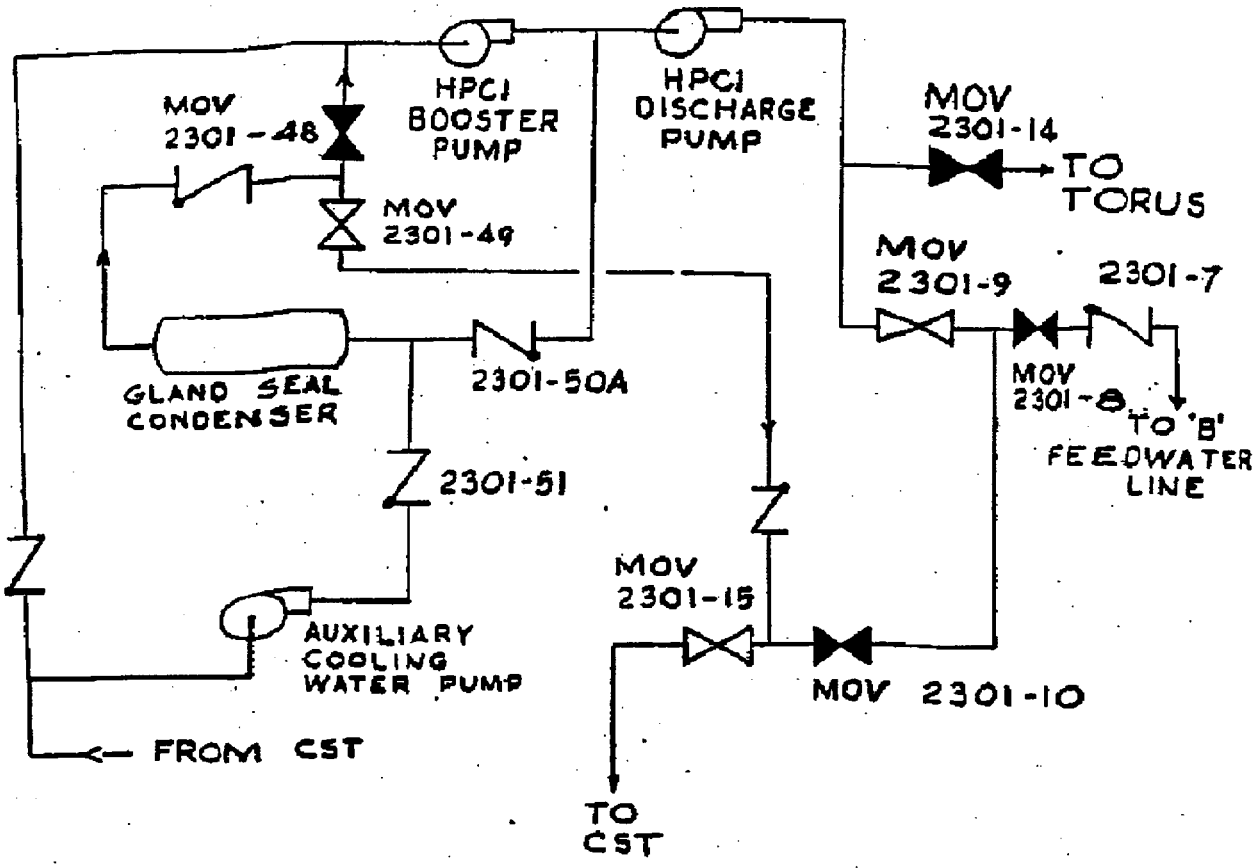

FIGURE 1
BASIC HPCI SYSTEM
(UNITS 2 AND 3 NORMAL LINE-UP)

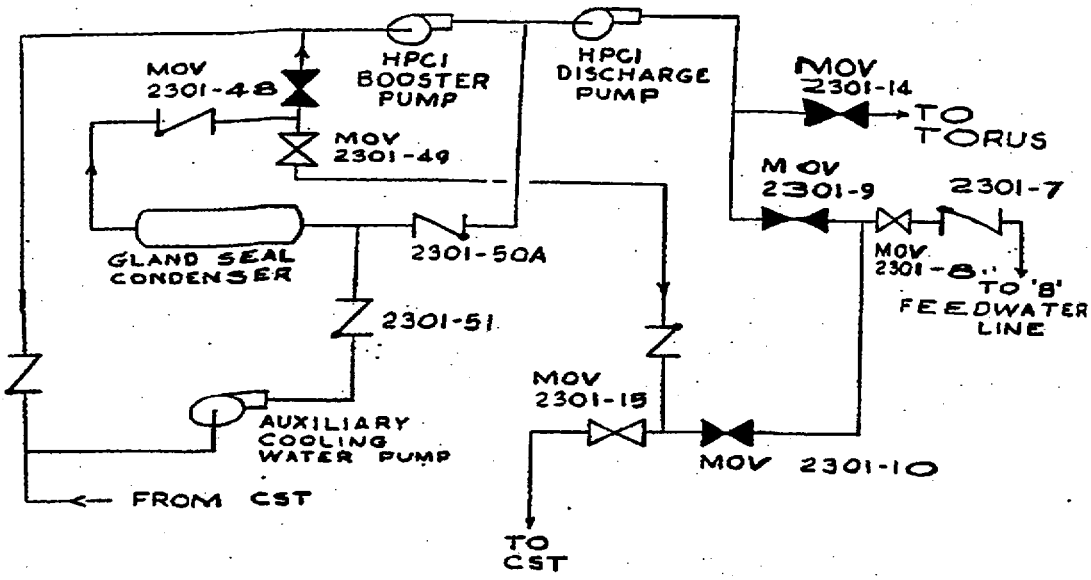

FIGURE 2
UNIT 2 HPCI ALTERNATE VALVE LINE-UP
(POST OCTOBER EVENT)

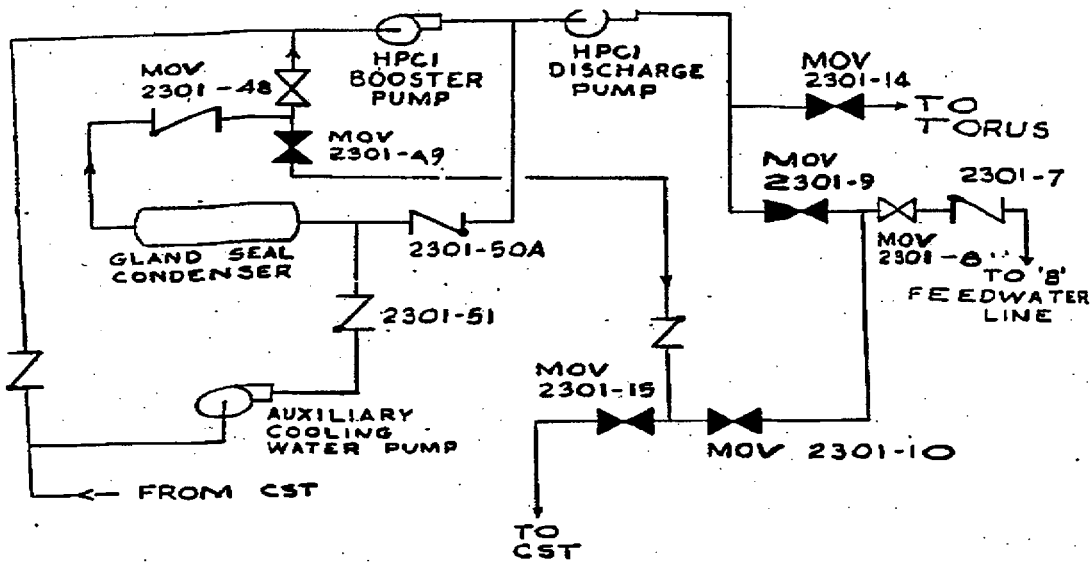

FIGURE 3
HPCI REVISED ALTERNATE VALVE LINE-UP
(UNIT 2 POST MARCH EVENT AND UNIT 3 POST OCTOBER EVENT)

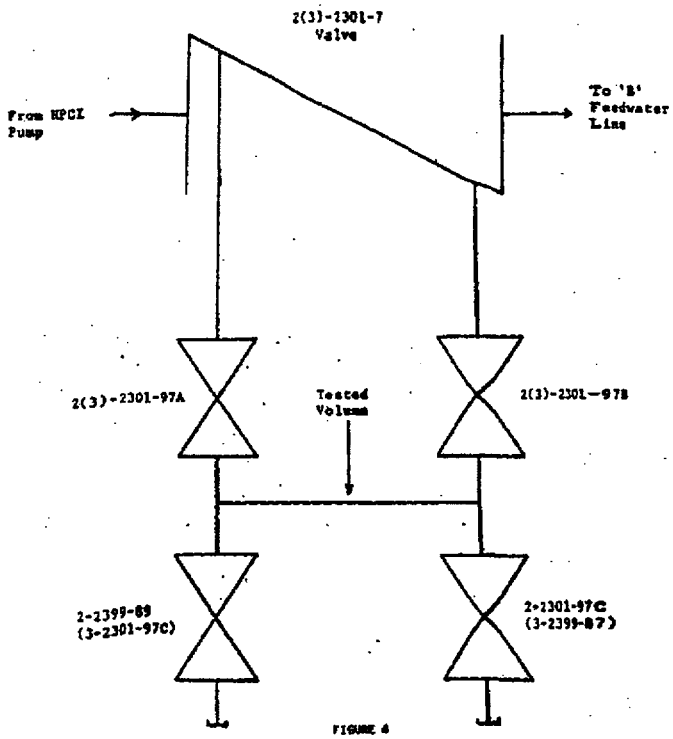

FIGURE 4
HPCI PUMP DISCHARGE CHECK
2(3)-2301-7 MANUAL BYPASS VALVES