Figure 2.10.3-31
60° Orientation Side Drop – Rails, $P_m + P_b$ (75.5g)

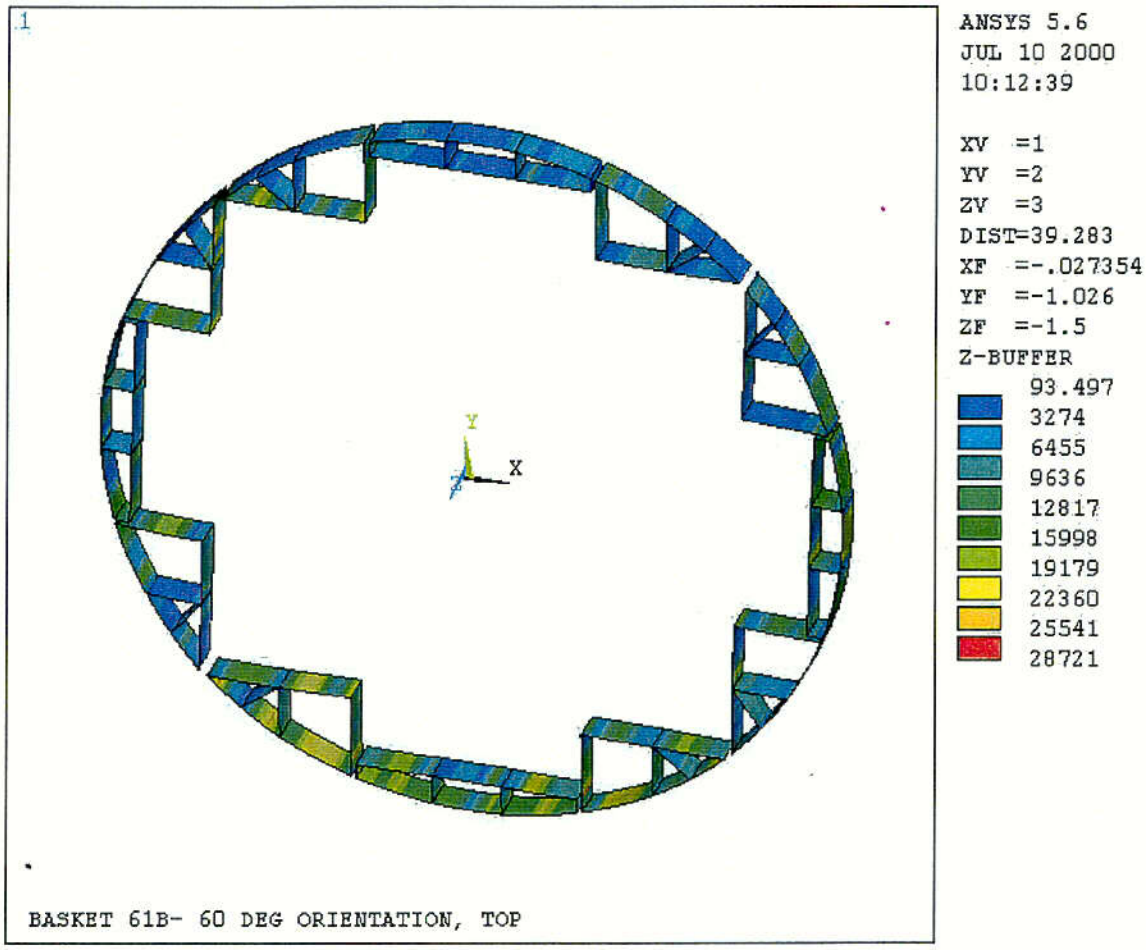

C01

Figure 2.10.3-32
90° Orientation Side Drop – Basket, P_m (75.5g)

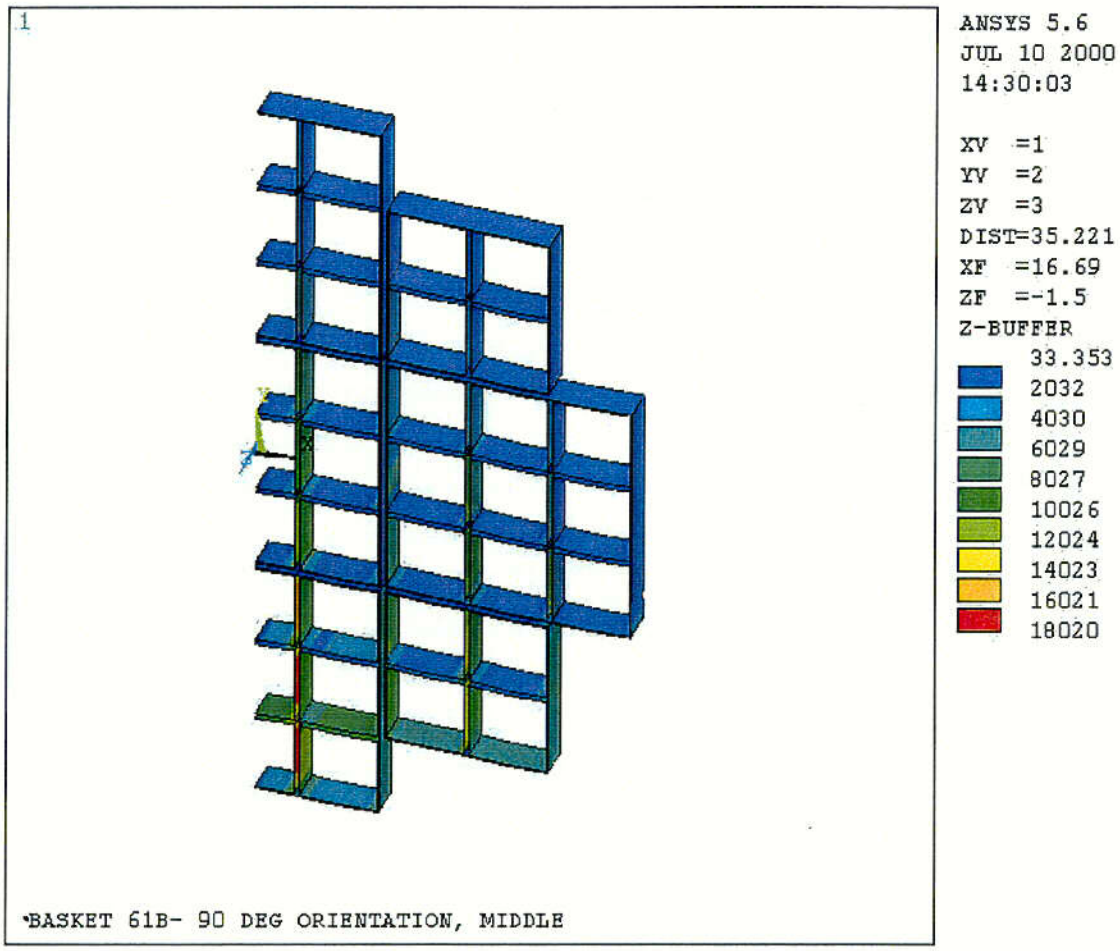

C02

Figure 2.10.3-33
90° Orientation Side Drop – Basket, $P_m + P_b$ (75.5g)

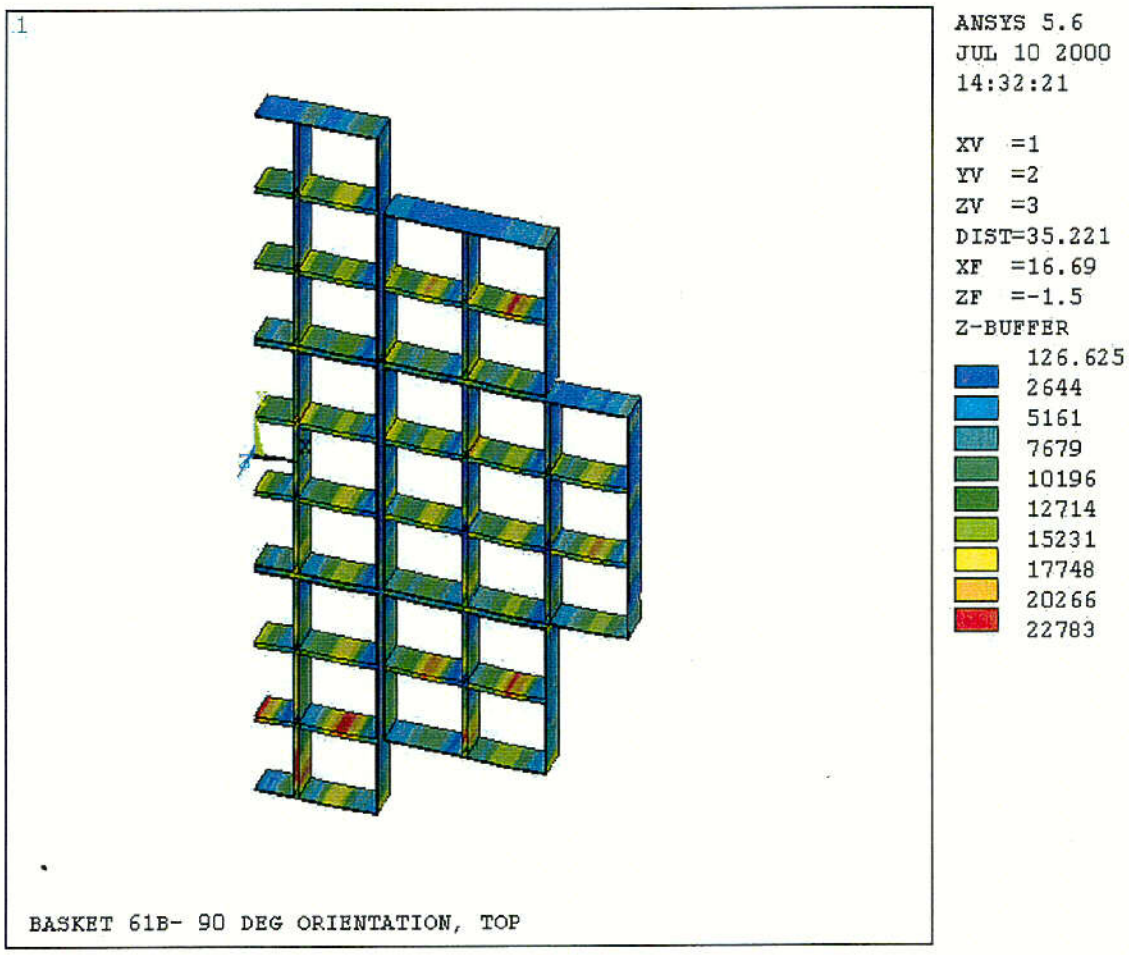

C03

Figure 2.10.3-34
90° Orientation Side Drop – Rails, P_m (75.5g)

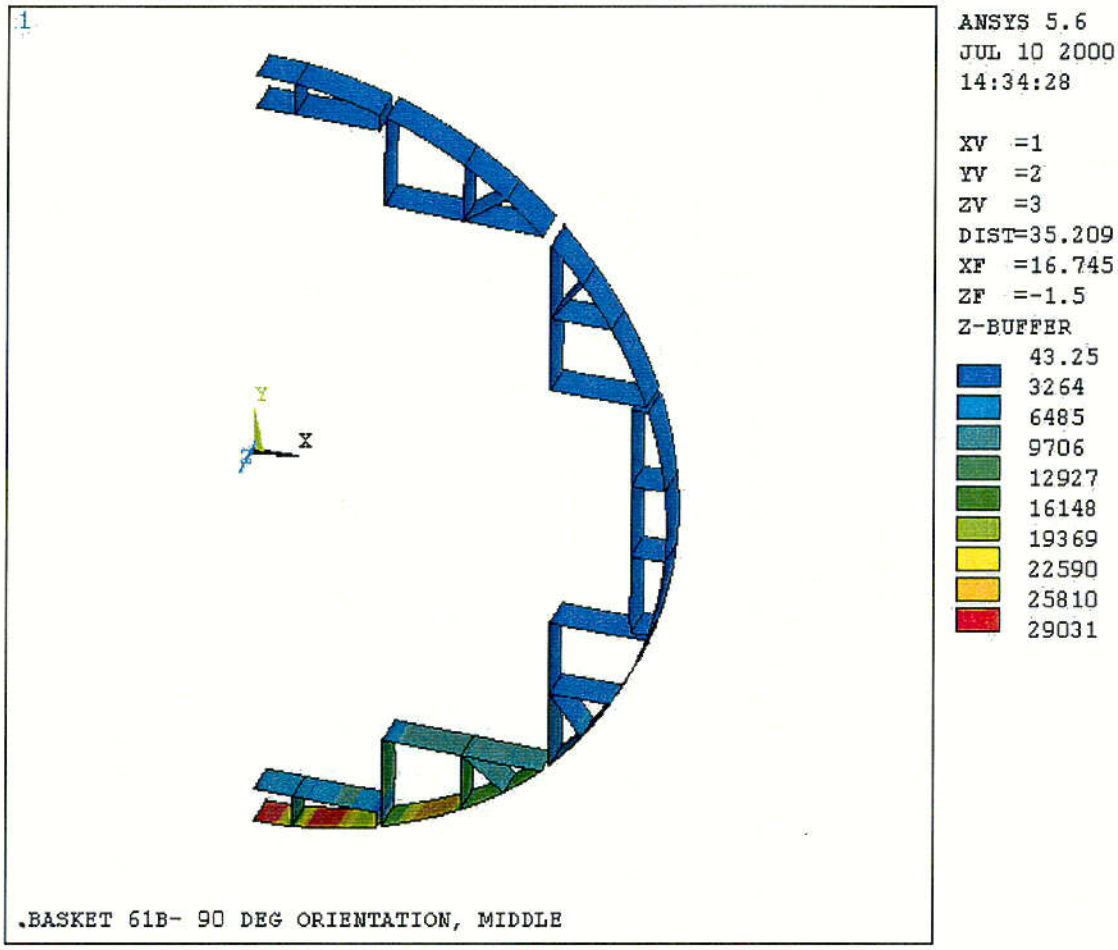

C04

Figure 2.10.3-35
90° Orientation Side Drop – Rails, $P_m + P_b$ (75.5g)

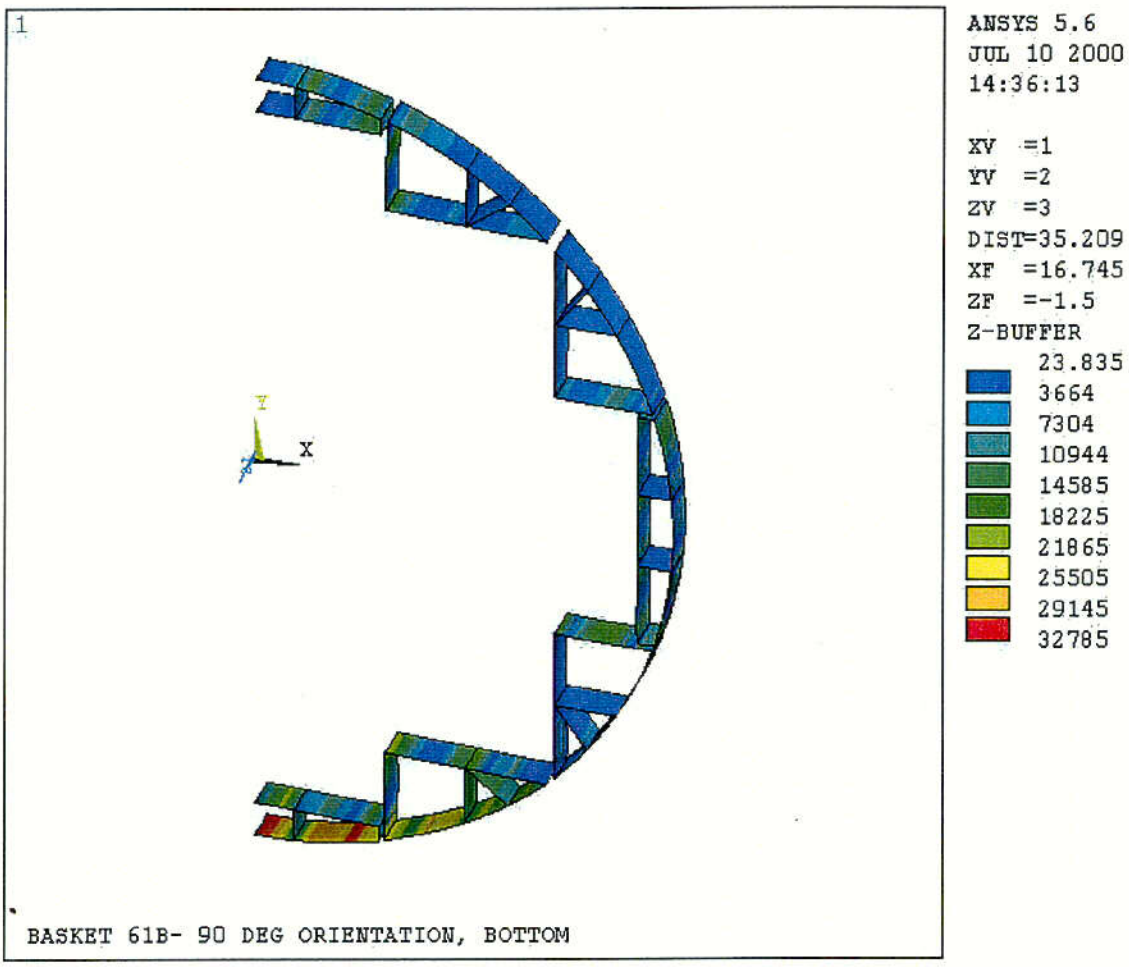

C05

Figure 2.10.3-36
180° Orientation Side Drop – Basket, P_m (75g)

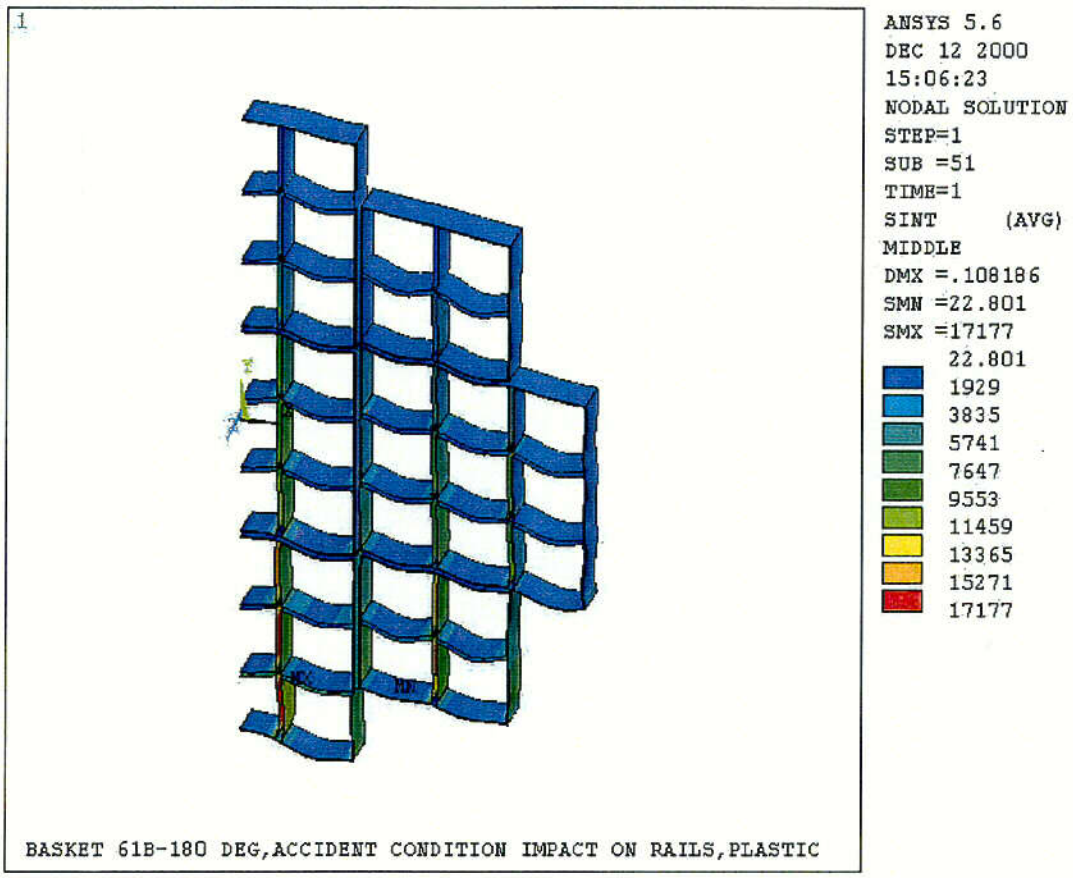

C06

Figure 2.10.3-37
180° Orientation Side Drop – Basket, $P_m + P_b$ (75g)

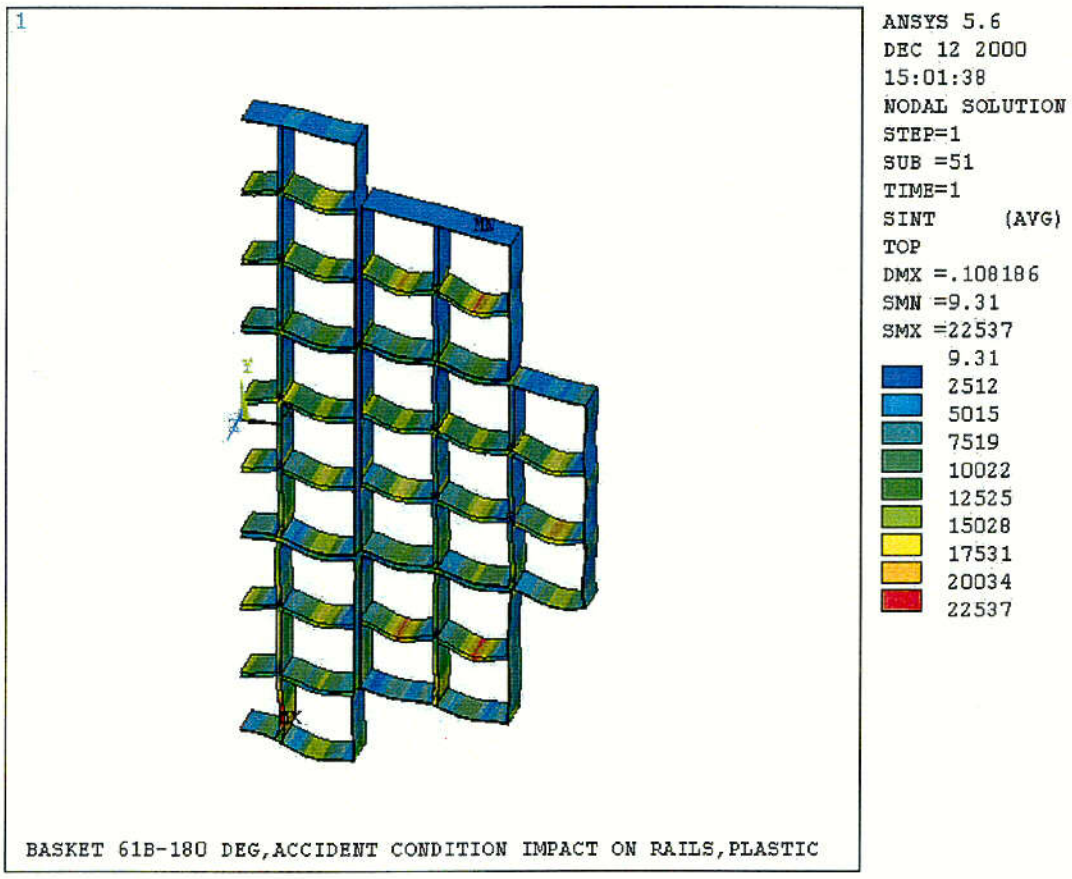

C07

Figure 2.10.3-38
180° Orientation Side Drop – Rails, P_m (75g)

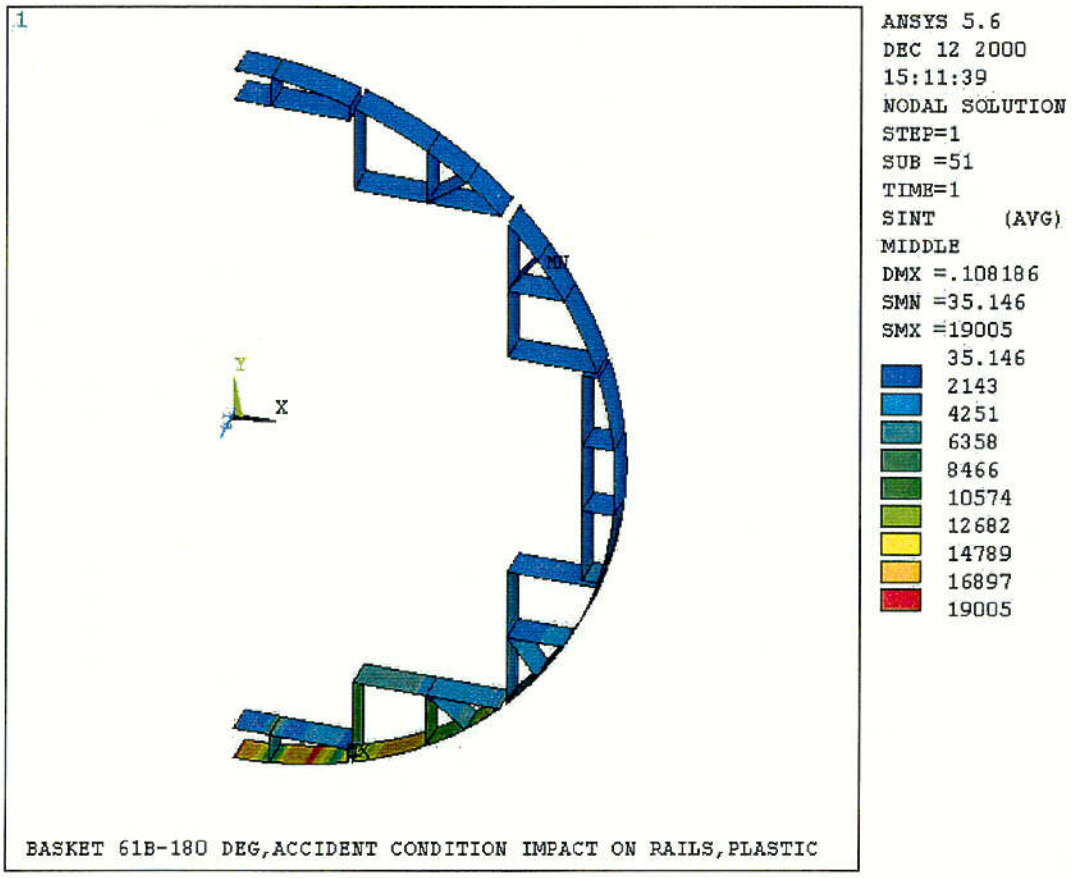

C08

Figure 2.10.3-39
180° Orientation Side Drop – Rails, $P_m + P_b$ (75g)

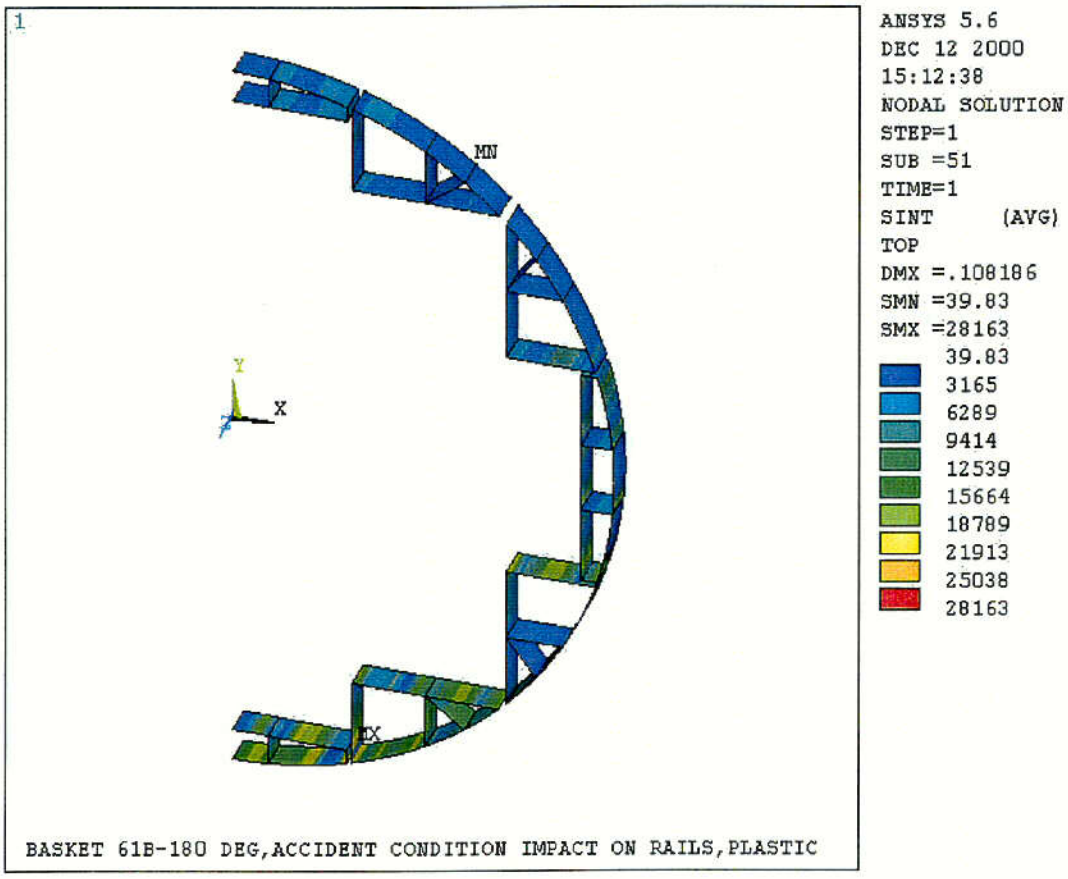

C09

Figure 2.10.3-40
Hold Down Ring Alignment Leg Finite Element Model with Boundary Conditions

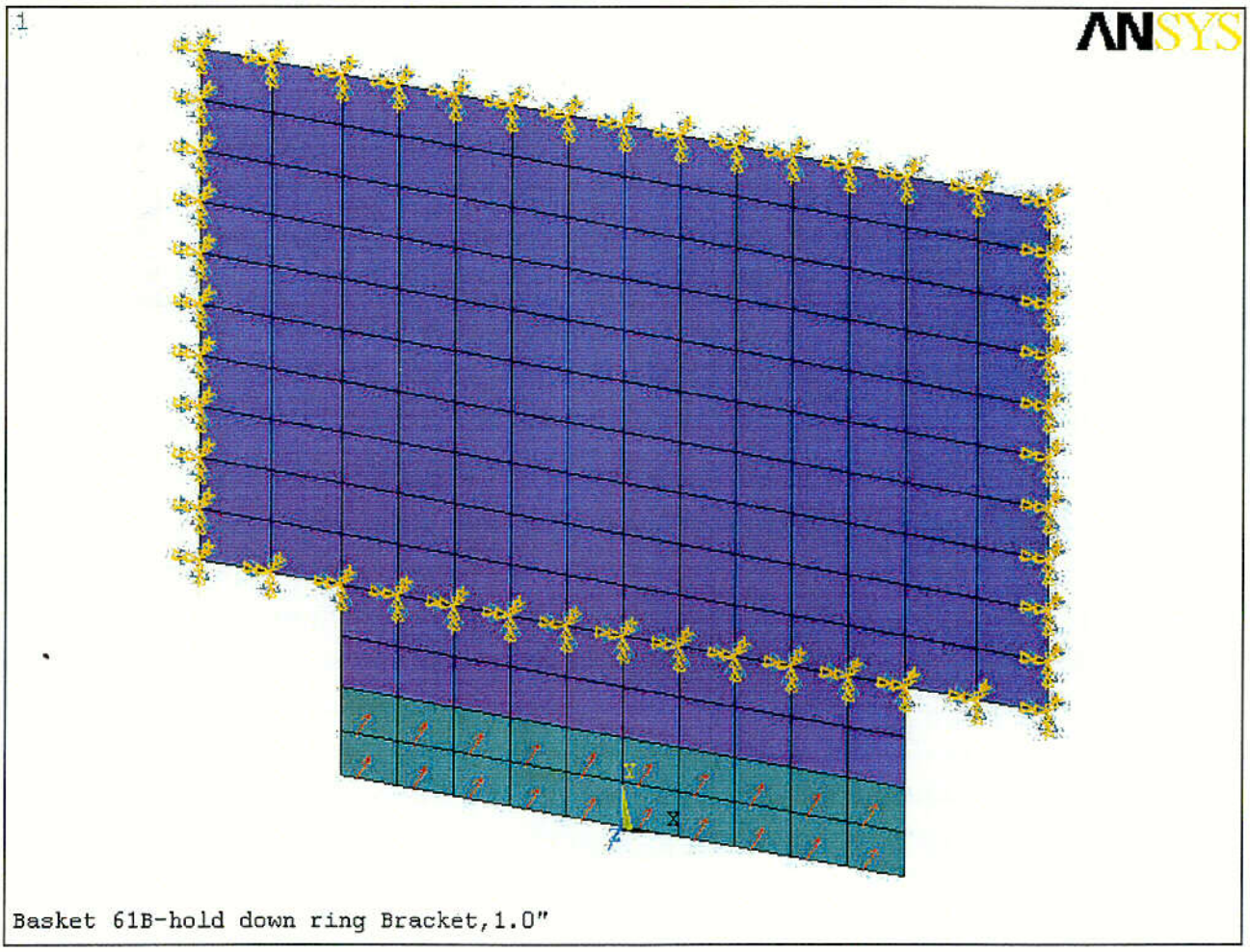

C10

Figure 2.10.3-41
Hold Down Ring Finite Element Model with 90° Drop Orientation Boundary Conditions

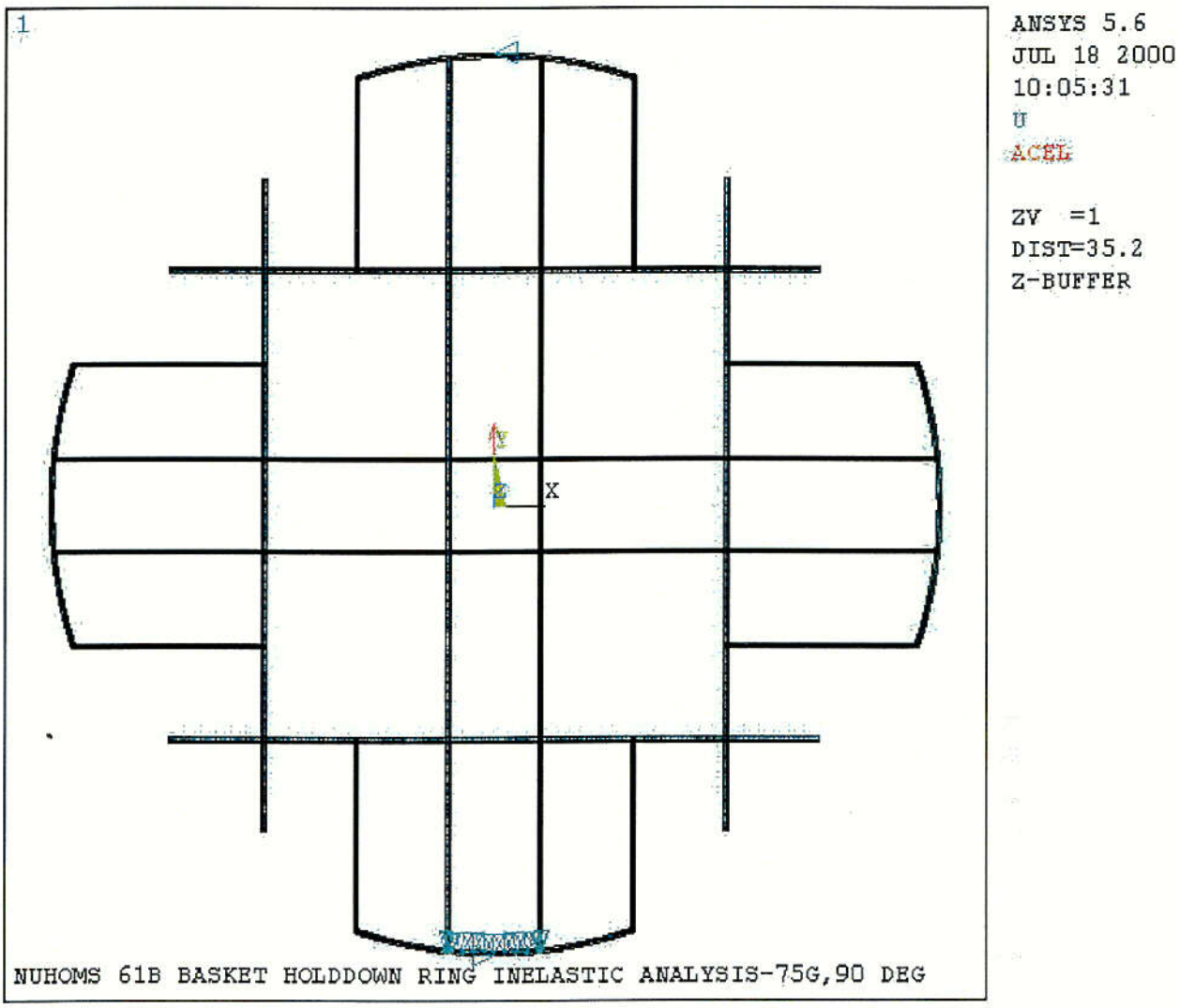

C 11

Figure 2.10.3-42
Hold Down Ring Finite Element Model with 45° Drop Orientation Boundary Conditions

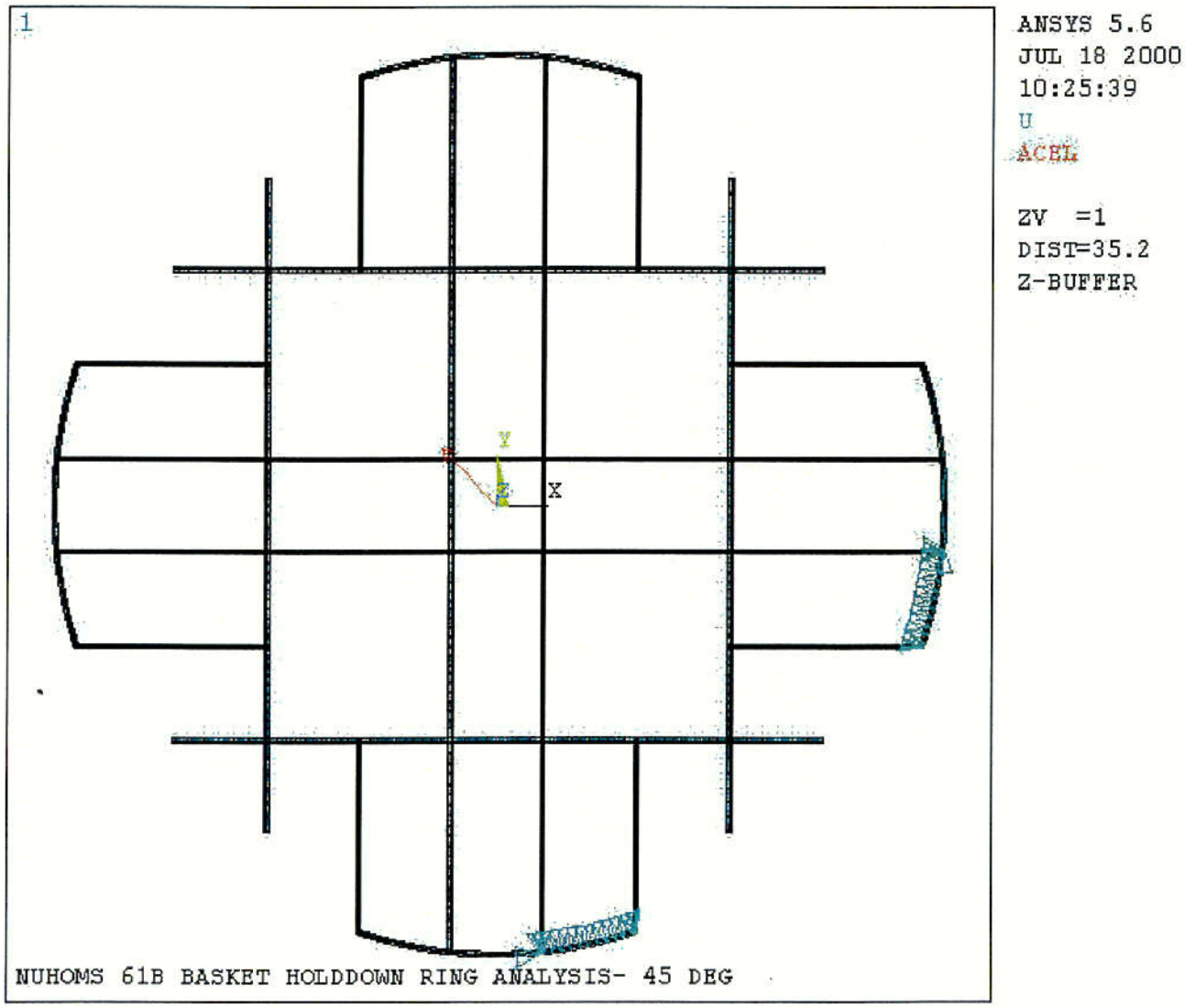

C12

Figure 2.10.3-43
Small Basket Section Finite Element Model Locations

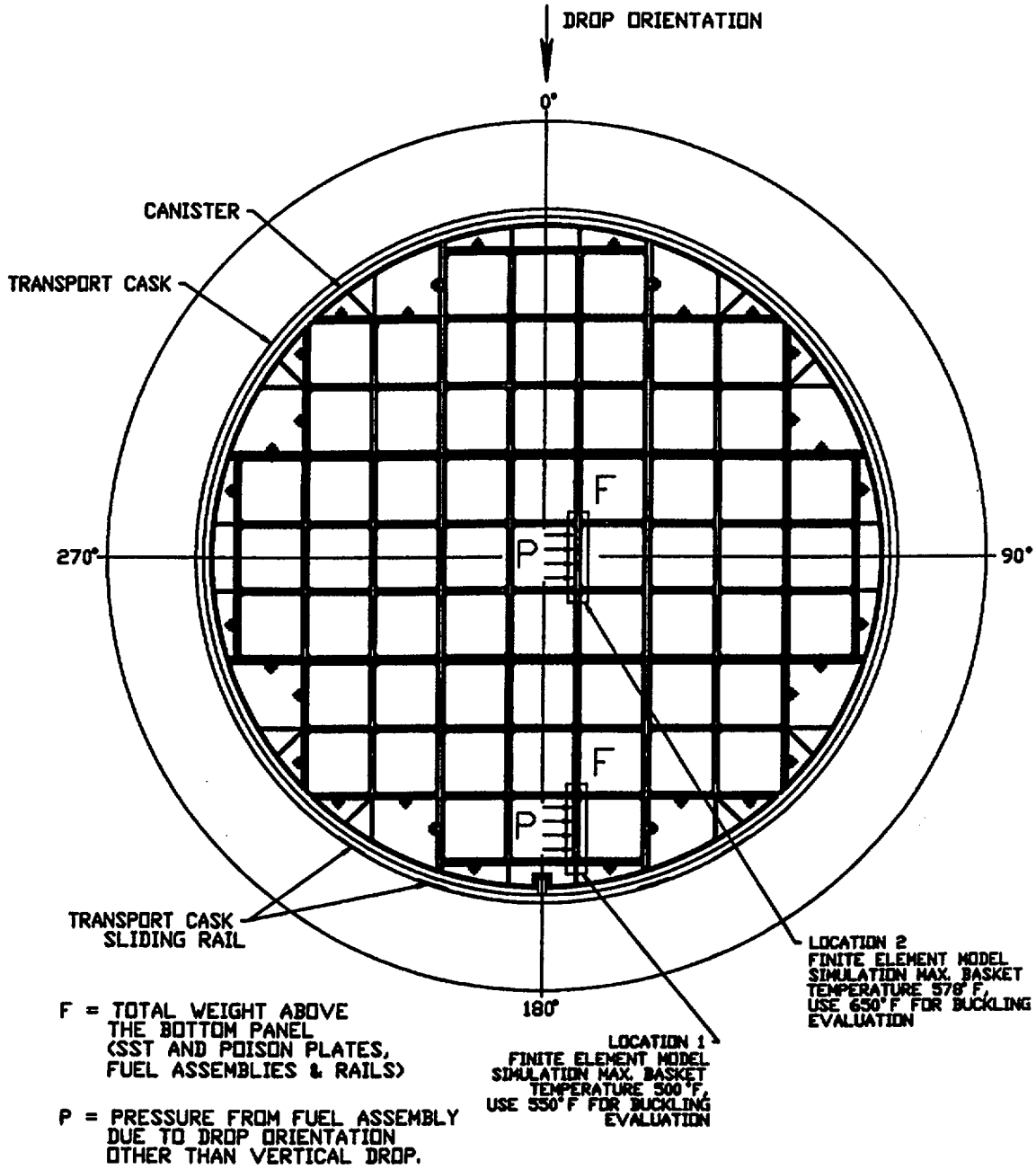

NUHOMS - 61B BASKET BUCKLING EVALUATION

Figure 2.10.3-44
Small Basket Section Finite Element Model with Boundary Conditions

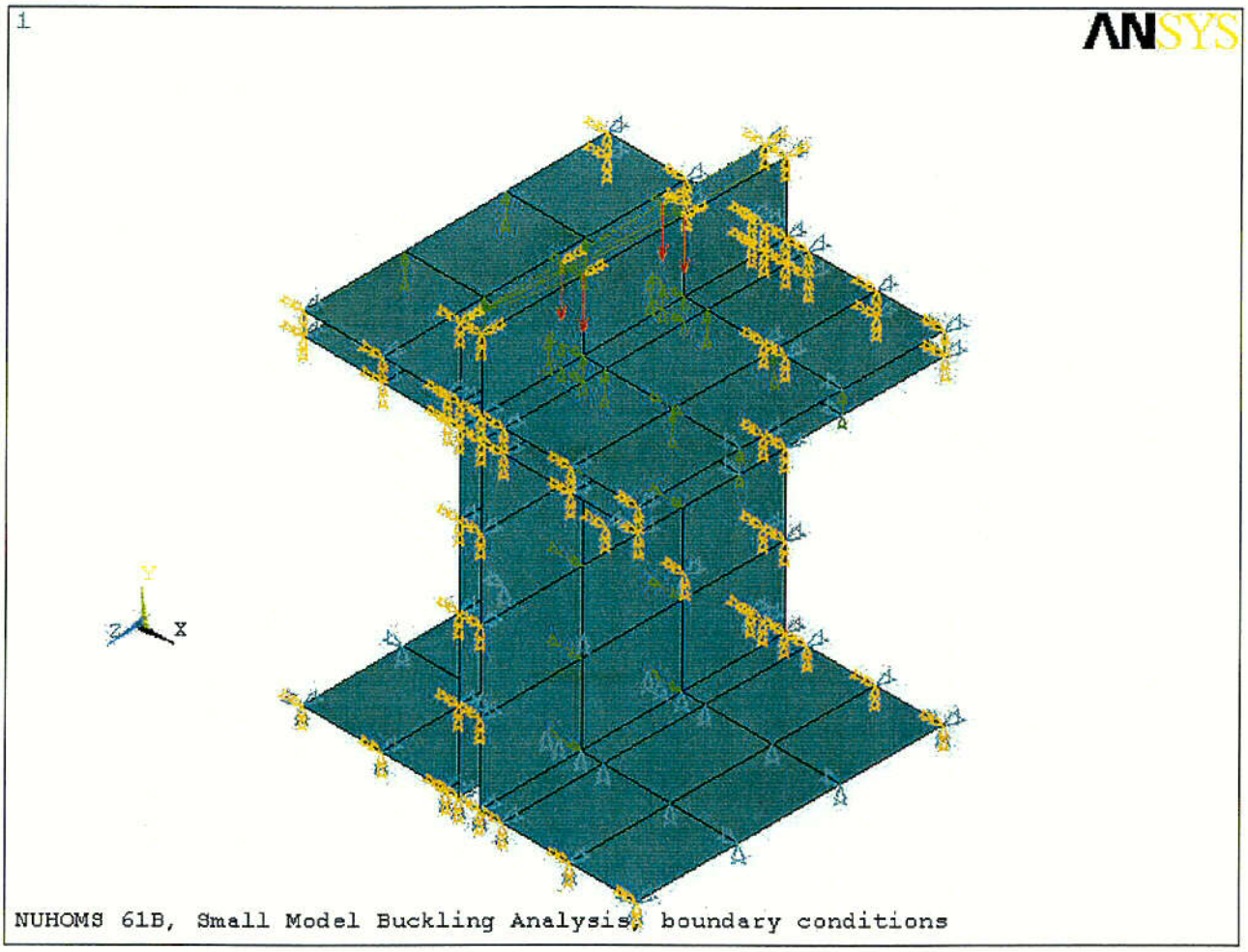

C13

Figure 2.10.3-45
NUHOMS 61B Basket Model Geometry

F= TOTAL WEIGHT ABOVE
THE BOTTOM PANEL
(SST AND POISON PLATES,
FUEL ASSEMBLIES, AND RAILS)

P= PRESSURE FROM FUEL ASSEMBLY
DUE TO DROP ORIENTATION
OTHER THAN VERTICAL DROP.

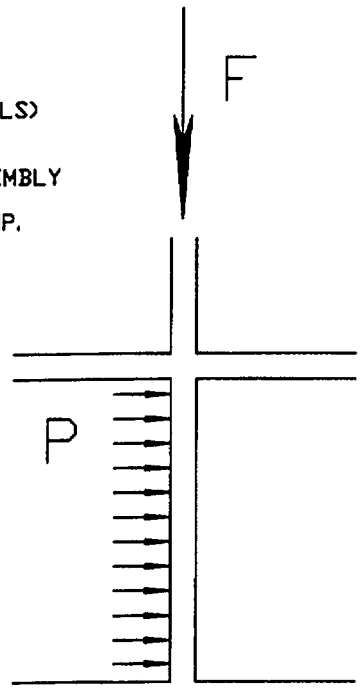

NUHOMS - 61B BUCKLING EVALUATION - LOADING CONFIGURATION

Figure 2.10.3-46
Vertical Drop Buckling Analysis, Location 1

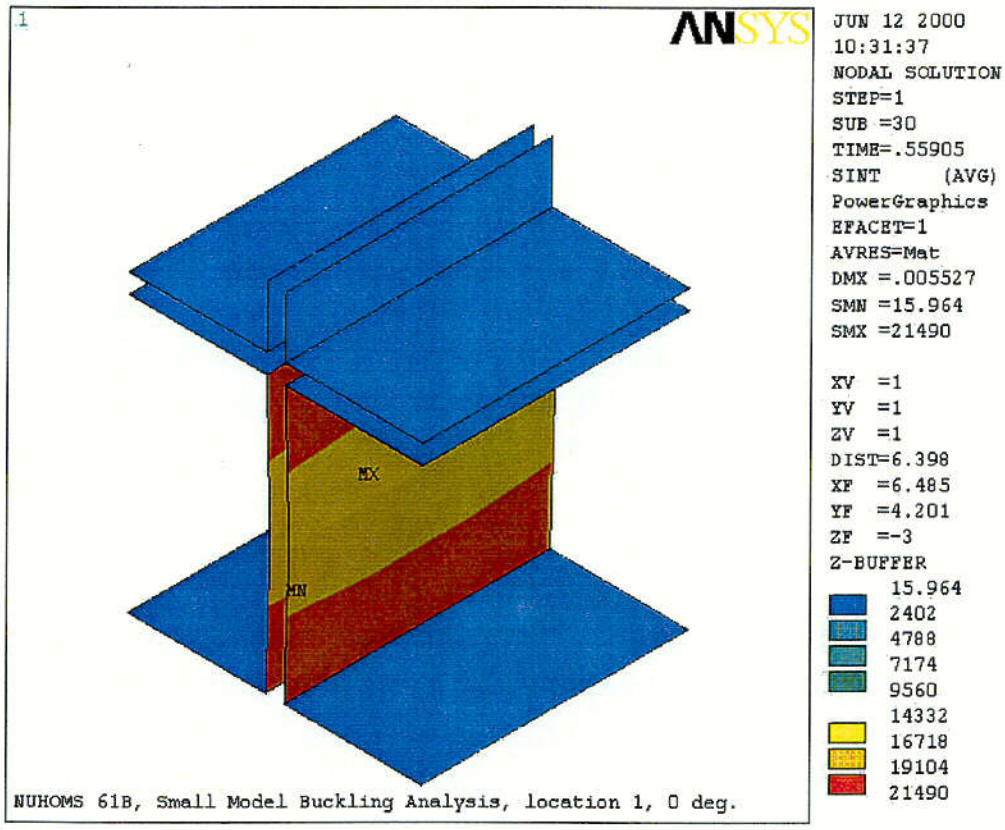

C14

Figure 2.10.3-47
30^0 Drop Buckling Analysis, Location 1

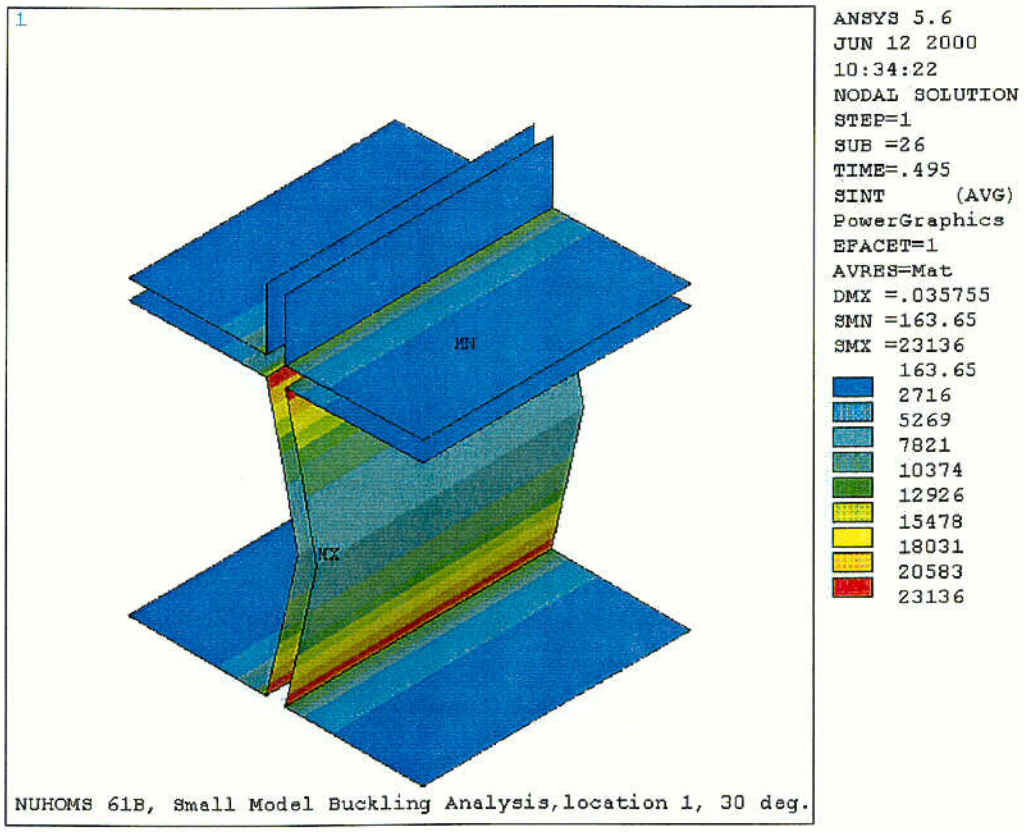

C15

Figure 2.10.3-48
45^0 Drop Buckling Analysis, Location 1

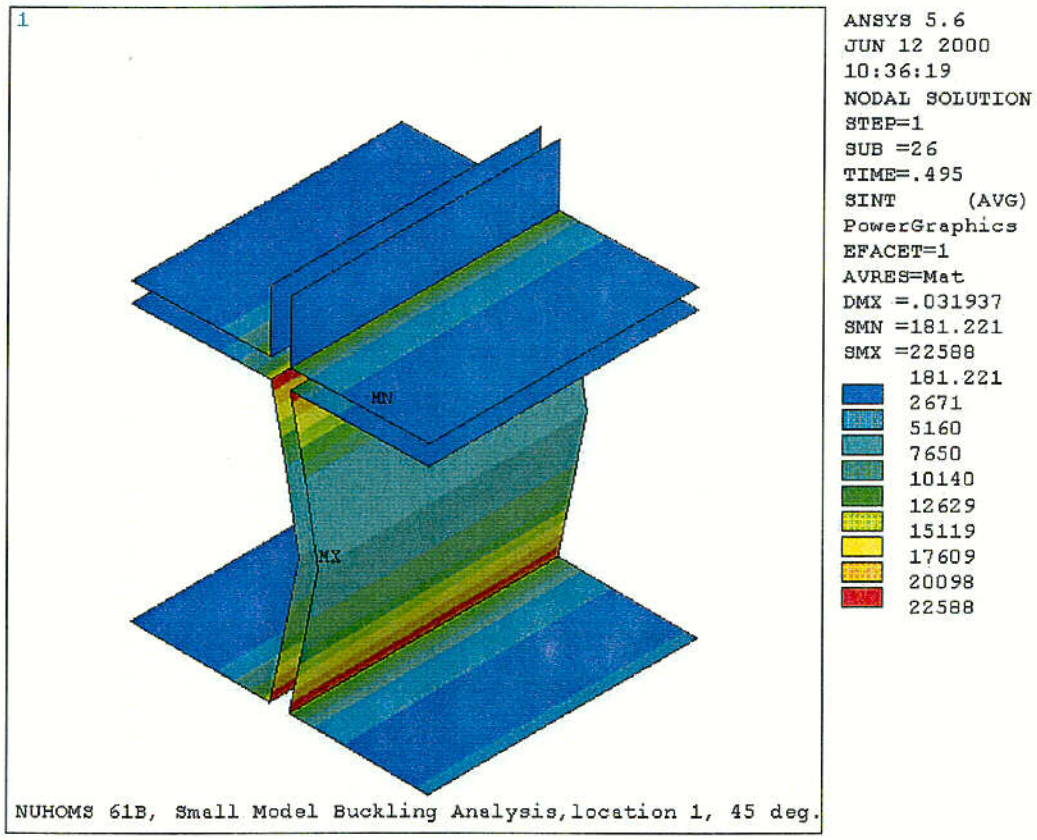

C16

Figure 2.10.3-49
Vertical Drop Buckling Analysis, Location 2

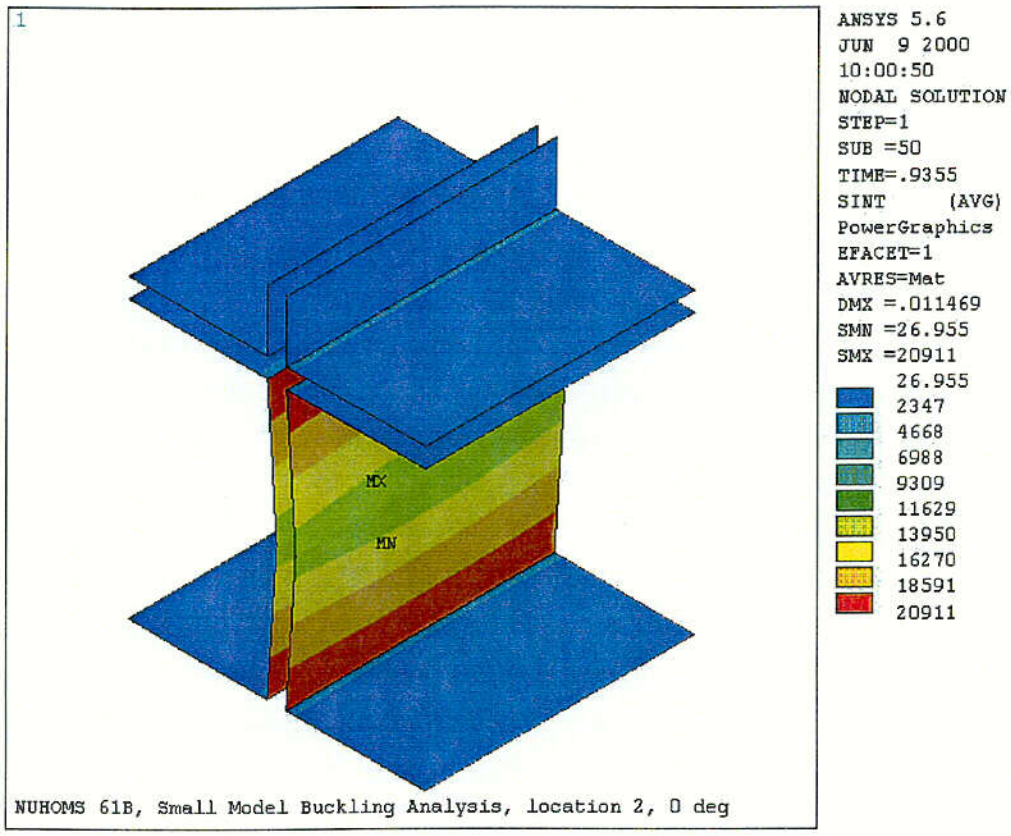

C19

Figure 2.10.3-50
30^0 Drop Buckling Analysis, Location 2

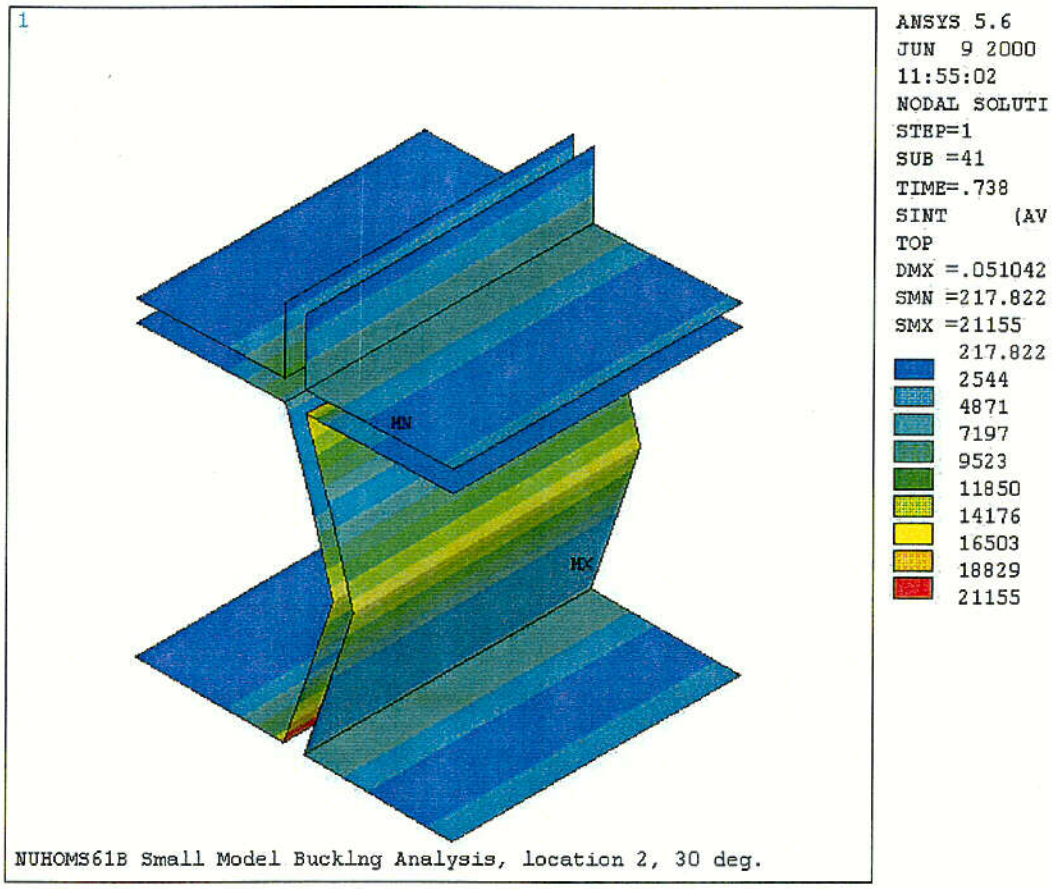

C18

Figure 2.10.3-51
45^0 Drop Buckling Analysis, Location 2

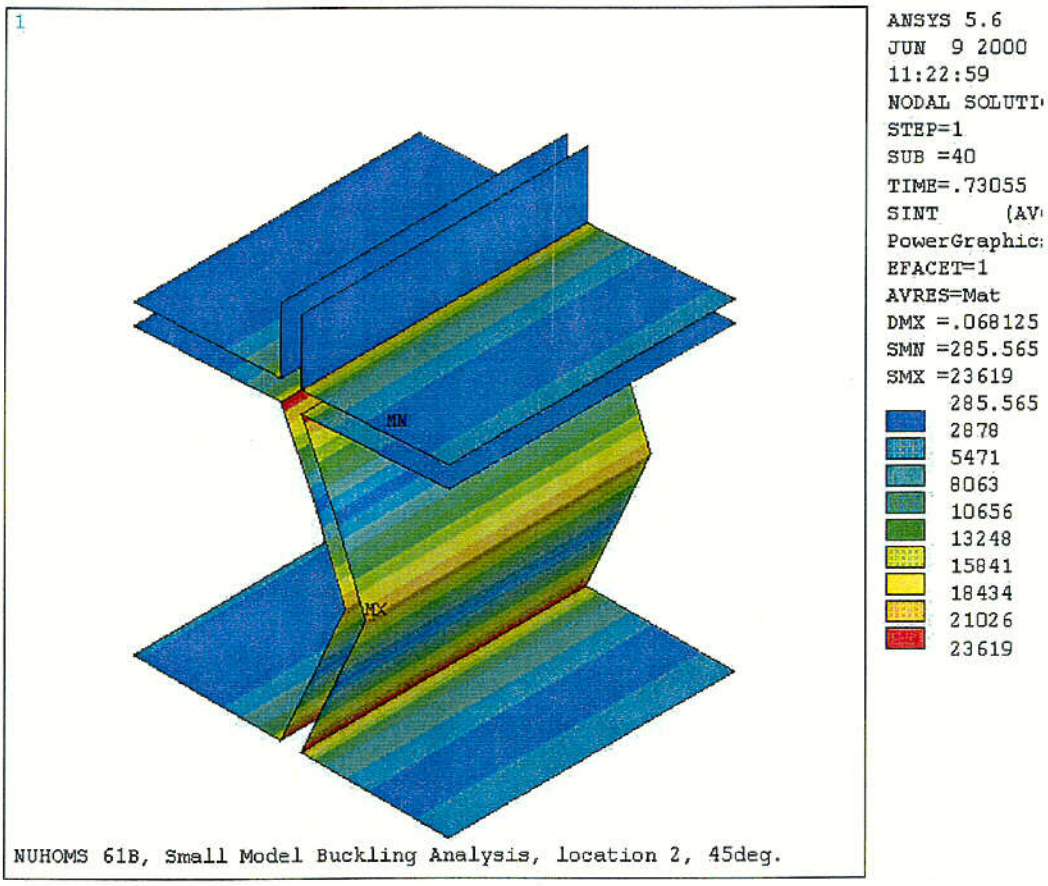

C19

Figure 2.10.3-52
Allowable Collapse Load Determination, Location 1, Vertical Drop

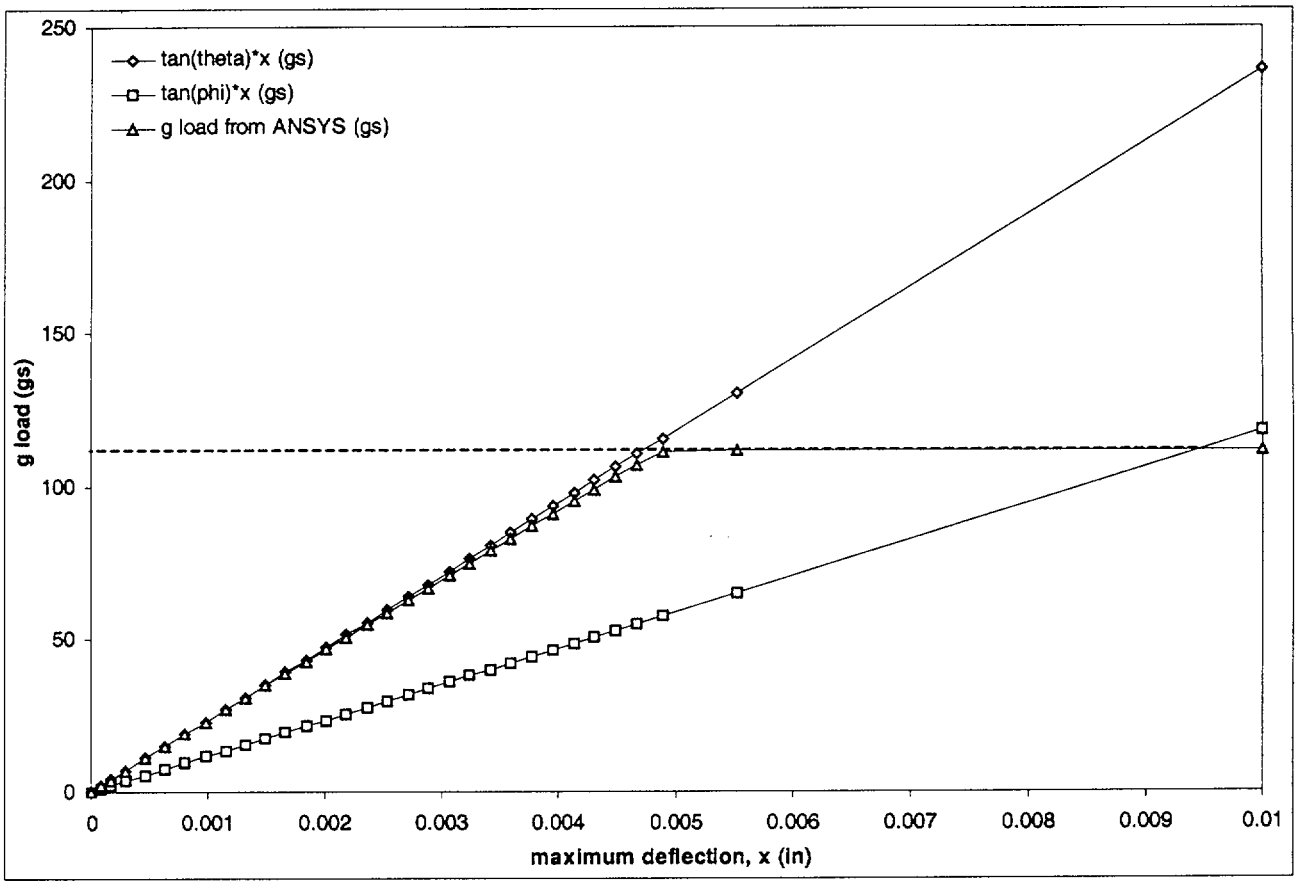

Figure 2.10.3-53
Allowable Collapse Load Determination, Location 1, 30° Drop

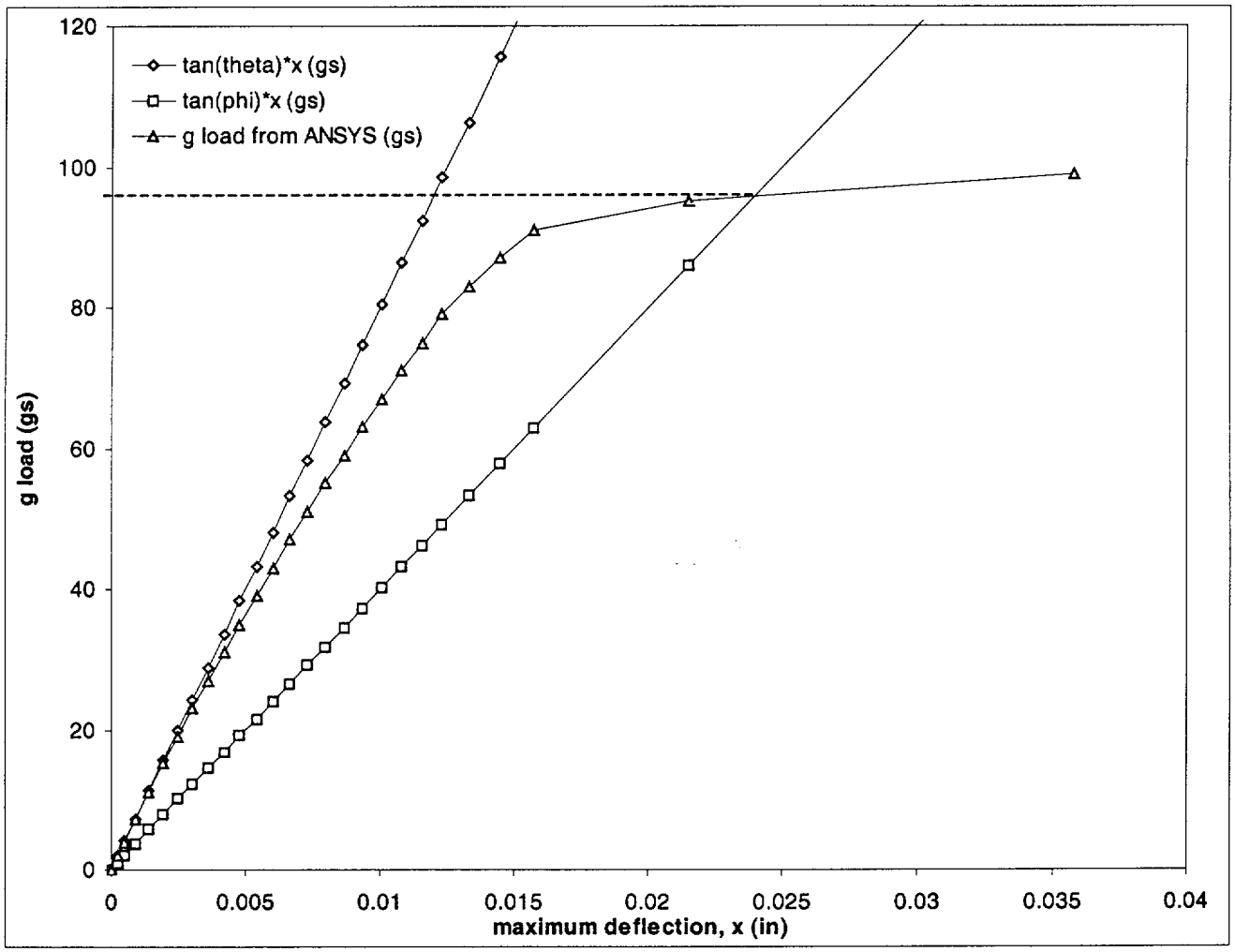

Figure 2.10.3-54
Allowable Collapse Load Determination, Location 1, 45° Drop

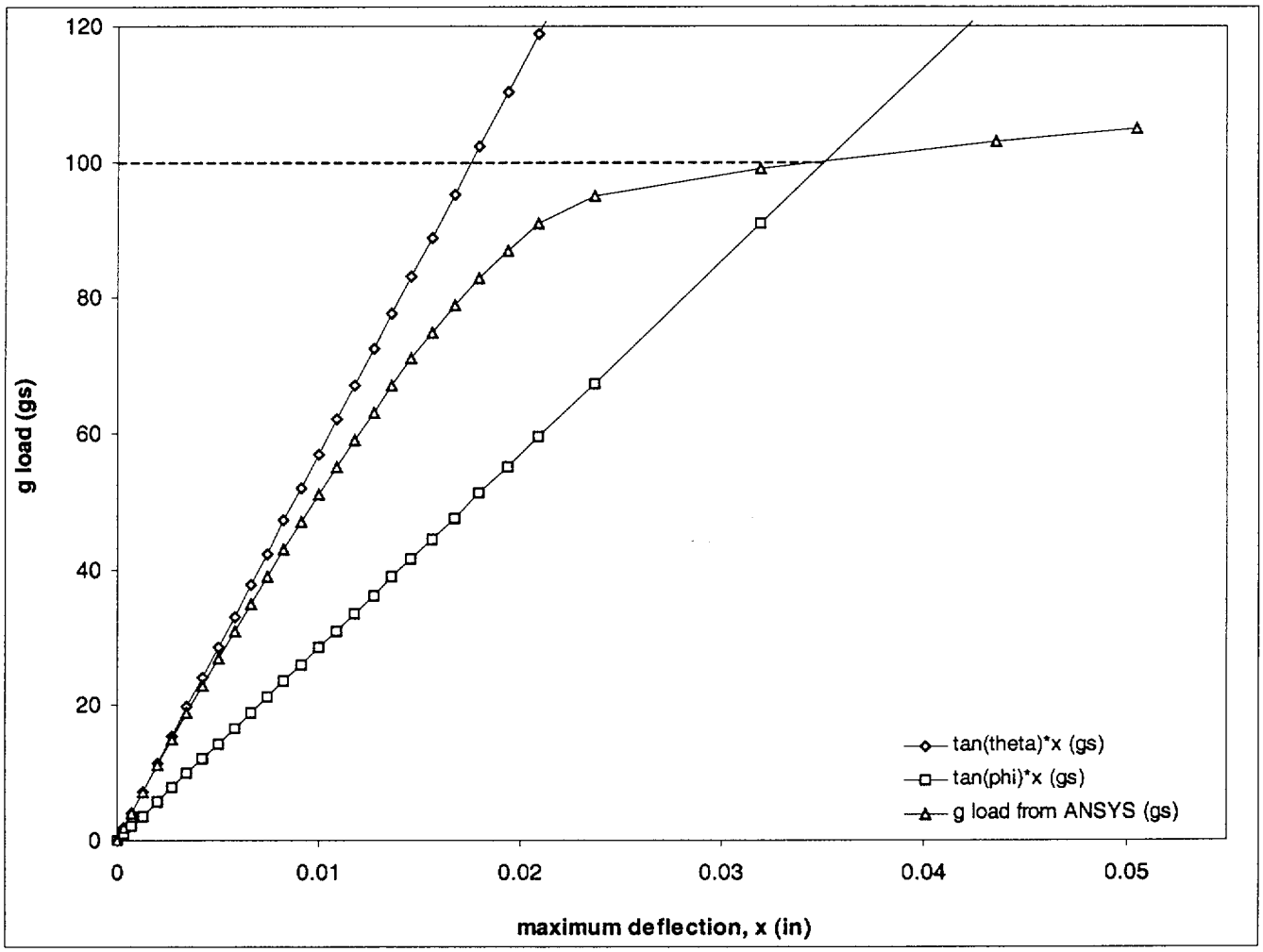

Figure 2.10.3-55
Allowable Collapse Load Determination, Location 2, Vertical Drop

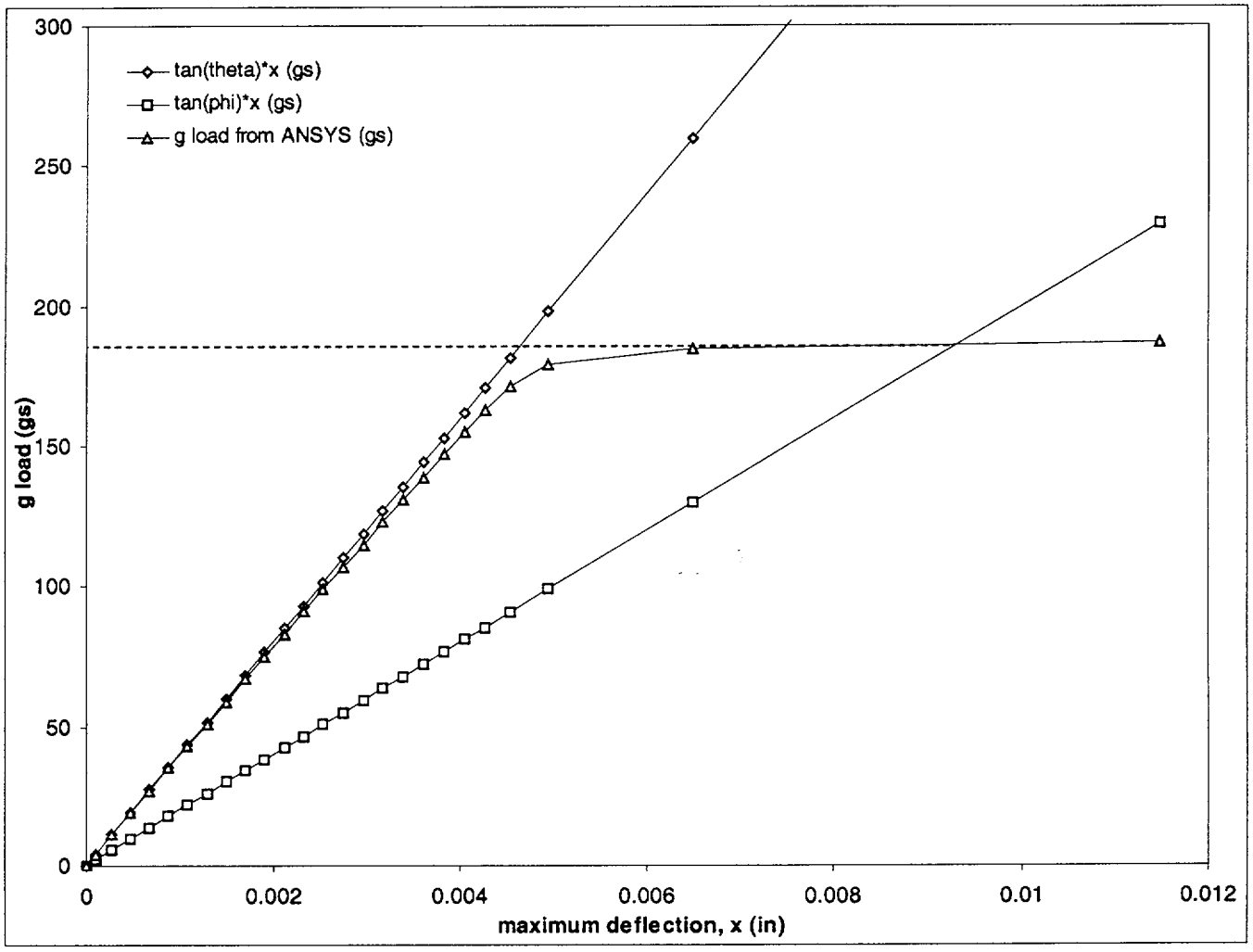

Figure 2.10.3-56
Allowable Collapse Load Determination, Location 2, 30° Drop

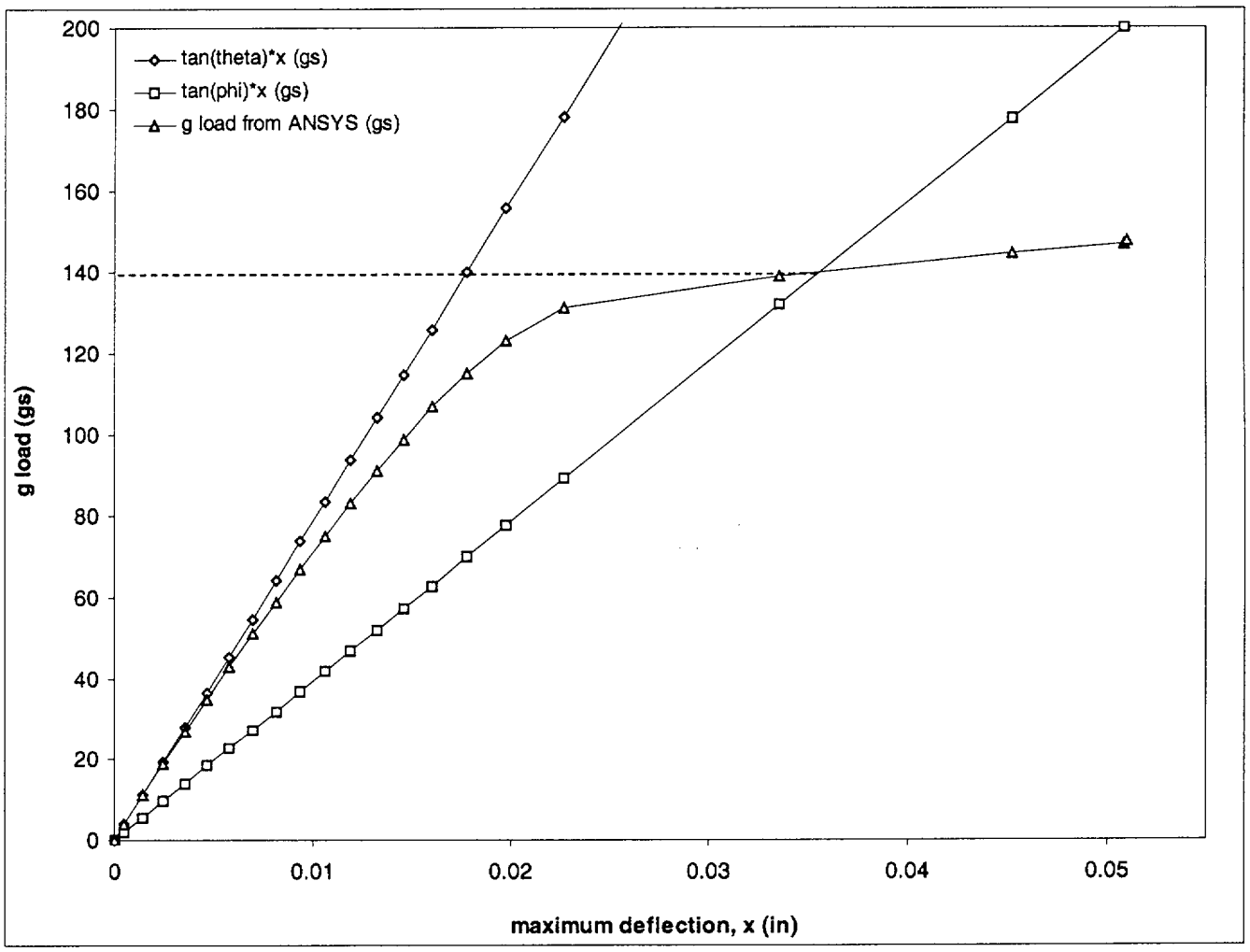

Figure 2.10.3-57
Allowable Collapse Load Determination, Location 2, 45° Drop

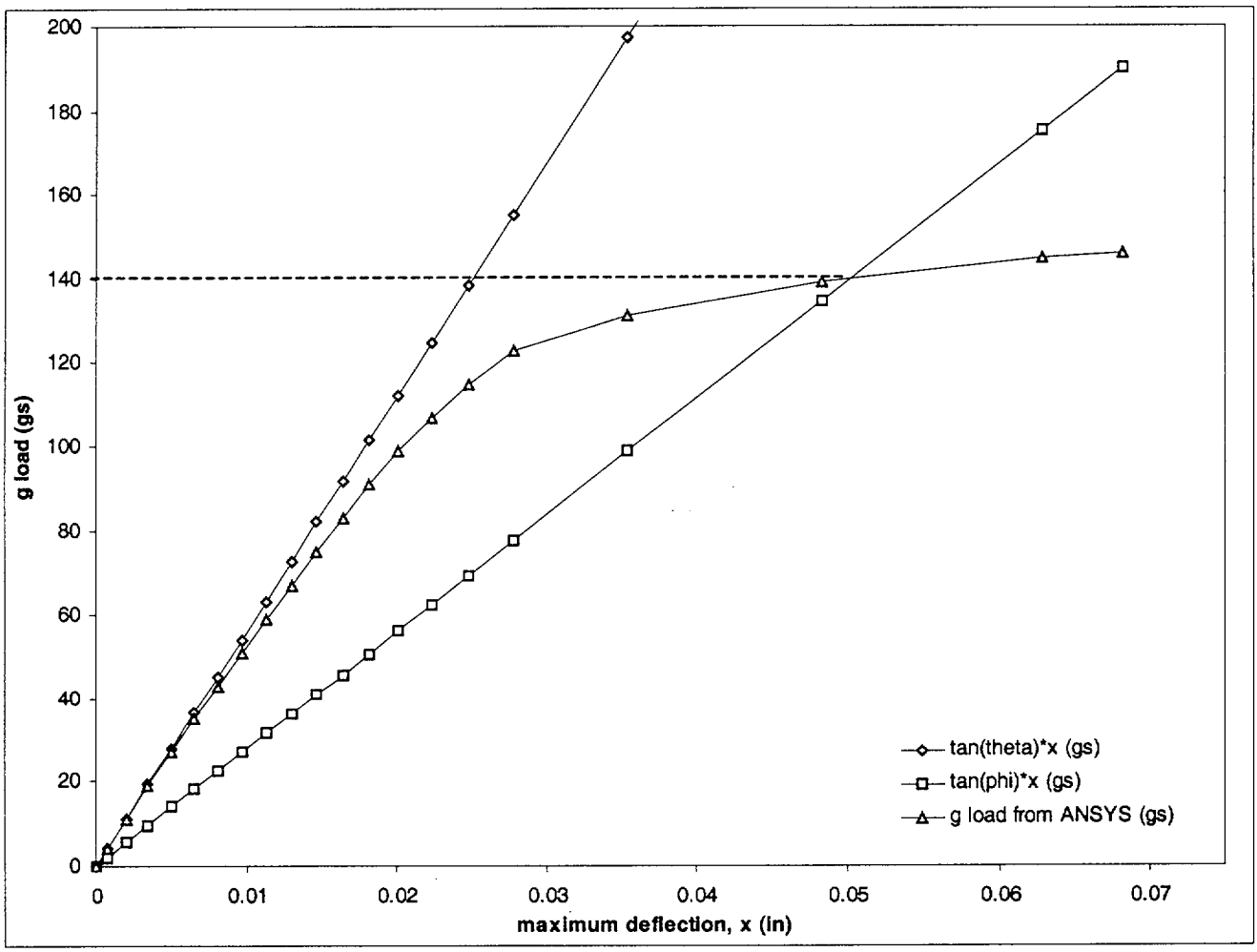

Figure 2.10.3-58
Support Rail Type 1 Location

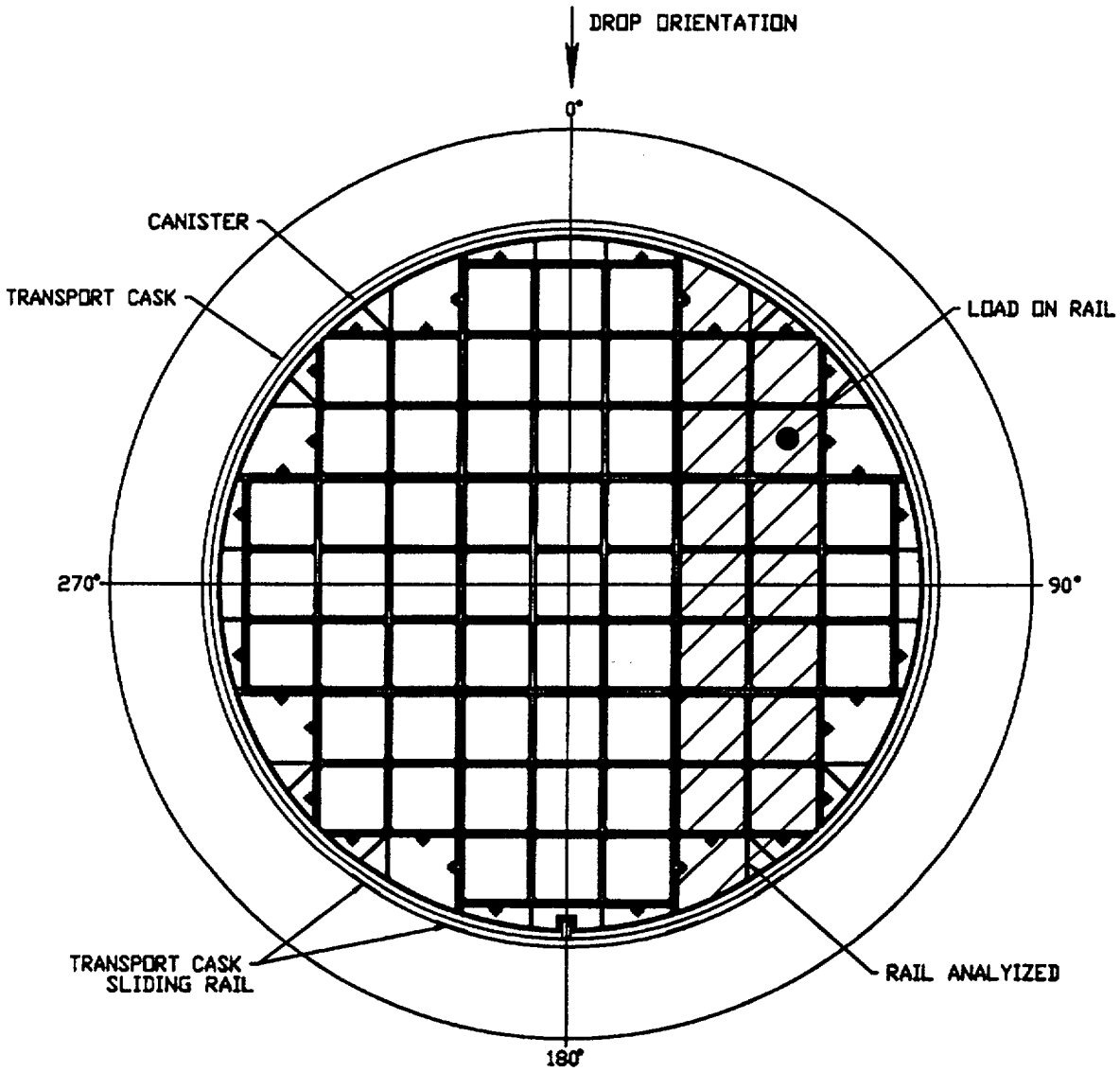

NUHOMS - 61B RAIL BUCKLING EVALUATION

Figure 2.10.3-59
Support Rail Type 1 Finite Element Model with Boundary Conditions

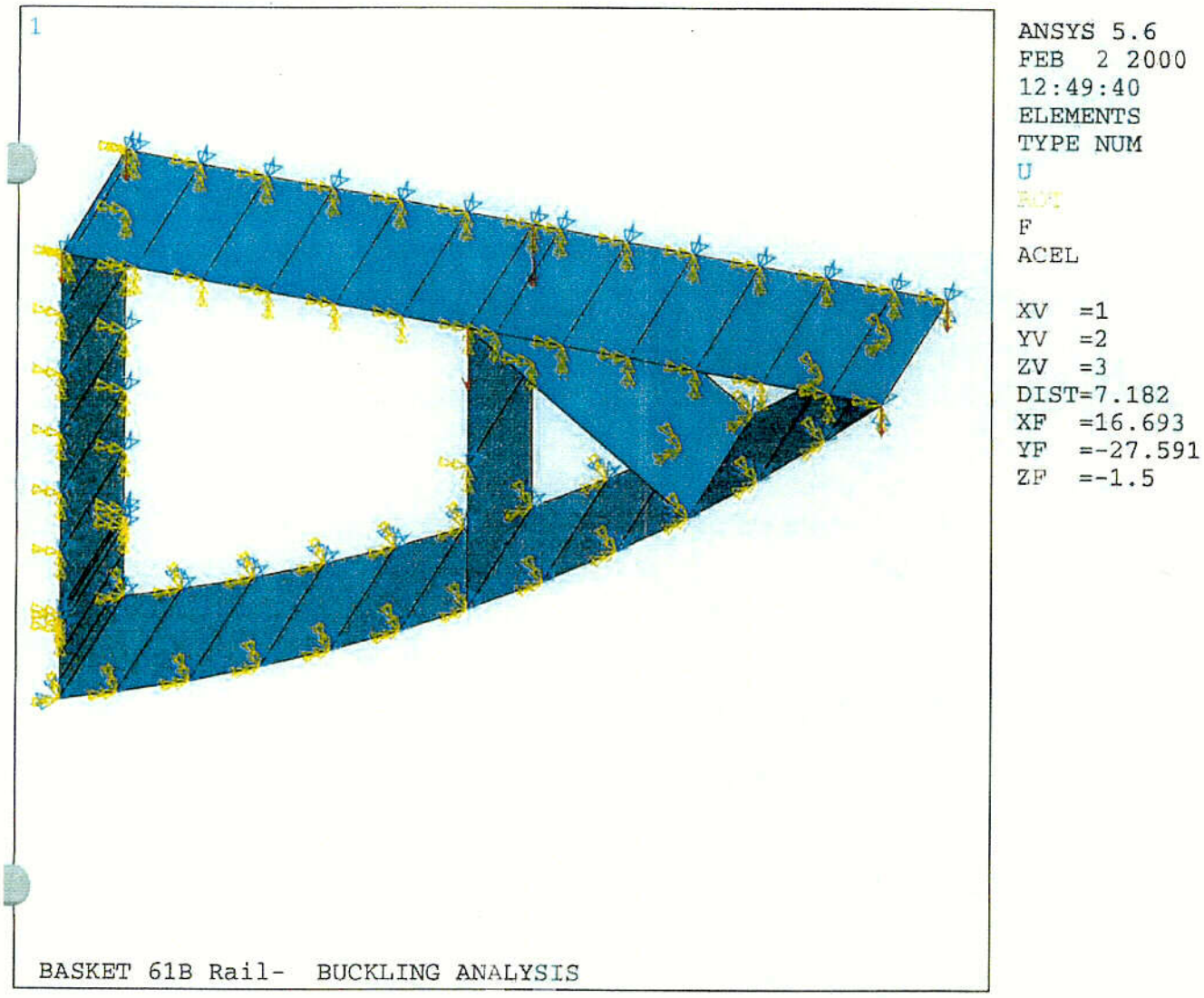

C 20

Figure 2.10.3-60
NUHOMS 61B Basket Rail Buckling Analysis, Case 1

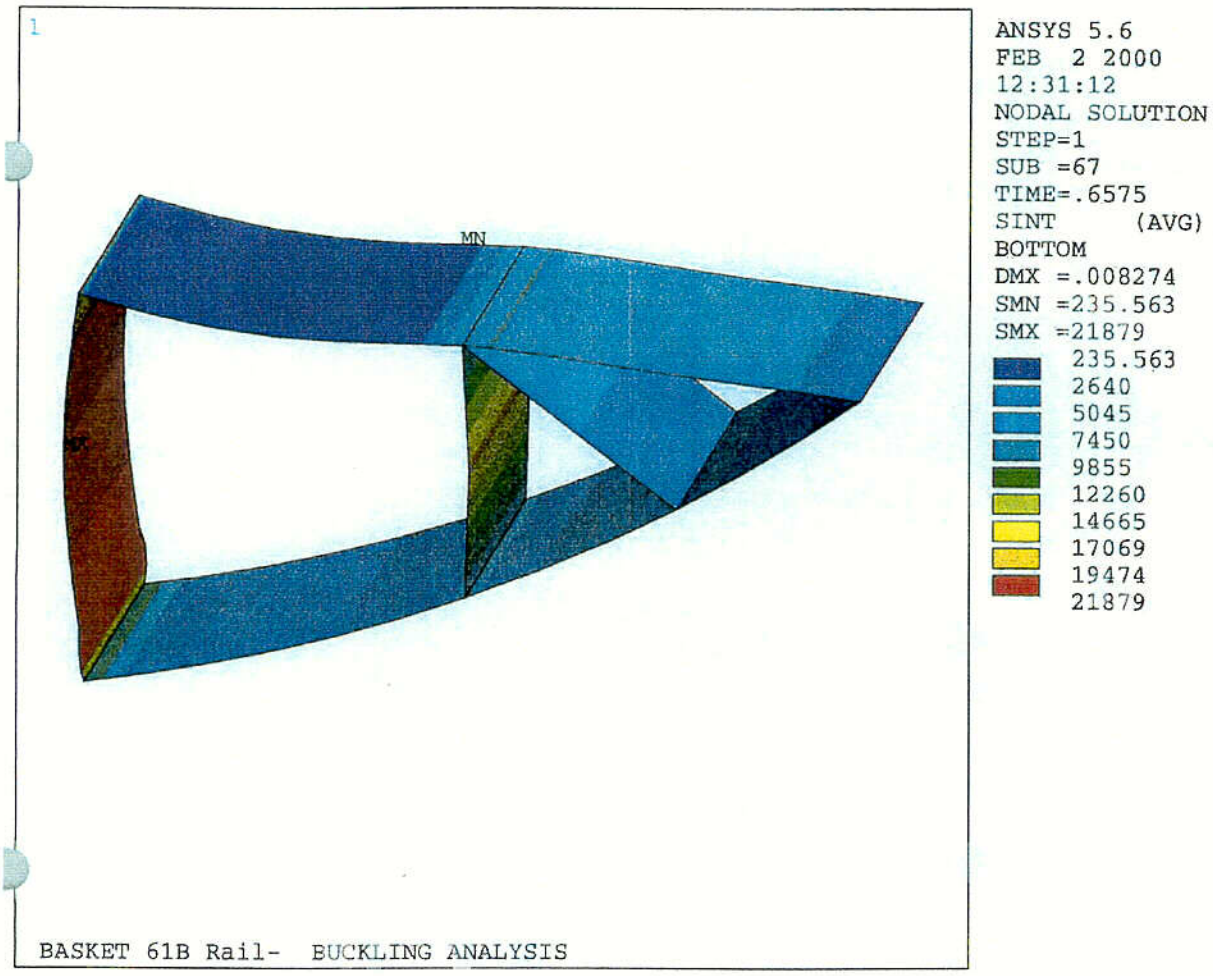

C21

Figure 2.10.3-61
NUHOMS 61B Basket Rail Buckling Analysis, Case 2

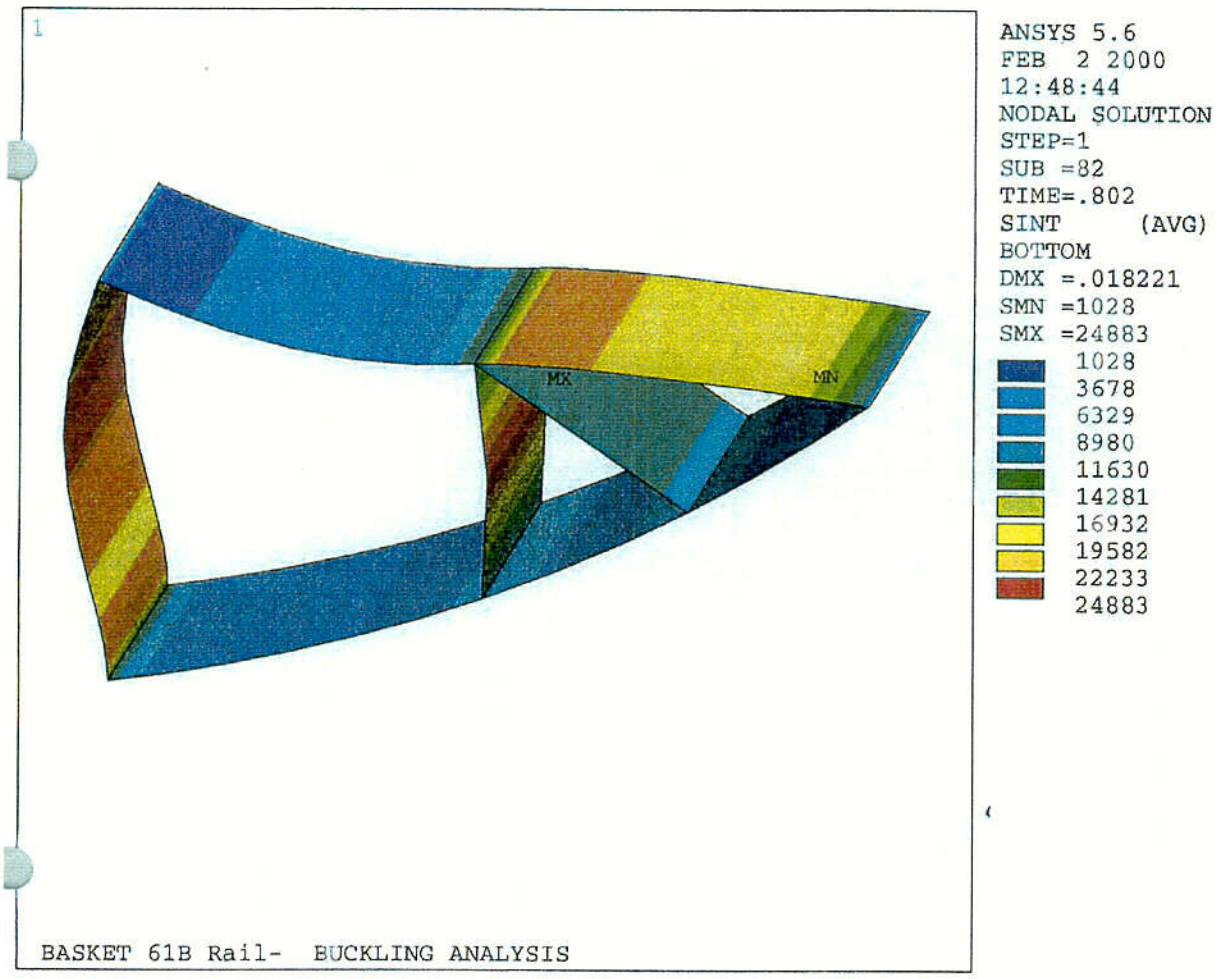

C22

Figure 2.10.3-62
Support Rail Type 1 Allowable Collapse Load Determination

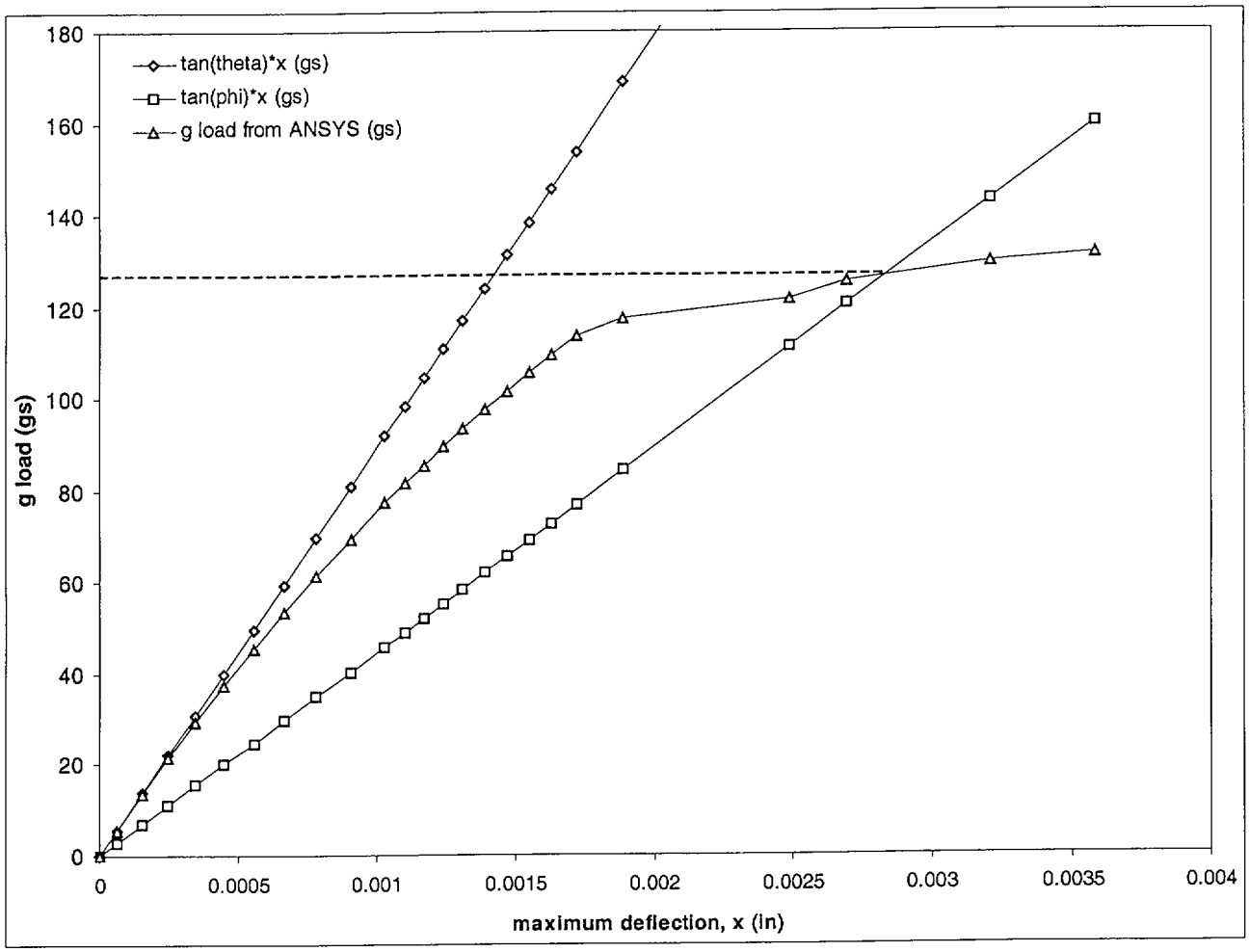

Figure 2.10.3-63
NUHOMS-61B Canister 2-Dimensional Finite Element Model

C23

Figure 2.10.3-64
NUHOMS-61B Canister 2-Dimensional Finite Element Model,
Including Nodal Couplings and Front End Drop Boundary Conditions, Front Closure

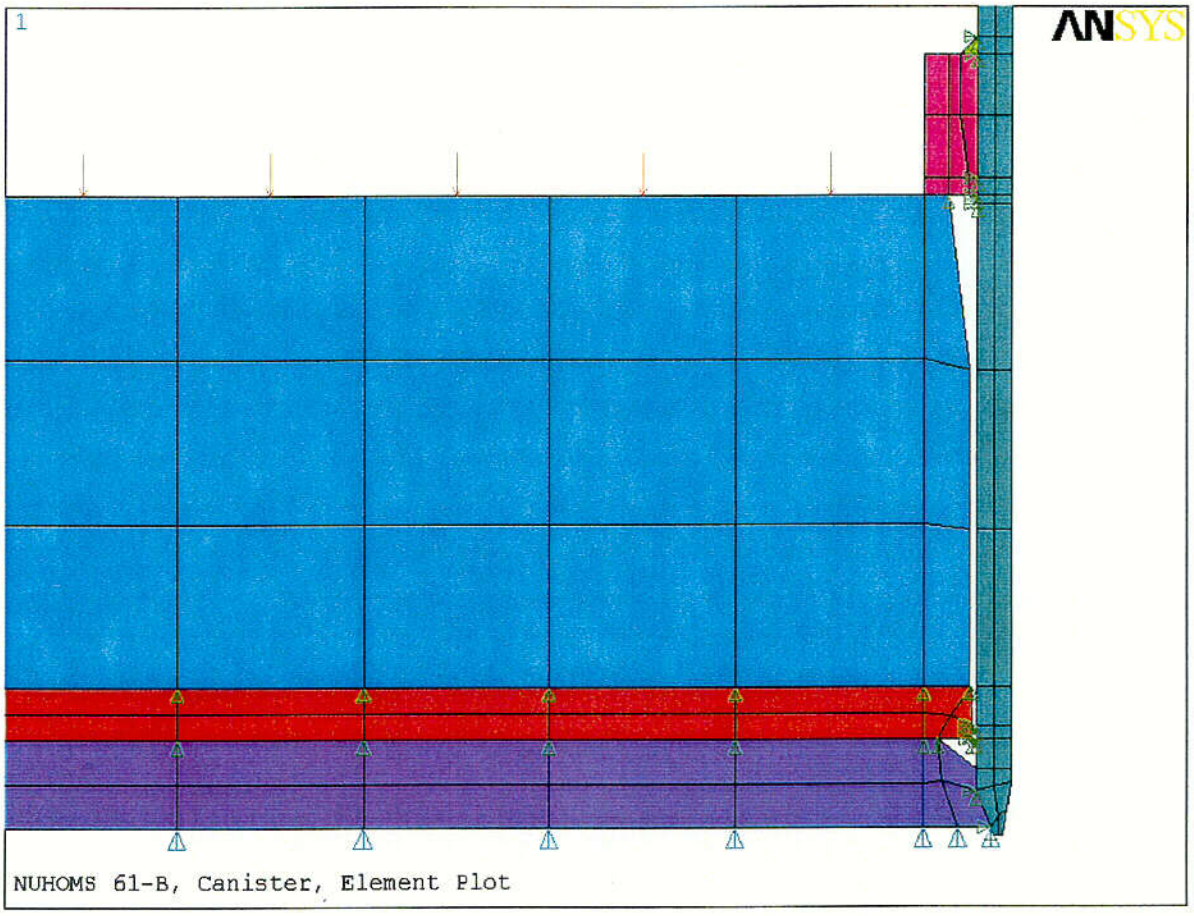

C24

Figure 2.10.3-65
NUHOMS-61B Canister 2-Dimensional Finite Element Model,
Including Nodal Couplings and Front End Drop Boundary Conditions, Rear Closure

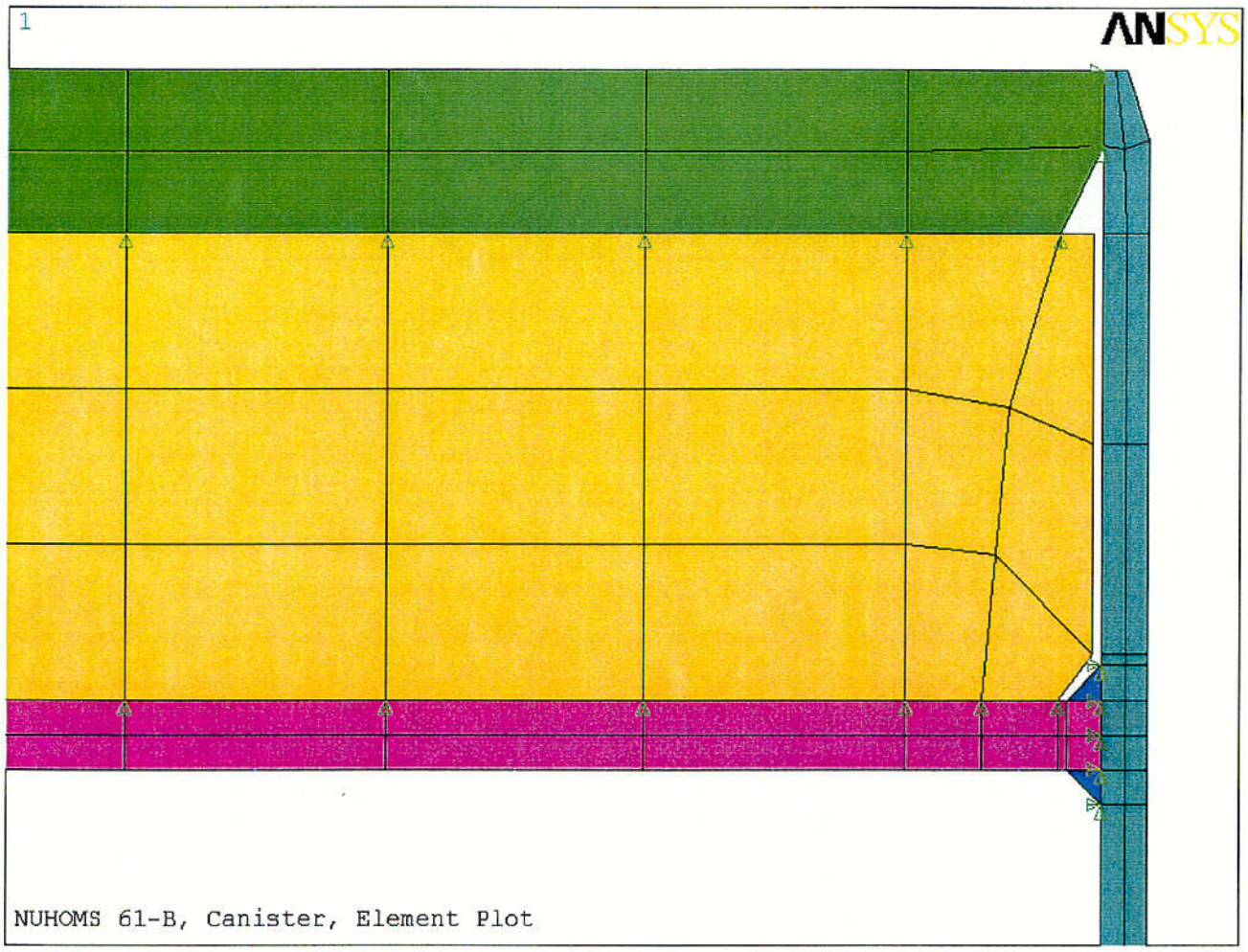

C25