CONTENTS

2. 204000K5.08 001

Unit 1 is at 100% RTP. The I & C Techs have just completed the quarterly functional surveillance for the RWCU Area High Temperature isolation instruments. The foreman is reviewing the paperwork and notes that isolation setpoints for all the areas were set to 155°F. He immediately notifies the Shift Supervisor.

Which ONE of the following describes the determination the Shift Supervisor should make? (Provide TS Section 3.3.6.1 and Table 3.3.6.1-1)

A. This is not a problem because the setpoint per Tech Specs is ≤ 160°F.

B. This is a problem and all of the instruments are INOPERABLE. The RWCU system isolation capability must be restored within 1 hour.

C. This is a problem and all of the instruments are INOPERABLE. Each channel must be placed in the tripped condition within 12 hours of INOPERABILITY.

D. This is not a problem if the I & C Techs can recalibrate the instruments within tolerance provided the surveillance frequency hasn't expired.

References: Tech Spec section 3.3.6.1
Tech Spec Table 3.3.6.1-1
Tech Spec Bases B.3.3.6.1

A. Incorrect since the Tech Spec setpoint is ≤ 150 F.

B. Correct answer since isolation capability is not maintained since all channels are inoperable.

C. Incorrect since isolation capability is not maintained per Bases definition.

D. Incorrect since the instruments should be declared INOPERABLE immediately.

RO Tier:		SRO Tier:	T2G2
Keyword:	RWCU ISOLATION	Cog Level:	C/A 2.6/2.6
Source:	N	Exam:	HT02301
Test:	S	Misc:	TCK

30. 204000K5.08 001

Unit 1 is at 100% RTP. The I & C Techs have just completed the quarterly functional surveillance for the RWCU Area High Temperature isolation instruments. The foreman is reviewing the paperwork and notes that isolation setpoints for all the areas were set to 155°F. He immediately notifies the Shift Supervisor.

Which ONE of the following describes the determination the Shift Supervisor should make? (Provide TS Section 3.3.6.1 and Table 3.3.6.1-1)

A. This is not a problem because the setpoint per Tech Specs is ≤ 160°F.

B. ✓ This is a problem and all of the instruments are INOPERABLE. The RWCU system isolation capability must be restored within 1 hour.

C. This is a problem and all of the instruments are INOPERABLE. Each channel must be placed in the tripped condition within 24 hours of INOPERABILITY.

D. This is not a problem if the I & C Techs can recalibrate the instruments within tolerance provided the surveillance frequency hasn't expired.

References: Tech Spec section 3.3.6.1
Tech Spec Table 3.3.6.1-1
Tech Spec Bases B.3.3.6.1

A. Incorrect since the Tech Spec setpoint is ≤ 150 F.

B. Correct answer since isolation capability is not maintained since all channels are inoperable.

C. Incorrect since isolation capability is not maintained per Bases definition.

D. Incorrect since the instruments should be declared INOPERABLE immediately.

RO Tier:		SRO Tier:	T2G2
Keyword:	RWCU ISOLATION	Cog Level:	C/A 2.6/2.6
Source:	N	Exam:	HT02301
Test:	S	Misc:	TCK

8. 204000K5.08 001

Unit 1 is at 100% RTP. The Instrument Maintenance Techs have just completed the quarterly functional surveillance for the RWCU Area High Temperature isolation instruments. The foreman is reviewing the paperwork and notes that isolation setpoints for all the areas were set to 155°F. He immediately notifies the Shift Supervisor.

Which ONE of the following describes the determination theShift Supervisor should make?

A. This is not a problem because the setpoint per Tech Specs is ≤ 160°F.

B. This is a problem and all of the instruments are INOPERABLE. The RWCU system isolation capability must be restored within 1 hour.

C. This is a problem and all of the instruments are INOPERABLE. At least one channel must be placed in the tripped condition within 12 hours.

D. This is not a problem if the Instrument Techs can recalibrate the instruments within tolerance provided the surveillance frequency hasn't expired.

References: Tech Spec section 3.3.6.1
Tech Spec Table 3.3.6.1-1
Tech Spec Bases B.3.3.6.1

A. Incorrect since the Tech Spec setpoint is ≤ 150 F.

B. Correct answer. Isolation capability is not maintained because no channels are OPERABLE and none are in trip at this time.

C. Incorrect since Condition A allows 24 hours to place a channel in trip.

D. Incorrect since the instruments should be declared INOPERABLE immediately.

RO Tier:		SRO Tier:	T2G2
Keyword:	RWCU ISOLATION	Cog Level:	C/A 2.6/2.6
Source:	N	Exam:	HT02301
Test:	S	Misc:	TCK

QUESTIONS REPORT
for HT2002

1. 204000K5.08 001

Unit 1 is at 100% RTP. The Instrument Maintenance Techs have just completed the quarterly functional surveillance for the RWCU Area High Temperature isolation instruments. The foreman is reviewing the paperwork and notes that isolation setpoints for all the areas were set to 155°F. He notifies the Shift Supervisor immediately.

Which ONE of the following describes the determination theShift Supervisor should make?

A. This is not a problem because the setpoint per Tech Specs is ≤ 160°F.

B. This is a problem and all of the instruments are INOPERABLE. The RWCU system isolation capability must be restored within 1 hour.

C. This is a problem and all of the instruments are INOPERABLE. At least one channel must be placed in the tripped condition within 12 hours.

D. This is not a problem if the Instrument Techs can recalibrate the instruments within tolerance provided the surveillance frequency hasn't expired.

References: Tech Spec section 3.3.6.1
Tech Spec Table 3.3.6.1-1
Tech Spec Bases B.3.3.6.1

A. Incorrect since the Tech Spec setpoint is ≤ 150 F.

B. Correct answer. Isolation capability is not maintained because no channels are OPERABLE and none are in trip at this time.

C. Incorrect since Condition A allows 24 hours to place a channel in trip.

D. Incorrect since the instruments should be declared INOPERABLE immediately.

Table 3.3.6.1-1 (page 4 of 4)
Primary Containment Isolation Instrumentation

FUNCTION	APPLICABLE MODES OR OTHER SPECIFIED CONDITIONS	REQUIRED CHANNELS PER TRIP SYSTEM	CONDITIONS REFERENCED FROM REQUIRED ACTION C.1	SURVEILLANCE REQUIREMENTS	ALLOWABLE VALUE
4. RCIC System Isolation (continued)					
g. RCIC Suppression Pool Area Differential Temperature – High	1,2,3	1	F	SR 3.3.6.1.1 SR 3.3.6.1.2 SR 3.3.6.1.5 SR 3.3.6.1.6	≤ 42°F
h. Emergency Area Cooler Temperature – High	1,2,3	1	F	SR 3.3.6.1.1 SR 3.3.6.1.2 SR 3.3.6.1.5 SR 3.3.6.1.6	≤ 169°F
5. RWCU System Isolation					
a. Area Temperature – High	1,2,3	1 per area	F	SR 3.3.6.1.1 SR 3.3.6.1.2 SR 3.3.6.1.5 SR 3.3.6.1.6	≤ 150°F
b. Area Ventilation Differential Temperature – High	1,2,3	1 per area	F	SR 3.3.6.1.1 SR 3.3.6.1.2 SR 3.3.6.1.5 SR 3.3.6.1.6	≤ 67°F
c. SLC System Initiation	1,2	1(c)	H	SR 3.3.6.1.6	NA
d. Reactor Vessel Water Level – Low Low, Level 2	1,2,3	2	F	SR 3.3.6.1.1 SR 3.3.6.1.2 SR 3.3.6.1.5 SR 3.3.6.1.6	≥ -47 inches
6. RHR Shutdown Cooling System Isolation					
a. Reactor Steam Dome Pressure – High	1,2,3	1	F	SR 3.3.6.1.1 SR 3.3.6.1.2 SR 3.3.6.1.5 SR 3.3.6.1.6	≤ 145 psig
b. Reactor Vessel Water Level – Low, Level 3	3,4,5	2(d)	I	SR 3.3.6.1.1 SR 3.3.6.1.2 SR 3.3.6.1.5 SR 3.3.6.1.6	≥ 0 inches

(c) SLC System Initiation only inputs into one of the two trip systems.

(d) Only one trip system required in MODES 4 and 5 when RHR Shutdown Cooling System integrity maintained.

3.3 INSTRUMENTATION

3.3.6.1 Primary Containment Isolation Instrumentation

LCO 3.3.6.1 The primary containment isolation instrumentation for each Function in Table 3.3.6.1-1 shall be OPERABLE.

APPLICABILITY: According to Table 3.3.6.1-1.

ACTIONS

----------NOTE----------
Separate Condition entry is allowed for each channel.

CONDITION	REQUIRED ACTION	COMPLETION TIME
A. One or more required channels inoperable.	A.1 Place channel in trip.	12 hours for Functions 2.a, 2.b, and 6.b AND 24 hours for Functions other than Functions 2.a, 2.b, and 6.b
B. ---------NOTE--------- Not applicable for Function 5.c. ---------- One or more automatic Functions with isolation capability not maintained.	B.1 Restore isolation capability.	1 hour

(continued)

BASES

ACTIONS

A.1 (continued)

the channel in trip (e.g., as in the case where placing the inoperable channel in trip would result in an isolation), Condition C must be entered and its Required Action taken.

B.1

Required Action B.1 is intended to ensure that appropriate actions are taken if multiple, inoperable, untripped channels within the same Function result in automatic isolation capability being lost for the associated penetration flow path(s). The MSL Isolation Functions are considered to be maintaining isolation capability when sufficient channels are OPERABLE or in trip, such that both trip systems will generate a trip signal from the given Function on a valid signal. The other isolation functions are considered to be maintaining isolation capability when sufficient channels are OPERABLE or in trip, such that one trip system will generate a trip signal from the given Function on a valid signal. This ensures that one of the two PCIVs in the associated penetration flow path can receive an isolation signal from the given Function. As noted, this Condition is not applicable for Function 5.c (SLC System Initiation), since the loss of the single channel results in a loss of the Function (one-out-of-one logic). This loss was considered during the development of Reference 5 and considered acceptable for the 24 hours allowed by Required Action A.1.

The Completion Time is intended to allow the operator time to evaluate and repair any discovered inoperabilities. The 1 hour Completion Time is acceptable because it minimizes risk while allowing time for restoration or tripping of channels.

C.1

Required Action C.1 directs entry into the appropriate Condition referenced in Table 3.3.6.1-1. The applicable Condition specified in Table 3.3.6.1-1 is Function and MODE or other specified condition dependent and may change as the Required Action of a previous Condition is completed.

(continued)

9. 205000G2.1.22 001

Unit 2 is shutting down for a maintenance outage due to the failure of the "B" Recirc pump which is out-of-service electrically. At 0100 on 4/12/02 reactor pressure went below 145 psig and reactor temperature went below 300°F. The following conditions exist at 0400 on 4/12/02:

Reactor pressure	130 psig
Reactor temperature	285°F
Mode Switch position	S/D

At 0415 on 4/12/02 the "A" Recirc pump tripped and cannot be restarted due to bus overcurrent.

Which ONE of the following is required to be taken per Tech Specs?
(Provide copy of Tech Spec sections 3.3.6.1, 3.4.1, 3.4.7)

A. No action is required to be taken since Recirc Pumps are only required to be in operation in Modes 1 and 2.

B. Initiate action to place Shutdown Cooling in operation within 1 hour AND monitor reactor coolant temperature and pressure once per hour.

C. Initiate action to restore Shutdown Cooling to OPERABLE status immediately AND verify reactor coolant circulation by an alternate method within 1 hour from discovery of no reactor coolant circulation AND be in Mode 4 in 24 hours.

D. No action is required for up 2 hours at which time a Recirc Pump must be running or Shutdown Cooling must be in operation.

References: Tech Spec section 3.3.6.1, Primary Containment Isol Instrument
Tech Spec section 3.4.1, Recirc Loops Operating
Tech Spec section 3.4.7, RHR Shutdown Cooling

A. Incorrect since Reactor Coolant circulation is required in Mode 3 by Shutdown Cooling or Recirc Pumps.

B. Incorrect since 3.4.7 requires action to place Shutdown Cooling or a Recirc Pump in operation IMMEDIATELY provided NOTE 1 of the LCO is not used or expired.

C. Incorrect since these are the actions to take if Shutdown Cooling is INOPERABLE. At this time Shutdown Cooling is OPERABLE since reactor pressure is below the Shutdown Cooling low pressure permissive.

D. Correct answer.

RO Tier:		SRO Tier:	T2G2
Keyword:	SHUTDOWN COOLING	Cog Level:	C/A 2.8/3.3
Source:	N	Exam:	HT02301
Test:	S	Misc:	TCK

QUESTIONS REPORT
for HT2002

1. 205000G2.1.22 001

Unit 2 is shutting down for a maintenance outage due to the failure of the "B" Recirc pump which is out-of-service electrically. At 0100 on 4/12/02 reactor pressure went below 145 psig and reactor temperature went below 300 F. The following conditions exist at 0400 on 4/12/02:

Reactor pressure	130 psig
Reactor temperature	285 F
Mode Switch position	S/D

At 0415 on 4/12/02 the "A" Recirc pump tripped and cannot be restarted due to bus overcurrent. What action is required to be taken per Tech Specs?

A. No action is required to be taken since Recirc Pumps are only required to be in operation in Modes 1 and 2.

B. Initiate action to place Shutdown Cooling in operation within 1 hour AND monitor reactor coolant temperature and pressure once per hour.

C. Initiate action to restore Shutdown Cooling to OPERABLE status immediately AND verify reactor coolant circulation by an alternate method within 1 hour from discovery of no reactor coolant circulation AND be in Mode 4 in 24 hours.

D. No action is required for up 2 hours at which time a Recirc Pump must be running or Shutdown Cooling must be in operation.

References: Tech Spec section 3.3.6.1, Primary Containment Isol Instrument
Tech Spec section 3.4.1, Recirc Loops Operating
Tech Spec section 3.4.7, RHR Shutdown Cooling

A. Incorrect since Reactor Coolant circulation is required in Mode 3 by Shutdown Cooling or Recirc Pumps.

B. Incorrect since 3.4.7 requires action to place Shutdown Cooling or a Recirc Pump in operation IMMEDIATELY provided NOTE 1 of the LCO is not used or expired.

C. Incorrect since these are the actions to take if Shutdown Cooling is INOPERABLE. At this time Shutdown Cooling is OPERABLE since reactor pressure is below the Shutdown Cooling low pressure permissive.

D. Correct answer.

Table 3.3.6.1-1 (page 4 of 4)
Primary Containment Isolation Instrumentation

FUNCTION	APPLICABLE MODES OR OTHER SPECIFIED CONDITIONS	REQUIRED CHANNELS PER TRIP SYSTEM	CONDITIONS REFERENCED FROM REQUIRED ACTION C.1	SURVEILLANCE REQUIREMENTS	ALLOWABLE VALUE
4. RCIC System Isolation (continued)					
g. RCIC Suppression Pool Area Differential Temperature – High	1,2,3	1	F	SR 3.3.6.1.1 SR 3.3.6.1.2 SR 3.3.6.1.5 SR 3.3.6.1.6	≤ 42°F
h. Emergency Area Cooler Temperature – High	1,2,3	1	F	SR 3.3.6.1.1 SR 3.3.6.1.2 SR 3.3.6.1.5 SR 3.3.6.1.6	≤ 169°F
5. RWCU System Isolation					
a. Area Temperature – High	1,2,3	1 per area	F	SR 3.3.6.1.1 SR 3.3.6.1.2 SR 3.3.6.1.5 SR 3.3.6.1.6	≤ 150°F
b. Area Ventilation Differential Temperature – High	1,2,3	1 per area	F	SR 3.3.6.1.1 SR 3.3.6.1.2 SR 3.3.6.1.5 SR 3.3.6.1.6	≤ 67°F
c. SLC System Initiation	1,2	1(c)	H	SR 3.3.6.1.6	NA
d. Reactor Vessel Water Level – Low Low, Level 2	1,2,3	2	F	SR 3.3.6.1.1 SR 3.3.6.1.2 SR 3.3.6.1.5 SR 3.3.6.1.6	≥ -47 inches
6. RHR Shutdown Cooling System Isolation					
a. Reactor Steam Dome Pressure – High	1,2,3	1	F	SR 3.3.6.1.1 SR 3.3.6.1.2 SR 3.3.6.1.5 SR 3.3.6.1.6	≤ 145 psig
b. Reactor Vessel Water Level – Low, Level 3	3,4,5	2(d)	I	SR 3.3.6.1.1 SR 3.3.6.1.2 SR 3.3.6.1.5 SR 3.3.6.1.6	≥ 0 inches

(c) SLC System Initiation only inputs into one of the two trip systems.

(d) Only one trip system required in MODES 4 and 5 when RHR Shutdown Cooling System integrity maintained.

3.4 REACTOR COOLANT SYSTEM (RCS)

3.4.1 Recirculation Loops Operating

LCO 3.4.1 Two recirculation loops with matched flows shall be in operation,

OR

One recirculation loop shall be in operation with the following limits applied when the associated LCO is applicable:

a. LCO 3.2.1, "AVERAGE PLANAR LINEAR HEAT GENERATION RATE (APLHGR)," single loop operation limits specified in the COLR;

b. LCO 3.2.2, "MINIMUM CRITICAL POWER RATIO (MCPR)," single loop operation limits specified in the COLR; and

c. LCO 3.3.1.1, "Reactor Protection System (RPS) Instrumentation," Function 2.b (Average Power Range Monitor Simulated Thermal Power — High), Allowable Value of Table 3.3.1.1-1 is reset for single loop operation.

APPLICABILITY: MODES 1 and 2.

3.4 REACTOR COOLANT SYSTEM (RCS)

3.4.7 Residual Heat Removal (RHR) Shutdown Cooling System — Hot Shutdown

LCO 3.4.7 Two RHR shutdown cooling subsystems shall be OPERABLE and, with no recirculation pump in operation, at least one RHR shutdown cooling subsystem shall be in operation.

----------NOTES----------

1. Both RHR shutdown cooling subsystems and recirculation pumps may be removed from operation for up to 2 hours per 8 hour period.

2. One RHR shutdown cooling subsystem may be inoperable for up to 2 hours for performance of Surveillances.

APPLICABILITY: MODE 3 with reactor steam dome pressure less than the RHR low pressure permissive pressure.

ACTIONS

----------NOTES----------

1. LCO 3.0.4 is not applicable.

2. Separate Condition entry is allowed for each RHR shutdown cooling subsystem.

CONDITION	REQUIRED ACTION	COMPLETION TIME
A. One or two RHR shutdown cooling subsystems inoperable.	A.1 Initiate action to restore RHR shutdown cooling subsystem(s) to OPERABLE status. AND	Immediately (continued)

ACTIONS

CONDITION	REQUIRED ACTION		COMPLETION TIME
A. (continued)	A.2	Verify an alternate method of decay heat removal is available for each inoperable RHR shutdown cooling subsystem.	1 hour
	AND		
	A.3	Be in MODE 4.	24 hours
B. No RHR shutdown cooling subsystem in operation. AND No recirculation pump in operation.	B.1	Initiate action to restore one RHR shutdown cooling subsystem or one recirculation pump to operation.	Immediately
	AND		
	B.2	Verify reactor coolant circulation by an alternate method.	1 hour from discovery of no reactor coolant circulation AND Once per 12 hours thereafter
	AND		
	B.3	Monitor reactor coolant temperature and pressure.	Once per hour

3. 206000K5.08 001

Unit 1 is operating at 100% RTP. The HPCI isolation valves are being stroked and timed per the Inservice Testing program when MO 1E41-F111 HPCI Vacuum Breaker Isolation Valve failed to close. The Shift Supervisor directed HPCI Vacuum Breaker Isolation Valve MO 1E41-F104 to be closed and deactivated.

Which ONE of the following describes the time limit for deactivating MO 1E41-F104 per Tech Specs and the effect on the HPCI system after the action(s) is/are taken? (Provide Tech Spec section 3.6.1.3)

A. Actions must be taken within 1 hour. HPCI should be declared INOP and a 14 day LCO entered per TS 3.5.1.C.

B. Actions must be taken within 4 hours. HPCI should be declared INOP and a 14 day LCO entered per TS 3.5.1.C.

C. Actions must be taken within 1 hour. HPCI system should still be considered OPERABLE because it can still perform its safety function.

D. Actions must be taken within 4 hours. HPCI system should still be considered OPERABLE because it can still perform its safety function.

References: Tech Spec 3.6.1.3 for PCIVs
SI-LP-00501 Rev. 01, LT-00501 Fig. 1
SI-LP-00501 Rev. 01, pg 8 of 46

A. Incorrect since the actions for Tech Spec 3.6.1.3 is 4 hours to isolate the line since there is more than 1 PCIV in the penetration flow path and only 1 valve is INOPERABLE. Also, HPCI can still perform its function and should still be considered OPERABLE.

B. Incorrect since HPCI can still perform its function and should still be considered OPERABLE.

C. Incorrect since the actions for Tech Spec 3.6.1.3 is 4 hours to isolate the line since there is more than 1 PCIV in the penetration flow path and only 1 valve is INOPERABLE.

D. Correct answer.

RO Tier:		SRO Tier:	T2G1
Keyword:	HPCI	Cog Level:	C/A 3.0/3.2
Source:	N	Exam:	HT02301
Test:	S	Misc:	TCK

31. 206000K5.08 001

Unit 1 is operating at 100% RTP. The HPCI isolation valves are being stroked and timed per the Inservice Testing program when MO 1E41-F111 HPCI Vacuum Breaker Isolation Valve failed to close. The Shift Supervisor directed HPCI Vacuum Breaker Isolation Valve MO 1E41-F104 to be closed and deactivated.

Which ONE of the following describes the time limit for deactivating MO 1E41-F104 per Tech Specs and the effect on the HPCI system after the action(s) is/are taken? (Provide Tech Spec section 3.6.1.3)

A. Actions must be taken within 1 hour. HPCI should be declared INOP and a 14 day LCO entered per TS 3.5.1.C.

B. Actions must be taken within 4 hours. HPCI should be declared INOP and a 14 day LCO entered per TS 3.5.1.C.

C. Actions must be taken within 1 hour. HPCI system should still be considered OPERABLE because it can still perform its design function.

D. Actions must be taken within 4 hours. HPCI system should still be considered OPERABLE because it can still perform its design function.

References: Tech Spec 3.6.1.3 for PCIVs
SI-LP-00501 Rev. 01, LT-00501 Fig. 1
SI-LP-00501 Rev. 01, pg 8 of 46

A. Incorrect since the actions for Tech Spec 3.6.1.3 is 4 hours to isolate the line since there is more than 1 PCIV in the penetration flow path and only 1 valve is INOPERABLE. Also, HPCI can still perform its function and should still be considered OPERABLE.

B. Incorrect since HPCI can still perform its function and should still be considered OPERABLE.

C. Incorrect since the actions for Tech Spec 3.6.1.3 is 4 hours to isolate the line since there is more than 1 PCIV in the penetration flow path and only 1 valve is INOPERABLE.

D. Correct answer.

RO Tier:		SRO Tier:	T2G1
Keyword:	HPCI	Cog Level:	C/A 3.0/3.2
Source:	N	Exam:	HT02301
Test:	S	Misc:	TCK

12. 206000K5.08 001

Unit 1 is operating at 100% RTP. The HPCI isolation valves are being stroked and timed per the Inservice Testing program when MO F111 HPCI Vacuum Breaker Isolation Valve failed to close. The Shift Supervisor directed HPCI Vacuum Breaker Isolation Valve MO F104 to be closed and deactivated.

Which ONE of the following describes the time limit for deactivating MO F104 per Tech Specs and the effect on the HPCI system after the action(s) is/are taken?
(Provide Tech Spec section 3.6.1.3)

A. Actions must be taken within 1 hour. HPCI should be declared INOP and a 14 day LCO entered per TS 3.5.1.C.

B. Actions must be taken within 4 hours. HPCI should be declared INOP and a 14 day LCO entered per TS 3.5.1.C.

C. Actions must be taken within 1 hour. HPCI system should still be considered OPERABLE because it can still perform its design function.

D. Actions must be taken within 4 hours. HPCI system should still be considered OPERABLE because it can still perform its design function.

References: Tech Spec 3.6.1.3 for PCIVs
SI-LP-00501 Rev. 01, LT-00501 Fig. 1
SI-LP-00501 Rev. 01, pg 8 of 46

A. Incorrect since the actions for Tech Spec 3.6.1.3 is 4 hours to isolate the line since there is more than 1 PCIV in the penetration flow path and only 1 valve is INOPERABLE. Also, HPCI can still perform its function and should still be considered OPERABLE.

B. Incorrect since HPCI can still perform its function and should still be considered OPERABLE.

C. Incorrect since the actions for Tech Spec 3.6.1.3 is 4 hours to isolate the line since there is more than 1 PCIV in the penetration flow path and only 1 valve is INOPERABLE.

D. Correct answer.

RO Tier:		SRO Tier:	T2G1
Keyword:	HPCI	Cog Level:	C/A 3.0/3.2
Source:	N	Exam:	HT02301
Test:	S	Misc:	TCK

3. 206000K5.08 001

Unit 1 is operating at 100% RTP. The HPCI isolation valves are being stroked and timed per the Inservice Testing program when MO F111 HPCI Vacuum Breaker Isolation Valve failed to close. The Shift Supervisor directed HPCI Vacuum Breaker Isolation Valve MO F104 to be closed and deactivated.

Which ONE of the following describes the time limit for deactivating MO F104 per Tech Specs and the effect on the HPCI system after the action(s) is/are taken?
(Provide Tech Spec section 3.6.1.3)

A. HPCI Vacuum Breaker Isolation Valve MO F104 must be closed and deactivated within 1 hour. HPCI should be declared INOP and a 14 day LCO entered per TS 3.5.1.C.

B. HPCI Vacuum Breaker Isolation Valve MO F104 must be closed and deactivated within 4 hours. HPCI should be declared INOP and a 14 day LCO entered per TS 3.5.1.C.

C. HPCI Vacuum Breaker Isolation Valve MO F104 must be closed and deactivated within 1 hour. HPCI system should still be considered OPERABLE because it can still perform its design function.

D. HPCI Vacuum Breaker Isolation Valve MO F104 must be closed and deactivated within 4 hours. HPCI system should still be considered OPERABLE because it can still perform its design function.

References: Tech Spec 3.6.1.3 for PCIVs
SI-LP-00501 Rev. 01, LT-00501 Fig. 1
SI-LP-00501 Rev. 01, pg 8 of 46

A. Incorrect since the actions for Tech Spec 3.6.1.3 is 4 hours to isolate the line since there is more than 1 PCIV in the penetration flow path and only 1 valve is INOPERABLE. Also, HPCI can still perform its function and should still be considered OPERABLE.

B. Incorrect since HPCI can still perform its function and should still be considered OPERABLE.

C. Incorrect since the actions for Tech Spec 3.6.1.3 is 4 hours to isolate the line since there is more than 1 PCIV in the penetration flow path and only 1 valve is INOPERABLE.

D. Correct answer.

QUESTIONS REPORT
for HT2002

1. 206000K5.08 001

Unit 1 is operating at 100% RTP. The HPCI isolation valves are being stroked and timed per the Inservice Testing program when the HPCI Vacuum Breaker Isolation Valve MO F111 failed to close. SELECT the answer that meets the requirements of Tech Specs and indicates the effect on the HPCI system after the action(s) is/are taken?

A. HPCI Vacuum Breaker Isolation Valve MO F104 must be closed and deactivated within 1 hour. HPCI should be declared INOP and a 14 day LCO entered per TS 3.5.1.C.

B. HPCI Vacuum Breaker Isolation Valve MO F104 must be closed and deactivated within 4 hours. HPCI should be declared INOP and a 14 day LCO entered per TS 3.5.1.C.

C. HPCI Vacuum Breaker Isolation Valve MO F104 must be closed and deactivated within 1 hour. HPCI system should still be considered OPERABLE because it can still perform its design function.

D. HPCI Vacuum Breaker Isolation Valve MO F104 must be closed and deactivated within 4 hours. HPCI system should still be considered OPERABLE because it can still perform its design function.

References: Tech Spec 3.6.1.3 for PCIVs
SI-LP-00501 Rev. 01, LT-00501 Fig. 1
SI-LP-00501 Rev. 01, pg 8 of 46

A. Incorrect since the actions for Tech Spec 3.6.1.3 is 4 hours to isolate the line since there is more than 1 PCIV in the penetration flow path and only 1 valve is INOPERABLE. Also, HPCI can still perform its function and should still be considered OPERABLE.

B. Incorrect since HPCI can still perform its function and should still be considered OPERABLE.

C. Incorrect since the actions for Tech Spec 3.6.1.3 is 4 hours to isolate the line since there is more than 1 PCIV in the penetration flow path and only 1 valve is INOPERABLE.

D. Correct answer.

Note: Minimum recommended speed for Turbine operation is 2000 rpm based on maintaining adequate oil pressure for governor operation and bearing lubrication. Above this speed there is also sufficient steam flow through the Turbine to prevent turbine exhaust valve chatter.

8. The Exhaust Line Drain Pot removes condensation from the HPCI Turbine Exhaust line drain when the HPCI system is in standby. Level in the Drain Pot is controlled automatically by drain valve F053. F053 is interlocked closed IF BOTH F001 AND TSV ARE NOT FULLY CLOSED. EITHER F001 OR the TURBINE STOP VALVE must be closed for F053 to open (both units). The drain pot discharges to the Barometric Condenser.

9. The HPCI System Rupture Disks (D003 and D004) located in the Torus Area protect the HPCI Turbine casing from excessive exhaust pressure. The two diaphragms are in series and are designed to rupture at 150 psig. The space between them is vented to the Torus area through an orifice. High pressure between the diaphragms will cause a HPCI System Isolation at 10 psig.

10. HPCI Exhaust Line Vacuum Breakers F102 and F103 prevent drawing a vacuum on the exhaust line by steam condensation following turbine shutdown. This vacuum would result in siphoning of Suppression Pool water into the HPCI Exhaust line and could cause exhaust line damage on a subsequent start.

11. Vacuum Breaker Isolation Valves F104 and F111 are normally open and will isolate the vacuum breaker piping if conditions indicate a possible HPCI system leak. F104 and F111 are AC operated MOVs powered from R24-S011 and S012 respectively.

    - These valves automatically close on a combined signal of High Drywell Pressure (set at 1.85 psig) and Low HPCI Steam Line Pressure (set at 128 psig).

B. Gland Seal Condenser System

The Gland Seal Condenser System prevents steam outleakage from the turbine shaft seals, turbine stop valve, turbine control valve, and turbine exhaust drain from entering the HPCI room. This outleakage could cause potential safety (High temperatures) or airborne radiological hazards. The system automatically starts on an auto-initiation of HPCI and consists of:

3.6 CONTAINMENT SYSTEMS

3.6.1.3 Primary Containment Isolation Valves (PCIVs)

LCO 3.6.1.3 Each PCIV, except reactor building-to-suppression chamber vacuum breakers, shall be OPERABLE.

APPLICABILITY: MODES 1, 2, and 3,
When associated instrumentation is required to be OPERABLE per LCO 3.3.6.1, "Primary Containment Isolation Instrumentation."

ACTIONS

----------NOTES----------

1. Penetration flow paths except for 18 inch purge valve penetration flow paths may be unisolated intermittently under administrative controls.
2. Separate Condition entry is allowed for each penetration flow path.
3. Enter applicable Conditions and Required Actions for systems made inoperable by PCIVs.
4. Enter applicable Conditions and Required Actions of LCO 3.6.1.1, "Primary Containment," when PCIV leakage results in exceeding overall containment leakage rate acceptance criteria.

CONDITION	REQUIRED ACTION	COMPLETION TIME
A. ---------NOTE--------- Only applicable to penetration flow paths with two PCIVs. ---------- One or more penetration flow paths with one PCIV inoperable except due to leakage not within limit.	A.1 Isolate the affected penetration flow path by use of at least one closed and de-activated automatic valve, closed manual valve, blind flange, or check valve with flow through the valve secured. AND	4 hours except for main steam line AND 8 hours for main steam line (continued)

ACTIONS

CONDITION	REQUIRED ACTION	COMPLETION TIME
A. (continued)	A.2 --------NOTE--------- Isolation devices in high radiation areas may be verified by use of administrative means. ----------	
	Verify the affected penetration flow path is isolated.	Once per 31 days for isolation devices outside primary containment AND Prior to entering MODE 2 or 3 from MODE 4 if primary containment was de-inerted while in MODE 4, if not performed within the previous 92 days, for isolation devices inside primary containment

(continued)

ACTIONS (continued)

CONDITION	REQUIRED ACTION	COMPLETION TIME
B. ---------NOTE--------- Only applicable to penetration flow paths with two PCIVs. ---------- One or more penetration flow paths with two PCIVs inoperable except due to leakage not within limit.	B.1 Isolate the affected penetration flow path by use of at least one closed and de-activated automatic valve, closed manual valve, or blind flange.	1 hour
C. ---------NOTE--------- Only applicable to penetration flow paths with only one PCIV. ---------- One or more penetration flow paths with one PCIV inoperable except due to leakage not within limits.	C.1 Isolate the affected penetration flow path by use of at least one closed and de-activated automatic valve, closed manual valve, or blind flange.	4 hours except for excess flow check valve (EFCV) line AND 12 hours for EFCV line
	AND	
	C.2 --------NOTE--------- Valves and blind flanges in high radiation areas may be verified by use of administrative means. ---------- Verify the affected penetration flow path is isolated.	Once per 31 days

(continued)

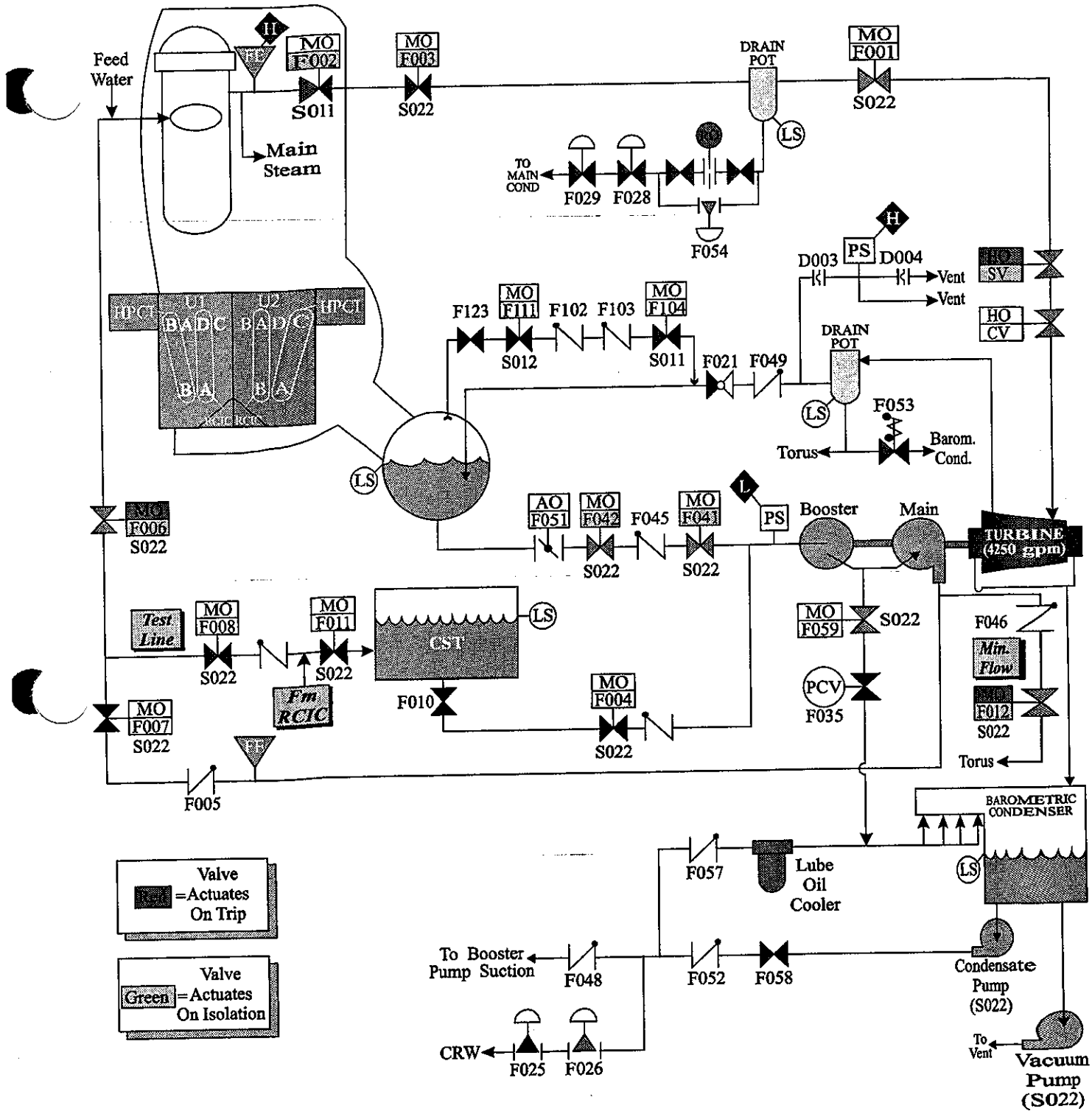

HPCI SYSTEM (SIMPLIFIED DIAGRAM)

LT-00501 Fig 1

14. 209001G2.2.21 001

The "A" Core Spray system on Unit 1 was taken out-of-service to inspect the pump internals due to high vibration. Foreign material was found inside the pump and no additional repairs were necessary. The unit is in Day 5 of a 7 day LCO and the system has been returned to service, filled and vented.

Which ONE of the following indicates the surveillances that are required to be performed prior to declaring "A" Core Spray operable?

A. SR 3.5.1.1 piping filled from pump disch to injection valve, SR 3.5.1.7 flow rate test, SR 3.5.1.10 subsystem actuates on initiation signal.

B. SR 3.5.1.1 piping filled from pump disch to injection valve, SR 3.5.1.2 valve position verification, SR 3.5.1.7 flow rate test, SR 3.5.1.10 subsystem actuates on initiation signal.

C. SR 3.5.1.2 valve position verification, SR 3.5.1.7 flow rate test, SR 3.5.1.10 subsystem actuates on initiation signal, SR 3.5.1.13 ECCS Response time.

D. SR 3.5.1.1 piping filled from pump disch to injection valve, SR 3.5.1.2 valve position verification, SR 3.5.1.7 flow rate test.

Reference: Tech Spec Bases SR 3.0.1

A. Incorrect since SR 3.5.1.10 does not need to be performed since no work was done on the Core Spray Logic and SR 3.5.1.2 does need to be performed since valves in the system were out of the normal Operable lineup.

B. Incorrect since SR 3.5.1.10 does not need to be performed since no work was done on the Core Spray Logic.

C. Incorrect since SR 3.5.1.10 and SR 3.5.1.13 do not need to be performed since no work was done on the Core Spray Logic. Also, SR 3.5.1.1 does need to be performed since system was drained.

D. Correct answer.

RO Tier:		SRO Tier:	T2G1
Keyword:	TECH SPEC	Cog Level:	C/A 2.3/3.5
Source:	N	Exam:	HT02301
Test:	S	Misc:	TCK

QUESTIONS REPORT
for HT2002

1. 209001G2.2.21 001

The "A" Core Spray system on Unit 1 was taken out-of-service to inspect the pump internals due to high vibration. Foreign material was found inside the pump and no additional repairs were necessary. The unit is in Day 5 of a 7 day LCO and the system has been returned to service, filled and vented. Which surveillances are required to be performed prior to declaring A Core Spray operable?

A. SR 3.5.1.1 piping filled from pump disch to injection valve, SR 3.5.1.7 flow rate test, SR 3.5.1.10 subsystem actuates on initiation signal.

B. SR 3.5.1.1 piping filled from pump disch to injection valve, SR 3.5.1.2 valve position verification, SR 3.5.1.7 flow rate test, SR 3.5.1.10 subsystem actuates on initiation signal.

C. SR 3.5.1.2 valve position verification, SR 3.5.1.7 flow rate test, SR 3.5.1.10 subsystem actuates on initiation signal, SR 3.5.1.13 ECCS Response time.

D. SR 3.5.1.1 piping filled from pump disch to injection valve, SR 3.5.1.2 valve position verification, SR 3.5.1.7 flow rate test.

Reference: Tech Spec Bases SR 3.0.1

A. Incorrect since SR 3.5.1.10 does not need to be performed since no work was done on the Core Spray Logic and SR 3.5.1.2 does need to be performed since valves in the system were out of the normal Operable lineup.

B. Incorrect since SR 3.5.1.10 does not need to be performed since no work was done on the Core Spray Logic.

C. Incorrect since SR 3.5.1.10 and SR 3.5.1.13 do not need to be performed since no work was done on the Core Spray Logic. Also, SR 3.5.1.1 does need to be performed since system was drained.

D. Correct answer.

B 3.0 SURVEILLANCE REQUIREMENT (SR) APPLICABILITY

BASES

SRs

SR 3.0.1 through SR 3.0.4 establish the general requirements applicable to all Specifications and apply at all times, unless otherwise stated.

SR 3.0.1

SR 3.0.1 establishes the requirement that SRs must be met during the MODES or other specified conditions in the Applicability for which the requirements of the LCO apply, unless otherwise specified in the individual SRs. This Specification is to ensure that Surveillances are performed to verify the OPERABILITY of systems and components, and that variables are within specified limits. Failure to meet a Surveillance within the specified Frequency, in accordance with SR 3.0.2, constitutes a failure to meet an LCO.

Systems and components are assumed to be OPERABLE when the associated SRs have been met. Nothing in this Specification, however, is to be construed as implying that systems or components are OPERABLE when:

a. The systems or components are known to be inoperable, although still meeting the SRs; or

b. The requirements of the Surveillance(s) are known to be not met between required Surveillance performances.

Surveillances do not have to be performed when the unit is in a MODE or other specified condition for which the requirements of the associated LCO are not applicable, unless otherwise specified. The SRs associated with a Special Operations LCO are only applicable when the Special Operations LCO is used as an allowable exception to the requirements of a Specification.

Surveillances, including Surveillances invoked by Required Actions, do not have to be performed on inoperable equipment because the ACTIONS define the remedial measures that apply. Surveillances have to be met and performed in accordance with SR 3.0.2, prior to returning equipment to OPERABLE status.

Upon completion of maintenance, appropriate post maintenance testing is required to declare equipment OPERABLE. This includes ensuring applicable Surveillances are not failed and their most recent performance is in accordance with SR 3.0.2. Post maintenance

(continued)

BASES

SR 3.0.1 (continued)

testing may not be possible in the current MODE or other specified conditions in the Applicability due to the necessary unit parameters not having been established. In these situations, the equipment may be considered OPERABLE provided testing has been satisfactorily completed to the extent possible and the equipment is not otherwise believed to be incapable of performing its function. This will allow operation to proceed to a MODE or other specified condition where other necessary post maintenance tests can be completed.

Some examples of this process are:

a. Control Rod Drive maintenance during refueling that requires scram testing at > 800 psi. However, if other appropriate testing is satisfactorily completed and the scram time testing of SR 3.1.4.3 is satisfied, the control rod can be considered OPERABLE. This allows startup to proceed to reach 800 psi to perform other necessary testing.

b. High pressure coolant injection (HPCI) maintenance during shutdown that requires system functional tests at a specified pressure. Provided other appropriate testing is satisfactorily completed, startup can proceed with HPCI considered OPERABLE. This allows operation to reach the specified pressure to complete the necessary post maintenance testing.

SR 3.0.2

SR 3.0.2 establishes the requirements for meeting the specified Frequency for Surveillances and any Required Action with a Completion Time that requires the periodic performance of the Required Action on a "once per..." interval.

SR 3.0.2 permits a 25% extension of the interval specified in the Frequency. This extension facilitates Surveillance scheduling and considers plant operating conditions that may not be suitable for conducting the Surveillance (e.g., transient conditions or other ongoing Surveillance or maintenance activities).

The 25% extension does not significantly degrade the reliability that results from performing the Surveillance at its specified Frequency. This is based on the recognition that the most probable result of any particular Surveillance being performed is the verification of conformance with the SRs. The exceptions to SR 3.0.2 are those Surveillances for which the 25% extension of the interval specified in the Frequency does not apply. These exceptions are stated in the individual Specifications. The requirements of regulations take

(continued)

25. 215004K5.03 001

A startup is in progress on Unit 1 with all the IRM's on Range 4. The Control Board Operator is in the process of withdrawing SRM's to keep the rod block cleared when it is determined that SRM "A" will not retract. All attempts to free the SRM have failed and Upper Management decides to continue with the startup and to leave the SRM inserted.

Which ONE of the following states IF and WHEN the SRM should be declared INOPERABLE?

A. Declare "A" SRM INOPERABLE immediately, since the SRM cannot be moved.

B. Declare "A" SRM INOPERABLE when it is bypassed to continue with the startup.

C. You don't have to consider the SRM Inoperable since the SRM's are not required with IRM's on range 3 or above.

D. Declare "A" SRM INOPERABLE when the "A" SRM reading deviates by >200 cps from the other 3 SRM's.

References: Tech Spec 3.3.1.2, Source Range Monitor (SRM) Instrumentation
Tech Spec 3.3.1.2 Bases
Technical Requirements Manual Table 3.3.2-1
34SV-SUV-019-2S, Surveillance Checks Rev. 32.3 pg 21 of 59
(NOTE) If this question is unacceptable then HATCH99.BNK #96 may be used in its place.

A. Incorrect since the SRM is currently performing its function and there isn't a requirement that the detector move.

B. Correct answer. The SRM has to be bypassed prior to continuing with the startup since there is a rod block inserted when the SRM reaches the high limit of 7 X 10e4.

C. Incorrect since the Rod Block function of the SRM's are required until the IRM's are on range 8 or above.

D. Incorrect since the deviation is figured as the Max divided by Min ≤ 20.

RO Tier:		SRO Tier:	T2G1
Keyword:	SRM	Cog Level:	C/A 2.8/2.8
Source:	N	Exam:	HT02301
Test:	S	Misc:	TCK

QUESTIONS REPORT
for HT2002

1. 215004K5.03 001

A startup is in progress on Unit 1 with all the IRM's on Range 4. The Control Board Operator is in the process of withdrawing SRM's to keep the rod block cleared when it is determined that SRM "A" will not retract. All attempts to free the SRM have failed and Upper Management decides to continue with the startup and to leave the SRM inserted. As Shift Supervisor, determine IF and WHEN the SRM should be declared INOPERABLE?

A. Declare "A" SRM INOPERABLE immediately, since the SRM cannot be moved.

B. Declare "A" SRM INOPERABLE when it is bypassed to continue with the startup.

C. You don't have to consider the SRM Inoperable since the SRM's are not required with IRM's on range 2 or above.

D. Declare "A" SRM INOPERABLE when the "A" SRM reading deviates by >200 cps form the other 3 SRM's.

References: Tech Spec 3.3.1.2, Source Range Monitor (SRM) Instrumentation
Tech Spec 3.3.1.2 Bases
34SV-SUV-019-2S, Surveillance Checks Rev. 32.3 pg 21 of 59
(NOTE) If this question is unacceptable then HATCH99.BNK #96 may be used in its place.

A. Incorrect since the SRM is currently performing its function and there isn't a requirement that the detector move.

B. Correct answer. The SRM has to be bypassed prior to continuing with the startup since there is a rod block inserted when the SRM reaches the high limit of 7 X 10e4.

C. Incorrect since the SRM's are required until the IRM's are on range 8 or above.

D. Incorrect since the deviation is figured as the Max divided by Min $\leq$ 20.

Table T3.3.2-1 (Page 1 of 2)
Control Rod Block Instrumentation

FUNCTION	APPLICABLE MODES OR OTHER SPECIFIED CONDITIONS	REQUIRED CHANNELS PER FUNCTION	SURVEILLANCE REQUIREMENTS	ALLOWABLE VALUE
1. SRM				
a. Detector Not Full In	2[a]	3	TSR 3.3.2.1	NA
	5[e]	2[b]	TSR 3.3.2.1	NA
b. Upscale	2[c]	3	TSR 3.3.2.1 TSR 3.3.2.3	$\leq 10^5$ cps
	5	2[b]	TSR 3.3.2.1 TSR 3.3.2.3	$\leq 10^5$ cps
c. Inoperative	2[c]	3	TSR 3.3.2.1	NA
	5	2[b]	TSR 3.3.2.1	NA
d. Downscale	2[a]	3	TSR 3.3.2.1 TSR 3.3.2.3	$\geq$ 3 cps
	5	2[b]	TSR 3.3.2.1 TSR 3.3.2.3	$\geq$ 3 cps
2. IRM				
a. Detector Not Full In	2,5[e]	6	TSR 3.3.2.1	N/A
b. Upscale	2,5	6	TSR 3.3.2.1 TSR 3.3.2.3	$\leq$ 108/125 of full scale
c. Inoperative	2,5	6	TSR 3.3.2.1	NA
d. Downscale	2[d]	6	TSR 3.3.2.1 TSR 3.3.2.3	$\geq$ 5/125 of full scale

(continued)

(a) With IRMs on Range 2 or below.

(b) Only one SRM is required to be OPERABLE during spiral offload or reload when the fueled region includes only that SRM detector.

(c) With IRMs on Range 7 or below.

(d) With IRMs on Range 2 or above.

(e) This function is not required if the detector is verified to be in the fully inserted position and the drive motor is deactivated.

7.5	PANEL - INSTRUMENT / TECH SPEC.	NOTE	OPER COND	FREQ	T/S - OPER LIM	NIGHT	DAY
7.5.1	2H11-P689 - 2D11-K621A, W.R. Drywell Radiation 2H11-P690 - 2D11-K621B, W.R. Drywell Radiation	N	1,2,3	a	≤ 138 R/HR		
7.5.2	Confirm max minus min ≤ 10 for Items in 7.5.1 (SR 3.3.3.1.1 for 3.3.3.1-1(5.)), (SR 3.3.6.1.1 for 3.3.6.1-1(2.c.))	B	1,2,3	a			
7.5.3	2D21-P600 - Area Rad Monitors	B	6	a	On scale		
7.5.4	2D21-P600 - 2D21-K601A, Area Rad. Monitor - 2D21-K601M, Area Rad. Monitor (TSR 3.3.7.1 for T3.3.7-1(4.))		1,2,3,(*)	a	On scale AND ≤ 20 mr/hr.		
7.5.5	Confirm Max Divided by Min ≤ 5 for Items in 7.5.4. (TSR 3.3.7.1 for T3.3.7-1(4))	B	1,2,3,(*)	a			
7.5.6	2H11-P606 - 2C51-K600A, SRM A CPS - 2C51-K600B, SRM B CPS - 2C51-K600C, SRM C CPS - 2C51-K600D, SRM D CPS (SR 3.3.1.2.4 for 3.3.1.2-1(1.))		2(**),3,4,5	a	> 3 cps AND detector full-in		
7.5.7	Confirm max divided by min ≤ 20 for items in 7.5.6 (SR 3.3.1.2.1 AND 3.3.1.2.3 for 3.3.1.2-1(1.))	B	2(**),3,4,5	a			
7.5.8	2H11-P606 - 2C51-K601 A thru H, IRM Channel Check (SR 3.3.1.1.1 for 3.3.1.1-1(1.a.))	B	2,5($)	a	On scale and difference between Highest Range and Lowest Range ≤ 3		
7.5.9	2H11-P608 - 2C51-K615A thru D, APRM Channel Check (SR 3.3.1.1.1 for 3.3.1.1-1(2.a.)(2.b.)(2.c.)(2.e.)(2.f), SR 3.10.8.1)	B, BB	1,2,5(+)	a	SELF-TEST OK, NO ERROR MESSAGES. All APRMs read within 3% power of each other		
7.5.10	2H11-P608 - 2C51-K617A thru D, APRM 2 of 4 Voter Logic Module	B, C, CC	1,2,5(+)	a	Lamp test, All LED's lit		
						Initials	
						Time	

Calculations verified ____/____ Date_____
Night / Day

(*) During movement of irradiated fuel assemblies in the secondary containment, during CORE ALTERATIONS, during OPDRVs.
($) With any control rod withdrawn from a core cell containing one or more fuel assemblies.
(+) During Shutdown Margin Testing.
(**) With IRM's on Range 2 OR below.

Table 3.3.1.2-1 (page 1 of 1)
Source Range Monitor Instrumentation

FUNCTION	APPLICABLE MODES OR OTHER SPECIFIED CONDITIONS	REQUIRED CHANNELS	SURVEILLANCE REQUIREMENTS
1. Source Range Monitor	2[a]	3	SR 3.3.1.2.1 SR 3.3.1.2.4 SR 3.3.1.2.6 SR 3.3.1.2.7
	3, 4	2	SR 3.3.1.2.3 SR 3.3.1.2.4 SR 3.3.1.2.6 SR 3.3.1.2.7
	5	2[b][c]	SR 3.3.1.2.1 SR 3.3.1.2.2 SR 3.3.1.2.4 SR 3.3.1.2.5 SR 3.3.1.2.7

(a) With IRMs on Range 2 or below.

(b) Only one SRM channel is required to be OPERABLE during spiral offload or reload when the fueled region includes only that SRM detector.

(c) Special movable detectors may be used in place of SRMs if connected to normal SRM circuits.

BASES

LCO (continued)

indication can be generated. These special detectors provide more flexibility in monitoring reactivity changes during fuel loading, since they can be positioned anywhere within the core during refueling. They must still meet the location requirements of SR 3.3.1.2.2 and all other required SRs for SRMs.

For an SRM channel to be considered OPERABLE, it must be providing neutron flux monitoring indication.

APPLICABILITY

The SRMs are required to be OPERABLE in MODES 2, 3, 4, and 5 prior to the IRMs being on scale on Range 3 to provide for neutron monitoring. In MODE 1, the APRMs provide adequate monitoring of reactivity changes in the core; therefore, the SRMs are not required. In MODE 2, with IRMs on Range 3 or above, the IRMs provide adequate monitoring and the SRMs are not required.

ACTIONS

A.1 and B.1

In MODE 2, with the IRMs on Range 2 or below, SRMs provide the means of monitoring core reactivity and criticality. With any number of the required SRMs inoperable, the ability to monitor neutron flux is degraded. Therefore, a limited time is allowed to restore the inoperable channels to OPERABLE status.

Provided at least one SRM remains OPERABLE, Required Action A.1 allows 4 hours to restore the required SRMs to OPERABLE status. This time is reasonable because there is adequate capability remaining to monitor the core, there is limited risk of an event during this time, and there is sufficient time to take corrective actions to restore the required SRMs to OPERABLE status or to establish alternate IRM monitoring capability. During this time, control rod withdrawal and power increase is not precluded by this Required Action. Having the ability to monitor the core with at least one SRM, proceeding to IRM Range 3 or greater (with overlap required by SR 3.3.1.1.6), and thereby exiting the Applicability of this LCO, is acceptable for ensuring adequate core monitoring and allowing continued operation.

With three required SRMs inoperable, Required Action B.1 allows no positive changes in reactivity (control rod withdrawal must be immediately suspended) due to inability to monitor the changes. Required Action A.1 still applies and allows 4 hours to restore

(continued)

BASES

ACTIONS

A.1 and B.1 (continued)

monitoring capability prior to requiring control rod insertion. This allowance is based on the limited risk of an event during this time, provided that no control rod withdrawals are allowed, and the desire to concentrate efforts on repair, rather than to immediately shut down, with no SRMs OPERABLE.

C.1

In MODE 2, if the required number of SRMs is not restored to OPERABLE status within the allowed Completion Time, the reactor shall be placed in MODE 3. With all control rods fully inserted, the core is in its least reactive state with the most margin to criticality. The allowed Completion Time of 12 hours is reasonable, based on operating experience, to reach MODE 3 from full power conditions in an orderly manner and without challenging plant systems.

D.1 and D.2

With one or more required SRMs inoperable in MODE 3 or 4, the neutron flux monitoring capability is degraded or nonexistent. The requirement to fully insert all insertable control rods ensures that the reactor will be at its minimum reactivity level while no neutron monitoring capability is available. Placing the reactor mode switch in the shutdown position prevents subsequent control rod withdrawal by maintaining a control rod block. The allowed Completion Time of 1 hour is sufficient to accomplish the Required Action, and takes into account the low probability of an event requiring the SRM occurring during this interval.

E.1 and E.2

With one or more required SRMs inoperable in MODE 5, the ability to detect local reactivity changes in the core during refueling is degraded. CORE ALTERATIONS must be immediately suspended and action must be immediately initiated to fully insert all insertable control rods in core cells containing one or more fuel assemblies. Suspending CORE ALTERATIONS prevents the two most probable causes of reactivity changes, fuel loading and control rod withdrawal, from occurring. Inserting all insertable control rods ensures that the reactor will be at its minimum reactivity given that fuel is present in the

(continued)

BASES

ACTIONS

E.1 and E.2 (continued)

core. Suspension of CORE ALTERATIONS shall not preclude completion of the movement of a component to a safe, conservative position.

Action (once required to be initiated) to insert control rods must continue until all insertable rods in core cells containing one or more fuel assemblies are inserted.

SURVEILLANCE REQUIREMENTS

As Noted at the beginning of the SRs, the SRs for each SRM Applicable MODE or other specified conditions are found in the SRs column of Table 3.3.1.2-1.

The Surveillances are modified by a second Note to indicate that when a channel is placed in an inoperable status solely for performance of required Surveillances, entry into associated Conditions and Required Actions may be delayed for up to 6 hours, provided the other required channel (or channels when 3 channels are required) is OPERABLE. Upon completion of the Surveillance, or expiration of the 6 hour allowance, the channel must be returned to OPERABLE status or the applicable Condition entered and Required Actions taken. The Note is based upon a NRC Safety Evaluation Report (Ref. 1) which concluded that the 6 hour testing allowance does not significantly reduce the probability of detecting power changes, when necessary.

SR 3.3.1.2.1 and SR 3.3.1.2.3

Performance of the CHANNEL CHECK ensures that a gross failure of instrumentation has not occurred. A CHANNEL CHECK is normally a comparison of the parameter indicated on one channel to a similar parameter on another channel. It is based on the assumption that instrument channels monitoring the same parameter should read approximately the same value. Significant deviations between the instrument channels could be an indication of excessive instrument drift in one of the channels or something even more serious. A CHANNEL CHECK will detect gross channel failure; thus, it is key to verifying the instrumentation continues to operate properly between each CHANNEL CALIBRATION.

Agreement criteria are determined by the plant staff based on a combination of the channel instrument uncertainties, including

(continued)

BASES

SURVEILLANCE REQUIREMENTS

SR 3.3.1.2.1 and SR 3.3.1.2.3 (continued)

indication and readability. If a channel is outside the criteria, it may be an indication that the instrument has drifted outside its limit.

The Frequency of once every 12 hours for SR 3.3.1.2.1 is based on operating experience that demonstrates channel failure is rare. While in MODES 3 and 4, reactivity changes are not expected; therefore, the 12 hour Frequency is relaxed to 24 hours for SR 3.3.1.2.3. The CHANNEL CHECK supplements less formal, but more frequent, checks of channels during normal operational use of the displays associated with the channels required by the LCO.

SR 3.3.1.2.2

To provide adequate coverage of potential reactivity changes in the core when the fueled region encompasses more than one SRM, one SRM is required to be OPERABLE in the quadrant where CORE ALTERATIONS are being performed, and the other OPERABLE SRM must be in an adjacent quadrant containing fuel. Note 1 states that the SR is required to be met only during CORE ALTERATIONS. It is not required to be met at other times in MODE 5 since core reactivity changes are not occurring. This Surveillance consists of a review of plant logs to ensure that SRMs required to be OPERABLE for given CORE ALTERATIONS are, in fact, OPERABLE. In the event that only one SRM is required to be OPERABLE (when the fueled region encompasses only one SRM), per Table 3.3.1.2-1, footnote (b), only the a. portion of this SR is required. Note 2 clarifies that more than one of the three requirements can be met by the same OPERABLE SRM. The 12 hour Frequency is based upon operating experience and supplements operational controls over refueling activities that include steps to ensure that the SRMs required by the LCO are in the proper quadrant.

SR 3.3.1.2.4

This Surveillance consists of a verification of the SRM instrument readout to ensure that the SRM reading is greater than a specified minimum count rate, which ensures that the detectors are indicating count rates indicative of neutron flux levels within the core. This surveillance also requires the signal to noise ratio to be verified to be ≥ 2:1. A signal to noise ratio that meets this requirement ensures the detectors are inserted to an acceptable operating level. Therefore, to meet this portion of the surveillance, it is necessary only to verify the

(continued)

29. 218000G2.2.22 001

On 3/2/02 at 0800 Unit 2 is in Mode 1 when RCIC is declared inoperable and day 1 of a 14 day LCO is entered. On 3/7/02 at 1600 the Instrument Techs start a surveillance on a Drywell Pressure instrument associated with ADS Trip system A by valving the instrument out. At 2200 they report to the Shift Supervisor that the instrument cannot be calibrated and that no other instruments are affected.

Per Tech Specs, which ONE of the following is the latest time the channel shall be placed in the tripped condition?
(Provide Tech Spec section 3.3.5.1 and 3.5.3)

A.✓ 2200 on 3/11/02.

B. 1600 on 3/11/02.

C. 2200 on 3/15/02.

D. 1600 on 3/15/02.

Reference: Tech Spec section3.3.5.1 and 3.5.3.

A. Correct answer.

B. Incorrect answer. Can delay the actions for Condition F for 6 hours due to note 2 for surveillance requirements even though the instrument is inoperable.

C. Incorrect answer. Completion time in answer is 8 days from required action time. This is wrong since RCIC is inoperable concurrent with this instrument.

D. Completion time in answer is 8 days from instrument being inoperable. This is wrong since you can use the surveillance note of 6 hours and RCIC is also inoperable.

RO Tier:		SRO Tier:	T2G1
Keyword:	TECH SPEC	Cog Level:	C/A 3.4/4.1
Source:	N	Exam:	HT02301
Test:	S	Misc:	TCK

6. 218000G2.2.22 001

On 3/2/02 at 0800 Unit 2 is in Mode 1 when RCIC is declared inoperable and day 1 of a 14 day LCO is entered. On 3/7/02 at 1600 the Instrument Techs start a surveillance on a Drywell Pressure instrument associated with ADS Trip system A by valving the instrument out. At 2200 they report to the Shift Supervisor that the instrument cannot be calibrated and that no other instruments are affected. Per Tech Specs, what is the latest time the channel shall be placed in the tripped condition?

A. 2200 on 3/11/02.

B. 1600 on 3/11/02.

C. 2200 on 3/15/02.

D. 1600 on 3/15/02.

Reference: Tech Spec section3.3.5.1 and 3.5.3.

A. Correct answer.

B. Incorrect answer. Can delay the actions for Condition F for 6 hours due to note 2 for surveillance requirements even though the instrument is inoperable.

C. Incorrect answer. Completion time in answer is 8 days from required action time. This is wrong since RCIC is inoperable concurrent with this instrument.

D. Completion time in answer is 8 days from instrument being inoperable. This is wrong since you can use the surveillance note of 6 hours and RCIC is also inoperable.

3.3 INSTRUMENTATION

3.3.5.1 Emergency Core Cooling System (ECCS) Instrumentation

LCO 3.3.5.1 The ECCS instrumentation for each Function in Table 3.3.5.1-1 shall be OPERABLE.

APPLICABILITY: According to Table 3.3.5.1-1.

ACTIONS

----------NOTE----------
Separate Condition entry is allowed for each channel.

CONDITION	REQUIRED ACTION	COMPLETION TIME
A. One or more channels inoperable.	A.1 Enter the Condition referenced in Table 3.3.5.1-1 for the channel.	Immediately
B. As required by Required Action A.1 and referenced in Table 3.3.5.1-1.	B.1 ----------NOTES---------- 1. Only applicable in MODES 1, 2, and 3. 2. Only applicable for Functions 1.a, 1.b, 2.a, and 2.b. ---------- Declare supported feature(s) inoperable.	1 hour from discovery of loss of initiation capability for feature(s) in both divisions
	AND	

(continued)

ACTIONS (continued)

CONDITION	REQUIRED ACTION	COMPLETION TIME
F. As required by Required Action A.1 and referenced in Table 3.3.5.1-1.	F.1 Declare Automatic Depressurization System (ADS) valves inoperable. AND F.2 Place channel in trip.	1 hour from discovery of loss of ADS initiation capability in both trip systems 96 hours from discovery of inoperable channel concurrent with HPCI or reactor core isolation cooling (RCIC) inoperable AND 8 days
G. As required by Required Action A.1 and referenced in Table 3.3.5.1-1.	G.1 Declare ADS valves inoperable. AND G.2 Restore channel to OPERABLE status.	1 hour from discovery of loss of ADS initiation capability in both trip systems 96 hours from discovery of inoperable channel concurrent with HPCI or RCIC inoperable AND 8 days
H. Required Action and associated Completion Time of Condition B, C, D, E, F, or G not met.	H.1 Declare associated supported feature(s) inoperable.	Immediately

SURVEILLANCE REQUIREMENTS

----------NOTES----------

1. Refer to Table 3.3.5.1-1 to determine which SRs apply for each ECCS Function.

2. When a channel is placed in an inoperable status solely for performance of required Surveillances, entry into associated Conditions and Required Actions may be delayed as follows: (a) for up to 6 hours for Functions 3.c and 3.f; and (b) for up to 6 hours for Functions other than 3.c and 3.f provided the associated Function or the redundant Function maintains initiation capability.

SURVEILLANCE		FREQUENCY
SR 3.3.5.1.1	Perform CHANNEL CHECK.	12 hours
SR 3.3.5.1.2	Perform CHANNEL FUNCTIONAL TEST.	92 days
SR 3.3.5.1.3	Perform CHANNEL CALIBRATION.	92 days
SR 3.3.5.1.4	Perform CHANNEL CALIBRATION.	18 months
SR 3.3.5.1.5	Perform LOGIC SYSTEM FUNCTIONAL TEST.	18 months

Table 3.3.5.1-1 (page 4 of 5)
Emergency Core Cooling System Instrumentation

FUNCTION	APPLICABLE MODES OR OTHER SPECIFIED CONDITIONS	REQUIRED CHANNELS PER FUNCTION	CONDITIONS REFERENCED FROM REQUIRED ACTION A.1	SURVEILLANCE REQUIREMENTS	ALLOWABLE VALUE
4. Automatic Depressurization System (ADS) Trip System A					
a. Reactor Vessel Water Level - Low Low Low, Level 1	1, 2[d], 3[d]	2	F	SR 3.3.5.1.1 SR 3.3.5.1.2 SR 3.3.5.1.4 SR 3.3.5.1.5	≥ -113 inches
b. Drywell Pressure - High	1, 2[d], 3[d]	2	F	SR 3.3.5.1.1 SR 3.3.5.1.2 SR 3.3.5.1.4 SR 3.3.5.1.5	≤ 1.92 psig
c. Automatic Depressurization System Initiation Timer	1, 2[d], 3[d]	1	G	SR 3.3.5.1.4 SR 3.3.5.1.5	≤ 114 seconds
d. Reactor Vessel Water Level - Low, Level 3 (Confirmatory)	1, 2[d], 3[d]	1	F	SR 3.3.5.1.1 SR 3.3.5.1.2 SR 3.3.5.1.4 SR 3.3.5.1.5	≥ 0 inches
e. Core Spray Pump Discharge Pressure - High	1, 2[d], 3[d]	2	G	SR 3.3.5.1.1 SR 3.3.5.1.2 SR 3.3.5.1.4 SR 3.3.5.1.5	≥ 137 psig and ≤ 180 psig
f. Low Pressure Coolant Injection Pump Discharge Pressure - High	1, 2[d], 3[d]	4	G	SR 3.3.5.1.1 SR 3.3.5.1.2 SR 3.3.5.1.4 SR 3.3.5.1.5	≥ 112 psig and ≤ 180 psig
g. Automatic Depressurization System Low Water Level Actuation Timer	1, 2[d], 3[d]	2	G	SR 3.3.5.1.4 SR 3.3.5.1.5	≤ 12 minutes 18 seconds

(continued)

(d) With reactor steam dome pressure > 150 psig.

48. 264000K5.06 001

Unit 1 is operating at 75% RTP when the following actions occur:

Reactor Scram
D/G "A" and "B" start and attain proper speed and voltage
D/G "C" fails to start
Reactor Water Level -15" increasing
Drywell Pressure 4.5 psig
Drywell Temperature 200°F
Startup Transformers 1C and 1D are De-Energized

Which ONE of the following lists the major loads on the "1B" D/G and the sequence that they started?

A. Core Spray "B", LPCI "C", LPCI "D".

B. LPCI "C", LPCI "D", PSW "C".

C. LPCI "B", LPCI "C", LPCI "D".

D. LPCI "C", LPCI "D", PSW "D".

Reference: LT-LP-02801 Rev 3 pg 49 and 50 of 87.
Copy of Electrical Lineup

A. Incorrect since "B" Core Spray pump is powered from D/G "C" only.

B. Incorrect since "C" PSW pump only starts if the "A" PSW pump fails to start.

C. Incorrect since "B" LPCI pump starts from D/G "C" only.

D. Correct answer. PSW pump "D" starts since the "C" D/G has failed to start which powers the "B" PSW pump.

RO Tier:		SRO Tier:	T2G1
Keyword:	D/G START SEQUENCE	Cog Level:	C/A 3.4/3.5
Source:	N	Exam:	HT02301
Test:	S	Misc:	TCK

7. 264000K5.06 001

In regards to the Diesel Generator Loading Sequence, which ONE of the following describes why the engineered safety feature (ESF) loads are applied automatically in approx. 10 second intervals?

A. prevent overloading the DG output breaker and causing it to trip on overcurrent from starting motor-driven pumps.

B. minimize the initial voltage increase due to starting the motor-driven pumps.

C. prevent a differential lockout due to high starting current from the motor-driven pumps.

D. minimize the initial voltage drop due to starting the motor-driven pumps.

Reference: FSAR Section 8.3.1.1.3 F Sequential Loading

A. Incorrect since output breaker can handle current from starting all D/G loads at once.

B. Incorrect since starting pumps causes a voltage decrease instead of an increase.

C. Incorrect since the differential lockout is caused by an internal generator fault on different phases.

D. Correct answer.

(This may be too easy for an SRO Only question)

QUESTIONS REPORT
for HT2002

1. 264000K5.06 001

In regards to the Diesel Generator Loading Sequence, the engineered safety feature (ESF) loads are applied automatically in approx. 10 second intervals to:

A. prevent overloading the DG output breaker and causing it to trip on overcurrent.

B. minimize the initial voltage increase due to starting the motor-driven pumps.

C. prevent a differential lockout due to high starting current from the motor-driven pumps.

D. minimize the initial voltage drop due to starting the motor-driven pumps.

Reference: FSAR Section 8.3.1.1.3 F Sequential Loading

A. Incorrect since output breaker can handle current from starting all D/G loads at once.

B. Incorrect since starting pumps causes a voltage decrease instead of an increase.

C. Incorrect since the differential lockout is caused by an internal generator fault on different phases.

D. Correct answer.

(This may be too easy for an SRO Only question)

Review Attachment 2 with students

NOTE: Refer to Attachment 2 for detailed sequence.

3. Diesel Generator Start Failure

   a. If the time delayed (T2A and T2B) relays time out (7 seconds) before the Low Speed Relay deenergizes them, the Start Failure Relay (SFR) is energized (diesel generator has cranked for 7 seconds without firing and has failed to start).

   b. The energized Start Failure Relay energizes the Shutdown Relay (SDR) which seals in and stops the diesel generator.

   c. The diesel generator can be returned to a standby condition after the shutdown relay is manually reset using the pushbutton on P652. The diesel generator may now be restarted after a 100-second time delay.

EO 14

Table 02

5. Diesel Generator Loading Sequence

   a. If the diesel generator started due to a LOSP signal, it will tie to its respective 4160 VAC emergency bus and initiate LOSP/LOCA Timers and Load Shed Relays which will:

      1) Prior to the Diesel tying to the bus, all loads on the respective 4160 VAC emergency bus are Loadshed.

         NOTE: Loadshed is a term used to describe the tripping of power supply breakers to non-essential loads. This in conjunction with time delayed starts prevents overloading the diesels.

      2) Immediately start both Core Spray Pumps and LPCI RHR Pump C if a LOCA signal exists. (T=12 seconds)

3) 10 seconds later, LPCI RHR Pumps A, D and B start if a LOCA exists (T=22 seconds)

4) 8 seconds later, PSW Pumps A and B start (T=30 seconds)

5) 2 seconds later, PSW Pump C start if PSW pump A failed to start. (T=32 seconds)

6) 2 seconds later, PSW Pump D start if PSW pump B failed to start. (T=34 seconds)

b. This loading sequence prevents overloading the diesel generator due to motor starting current.

6. Diesel Generator Shutdown Sequence

NOTE: Refer to Attachment 2 for detailed sequence.

Figs 09 & 14

EO 15a

B. Diesel Generator Heating Ventilation System Operation

1. Generator Room Heating and Ventilation System

Each generator room contains three 50% heaters. Each heater is rated at 12 kW. These heaters are normally automatically controlled by separate wall mounted thermostats to maintain the area temperature above 40°F. The operating range of the heaters is 40-43°F.

MKV-2(1) Normal fan
MKV-1(2) Backup fans

There are three vents fans located in each generator room. The MK V-2 fan is controlled by thermostat X41-N012, and the MK V-1 fans are controlled by thermostat X41-N011. At 95°F increasing the MK V-2 fan is auto started and at 97°F increasing the MK V-1 primary fan is auto started. The MK V-1 fan is tripped off at 94°F decreasing and the MK V-2 fan at 92°F decreasing.

a. Interlocks

E__/OR INTERLOCKS

S WILL TRIP A DIESEL GENERATOR:

	SETPOINT
GH	21 psig
ıTURE HIGH	230 degrees
E LOW	205 degrees
I	9 psig
	0.5 inches Water
	1000 rpm
	<250 rpm, 7 seconds after Diesel Start

ER

LICABLE IN THE TEST MODE

ATOR'S TEST RELAYS RESULTS IN THE FOLLOWING:
ESEL GENERATOR EMERGENCY START
OF ASSOCIATED DIESEL GENERATOR OUTPUT BREAKER
SSOCIATED DIESEL GENERATOR AND EITHER ITS NORMAL OR

RE OF START-UP TRANSFORMER SUPPLY BREAKER TO 4160V
TO FAST TRANSFER WILL STILL OCCUR)
OF ASSOCIATED EMERGENCY 4160V BUS TO ITS ALTERNATE

GENERATOR TRIPS

DEENERGIZE THE DIESEL GENERATOR TEST RELAYS.

TIME	D/G "A"	D/G "B"	D/G "C"
0 SEC	START	START	START
12 SEC	TIE CORE SPRAY A	TIE LPCI C	TIE CORE SPRAY
22 SEC	LPCI A	LPCI D	LPCI B
30 SEC	PSW A		PSW B
32 SEC		PSW C IF PSW A FAILED TO START	
34 SEC		PSW D IF PSW B FAILED TO START	

Failed to start

MA
GENER
UNI

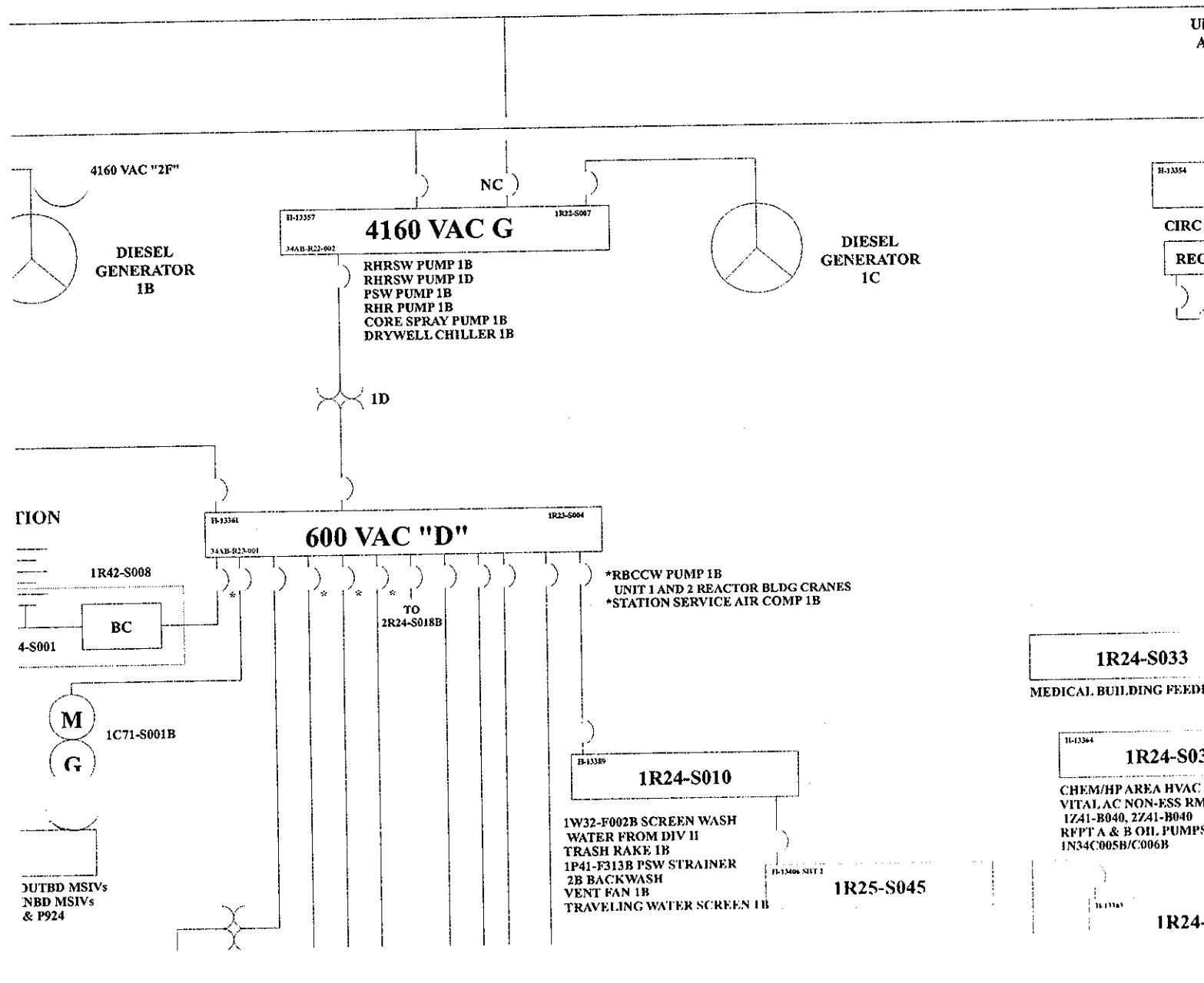

- The supply breakers between startup auxiliary transformers 2C and 2D on the associated essential 4160-V bus are tripped.

When the last condition above is met, the possibility of one diesel generator operating in parallel with any other diesel generator is precluded.

E. Load Shedding

When the diesel generator breaker closes, the following load shedding has already taken place:

The 4160-V loads and most nonessential 600-V loads are tripped, but the feeder breakers to the 4160-600-V station service transformers supplying the essential 600-V load centers and their associated MCCs remain closed. This ensures power continuity to vital 600-V auxiliaries such as the generator seal oil pumps and instrumentation transformers even when a reactor trip does not accompany loss of normal power.

F. Sequential Loading

The diesel generator loading sequence is shown in table 8.3-3. Emergency loads are shown in tables 8.3-4, 8.3-5, and 8.3-6.

Timing devices are provided to sequentially start the motors for each essential load. The engineered safety feature (ESF) loads are applied automatically in sequence at ~ 10-s intervals to minimize the initial voltage drop due to starting the induction motor-driven pumps. This method of starting motors provides flexibility in timing adjustment and independence of control. The tabulation of tables 8.3-3 through 8.3-6 assumes three diesel generators are available.

At time t-plus-30 s after a LOCA with all three essential buses available, four residual heat removal (RHR) and two core spray (CS) pumps would be in operation. Full flow injection or spray may still be prohibited by flow- or pressure-sensing ESF interlocks. Failure of any one diesel or diesel battery and its buses cannot prevent attainment of minimum safe shutdown requirement regardless of which bus fails. The plant operator can manually drop off any excess pumping capacity at any time t-plus-30 s but prior to proceeding into the second phase of accident control. This occurs at approximately time t-plus-10 min when reactor water level is stabilized and containment cooling begins.

The automatic starting and load sequencing times in the current design are more restrictive than the timing assumptions made in the SAFER/GESTR-LOCA analysis. The LOCA analysis supports a 34-s response time for CS and a 64-s response time for LPCI.

At time t-plus-10 min, all diesel generator loading can be controlled by the plant operator. The plant operator makes decisions as to which emergency loads may

58. 295002AA2.02 001

Unit 2 is holding load at 25% RTP. The main turbine is on line when the steam seal regulator fails closed.

Which ONE of the following describes the impact this will have on reactor power with no operator action?

A. Reactor power will remain constant since seal steam is not required at this power level.

B. Reactor power will decrease since condenser vacuum will decrease.

C. Reactor power will decrease since less steam is required from the reactor.

D. Reactor power will remain constant since the steam seal bypass valve automatically opens to maintain seal steam pressure constant.

Reference: SI-LP-02501 Rev. SI-00 pg 6 of 13

A. Incorrect since condenser vacuum will decrease with Rx Power <28%. This will cause reactor power to decrease.

B. Correct answer since seal steam is required up to 28% RTP or condenser vacuum will decrease. If condenser vacuum decreases then reactor power will decrease.

C. Incorrect since this amount of steam being drawn off of reactor is negligible..

D. Incorrect since steam seal bypass valve does not automatically open.

RO Tier:		SRO Tier:	T1G2
Keyword:	MAIN CONDENSER	Cog Level:	MEM 3.2/3.3
Source:	N	Exam:	HT02301
Test:	S	Misc:	TCK

D. Steam Seal System

Fig 2

1. The Steam Seal System contains one 100% capacity gland seal condenser, two 100% capacity steam packing exhauster fans, associated piping and valves.

2. The Steam Seal System supplies sealing steam to the main turbine, RFPT and shafts and various turbine valves, (main stop, control, combined intercept, and bypass valves). Sealing steam can is supplied by the main steam system.

3. The excess steam from the steam seals is condensed in the gland seal condenser and is returned as condensate to the main condenser. The air and non-condensable gases are removed by the Steam Packing Exhauster and are discharged via a 1.75 minute holdup volume to the main stack.

4. At low power (< 30%) sealing steam prevents air from being drawn across the seals and into the turbine which could result in a loss of condenser vacuum or damage to the main turbine.

5. At higher power (> 30%) pressure inside the turbine casing is greater than sealing steam pressure therefore the internal steam tends to leak into the seal cavity.

Fig 4

6. When the steam pressure leaking out past the inner labyrinth exceeds the seal steam supply pressure the steam seal regulator valve will close. Pressure is controlled in the seal steam header by two pressure control valves which dump to the main condenser.

IV. System Interfaces

A. Power Supplies

Mechanical Vacuum pump is powered from 600V 2A (2R23-S001) [U1 600V 1B (1R23-S002)].

Steam Packing Exhauster fans are powered from 208V MCC2 A2 2R24-S039 (600V MCC 1A R24-S005 for U1).

QUESTIONS REPORT
for HT2002

1. 295002AA2.02 001

According to procedure 34AB-N61-002-1S, Main Condenser Vacuum Low, SELECT the condition below which would require reducing reactor power to maintain condenser vacuum ≥ 25".

A. Inlet flow to holdup line is high.

B. Circulating Waterbox dP's are erratic.

C. Circulating Water dT exceeds ≥ 25 F.

D. Circulating Water Suction Bay has been < 116'.

Reference: Procedure 34AB-N61-002-1S, Rev. 4 pg 3 of 6

A. Incorrect since this requires the operator to check proper SJAE operation.

B. Incorrect since this would require the operator to vent the waterboxes and pumps.

C. Correct answer.

D. Incorrect since this would require the operator to vent the waterboxes and pumps.

4.0 SUBSEQUENT OPERATOR ACTIONS

NOTE

Decreasing Condenser Vacuum may result in saturated conditions within the Condenser and the flashing of condensate. IF it becomes necessary OR desirable to break Vacuum, THEN refer to 34AB-C71-001-1S, Scram Procedure, for placing the Condenser Low Vacuum Trip Bypass switches in BYPASS.

4.1 IF main condenser vacuum decreasing trend cannot be stopped prior to any automatic action that could cause a scram OR complicate/prohibit continued operation, enter 34AB-C71-001-1S, Scram Procedure, AND SCRAM the reactor.

4.2 IF RTP is <5%, attempt to restore main condenser vacuum with the mechanical vacuum pump, per 34SO-N61-001-1S, Main Condenser Vacuum System and Closeout.

4.3 Confirm proper Circ Water System operation. IF a single circulating pump has tripped and cannot be restarted enter 34AB-N71-001-1S, Loss of Circulating Water System AND 34SO-N71-001-1S, Circulating Water System, AND reduce reactor power per 34GO-OPS-005-1S, Power Changes to maintain a constant vacuum.

4.4 CONFIRM CLOSED 1N22-F058A & B, Condenser Vacuum Breakers at 1H11-P650 .

4.5 CONFIRM/START all available cooling tower fans per 34SO-W24-001-1N, Cooling Towers.

4.6 CONFIRM normal hotwell level and adjust level as necessary per 34SO-N21-007-1S, Condensate System.

4.7 IF Circulating Water dT exceeds ≥ 25 °F, maintain condenser vacuum ≥ 25" by reducing reactor power per 34GO-OPS-005-1S, Power Changes.

4.8 IF Circulating Waterbox dP's are erratic OR circ water suction bay has been <116', vent the waterboxes and Circ water pumps per 34SO-N71-001-1S, Circulating Water System. Notify I&C to vent condenser waterbox dP instrument lines.

4.9 IF inlet flow to holdup line is high, confirm proper operation of the SJAE in accordance with 34SO-N61-001-1S, Main Condenser Vacuum System and Closeout.

4.10 CONFIRM proper operation of the Steam Packing Exhauster per 34SO-N33-001-1S, Seal Steam System.

4.11 Verify 1G31-F034 (Disch to Main Cndsr) AND 1G31-F035 (Drain to Waste Coll Tnk) on panel 1H11-P602 are not open at the same time, if so, restore to proper lineup per 34SO-G31-003-1S, Reactor Water Cleanup System.

32. 295006G2.2.22 001

Unit 1 is operating at 100% RTP. The I & C Techs notify you at 0900 that "A" and "B" APRM's will not generate a scram signal until the reactor is at 122% RTP. Adjustments to the APRM's cannot be made for 24 hours.

Which ONE of the following describes the condition of the plant after the 24 hours has expired? (Provide copy of Tech Spec 3.3.1.1 conditions and SR's)

A. The Unit is in Mode 2 as required by Required Action F.1.

B. The Unit is in Mode 3 as required by Required Action G.1.

C. The Unit is <28% RTP as required by Required Action E.1.

D. The Unit is at 100% RTP with one APRM bypassed and the other APRM channel in trip.

Reference: Tech Spec section 3.3.1.1
Tech Spec table 3.3.1.1-1

A. Incorrect since this action would only be required if you cannot meet the Required Action of Condition A. This can be met by bypassing one APRM and placing the other APRM in trip.

B. Incorrect since Condition G would be entered if the APRM were INOPERABLE for the Inop function. They are Inop for the Neutron Flux-High function.

C. Incorrect since you would only go below 28% RTP if the problem was turbine related.

D. Correct answer. Bypass one APRM and then you can meet Condition A by placing the other APRM in trip. This maintains the unit at the current power level as long as you want.

RO Tier:		SRO Tier:	T1G1
Keyword:	SCRAM	Cog Level:	C/A 3.4/4.1
Source:	N	Exam:	HT02301
Test:	S	Misc:	TCK

64. 295006G2.2.22 001

Unit 1 is operating at 100% RTP. The Instrument Maintenace Techs notify you at 0900 that "A" and "B" APRM's will not generate a scram signal until the reactor is at 122% RTP. Adjustments to the APRM's cannot be made for 24 hours.

Which ONE of the following describes the condition of the plant after the 24 hours has expired?

A. The Unit is in Mode 2 as required by Required Action F.1.

B. The Unit is in Mode 3 as required by Required Action G.1.

C. The Unit is <28% RTP as required by Required Action E.1.

D. The Unit is at 100% RTP with one APRM bypassed and the other APRM channel in trip.

Reference: Tech Spec section 3.3.1.1
Tech Spec table 3.3.1.1-1

A. Incorrect since this action would only be required if you cannot meet the Required Action of Condition A. This can be met by bypassing one APRM and placing the other APRM in trip.

B. Incorrect since Condition G would be entered if the APRM were INOPERABLE for the Inop function. They are Inop for the Neutron Flux-High function.

C. Incorrect since you would only go below 28% RTP if the problem was turbine related.

D. Correct answer. Bypass one APRM and then you can meet Condition A by placing the other APRM in trip. This maintains the unit at the current power level as long as you want.

RO Tier:		SRO Tier:	T1G1
Keyword:	SCRAM	Cog Level:	C/A 3.4/4.1
Source:	N	Exam:	HT02301
Test:	S	Misc:	TCK

QUESTIONS REPORT
for HT2002

1. 295006G2.2.22 001

Unit 1 is operating at 100% RTP. The Instrument Maintenace Techs notify you at 0900 that "A" and "B" APRM's will not generate a scram signal until the reactor is at 122% RTP. Adjustments to the APRM's cannot be made for 24 hours.

Which ONE of the following describes the condition of the plant after the 24 hours has expired?

A. The Unit is in Mode 2 as required by Required Action F.1.

B. The Unit is in Mode 3 as required by Required Action G.1.

C. The Unit is <28% RTP as required by Required Action E.1.

D. The Unit is at 100% RTP with one APRM bypassed and the other APRM channel in trip.

Reference: Tech Spec section 3.3.1.1
Tech Spec table 3.3.1.1-1

A. Incorrect since this action would only be required if you cannot meet the Required Action of Condition A. This can be met by bypassing one APRM and placing the other APRM in trip.

B. Incorrect since Condition G would be entered if the APRM were INOPERABLE for the Inop function. They are Inop for the Neutron Flux-High function.

C. Incorrect since you would only go below 28% RTP if the problem was turbine related.

D. Correct answer. Bypass one APRM and then you can meet Condition A by placing the other APRM in trip. This maintains the unit at the current power level as long as you want.

3.3 INSTRUMENTATION

3.3.1.1 Reactor Protection System (RPS) Instrumentation

LCO 3.3.1.1 The RPS instrumentation for each Function in Table 3.3.1.1-1 shall be OPERABLE.

APPLICABILITY: According to Table 3.3.1.1-1.

ACTIONS

----------NOTE----------
Separate Condition entry is allowed for each channel.

CONDITION	REQUIRED ACTION		COMPLETION TIME
A. One or more required channels inoperable.	A.1	Place channel in trip.	12 hours
	OR		
	A.2	----------NOTE---------- Not applicable for Functions 2.a, 2.b, 2.c, 2.d, and 2.f. ---------- Place associated trip system in trip.	12 hours
B. ----------NOTE---------- Not applicable for Functions 2.a, 2.b, 2.c, 2.d, and 2.f. ---------- One or more Functions with one or more required channels inoperable in both trip systems.	B.1	Place channel in one trip system in trip.	6 hours
	OR		
	B.2	Place one trip system in trip.	6 hours

(continued)

ACTIONS (continued)

CONDITION	REQUIRED ACTION	COMPLETION TIME
C. One or more Functions with RPS trip capability not maintained.	C.1 Restore RPS trip capability.	1 hour
D. Required Action and associated Completion Time of Condition A, B, or C not met.	D.1 Enter the Condition referenced in Table 3.3.1.1-1 for the channel.	Immediately
E. As required by Required Action D.1 and referenced in Table 3.3.1.1-1.	E.1 Reduce THERMAL POWER to < 28% RTP.	4 hours
F. As required by Required Action D.1 and referenced in Table 3.3.1.1-1.	F.1 Be in MODE 2.	6 hours
G. As required by Required Action D.1 and referenced in Table 3.3.1.1-1.	G.1 Be in MODE 3.	12 hours
H. As required by Required Action D.1 and referenced in Table 3.3.1.1-1.	H.1 Initiate action to fully insert all insertable control rods in core cells containing one or more fuel assemblies.	Immediately

(continued)

ACTIONS (continued)

CONDITION	REQUIRED ACTION	COMPLETION TIME
I. As required by Required Action D.1 and referenced in Table 3.3.1.1-1.	I.1 Initiate alternate method to detect and suppress thermal-hydraulic instability oscillations.	12 hours
	AND	
	I.2 Restore required channels to OPERABLE.	120 days
J. Required Action and associated Completion Time of Condition I not met.	J.1 Be in MODE 2.	4 hours

SURVEILLANCE REQUIREMENTS

----------NOTES----------

1. Refer to Table 3.3.1.1-1 to determine which SRs apply for each RPS Function.

2. When a channel is placed in an inoperable status solely for performance of required Surveillances, entry into associated Conditions and Required Actions may be delayed for up to 6 hours provided the associated Function maintains RPS trip capability.

SURVEILLANCE		FREQUENCY
SR 3.3.1.1.1	Perform CHANNEL CHECK.	12 hours
SR 3.3.1.1.2	----------NOTE---------- Not required to be performed until 12 hours after THERMAL POWER ≥ 25% RTP. ---------- Verify the absolute difference between the average power range monitor (APRM) channels and the calculated power is ≤ 2% RTP while operating at ≥ 25% RTP.	7 days

(continued)

SURVEILLANCE REQUIREMENTS (continued)

SURVEILLANCE		FREQUENCY
SR 3.3.1.1.3	(Not used.)	
SR 3.3.1.1.4	----------NOTE---------- Not required to be performed when entering MODE 2 from MODE 1 until 12 hours after entering MODE 2. ---------- Perform CHANNEL FUNCTIONAL TEST.	7 days
SR 3.3.1.1.5	Perform CHANNEL FUNCTIONAL TEST.	7 days
SR 3.3.1.1.6	Verify the source range monitor (SRM) and intermediate range monitor (IRM) channels overlap.	Prior to withdrawing SRMs from the fully inserted position
SR 3.3.1.1.7	----------NOTE---------- Only required to be met during entry into MODE 2 from MODE 1. ---------- Verify the IRM and APRM channels overlap.	7 days
SR 3.3.1.1.8	Calibrate the local power range monitors.	1000 effective full power hours
SR 3.3.1.1.9	Perform CHANNEL FUNCTIONAL TEST.	92 days
SR 3.3.1.1.10	----------NOTE---------- For Function 2.a, not required to be performed when entering MODE 2 from MODE 1 until 12 hours after entering MODE 2. ---------- Perform CHANNEL FUNCTIONAL TEST.	184 days

(continued)

SURVEILLANCE REQUIREMENTS (continued)

SURVEILLANCE		FREQUENCY
SR 3.3.1.1.11	Verify Turbine Stop Valve - Closure and Turbine Control Valve Fast Closure, Trip Oil Pressure - Low Functions are not bypassed when THERMAL POWER is ≥ 28% RTP.	184 days
SR 3.3.1.1.12	Perform CHANNEL FUNCTIONAL TEST.	18 months
SR 3.3.1.1.13	----------NOTES---------- 1. Neutron detectors are excluded. 2. For Function 1, not required to be performed when entering MODE 2 from MODE 1 until 12 hours after entering MODE 2. ---------- Perform CHANNEL CALIBRATION.	18 months
SR 3.3.1.1.14	(Not used.)	
SR 3.3.1.1.15	Perform LOGIC SYSTEM FUNCTIONAL TEST.	18 months
SR 3.3.1.1.16	----------NOTE---------- Neutron detectors are excluded. ---------- Verify the RPS RESPONSE TIME is within limits.	18 months on a STAGGERED TEST BASIS

(continued)

SURVEILLANCE REQUIREMENTS (continued)

SURVEILLANCE		FREQUENCY
SR 3.3.1.1.17	Verify OPRM is not bypassed when APRM Simulated Thermal Power is ≥ 25% and recirculation drive flow is < 60% of rated recirculation drive flow.	18 months

Table 3.3.1.1-1 (page 1 of 3)
Reactor Protection System Instrumentation

FUNCTION	APPLICABLE MODES OR OTHER SPECIFIED CONDITIONS	REQUIRED CHANNELS PER TRIP SYSTEM	CONDITIONS REFERENCED FROM REQUIRED ACTION D.1	SURVEILLANCE REQUIREMENTS	ALLOWABLE VALUE
1. Intermediate Range Monitor					
a. Neutron Flux - High	2	3	G	SR 3.3.1.1.1 SR 3.3.1.1.4 SR 3.3.1.1.6 SR 3.3.1.1.7 SR 3.3.1.1.13 SR 3.3.1.1.15	≤ 120/125 divisions of full scale
	5(a)	3	H	SR 3.3.1.1.1 SR 3.3.1.1.5 SR 3.3.1.1.13 SR 3.3.1.1.15	≤ 120/125 divisions of full scale
b. Inop	2	3	G	SR 3.3.1.1.4 SR 3.3.1.1.15	NA
	5(a)	3	H	SR 3.3.1.1.5 SR 3.3.1.1.15	NA
2. Average Power Range Monitor					
a. Neutron Flux - High (Setdown)	2	3(c)	G	SR 3.3.1.1.1 SR 3.3.1.1.7 SR 3.3.1.1.8 SR 3.3.1.1.10 SR 3.3.1.1.13	≤ 20% RTP
b. Simulated Thermal Power - High	1	3(c)	F	SR 3.3.1.1.1 SR 3.3.1.1.2 SR 3.3.1.1.8 SR 3.3.1.1.10 SR 3.3.1.1.13	≤ 0.58 W + 58% RTP and ≤ 115.5% RTP(b)
c. Neutron Flux - High	1	3(c)	F	SR 3.3.1.1.1 SR 3.3.1.1.2 SR 3.3.1.1.8 SR 3.3.1.1.10 SR 3.3.1.1.13	≤ 120% RTP
d. Inop	1, 2	3(c)	G	SR 3.3.1.1.10	NA

(continued)

(a) With any control rod withdrawn from a core cell containing one or more fuel assemblies.

(b) 0.58 W + 58% - 0.58 ΔW RTP when reset for single loop operation per LCO 3.4.1, "Recirculation Loops Operating."

(c) Each APRM channel provides inputs to both trip systems.

Table 3.3.1.1-1 (page 2 of 3)
Reactor Protection System Instrumentation

FUNCTION	APPLICABLE MODES OR OTHER SPECIFIED CONDITIONS	REQUIRED CHANNELS PER TRIP SYSTEM	CONDITIONS REFERENCED FROM REQUIRED ACTION D.1	SURVEILLANCE REQUIREMENTS	ALLOWABLE VALUE
2. Average Power Range Monitor (continued)					
e. Two-out-of-Four Voter	1, 2	2	G	SR 3.3.1.1.1 SR 3.3.1.1.10 SR 3.3.1.1.15 SR 3.3.1.1.16	NA
f. OPRM Upscale	1	3(c)	I	SR 3.3.1.1.1 SR 3.3.1.1.8 SR 3.3.1.1.10 SR 3.3.1.1.13 SR 3.3.1.1.17	NA
3. Reactor Vessel Steam Dome Pressure - High	1, 2	2	G	SR 3.3.1.1.1 SR 3.3.1.1.9 SR 3.3.1.1.13 SR 3.3.1.1.15	≤ 1085 psig
4. Reactor Vessel Water Level - Low, Level 3	1, 2	2	G	SR 3.3.1.1.1 SR 3.3.1.1.9 SR 3.3.1.1.13 SR 3.3.1.1.15	≥ 0 inches
5. Main Steam Isolation Valve - Closure	1	8	F	SR 3.3.1.1.9 SR 3.3.1.1.13 SR 3.3.1.1.15	≤ 10% closed
6. Drywell Pressure - High	1, 2	2	G	SR 3.3.1.1.1 SR 3.3.1.1.9 SR 3.3.1.1.13 SR 3.3.1.1.15	≤ 1.92 psig
7. Scram Discharge Volume Water Level - High					
a. Resistance Temperature Detector	1, 2	2	G	SR 3.3.1.1.9 SR 3.3.1.1.13 SR 3.3.1.1.15	≤ 71 gallons
	5(a)	2	H	SR 3.3.1.1.9 SR 3.3.1.1.13 SR 3.3.1.1.15	≤ 71 gallons
b. Float Switch	1, 2	2	G	SR 3.3.1.1.13 SR 3.3.1.1.15	≤ 71 gallons
	5(a)	2	H	SR 3.3.1.1.13 SR 3.3.1.1.15	≤ 71 gallons

(continued)

(a) With any control rod withdrawn from a core cell containing one or more fuel assemblies.

(c) Each APRM channel provides inputs to both trip systems.

Table 3.3.1.1-1 (page 3 of 3)
Reactor Protection System Instrumentation

	FUNCTION	APPLICABLE MODES OR OTHER SPECIFIED CONDITIONS	REQUIRED CHANNELS PER TRIP SYSTEM	CONDITIONS REFERENCED FROM REQUIRED ACTION D.1	SURVEILLANCE REQUIREMENTS	ALLOWABLE VALUE
8.	Turbine Stop Valve - Closure	≥ 28% RTP	4	E	SR 3.3.1.1.9 SR 3.3.1.1.11 SR 3.3.1.1.13 SR 3.3.1.1.15	≤ 10% closed
9.	Turbine Control Valve Fast Closure, Trip Oil Pressure - Low	≥ 28% RTP	2	E	SR 3.3.1.1.9 SR 3.3.1.1.11 SR 3.3.1.1.13 SR 3.3.1.1.15 SR 3.3.1.1.16	≥ 600 psig
10.	Reactor Mode Switch - Shutdown Position	1, 2	1	G	SR 3.3.1.1.12 SR 3.3.1.1.15	NA
		5(a)	1	H	SR 3.3.1.1.12 SR 3.3.1.1.15	NA
11.	Manual Scram	1, 2	1	G	SR 3.3.1.1.5 SR 3.3.1.1.15	NA
		5(a)	1	H	SR 3.3.1.1.5 SR 3.3.1.1.15	NA

(a) With any control rod withdrawn from a core cell containing one or more fuel assemblies.

70. 295010AA2.06 001

A DBA LOCA has occurred on Unit 2 and the following conditions exist:

Drywell Pressure	51 psig and increasing at 2 psig/min
Reactor Water Level	-230 inches and increasing at 10"/min with RHR pumps
Bulk Drywell Temp	280°F
Torus Water Level	218" and increasing slowly

Which ONE of the following should be ordered by the Shift Supervisor?

A. Vent the Drywell IRRESPECTIVE of offsite radioligical release rates.

B. Vent the Torus IRRESPECTIVE of offsite radioligical release rates.

C. Spray the Drywell after verifying within Drywell Spray Initiation Limit.

D. Enter the Severe Accident Guidelines (SAG's).

Reference: PC-1 Primary Containment Control
Drywell Spray Initiation Limit (Graph 8)
(Consider providing PC-1 and Graph 8)

A. Incorrect since Torus water level is below 300".

B. Correct answer.

C. Incorrect since spraying the Drywell is not allowed since RWL is below Top of Active Fuel and RHR pumps are required to maintain adequate core cooling.

D. Incorrect since EOP's have direction to cover this situation.
Need to verify these answers with drawings.

RO Tier:		SRO Tier:	T1G1
Keyword:	DRYWELL PRESSURE	Cog Level:	C/A 3.6/3.6
Source:	B	Exam:	HT02301
Test:	S	Misc:	TCK

10. 295010AA2.06 001

A DBA LOCA has occurred on Unit 2 and the following conditions exist:

Drywell Pressure	51 psig and increasing at 2 psig/min
Reactor Water Level	-230 inches and increasing at 10"/min with RHR pumps
Bulk Drywell Temp	280 F
Torus Water Level	218" and increasing slowly

The Shift Supervisor SHOULD DIRECT:

A. Venting the Drywell IRRESPECTIVE of offsite radioligical release rate.

B. Venting the Torus IRRESPECTIVE of offsite radioligical release rate.

C. Spray the Drywell after verifying within Drywell Spray Initiation Limit (Graph 8).

D. Entering the Severe Accident Guidelines (SAG's).

Reference: PC-1 Primary Containment Control
Drywell Spray Initiation Limit (Graph 8)

A. Incorrect since Torus water level is below 300".

B. Correct answer.

C. Incorrect since spraying the Drywell is not allowed since RWL is below Top of Active Fuel and RHR pumps are required to maintain adequate core cooling.

D. Incorrect since EOP's have direction to cover this situation.
Need to verify these answers with drawings.

77. 295017G2.3.4 001

An event has occurred on Unit 1 that resulted in an individual getting injured. The individual is disabled and is in a 100 R/Hr field. An individual is standing by to save the disabled individuals life (He has NOT volunteered). The job will require being in the radiation field for 13 minutes. After conferring with HP Supervision the _____ has determined that _____ is the maximum amount of dose allowed per *73EP-EIP-017-0S, Emergency Exposure Control*, for this lifesaving attempt. (CHOOSE the answer that correctly fills in the blanks.)

A. Shift Supervisor, 10 Rem

B. Emergency Director, 10 Rem

C. Shift Supervisor, 25 Rem

D. Emergency Director, 25 Rem

References: Procedure 73EP-EIP-017-0S, Emergency Exposure Control pg 4 & 6 of 13.

A. Incorrect since the Emergency Director has the responsibility to make these decisions.

B. Incorrect since the maximum dose allowed without volunteering is 25 Rem.

C. Incorrect since the Emergency Director has the responsibility to make these decisions.

D. Correct answer.

RO Tier:		SRO Tier:	T1G1
Keyword:	EMERGENCY EXPOSURE	Cog Level:	C/A 2.5/3.1
Source:	N	Exam:	HT02301
Test:	S	Misc:	TCK

QUESTIONS REPORT
for HT2002

1. 295017G2.3.4 001

An event has occurred on Unit 1 that resulted in an individual getting hurt. The individual is disabled and is in a 100 R/Hr field. An individual is standing by to save the disabled individuals life (He has NOT volunteered). The job will require being in the radiation field for 13 minutes. After conferring with HP Supervision the _____ has determined that _____ is the maximum amount of dose allowed per 73EP-EIP-017-0S, Emergency Exposure Control, for this lifesaving attempt. (CHOOSE the answer that correctly fills in the blanks.)

A. Shift Supervisor, 10 Rem

B. Emergency Director, 10 Rem

C. Shift Supervisor, 25 Rem

D. Emergency Director, 25 Rem

References: Procedure 73EP-EIP-017-0S, Emergency Exposure Control pg 4 & 6 of 13.

A. Incorrect since the Emergency Director has the responsibility to make these decisions.

B. Incorrect since the maximum dose allowed without volunteering is 25 Rem.

C. Incorrect since the Emergency Director has the responsibility to make these decisions.

D. Correct answer.

REFERENCE

7.0 PROCEDURE

Emergency response personnel may receive exposure under a variety of circumstances in order to assure protection of others and of valuable property. These exposures will be justified if the risks permitted to the workers are acceptably low, AND the costs to others that are avoided by their actions outweigh the risks to which workers are subjected.

7.1 SAVING OF HUMAN LIFE

Where the potential risk of radiation hazard following the nuclear incident is such that life would be in jeopardy, or that there would be severe effects on the public health or loss of property detrimental to the public safety, the following criteria for saving of human life shall apply:

7.1.1 In consultation with HP supervision, the Emergency Director will evaluate the risks involved versus the benefits to be gained by considering the following:

7.1.1.1 The reliability of the prediction of radiation injury. Consideration must be given to limits of error associated with specific instruments AND techniques used to estimate the dose rate. This is especially crucial when the estimated dose approximates 100 REM or more.

7.1.1.2 Assessment of the capability of reducing inherent risks from the hazard through the use of appropriate mechanisms such as protective equipment, remote manipulation equipment or similar means.

7.1.1.3 The probable effects of acute exposure that may be incurred AND numerical estimates of the delayed effects. These effects are listed in Attachment 3, Emergency Worker Risks and Delayed Health Effects Associated With Large Doses of Radiation.

7.1.1.4 The probability of success of the emergency action.

7.1.2 Make exposure authorizations in accordance with subsection 7.4 Emergency Exposure Guidelines.

7.2 PROTECTION OF HEALTH AND PROPERTY

7.2.1 When the Emergency Director in consultation with HP supervision, deems it necessary to reduce a hazard OR potential hazard to acceptable levels to prevent a substantial loss of property, an exposure of up to, but not to exceed, 10 REM may be received by individuals participating in the operation.

7.4 EMERGENCY EXPOSURE GUIDELINES

7.4.1 The Emergency Director will establish the exposure limits for the emergency response personnel based on the following Emergency Response Personnel Exposure Guides:

NOTE

These guidelines do not establish a rigid upper limit of exposure. The Emergency Director may use his/her judgment in establishing the appropriate limit.

NOTE

No thyroid limit is specified for lifesaving action since the complete loss of the thyroid may be considered an acceptable risk for saving a life; however, thyroid exposure must be minimized through the use of respiratory protection and/or KI tablets.

EMERGENCY RESPONSE PERSONNEL EXPOSURE GUIDES

Dose Limit* (REM)	*Activity*	*Condition*
5	all	n/a
10	protecting valuable property	lower dose not practicable
25	life saving or protection of large populations	lower dose not practicable
>25	life saving or protection of large populations	only on a voluntary basis to persons fully aware of the risks involved

* This limit is expressed as the sum of the effective dose equivalent (EDE) and the committed effective dose equivalent (CEDE)

10. 295025EA2.04 001

Unit 2 Scrammed from High Drywell pressure due to a small leak in the Recirc piping. The following conditions currently exist:

Drywell pressure	3.5 psig (decreasing)
Drywell temperature	245°F (decreasing)
Torus level	185 inches (increasing)
Torus temperature	160°F (decreasing)
Reactor pressure	600 psig (decreasing)
Torus sprays and cooling	running

Based upon the above conditions the Shift Supervisor has determined that injection into the RPV from sources external to primary containment must be terminated.

Which ONE of the following identifies the systems that are EXEMPTED from termination?

A. Systems needed for adequate core cooling, boron injection and CRD.

B. Systems needed to shutdown the reactor, boron injection and CRD.

C. Systems needed for boron injection, CRD and RCIC.

D. Systems needed for adequate core cooling, fire fighting and boron injection.

References: PC-1 Primary Containment Control
Suppression Pool Level High
SRV Tail Pipe Level Limit (Graph 6)

A. Correct answer due to torus water level CANNOT be maintained below SRV Tail Pipe Level Limit (graph 6).

B. Incorrect since systems needed to shutdown the reactor are not exempted.

C. Incorrect since these systems are excepted when preventing all injection during an ATWS.

D. Incorrect since fire fighting systems are only excepted during SC Secondary Containment Control.

RO Tier:		SRO Tier:	T1G1
Keyword:	TORUS LEVEL	Cog Level:	C/A 3.9/3.9
Source:	N	Exam:	HT02301
Test:	S	Misc:	TCK

85. 295025EA2.04 001

Unit 2 Scrammed from High Drywell pressure due to a small leak in the Recirc piping. The following conditions currently exist:

Drywell pressure	3.5 psig (decreasing)
Drywell temperature	245°F (decreasing)
Torus level	185 inches (increasing)
Torus temperature	160°F (decreasing)
Reactor pressure	600 psig (decreasing)
Torus sprays and cooling	running

Based upon the above conditions the Shift Supervisor has determined that injection into the RPV from sources external to primary containment must be terminated.

Which ONE of the following identifies the systems that are EXEMPTED from termination?

A.✓ Systems needed for adequate core cooling, boron injection and CRD.

B. Systems needed for boron injection and CRD.

C. Systems needed for boron injection, CRD and RCIC.

D. Systems needed for adequate core cooling, fire fighting and boron injection.

References: PC-1 Primary Containment Control
Suppression Pool Level High
SRV Tail Pipe Level Limit (Graph 6)

A. Correct answer due to torus water level CANNOT be maintained below SRV Tail Pipe Level Limit (graph 6).

B. Incorrect since these systems are excepted per CP-2 RPV Flooding.

C. Incorrect since these systems are excepted when preventing all injection during an ATWS.

D. Incorrect since fire fighting systems are only excepted during SC Secondary Containment Control.

RO Tier:		SRO Tier:	T1G1
Keyword:	TORUS LEVEL	Cog Level:	C/A 3.9/3.9
Source:	N	Exam:	HT02301
Test:	S	Misc:	TCK

QUESTIONS REPORT
for HT2002

1. 295025EA2.04 001

Unit 2 Scrammed from High Drywell pressure due to a small leak in the Recirc piping. The following conditions currently exist:

Drywell pressure	3.5 psig (decreasing)
Drywell temperature	245 F (decreasing)
Torus level	185 inches (increasing)
Torus temperature	160 F (decreasing)
Reactor pressure	600 psig (decreasing)
Torus sprays and cooling	running

Based upon the above conditions the Shift Supervisor has determined that injection into the RPV from sources external to primary containment must be terminated. Which systems are EXCEPTED from termination?

A. Systems needed for adequate core cooling, boron injection and CRD.

B. Systems needed for boron injection and CRD.

C. Systems needed for boron injection, CRD and RCIC.

D. Systems needed for adequate core cooling, fire fighting and boron injection.

References: PC-1 Primary Containment Control
Suppression Pool Level High

A. Correct answer due to torus water level CANNOT be maintained below SRV Tail Pipe Level Limit (graph 6).

B. Incorrect since these systems are excepted per CP-2 RPV Flooding.

C. Incorrect since these systems are excepted when preventing all injection during an ATWS.

D. Incorrect since fire fighting systems are only excepted during SC Secondary Containment Control.

IF RCIC or HPCI is operating
THEN defeat high torus water level suction transfer logic per 31EO-EOP-100-2S

PERFORM CONCURRENTLY

Maintain torus water level below SRV Tail Pipe Level Limit (Graph 6) per 34SO-E11-010-2S or 34GO-OPS-087-2S

WAIT UNTIL
torus water level CANNOT be maintained below SRV Tail Pipe Level Limit (Graph 6)

PERFORM CONCURRENTLY
RC[A] point A

WAIT UNTIL
torus water level
AND
reactor pressure
CANNOT be maintained below SRV Tail Pipe Level Limit (Graph 6)

Terminate injection into RPV from sources external to primary containment EXCEPT systems required for:

- adequate core cooling
- boron injection
- CRD

WAIT UNTIL
torus water level
AND
reactor pressure
CANNOT be restored and maintained below SRV Tail Pipe Level Limit (Graph 6)

EMERGENCY DEPRESS IS REQUIRED

Maintain torus water level below 215 in. per 34SO-E11-010-2S or 34GO-OPS-087-2S

WAIT UNTIL
torus water level CANNOT be maintained below 215 in.

Terminate drywell sprays
AND
Terminate injection into RPV from sources external to primary containment EXCEPT systems required for:

- adequate core cooling
- boron injection
- CRD

WAIT UNTIL
torus water level CANNOT be maintained below 300 in.

Determine primary containment water level per 31EO-EOP-105-2S

IF primary contai
and torus pres
maintained be
Pressure Limit

IF drywell spray
AN
BEFORE dr

NOTE 9

GRAPH 6

UNIT 1

SRV TAIL PIPE LEVEL LIMIT

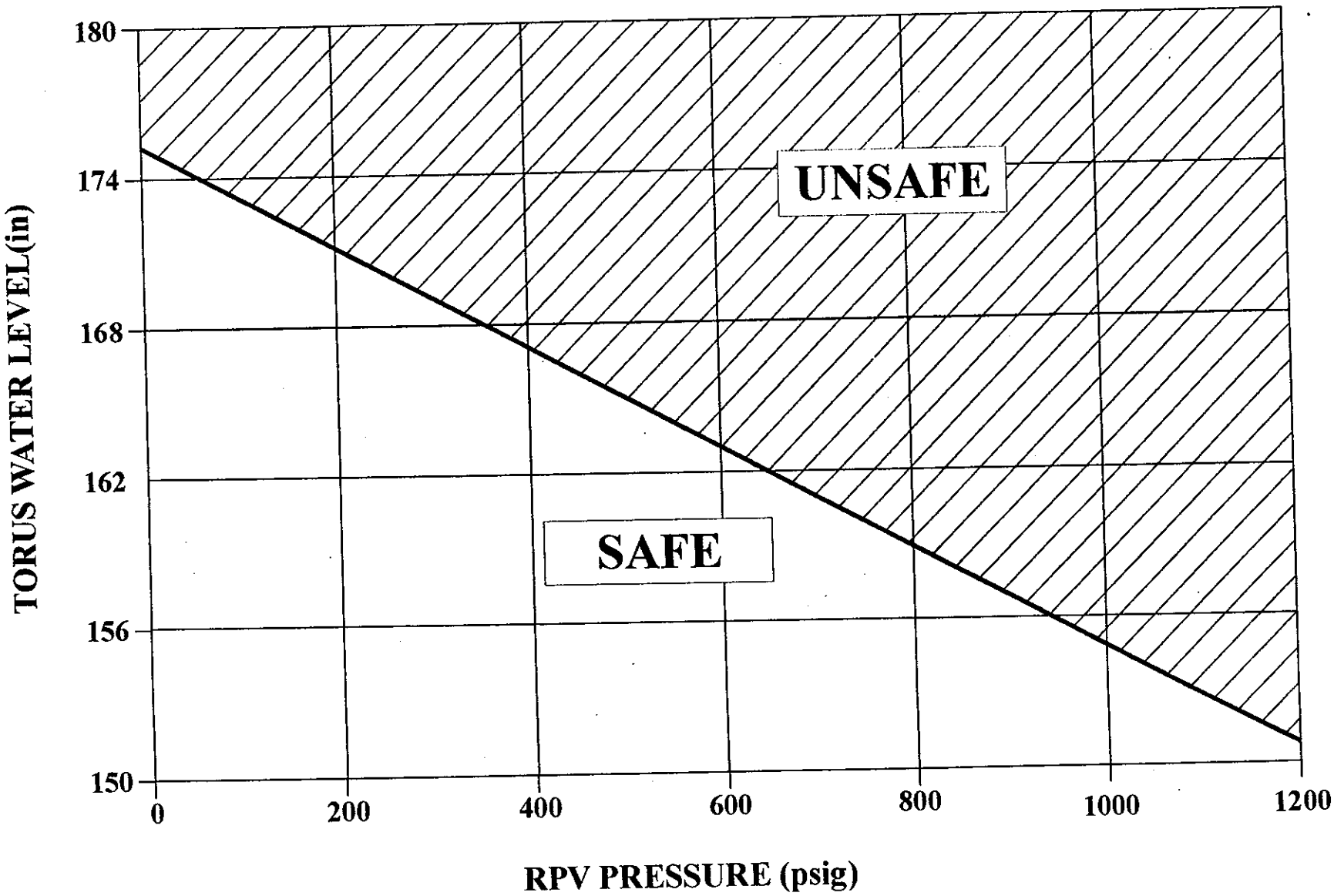

NOTE: M SPDS Emergency Displays in place of this Graph.

33. 295030EA2.01 001

Unit 2 has developed a leak in the Torus and the Shift Supervisor has entered PC-1 Primary Containment Control. Mechanical Maintenance and Health Physics have been dispatched to investigate and repair the leak. Mechanical Maintenance has reported that the leak should be stopped in approximately 30 minutes. Torus level is currently at 120" and is dropping at a rate of 1" per minute.

Which ONE of the following should be directed by the Shift Supervisor?

A. wait until Torus level drops to 110" and order HPCI tripped.

B. wait until Torus level drops to 98" and order Emergency Depressurization per CP-1.

C. order HPCI tripped and depressurize reactor through the Main Turbine Bypass Valves irrespective of cooldown rate.

D. order HPCI tripped and depressurize reactor through the Main Turbine Bypass valves without exceeding a 100°F/hr cooldown rate.

References: LR-LP-20310 Rev. 05 pg. 20 - 23 of 96
RC RPV CONTROL (NON-ATWS)
PC-1 PRIMARY CONTAINMENT CONTROL

A. Incorrect since actions should be taken before they are hit if the trend indicates that the limit will be met.

B. Incorrect since actions should be taken before they are hit if the trend indicates that the limit will be met.

C. Correct answer.

D. Incorrect since it is acceptable to exceed the 100 F/hr cooldown rate when you anticipate blowdown per overide in PC RPV Control (Non-ATWS).

RO Tier:		SRO Tier:	T1G1
Keyword:	TORUS LEVEL	Cog Level:	C/A 4.1/4.2
Source:	N	Exam:	HT02301
Test:	S	Misc:	TCK

89. 295030EA2.01 001

Unit 2 has developed a leak in the Torus and the Shift Supervisor has entered PC-1 Primary Containment Control. Mechanical Maintenance and Rad Protection have been dispatched to investigate and repair the leak. Mechanical Maintenance has reported that the leak should be stopped in approximately 30 minutes. Torus level is currently at 120" and is dropping at a rate of 1" per minute.

Which ONE of the following should be directed by the Shift Supervisor?

A. wait until Torus level drops to 110" and order HPCI tripped.

B. wait until Torus level drops to 98" and order Emergency Depressurization per CP-1.

C. order HPCI tripped and depressurize reactor through the Main Turbine Bypass Valves irrespective of cooldown rate.

D. order HPCI tripped and depressurize reactor through the Main Turbine Bypass valves without exceeding a 100°F/hr cooldown rate.

References: LR-LP-20310 Rev. 05 pg. 20 - 23 of 96
RC RPV CONTROL (NON-ATWS)
PC-1 PRIMARY CONTAINMENT CONTROL

A. Incorrect since actions should be taken before they are hit if the trend indicates that the limit will be met.

B. Incorrect since actions should be taken before they are hit if the trend indicates that the limit will be met.

C. Correct answer.

D. Incorrect since it is acceptable to exceed the 100 F/hr cooldown rate when you anticipate blowdown per overide in PC RPV Control (Non-ATWS).

RO Tier:		SRO Tier:	T1G1
Keyword:	TORUS LEVEL	Cog Level:	C/A 4.1/4.2
Source:	N	Exam:	HT02301
Test:	S	Misc:	TCK

QUESTIONS REPORT
for HT2002

1. 295030EA2.01 001

Unit 2 has developed a leak in the Torus and the Shift Supervisor has entered PC-1 Primary Containment Control. Mechanical Maintenance and Rad Protection have been dispatched to investigate and repair the leak. Mechanical Maintenance has reported that the leak should be stopped in approximately 30 minutes. Torus level is currently at 120" and is dropping at a rate of 1" per minute. The Shift Supervisor should:

A. wait until Torus level drops to 110" and order HPCI tripped.

B. wait until Torus level drops to 98" and order Emergency Depressurization per CP-1.

C. order HPCI tripped and depressurize reactor through the Main Turbine Bypass Valves irrespective of cooldown rate.

D. order HPCI tripped and depressurize reactor through the Main Turbine Bypass valves without exceeding a 100 F/hr cooldown rate.

References: LR-LP-20310 Rev. 05 pg. 20 - 23 of 96
RC RPV CONTROL (NON-ATWS)
PC-1 PRIMARY CONTAINMENT CONTROL

A. Incorrect since actions should be taken before they are hit if the trend indicates that the limit will be met.

B. Incorrect since actions should be taken before they are hit if the trend indicates that the limit will be met.

C. Correct answer.

D. Incorrect since it is acceptable to exceed the 100 F/hr cooldown rate when you anticipate blowdown per overide in PC RPV Control (Non-ATWS).

PERFORM CONCURRENTLY

Maintain torus water level
above 98 in. per 34SO-E21-001-2S
or 34GO-OPS-087-2S

Maintain torus water level
above 110 in. per 34SO-E21-001-2S
or 34GO-OPS-087-2S

Q: Why are these paths concurrent and not in series?

The two paths for the low level condition direct control of torus water level relative to the **elevation of the downcomer openings** and the **elevation of the top of the HPCI exhaust line,** respectively.

A: As level decreases, HPCI would need to be secured, however, the plant would not necessarily need to be depressurized.

Therefore, these two paths must be executed in parallel since the actions required in one path may or may not have to be accomplished at the same time as the actions in the other path.

HPCI PATH WILL BE DISCUSSED LATER

98" is the elevation of the downcomer openings

WAIT UNTIL

torus water level
CANNOT be maintained
above 98in.

PRIOR to torus level dropping below 98", the RPV should be depressurized.

The RPV is not permitted to remain at pressure if suppression of steam discharged from the RPV into the drywell cannot be assured. When the downcomer vent openings are not adequately submerged, any steam discharged from the RPV into the drywell may not condense in the torus before torus pressure reaches unacceptable levels.

Emergency RPV depressurization will be required at or before the point at which this low water level condition occurs (98in.).

NOTE: Results of the Bodega Bay Mark I containment tests indicate 95% steam condensation may be achieved from a vertical downcomer vent that discharges at a level six inches above the torus surface.

At this point, if the torus level is above 98", there is no need for emerg depressurization.

As long as torus water level remains at or above the elevation of the downcomer vent openings, the need to emergency depressurize the RPV due to torus heatup is dictated by the Heat Capacity Temperature Limit. *Actions associated with the Heat Capacity Temperature will be discussed in the SP/T path.*

PERFORM CONCURRENTLY
RC[A] point A

Stress that if torus level cannot be prevented from decreasing to 98 inches, enter the RC flowchart.

The determination that torus level cannot be maintained above 98 inches should be made **BEFORE** reaching the actual limit based on level trend or other plant conditions.

In other words, the operator should **ANTICIPATE** the need to perform RC[A] and enter the correct chart.

EO 9
ASK What does entering RC flowchart accomplish ?

Entering either RC or RCA at point "A" assures that, if possible, the reactor is scrammed and shutdown by control rod insertion before RPV depressurization is initiated.

EO 10

Directing that the RPV Control EOP be entered, rather than explicitly stating here "Initiate a reactor scram," coordinates actions currently being executed if the RPV Control has already been entered. (Note that the RPV Control requires initiating a reactor scram only if one has not previously been initiated.)

ASK How is the Emergency Depressurization Flowchart CP-1 reached ?

- In addition, entry into RC or RCA must be made because it is through these flowcharts that the transfer to the "Emergency RPV Depressurization" contingency is effected.

EMERGENCY DEPRESS IS REQUIRED

EO 11
Discuss reason for Emerg RPV Depressurization if unable to maintain above 98inches.

Depressurizing the RPV when torus water level cannot be maintained above 98 inches is done to prevent failure of the containment or equipment necessary for the safe shutdown of the plant.

The RPV is not permitted to remain at pressure if suppression of steam discharged from the RPV cannot be assured.

Depressurizing the RPV ensures steam can be condensed while adequate water level exists.

Therefore the vessel is depressurized while the torus can still support a blow down and places the RPV in the lowest possible energy state.

This precludes the possibility of a primary containment failure and the resultant uncontrolled radioactivity release.

- This override flag **DOES NOT** direct the operator to leave the SP/L flow path.

EO 12

- The override flag **DOES** direct the operator to exercise the EMERGENCY DEPRESSURIZATION IS REQUIRED overrides in all other flow paths that are currently being performed, especially the override on the RC[A] pressure path that directs the operator to the Emergency Depressurization path on CP-1.

HPCI PATH WILL NOW BE DISCUSSED

PERFORM CONCURRENTLY

Maintain torus water level
above 110 in per 34SO-E21-001-2S or
34GO-OPS-087-2S

WAIT UNTIL

torus water level
CANNOT be maintained
above 110 in.

EO 13

If level decreases < 110 inches, the torus air space will be directly pressurized with HPCI running.

The torus level needs to be maintained above the discharge of the HPCI steam turbine exhaust line to ensure adequate steam condensing. This precludes possible primary containment failure due to over pressurization caused by HPCI steam exhaust discharging directly into the torus air space.

EO 14

HPCI is secured and prevented from operating (PTL) even if needed to maintain RWL

The determination that the torus level cannot be maintained above 110 inches **CAN BE MADE BEFORE** reaching the actual limit based on trend or other plant conditions. As soon as this determination is made, the operator proceeds to the next step and secures HPCI.

Trip and prevent operation of HPCI irrespective of adequate core cooling

Operation of the HPCI System with its exhaust discharge line (located at 110 in.) not submerged will directly pressurize the torus air space.

HPCI Aux Oil Pump is placed in PTL.

HPCI operation is therefore secured, *and prevented from restarting*, to preclude the occurrence of this condition.

ASK Why must HPCI be tripped at 110" "?

The consequences of not doing so may extend to failure of the primary containment from over pressurization, and thus HPCI must be secured irrespective of adequate core cooling concerns.

No instruction regarding RCIC operation is included in this step (or in an equivalent step) for two reasons:

ASK Why is RCIC operation is allowed ?

1. The exhaust flow rate of RCIC is approximately equal to that of decay heat, and is thus consistent with the basis used for determining the Primary Containment Pressure Limit.

HPCI exhaust press trip approx 140 psig where as RCIC is about 40 psig.

2. Elevated torus pressure will cause the RCIC turbine to trip much sooner than the HPCI turbine.

RC RPV CO

A condition which requires reactor s
and reactor power is above 5%

RWL below + 3 in.

A

IF PRIMARY CON
IS OR HAS BE

IF ALL control roc
or beyond posi

control rods ar
shutdown rod

RC/P

2

WHILE PERFORMING THE FOLLOWING			
IF	Emergency Depress is anticipated, EXCEPT for low RWL	THEN	rapidly depress with main turbine bypass valves, irrespective of the resulting cooldown rate.
IF	EMERGENCY DEPRESS IS, OR HAS BEEN, REQUIRED	THEN	perform Emergency Depress
IF	RWL CANNOT be determined	THEN	perform RPV Flooding
IF	drywell pressure is above 1.85 psig	THEN	prevent injection from CS and LPCI pumps per 31EO-EOP-114-2S

B

C

D

PC/G

SP/L

NOTE 2
If fuel failure is suspected consult with Plant Chemistry prior to discharging water

GO TO ANY entry condition on PC-2

Monitor and control torus water level between 146 in. and 150 in. using:
- CS for low water levels per 34SO-E21-001-2S
- RHR for high water levels per 34SO-E11-010-2S

WAIT UNTIL
torus water level CANNOT be maintained between 146 in. and 150 in.

Is torus water level below 146 in. or above 150 in.

BELOW 146

ABOVE 15

PERFORM CONCURRENTLY

Maintain torus water level above 98 in. per 34SO-E21-001-2S or 34GO-OPS-087-2S

WAIT UNTIL
torus water level CANNOT be maintained above 98 in.

PERFORM CONCURRENTLY
RC[A] point A

EMERGENCY DEPRESS IS REQUIRED

Maintain torus water level above 110 in. per 34SO-E21-001-2S or 34GO-OPS-087-2S

WAIT UNTIL
torus water level CANNOT be maintained above 110 in.

Trip and prevent operation of HPCI irrespective of adequate core cooling

34. 295031G2.4.4 001

Unit 1 is operating at 100% power when a leak in the Drywell develops. Reactor water level is trending down and Drywell pressure, temperature and level are trending upward. The SRO orders a reactor SCRAM with the following conditions occuring:

RWL initially reaches +2" and stabilizes at +15"
Drywell pressure reaches 1.83 psig and stabilizes
Drywell temperature currently at 147°F and rising slowly
Torus level currently at 148" and rising slowly
Reactor pressure at 920 psig and steady
6 control rods stuck at position 02 and all others fully inserted

Which ONE of the following actions are required by the Shift Supervisor under these conditions?

A. Enter RCA RPV Control (ATWS) and take actions to ensure reactor stays shutdown under all conditions.

B. Enter PC-1 and PC-2 and take actions to prevent reaching entry conditions.

C. Enter RC RPV Control (Non-ATWS) and take actions to stabilize plant.

D. Entry into EOP's not required since an entry condition does not exist at this time. *34AB-C71-001-2S, Scram Procedure* is entered.

References: LR-20308 Entry Conditions
LR-20310 Entry Conditions
LR-20328 ATWS Conditions

A. Incorrect answer. Does not meet conditions for ATWS. All rods are at position 02 or beyond.

B. Incorrect answer. Does not meet entry conditions yet. Not appropriate to take actions to prevent meeting entry conditions.

C. Correct answer.

D. Incorrect answer. EOP entry is required since conditions were previously met. RWL <+3".

QUESTIONS REPORT
for Revision2 HT2002

RO Tier:		SRO Tier:	T1G1
Keyword:	EOP RPV CONTROL	Cog Level:	C/A 4.0/4.3
Source:	N	Exam:	HT02301
Test:	S	Misc:	TCK

91. 295031G2.4.4 001

Unit 1 is operating at 100% power when a leak in the Drywell develops. Reactor water level is trending down and Drywell pressure, temperature and level are trending upward. The SRO orders a reactor SCRAM with the following conditions occuring:

RWL innitially reaches +2" and stabilizes at +15"
Drywell pressure reaches 1.83 psig and stabilizes
Drywell temperature currently at 147°F and rising slowly
Torus level currently at 148" and rising slowly
Reactor pressure at 920 psig and steady
6 control rods stuck at position 02 and all others fully inserted

Which ONE of the following actions are required by the Shift Supervisor under these conditions?

A. Enter RCA RPV Control (ATWS) and take actions to ensure reactor stays shutdown under all conditions.

B. Enter PC-1 and PC-2 and take actions to prevent reaching entry conditions.

C. Enter RC RPV Control (Non-ATWS) and take actions to stabilize plant.

D. Entry into EOP's not required since an entry condition does not exist at this time. *34AB-C71-001-2S, Scram Procedure* is entered.

References: LR-20308 Entry Conditions
LR-20310 Entry Conditions
LR-20328 ATWS Conditions

A. Incorrect answer. Does not meet conditions for ATWS. All rods are at position 02 or beyond.

B. Incorrect answer. Does not meet entry conditions yet. Not appropriate to take actions to prevent meeting entry conditions.

C. Correct answer.

D. Incorrect answer. EOP entry is required since conditions were previously met. RWL <+3".

QUESTIONS REPORT
for HT2002

RO Tier:		SRO Tier:	T1G1
Keyword:	EOP RPV CONTROL	Cog Level:	C/A 4.0/4.3
Source:	N	Exam:	HT02301
Test:	S	Misc:	TCK

14. 295031G2.4.4 001

Unit 1 is operating at 100% power when a leak in the Drywell develops. Reactor water level is trending down and Drywell pressure, temperature and level are trending upward. The SRO orders a reactor SCRAM with the following conditions occuring:

RWL innitially reaches +2" and stabilizes at +15"
Drywell pressure reaches 1.83# and stabilizes
Drywell temperature currently at 147 F and rising slowly
Torus level currently at 148" and rising slowly
Reactor pressure at 920# and steady
6 control rods stuck at position 02 and all others fully inserted

What actions are required by the Shift Supervisor under these conditions?

A. Enter RCA RPV Control (ATWS) and take actions to ensure reactor stays shutdown under all conditions.

B. Enter PC-1 and PC-2 and take actions to prevent reaching entry conditions.

C. Enter RC RPV Control (Non-ATWS) and take actions to stabilize plant.

D. Entry into EOP's not required since an entry condition does not exist at this time.

References: LR-20308 Entry Conditions
LR-20310 Entry Conditions
LR-20328 ATWS Conditions

A. Incorrect answer. Does not meet conditions for ATWS. All rods are at position 02 or beyond.

B. Incorrect answer. Does not meet entry conditions yet. Not appropriate to take actions to prevent meeting ~~Correct answer~~.entry conditions.

C. Correct answer.

D. Incorrect answer. EOP entry is required since conditions were previously met. RWL <+3".

35. 295033G2.3.10 001

Unit 1 is operating at 100% RTP. The Fuel Movement Team is moving fuel bundles in the Unit 1 Fuel Pool to get ready for an upcoming outage. There is a malfunction associated with the mast and a fuel bundle is dropped in the pool. This caused some fuel pins to break and radiation levels are increasing on the Refuel Floor and around the Fuel Pool pumps. The following radiation levels exist on Unit 1:

Refuel Floor	1500 mR/hr
Spent Fuel Pool Demin Equip	2000 mR/hr
Fuel Pool Demin Panel	75 mR/hr

Which ONE of the following actions should the Shift Supervisor order?
(Provide copy of Unit 1 SC-Secondary Containment Control)

A. Scram the reactor and evacuate the Reactor Building per *73EP-RAD-001-0S, Radiological Event.*

B. ✓ Commence a Normal Unit Shutdown and evacuate the associated High Rad areas.

C. Scram the reactor and commence a Reactor Blowdown per the EOP's.

D. Announce the High Rad condition over the public address system and evacuate the affected areas. Reactor operation should not be affected.

References: 73EP-RAD-001-0S, Radiological Event Rev. 1.1 pg 4 of 7
SC - SECONDARY CONTAINMENT CONTROL

A. Incorrect since a reactor scram is not required by the EOP's.

B. Correct answer.

C. Incorrect, a reactor blowdown is not required since there is not a primary system discharging into secondary containment.

D. Incorrect since the reactor should be shutdown per the EOP's.

RO Tier:		SRO Tier:	T1G2
Keyword:	EOP PC CONTROL	Cog Level:	C/A 2.9/3.3
Source:	N	Exam:	HT02301
Test:	S	Misc:	TCK

93. 295033G2.3.10 001

Unit 1 is operating at 100% RTP. The Fuel Handlers are moving fuel bundles in the Unit 1 Fuel Pool to get ready for an upcoming outage. There is a malfunction associated with the mast and a fuel bundle is dropped in the pool. This caused some fuel pins to break and radiation levels are increasing on the Refuel Floor and around the Fuel Pool pumps. The following radiation levels exist on Unit 1:

Refuel Floor	1500 mR/hr (Max Safe Operating value = 1000 mR/hr))
Spent Fuel Pool Demins	2000 mR/hr (Max Safe Operating value = 1000 mR/hr)
Fuel Pool Demin Panel	75 mR/hr (Max Normal Operating value = 50 mR/hr)

Which ONE of the following actions should the Shift Supervisor order?

A. Scram the reactor and evacuate the Reactor Building per *73EP-RAD-001-0S, Radiological Event.*

B. Commence a Normal Unit Shutdown and evacuate the associated High Rad areas.

C. Scram the reactor and commence a Reactor Blowdown per the EOP's.

D. Announce the High Rad condition over the public address system and evacuate the affected areas. Reactor operation should not be affected.

References: 73EP-RAD-001-0S, Radiological Event Rev. 1.1 pg 4 of 7
SC - SECONDARY CONTAINMENT CONTROL

A. Incorrect since a reactor scram is not required by the EOP's.

B. Correct answer.

C. Incorrect, a reactor blowdown is not required since there is not a primary system discharging into secondary containment.

D. Incorrect since the reactor should be shutdown per the EOP's.

RO Tier:		SRO Tier:	T1G2
Keyword:	EOP PC CONTROL	Cog Level:	C/A 2.9/3.3
Source:	N	Exam:	HT02301
Test:	S	Misc:	TCK

QUESTIONS REPORT
for HT2002

1. 295033G2.3.10 001

Unit 1 is operating at 100% RTP. The Fuel Handlers are moving fuel bundles in the Unit 1 Fuel Pool to get ready for an upcoming outage. There is a malfunction associated with the mast and a fuel bundle is dropped in the pool. This causes some fuel pins to break and radiation levels are going up on the Refuel Floor and around the Fuel Pool pumps. The following radiation levels exist on Unit 1:

Refuel Floor	1500 mR/hr (Max Safe Operating value = 1000 mR/hr))
Spent Fuel Pool Demins	2000 mR/hr (Max Safe Operating value = 1000 mR/hr)
Fuel Pool Demin Panel	75 mR/hr (Max Normal Operating value = 50 mR/hr)

The Shift Supervisor should:

A. Order the Control Board Operator to Scram the reactor and evacuate the Reactor Building per 73EP-RAD-001-0S, Radiological Event.

B. Order the Control Board Operator to commence a Normal Unit Shutdown and evacuate the associated High Rad areas.

C. Order the Control Board Operator to Scram the reactor and commence a Reactor Blowdown per the EOP's.

D. Have the Control Board Operator announce the High Rad condition over the public address system and evacuate the affected areas. Reactor operation should not be affected.

References: 73EP-RAD-001-0S, Radiological Event Rev. 1.1 pg 4 of 7
SC - SECONDARY CONTAINMENT CONTROL

A. Incorrect since a reactor scram is not required by the EOP's.

B. Correct answer.

C. Incorrect, a reactor blowdown is not required since there is not a primary system discharging into secondary containment.

D. Incorrect since the reactor should be shutdown per the EOP's.

REFERENCE

7.0 PROCEDURE

7.1 INVOLVED PERSONNEL

> **CAUTION**
>
> PERSONNEL MUST NOT BE SENT INTO AN AREA OF UNKNOWN RADIATION CONDITIONS WITHOUT HP COVERAGE, DOSIMETRY AND APPROPRIATE PROTECTIVE EQUIPMENT.

7.1.1 Control Room Personnel

Upon determining that a Radiological Event has occurred, the Shift Supervisor will perform the following actions:

7.1.1.1 Direct the Control Room Operator to make the following announcement over the public address system:

A RADIOLOGICAL EVENT IS OCCURRING. ABOVE NORMAL RADIATION (OR AIRBORNE RADIOACTIVITY) EXISTS IN THE ___(location)___ AREA. EVACUATE AND STAY CLEAR OF THE ___(location)___ AREA(S).

7.1.1.2 Direct the Control Room Operator to repeat the announcement a second time.

7.1.1.3 Contact the Health Physics Office to assist in investigating the condition. Inform HP of the indicated dose rate of the area, IF the event was initiated due to an alarming ARM, and any other pertinent information, e.g., dropped fuel bundle, indication of leak, etc..

7.1.1.4 Attempt to confirm accuracy of alarmed ARMs and effluent monitors by directing that the status of ARMs and effluent monitors near or associated with incident area be checked for recent or sudden change.

7.1.1.5 Check habitability of Control Room by observing radiation monitors OR possible automatic isolation of control room ventilation.

7.1.1.6 Ensure that START HIST (history) light on the SPDS keyboard is ILLUMINATED; if not, simultaneously DEPRESS the CTRL and START HIST keys. Cancel or continue history as directed by the SOS.

7.1.1.7 Observe Control Room instrumentation and controls. Implement corrective action to eliminate cause of this abnormal condition, IF possible, from the Control Room.

HVAC Isolation
- Unit 1 and Unit 2 Refuel Floor HVAC isolation
- Unit 1 and Unit 2 SBGT initiation

per 34AB-T22-003-1S

THEN restart Refuel Floor HVAC per 34SO-T41-006-1S
If necessary defeat high drywell pressure
AND
VL isolation interlocks
EO-EOP-100-1S

THEN restart Reactor Building HVAC per 34SO-T41-005-1S
If necessary defeat high drywell pressure
AND
low RWL isolation interlocks
per 31EO-EOP-100-1S

ONCURRENTLY

/L

NTIL
following
ve
erating Water Level
e 5):
n sump water level
ter level

ump pumps to restore
level below Maximum
Water Level (Table 5)

ng CANNOT be
ained below Maximum
Water Level (Table 5):
in sump water level
ter level

ems discharging water
ea EXC stems
uate co ing
eactor
e
mary containment

NCURRENTLY

WAIT UNTIL
area water level
is above
Maximum Safe Operating Water Level
in more than one area
(Table 5)

Shut down reactor per 34GO-OPS-013-1S
or 34GO-OPS-014-1S

SC/R

WAIT UNTIL
area radiation level
is above
Maximum Normal Operating Radiation Level
(Table 6)

Isolate ALL systems discharging into area
EXCEPT systems required to:
- assure adequate core cooling
- shut down reactor
- suppress fire
- maintain primary containment integrity

PERFORM CONCURRENTLY

WAIT UNTIL
primary system
is discharging reactor coolant
into secondary containment
(Table 7)

WAIT UNTIL
area radiation level
is above
Maximum Safe Operating Radiation Level
in more than one area
(Table 6)

Shut down reactor per 34GO-OPS-013-1S
or 34GO-OPS-014-1S

BEFORE
ANY area radiation level reaches
Maximum Safe Operating Radiation Level
(Table 6)

PERFORM CONCURRENTLY
RC(A) point A

WAIT UNTIL
area radiation level
is above
Maximum Safe Operating Radiation Level
in more than one area
(Table 6)

EMERGENCY DEPRESS IS REQUIRED

RR - RADIOACTIVITY RELEASE CONTROL

Offsite radioactivity release rate
above 0.57 mR/hr

WHILE PERFORMING THE FOLLOWING

IF PRIMARY CONTAINMENT FLOODING THEN exit the EOPs and enter the

B C D E F

36. 295034EA2.02 001

Which ONE of the following conditions would most likely cause a Secondary Containment Ventilation High Radiation isolation?

A. A leak has developed on the RHRSW side of the RHR Heat Exchanger and the water level in the room is approximately 1/2" deep.

B. A Recirc Pump seal failure which causes Drywell Pressure to exceed 1.85 psig.

C. The packing is blown on a Startup Level Control Valve (SULCV) and the area is blanketed in steam.

D. A leak has developed upstream of the HPCI Stop Valve but it is not large enough to cause a high temperature isolation of HPCI.

References: SI-LP-01303 Rev. SI-00, Figures 10.

A. Incorrect since the RHRSW side of the HX is not highly radioactive.

B. Incorrect since the drywell will contain the Recirc Pump seal leakage.

C. Incorrect since the feedwater reg valve is in the turbine building.

D. Correct answer since this steam leak is directly off of main steam and has the potential of being highly radioactive.

RO Tier:		SRO Tier:	T1G2
Keyword:	SECONDARY CONTAIN	Cog Level:	C/A 3.7/4.2
Source:	N	Exam:	HT02301
Test:	S	Misc:	TCK

94. 295034EA2.02 001

Which ONE of the following conditions would most likely cause a Secondary Containment Ventilation High Radiation isolation?

A. A leak has developed on the RHRSW side of the RHR Heat Exchanger and the water level in the room is approximately 1/2" deep.

B. A Recirc Pump seal failure which causes Drywell Pressure to exceed 1.85 psig.

C. The packing is blown on a Feedwater Reg Valve and the area is blanketed in steam.

D. A leak has developed upstream of the HPCI Stop Valve but it is not large enough to cause a high temperature isolation of HPCI.

References: SI-LP-01303 Rev. SI-00, Figures 10.

A. Incorrect since the RHRSW side of the HX is not highly radioactive.

B. Incorrect since the drywell will contain the Recirc Pump seal leakage.

C. Incorrect since the feedwater reg valve is in the turbine building.

D. Correct answer since this steam leak is directly off of main steam and has the potential of being highly radioactive.

RO Tier:		SRO Tier:	T1G2
Keyword:	SECONDARY CONTAIN	Cog Level:	C/A 3.7/4.2
Source:	N	Exam:	HT02301
Test:	S	Misc:	TCK

QUESTIONS REPORT
for HT2002

1. 295034EA2.02 001

SELECT the condition that would most likely cause a Secondary Containment Ventilation High Radiation isolation.

A. A leak has developed on the RHRSW side of the RHR Heat Exchanger and the water level in the room is approximately 1/2" deep.

B. A firemain leak has developed in the CRD repair area on Unit 1 and is draining into the floor drains.

C. The packing is blown on a Feedwater Reg Valve and the area is blanketed in steam.

D. A leak has developed upstream of the HPCI Stop Valve but it is not large enough to cause a high temperature isolation of HPCI.

References: SI-LP-01303 Rev. SI-00, Figures 6, 10, 11 and 12.

A. Incorrect since the RHRSW side of the HX is not highly radioactive.

B. Incorrect since firemain is not highly radioactive and whatever is getting wet should not go airborne until it is isolated and dries.

C. Incorrect since the feedwater reg valve is in the turbine building.

D. Correct answer since this steam leak is directly off of main steam and has the potential of being highly radioactive.

Unit 1 Rx Bldg Exhaust Ventilation

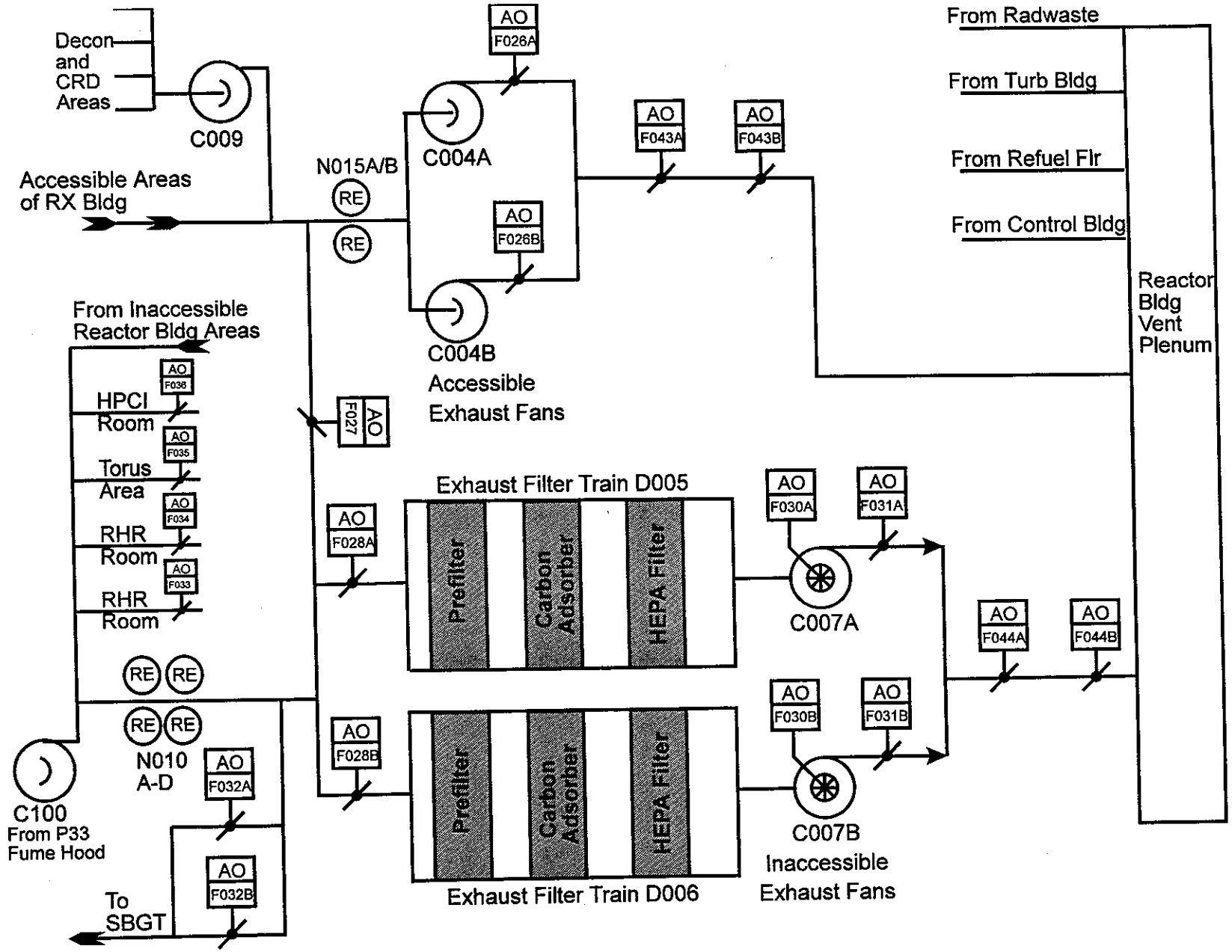

SI-01303 Fig 10

QUESTIONS REPORT
for Revision5HT2002

1. 295035G2.1.7 001

A tornado was observed moving toward the plant 15 minutes ago. Meteorological instruments have detected wind speeds in excess of 100 mph. The annunciator for "RB INSIDE TO OUTSIDE AIR DIFF PRESS LOW" has just alarmed and the Inside Rounds SO reports air rushing in and then out through a crack in the Reactor Bldg wall on the 158' EL. The following conditions exist for Secondary Containment:

Reactor Power	Both Units at 100% RTP
Rx Bldg Dp	fluctuating between 0" and +.25" Hg
Rx Bldg Vent System	system isolated
Rx Bldg Vent Rad level	1 mR/hr
Area water levels	normal

Which ONE of the following describes the appropriate actions the Shift Supervisor should take?
(Provide copy of 73EP-EIP-001-OS)

A. Declare an ALERT. Initiate actions for Secondary Containment System being Inoperable.

B. Declare a SITE AREA EMERGENCY. Initiate actions for Secondary Containment System being Inoperable.

C. Declare an ALERT. No actions required for Secondary Containment System.

D. Declare a SITE AREA EMERGENCY. No actions required for Secondary Containment System.

References: 73EP-EIP-001-0S Rev. 14.2 pg 16 & 22 of 47
SC - Secondary Containment Control

A. Incorrect since should declare a Site Area Emergency due to tornado damage.

B. Correct answer.

C. Incorrect since should declare a Site Area Emergency due to tornado damage.

D. Incorrect since actions are required by Tech Specs since the Containment is Inoperable.

RO Tier:		SRO Tier:	T1G2
Keyword:	SECONDARY CONTAIN	Cog Level:	C/A 3.7/4.4
Source:	N	Exam:	HT02301
Test:	S	Misc:	TCK

37. 295035G2.1.7 001

A tornado was observed moving toward the plant 15 minutes ago. Meteorological instruments have detected wind speeds in excess of 100 mph. The annunciator for "RB INSIDE TO OUTSIDE AIR DIFF PRESS LOW" has just alarmed and the Inside Rounds SO reports air rushing in and then out through a crack in the Reactor Bldg wall on the 158' EL. The following conditions exist for Secondary Containment:

Reactor Power	Both Units at 100% RTP
Rx Bldg Dp	fluctuating between 0" and +.25" Hg
Rx Bldg Vent System	system isolated
Rx Bldg Vent Rad level	1 mR/hr
Area water levels	normal

Which ONE of the following describes the appropriate actions the Shift Supervisor should take?
(Provide copy of 73EP-EIP-001-OS)

A. Declare an ALERT due to loss of containment. Restart Reactor Bldg Vent System, commence a shutdown on both units and be in Mode 3 within 12 hours.

B. Declare a SITE EMERGENCY due to damage caused by the tornado. Restart Reactor Bldg Vent System, restore containment to OPERABLE status within 4 hours or place both units in Mode 3 within 12 hours.

C. Verify or Start the SBGT System, reduce reactor power on both units to < 15% RTP within 24 hours, declare an UNUSUAL EVENT if power reduction not completed on time.

D. Declare an ALERT due to damage caused by the tornado. Restart Reactor Bldg Vent System and SBGT System, maintain reactor power at Shift Supervisors discretion.

References: 73EP-EIP-001-0S Rev. 14.2 pg 16 & 22 of 47
SC - Secondary Containment Control

get rid of Tech spec time limit. containment operable

A. Incorrect since declare a Site Emergency due to tornado damage.

B. Correct answer.

C. Incorrect since there is no direction to start SBGT and no direction to lower power to <15%. The 15% is the power level where primary containment is not required.

D. Incorrect since no direction to start SBGT and reactor power should be lower due to

QUESTIONS REPORT
for Revision2 HT2002

RO Tier:		SRO Tier:	T1G2
Keyword:	SECONDARY CONTAIN	Cog Level:	C/A 3.7/4.4
Source:	N	Exam:	HT02301
Test:	S	Misc:	TCK

95. 295035G2.1.7 001

A tornado was observed moving toward the plant 15 minutes ago. Meteorological instruments have detected wind speeds in excess of 100 mph. The annunciator for "RB INSIDE TO OUTSIDE AIR DIFF PRESS LOW" has just alarmed and the outside operator reports that it looks like part of the Reactor Bldg siding is loose. The following conditions exist for Secondary Containment:

Reactor Power	Both Units at 100% RTP
Rx Bldg Dp	fluctuating between 0" and +.25" Hg
Rx Bldg Vent System	system isolated
Rx Bldg Vent Rad level	1 mR/hr
Area water levels	normal

Which ONE of the following describes the appropriate actions the Shift Supervisor should take?

A. Restart Reactor Bldg Vent System, commence a shutdown on both units and be in Mode 3 within 12 hours, declare ALERT due to loss of containment.

B. Restart Reactor Bldg Vent System, restore containment to OPERABLE status within 1 hour or place both units in Mode 3 within 12 hours, declare a SITE EMERGENCY due to damage caused by the tornado.

C. Verify or Start the SBGT System, reduce reactor power on both units to < 15% RTP within 24 hours, declare an UNUSUAL EVENT if power reduction not completed on time.

D. Restart Reactor Bldg Vent System and SBGT System, maintain reactor power at Shift Supervisors discretion, declare ALERT due to damage caused by tornado.

References: 73EP-EIP-001-0S Rev. 14.2 pg 16 & 22 of 47
SC - Secondary Containment Control

A. Incorrect since declare a Site Emergency due to tornado damage.

B. Correct answer.

C. Incorrect since there is no direction to start SBGT and no direction to lower power to <15%. The 15% is the power level where primary containment is not required.

D. Incorrect since no direction to start SBGT and reactor power should be lower due to loss of containment and Site Emergency should be declared.

QUESTIONS REPORT
for HT2002

RO Tier:		SRO Tier:	T1G2
Keyword:	SECONDARY CONTAIN	Cog Level:	C/A 3.7/4.4
Source:	N	Exam:	HT02301
Test:	S	Misc:	TCK

QUESTIONS REPORT
for HT2002

1. 295035G2.1.7 001

A tornado was observed moving toward the plant 15 minutes ago. The annunciator for "RB INSIDE TO OUTSIDE AIR DIFF PRESS LOW" has just alarmed and the outside operator reports that it looks like part of the Reactor Bldg siding is loose. The following conditions exist for Secondary Containment:

Reactor Power	Both Units at 100% RTP
Rx Bldg Dp	fluctuating between -.1" and +.25" Hg
Rx Bldg Vent System	system isolated
Rx Bldg Vent Rad level	1 mR/hr
Area water levels	normal

The Shift Supervisor actions should be:

A. Restart Reactor Bldg Vent System, commence a shutdown on both units and be in Mode 3 within 12 hours, declare ALERT due to loss of containment.

B. Restart Reactor Bldg Vent System, restore containment to OPERABLE status within 1 hour or place both units in Mode 3 within 12 hours, declare a SITE EMERGENCY due to damage caused by the tornado.

C. Verify or Start the SBGT System, reduce reactor power on both units to < 15% RTP within 24 hours, declare an UNUSUAL EVENT if power reduction not completed on time.

D. Restart Reactor Bldg Vent System and SBGT System, maintain reactor power at Shift Supervisors discretion, declare ALERT due to damage caused by tornado.

References: 73EP-EIP-001-0S Rev. 14.2 pg 16 & 22 of 47
SC - Secondary Containment Control

A. Incorrect since declare a Site Emergency due to tornado damage.

B. Correct answer.

C. Incorrect since there is no direction to start SBGT and no direction to lower power to <15%. The 15% is the power level where primary containment is not required.

D. Incorrect since no direction to start SBGT and reactor power should be lower due to loss of containment and Site Emergency should be declared.

10.0 - NATURAL PHENOMENON, (continued)

CAUTION

The value of any emergency actions, which may require movement of plant personnel, must be judged against the danger to personnel or nuclear safety.

Emergency conditions exist WHEN:	NUE	ALERT	SAE	GEN
HIGH WINDS EXIST:				
HIGH WINDS are indicated by: Any tornado observed onsite **OR** Any hurricane force winds projected onsite with windspeed > 75 mph	■			
Any tornado observed striking the operating facility (areas within the protected area and the 230 Kv and 500 Kv switchyards) **OR** Any hurricane observed onsite with sustained windspeeds at design level (≥ 94.5 mph) **OR** SOS/ED judgment		■		
The observation of damage from an onsite tornado with windspeed in excess of meteorological instruments range (>100 mph) **OR** Sustained windspeeds in excess of meteorological instruments range (>100 mph) **AND** Either unit NOT in Cold Shutdown			■	

END - HIGH WINDS

→ [NATURAL PHENOMENON - CONTINUED TO NEXT PAGE] →

7.0 - LOSS OF CONTAINMENT

Emergency conditions exist WHEN:	NUE	ALERT	SAE	GEN
NOTE NUE is to be declared upon commencing Load Reduction. **A LOSS OF PRIMARY OR SECONDARY CONTAINMENT INTEGRITY OCCURS** as indicated by the inability to meet any one of the requirements WITHIN the time limit established by the applicable unit's TS.	■			
See Section 11.0, Hazards to Plant Operation, for determination of Alert Classification.		■		
See Section 11.0, Hazards to Plant Operation for determination of Site Area Emergency Classification.			■	
See Section 22.0, Multiple Symptoms and Other Conditions, for determination of General Emergency Classification.				■

END
LOSS OF CONTAINMENT

SC - SECONDARY CONTAINMENT CONTROL

l temperature above
perating Temperature

Area or floor drain sump water level above
Table 5 Maximum Normal Operating Water Level

Area or HVAC exhaust radiation level above
Table 6 Maximum Normal Operating Radiation Level

Differential pressure at or above
0 in. of water

WHILE PERFORMING THE FOLLOWING

IF	THEN
PRIMARY CONTAINMENT FLOODING IS OR HAS BEEN REQUIRED	exit the EOPs and enter the Severe Accident Guidelines

Go to SAGs

WHILE PERFORMING THE FOLLOWING

IF	THEN
ANY Unit 1 or Unit 2 secondary containment HVAC exhaust radiation level exceeds the isolation setpoint (Table 14)	confirm o Unit 1 and Unit 2 Reactor Building HVAC isolation o Unit 1 and Unit 2 Refuel Floor HVAC isolation o Unit 1 and Unit 2 SBGT initiation per 34AB-T22-003-1S
Refuel Floor HVAC isolates AND a Unit 1 or Unit 2 secondary containment radiation condition does NOT exist	restart Refuel Floor HVAC per 34SO-T41-006-1S If necessary defeat high drywell pressure AND low RWL isolation interlocks per 31EO-EOP-100-1S
Reactor Building HVAC isolates AND a Unit 1 or Unit 2 secondary containment radiation condition does NOT exist	restart Reactor Building HVAC per 34SO-T41-005-1S If necessary defeat high drywell pressure AND low RWL isolation interlocks per 31EO-EOP-100-1S

PERFORM CONCURRENTLY

SC/T

available area coolers
ed areas.

secondary containment radiation
ndition does NOT exist

erate the following:
Refuel Floor HVAC
per 34SO-T41-006-1S
Reactor Building HVAC
per 34SO-T41-005-1S

WAIT UNTIL
ambient or differential temperature
is above
n Normal Operating Temperature
(Table 4)

ALL s arging into area
T sys l to:
re a cooling
down
press fire
tain primary containment
rity

RFORM CONCURRENTLY

WAIT UNTIL
area ambient or differential temperature
is above
Maximum Safe Operating Temperature
in more than one area
(Table 4)

Shut down reactor per 34GO-OPS-013-1S
or 34GO-OPS-014-1S

mperature

rature
ralure

IRED

SC/L

WAIT UNTIL
ONE of the following
is above
Maximum Normal Operating Water Level
(Table 5):
- o A floor drain sump water level
- o An area water level

Operate available sump pumps to restore and maintain water level below Maximum Normal Operating Water Level (Table 5)

IF ONE of the following CANNOT be restored and maintained below Maximum Normal Operating Water Level (Table 5):
- o ANY floor drain sump water level
- o ANY area water level

THEN Isolate ALL systems discharging water into sump or area EXCEPT systems required to:
- o assure adequate core cooling
- o shut down reactor
- o suppress fire
- o maintain primary containment integrity

PERFORM CONCURRENTLY

WAIT UNTIL
primary system
is discharging reactor coolant
into secondary containment
(Table 7)

WAIT UNTIL
area water level
is above
Maximum Safe Operating Water Level
in more than one area
(Table 5)

Shut down reactor per 34GO-OPS-013-1S
or 34GO-OPS-014-1S

BEFORE
ANY area water level reaches
Maximum Safe Operating Water Level
(Table 5)

PERFORM CONCURRENTLY
RC(A) point A

WAIT UNTIL
area water level
is above
Maximum Safe Operating Water Level
in more than one area
(Table 5)

EMERGENCY DEPRESS IS REQUIRED

SC/R

WAIT UNTIL
area radiation level
is above
Maximum Normal Operating Radiation
(Table 6)

Isolate ALL systems discharging into
EXCEPT systems required to:
- o assure adequate core cooling
- o shut down reactor
- o suppress fire
- o maintain primary containment integrity

PERFORM CONCURRENTLY

WAIT UNTIL
primary system
is discharging reactor coolant
into secondary containment
(Table 7)

Maximum Sa
in n

Shut down r
or 34GO-OP

BEFORE
ANY area radiation level reaches
Maximum Safe Operating Radiation Level
(Table 6)

PERFORM CONCURRENTLY
RC(A) point A

WAIT UNTIL
area radiation level
is above
Maximum Safe Operating Radiation Level
in more than one area
(Table 6)

EMERGENCY DEPRESS IS REQUIRED

RR - RADIOACTIVITY RELEAS

Offsite radioactivity release rate
above 0.57 mR/hr

WHILE PERFORMING THE FOLLOWING

IF	THEN
PRIMARY CONTAINMENT FLOODING IS OR HAS BEEN REQUIRED	exit the EOPs a Severe Accider

WHILE PERFORMING THE FOLLOWING

IF	THEN
Turbine Building HVAC is shutdown	restart Turbine required per 34

Isolate ALL primary systems discharging reactor coolant into areas outside primary and secondary containments (Table 7) EXCEPT systems required to:
- o assure adequate core cooling
- o shut down reactor
- o maintain primary containment integrity

IENT
URES

7)	Max Normal Operating	Max Safe Operating

107. G2.1.22 001

Unit 2 has been shutdown for a refueling outage. After 16 hours the following conditions exist:

Reactor Mode Switch:	Refuel
Reactor Temperature:	165°F and steady
Reactor Pressure:	0 psig

All reactor vessel head closure bolts are fully tensioned.
All rods are IN.

Which ONE of the following is correct Mode of Operation for Unit 2?

A.✓ Mode 2

B. Mode 3

C. Mode 4

D. Mode 5

References: Tech Spec section 1.1, Table 1.1-1
Modified from question #84 on 1995 SRO exam

A. Correct answer.

B,C,D Incorrect (See table 1.1-1) Unless a Special Operations Tech Spec is invoked then the reactor changes modes when moving the mode switch to refuel.

RO Tier:		SRO Tier:	T3
Keyword:	MODE	Cog Level:	C/A 2.8/3.3
Source:	M	Exam:	HT02301
Test:	S	Misc:	TCK

Table 1.1-1 (page 1 of 1)
MODES

MODE	TITLE	REACTOR MODE SWITCH POSITION	AVERAGE REACTOR COOLANT TEMPERATURE (°F)
1	Power Operation	Run	NA
2	Startup	Refuel[a] or Startup/Hot Standby	NA
3	Hot Shutdown[a]	Shutdown	> 212
4	Cold Shutdown[a]	Shutdown	≤ 212
5	Refueling[b]	Shutdown or Refuel	NA

(a) All reactor vessel head closure bolts fully tensioned.

(b) One or more reactor vessel head closure bolts less than fully tensioned.

84. Preparations are presently being made to startup the Unit One reactor. The following conditions exist:

Reactor Mode Switch: Shutdown
Reactor Pressure: 125 psig
All reactor vessel head closure bolts are fully tensioned
All rods are IN.

The reactor is in:

a. Mode 2
b. Mode 3
c. Mode 4
d. Mode 5

ANS: *b*
a,c,d incorrect, see table 1.1-1 (pg 1.1-8) in Unit 1 Tech Specs.
NEW

KA# Generic 2.1.22	***OBJ#*** 400.067.a.05	***REF*** LR-LP-30005	***COGNITIVE LVL*** 3

5. During a valve lineup, an operator needs to check a valve open. It is noted that the valve has a locking device on it. To check the valve position the operator should:

a. unlock the valve, turn it in the closed direction no more than 1/4 turn, place it full open, and replace the locking device
b. unlock the valve, turn it in the open direction, verify that the hand wheel moves less than 1/4 turn, and replace the locking device
c. leave the locking device installed, try to move the hand wheel to ensure locking device integrity, and verify stem position
d. leave the locking device installed, verify stem position, and verify administratively that the valve has not been repositioned.

ANS: *a*
b incorrect, check it in the closed direction
c,d incorrect, the locking device needs to be remove to check actual valve position.
NEW

KA# Generic 2.1.29	***OBJ#*** 300.022.a.06	***REF*** LT-LP-30004	***COGNITIVE LVL*** 1

110. G2.1.4 001

Fuel movement is on progress on Unit 2 with the following plant conditions:

	Mode Switch Position	Coolant Temperature	Reactor Power
Unit 1	Run	545°F	80%
Unit 2	Refuel	128°F	0%

Which ONE of the following is the minimum on-site shift staffing required by the Unit 2 Technical Specifications?
(Provide Tech Spec section 5.2.2)

A. SRO 1 + 1 for Fuel Handling
RO 2
PEO 2
STA 1

B. ✓ SRO 1 + 1 for Fuel Handling
RO 2
PEO 3
STA 1

C. SRO 2 + 1 for Fuel Handling
RO 2
PEO 3
STA 0

D. SRO 2 + 1 for Fuel Handling
RO 3
PEO 3
STA 0

References: Tech Spec Section 5.2.2
99 exam Question #6
LT-ST-30003-05, p.7 & 8
10CFR50.54(m)(2)(i)
Modified answer A as follows: PEO from 3 to 2.

A. Incorrect since 3 PEO's are required at all times.

B. Correct answer.

C. Incorrect since Unit 2 does not need an SRO since it is in Mode 5.

D. Incorrect since only 2 RO's are required (one for each unit that has fuel).

RO Tier:		SRO Tier:	T3
Keyword:	STAFFING	Cog Level:	MEM 2.3/3.4
Source:	B	Exam:	HT02301
Test:	S	Misc:	TCK

18. G2.1.4 001

Fuel movement is on progress on Unit 2 with the following plant conditions:

	Mode Switch Position	Coolant Temperature	Reactor Power
Unit 1	Run	545 F	80%
Unit 2	Refuel	128 F	0%

Which one of the following is the minimum on-site shift staffing required by the Unit 2 Technical Specifications?

A. SRO 1 + 1 for Fuel Handling
RO 2
PEO 2
STA 1

B. SRO 1 + 1 for Fuel Handling
RO 2
PEO 3
STA 1

C. SRO 2 + 1 for Fuel Handling
RO 2
PEO 3
STA 1

D. SRO 2 + 1 for Fuel Handling
RO 3
PEO 3
STA 1

References: Tech Spec Section 5.2.2

A. Incorrect since 3 PEO's are required at all times.

B. Correct answer.

C. Incorrect since Unit 2 does not need an SRO since it is in Mode 5.

D. Incorrect since only 2 RO's are required (one for each unit that has fuel).

QUESTIONS REPORT
for HT2002

SRO Only
99 exam Question #6
LT-ST-30003-05, p.8
10CFR50.54(m)(2)(i)
Modified answer A as follows: STA from 0 to 1, PEO from 3 to 2.

5.0 ADMINISTRATIVE CONTROLS

5.2 Organization

5.2.1 Onsite and Offsite Organizations

Onsite and offsite organizations shall be established for unit operation and corporate management, respectively. The onsite and offsite organizations shall include the positions for activities affecting safety of the nuclear power plant.

a. Lines of authority, responsibility, and communication shall be defined and established throughout highest management levels, intermediate levels, and all operating organization positions. These relationships shall be documented and updated, as appropriate, in organization charts, functional descriptions of departmental responsibilities and relationships, and job descriptions for key personnel positions, or in equivalent forms of documentation. These requirements, including plant specific titles of those personnel fulfilling the responsibilities of the positions delineated in these Technical Specifications, shall be documented in the Plant Hatch Unit 2 FSAR;

b. An assistant plant manager shall be responsible for overall safe operation of the plant and shall have control over those onsite activities necessary for safe operation and maintenance of the plant;

c. The corporate executive responsible for Plant Hatch shall take any measures needed to ensure acceptable performance of the staff in operating, maintaining, and providing technical support to the plant to ensure nuclear safety; and

d. The individuals who train the operating staff, carry out health physics, or perform quality assurance functions may report to the appropriate onsite manager; however, these individuals shall have sufficient organizational freedom to ensure their independence from operating pressures.

5.2.2 Unit Staff

The unit staff organization shall include the following:

a. A total of three plant equipment operators (PEOs) for the two units is required in all conditions. At least one of the required PEOs shall be assigned to each reactor containing fuel.

(continued)

5.2 Organization

5.2.2 Unit Staff (continued)

b. At least one licensed Reactor Operator (RO) shall be present in the control room for each unit that contains fuel in the reactor. In addition, while the unit is in MODE 1, 2, or 3, at least one licensed Senior Reactor Operator (SRO) shall be present in the control room.

c. The minimum shift crew composition shall be in accordance with 10 CFR 50.54(m)(2)(i). Shift crew composition may be less than the minimum requirement of 10 CFR 50.54(m)(2)(i) and 5.2.2.a for a period of time not to exceed 2 hours in order to accommodate unexpected absence of on duty shift crew members provided immediate action is taken to restore the shift crew composition to within the minimum requirements.

d. An individual qualified to implement radiation protection procedures shall be on site when fuel is in the reactor. The position may be vacant for not more than 2 hours, in order to provide for unexpected absence, provided immediate action is taken to fill the required position.

e. Administrative procedures shall be developed and implemented to limit the working hours of unit staff who perform safety related functions (e.g., licensed and non-licensed operations personnel, health physics technicians, key maintenance personnel, etc.).

Adequate shift coverage shall be maintained without routine heavy use of overtime. The objective shall be to have operating personnel work a nominal 40 hour week while the unit is operating. However, in the event that unforeseen problems require substantial amounts of overtime to be used, or during extended periods of shutdown for refueling, major maintenance, or major plant modification, on a temporary basis the following guidelines shall be followed:

1. An individual should not be permitted to work more than 16 hours straight, excluding shift turnover time;

2. An individual should not be permitted to work more than 16 hours in any 24 hour period, nor more than 24 hours in any 48 hour period, nor more than 72 hours in any 7 day period, all excluding shift turnover time;

3. A break of at least 8 hours should be allowed between work periods, including shift turnover time;

4. Except during extended shutdown periods, the use of overtime should be considered on an individual basis and not for the entire staff on a shift.

(continued)

I. Tech Spec Administrative Controls

Cover Tech Spec section 5.1, Responsibility

A. Responsibility

1. The Plant Manager provides direct executive oversight over all aspects of Plant Hatch.

2. The assistant plant manager is responsible for overall unit operation.

3. The Plant Manager, or his designee, is responsible for the Radiological Environmental Monitoring Program.

LO 2

4. The Superintendent of Shift (SOS) is responsible for the control room command function. During his absence an active Senior Reactor Operator (SRO), **OR** Licensed Reactor Operator (RO) if both units are in Mode 4 or 5, shall be designated to assume the control room command function.

EO 1a,b

Tech Specs Section 5.2.2.c

B. Unit Staff

1. A total of three Plant Equipment Operators (PEOs) for the two units is required at all times. At least one of the required PEOs shall be assigned to the reactor containing fuel.

* IEN 91-024 (CO 9100131)

2. At least one Licensed RO shall be in the Main Control Room (MCR) for each reactor containing fuel. Also at least one SRO shall be present in the MCR while the unit is in MODE 1, 2, or 3.

3. Minimum shift crew composition

The MCR shall be manned as a minimum per 10CFR50.54(m)(2)(i). The chart below outlines the requirements. Shift crew composition may be less than the minimum requirements for short periods, not to exceed 2 hours, to accommodate unexpected absences provided immediate action is taken to restore shift crew composition.

	Position	Minimum # Required
Both Units in Cold Shutdown	SRO	1
	RO	2
	PEO	3
	STA	0
Either Unit NOT in Cold Shutdown	SRO	2
	RO	3
	PEO	3
	STA	1

4. Overtime

a. Section 5.2.2.e limits the working hours of Unit staff who perform safety-related functions (e.g., SROs, ROs, Plant Equipment Operators, HPs, and key maintenance personnel, etc.).

b. In the event that unforeseen problems require substantial amounts of overtime to be used or during periods of shutdown for refueling, major maintenance, or major plant modifications, the following guidelines shall be followed on a temporary basis:

1) An individual should not be permitted to work more than 16 hours straight, excluding shift turnover time.

2) An individual should not be permitted to work more than 16 hours in any 24 hour period, nor more than 24 hours in any 48 hour period, nor more than 72 hours in any 7 day period, all excluding shift turnover time.

Question:
If employee came to work on night shift at 7:00 p.m. Friday and worked night shifts for 4 days, then came in at 7:00 a.m. Wednesday and worked day shift for 3 days; would employee violate overtime limits?

38. G2.2.27 001

Unit 1 is in Mode 5 with a core shuffle in progress. The bridge operator has just inserted a fuel bundle into the core when he notices that the adjacent fuel bundle is mis-oriented.

Which ONE of the following actions are required to be performed by the fuel handling crew with regards to the fuel shuffle?

A.✓ The bridge operator stops fuel movements and informs SRO of condition. The SRO contacts Reactor Engineering to prepare a Fuel Movement Sheet change. The crew reviews the approved change sheet, corrects the orientation error and continues with fuel movements with SRO approval.

B. The SRO allows the crew to continue with fuel movements after correcting the orientation error and notifies Reactor Engineering for documentation on the Core Loading Verification sheet.

C. The SRO stops fuel movements and the crew determines the proper orientation of the adjacent fuel bundle. The SRO approves the actions to re-orient the fuel bundle and the bridge operator notifies the control room when move is complete.

D. The SRO allows fuel movements to continue and contacts Reactor Engineering to prepare a Fuel Movement Sheet change. At the next appropriate opportunity the crew will correct the orientation error per the Movement Sheet as long as it is done on their shift.

References: 42FH-ERP-014-0S Rev. 15.2, pg 10 of 28
34FH-OPS-001-0S Rev. 21.1, pg 6 and 7 of 42

A. Correct answer.

B. Incorrect since ALL fuel movements must be stopped when an error is found.

C. Incorrect since the SRO cannot approve a movement without proper authorization.

D. Incorrect since the Fuel Movement Change sheet must be approved prior to any further fuel movements.

RO Tier:		SRO Tier:	T3
Keyword:	FUEL MOVEMENTS	Cog Level:	C/A 2.6/3.5
Source:	N	Exam:	HT02301
Test:	S	Misc:	TCK

113. G2.2.27 001

Unit 1 is in Mode 5 with a core shuffle in progress. The bridge operator has just inserted a fuel bundle into the core when he notices that the adjacent fuel bundle is mis-oriented.

Which ONE of the following actions are required to be performed by the fuel handling crew with regards to the fuel shuffle?

A. The bridge operator stops fuel movements and informs SRO of condition. The SRO contacts Reactor Engineering to prepare a Fuel Movement Sheet change. The crew reviews the approved change sheet and continues with fuel movements with SRO approval.

B. The SRO allows the crew to continue with fuel movements and notifies Reactor Engineering for documentation on the Core Loading Verification sheet.

C. The SRO stops fuel movements and the crew determines the proper orientation of the adjacent fuel bundle. The SRO approves the actions to re-orient the fuel bundle and the bridge operator notifies the control room when move is complete.

D. The SRO allows fuel movements to continue and contacts Reactor Engineering to prepare a Fuel Movement Sheet change. At the next appropriate opportunity the crew will complete the new movement as long as it is done on their shift.

References: 42FH-ERP-014-0S Rev. 15.2, pg 10 of 28
34FH-OPS-001-0S Rev. 21.1, pg 6 and 7 of 42

A. Correct answer.

B. Incorrect since ALL fuel movements must be stopped when an error is found.

C. Incorrect since the SRO cannot approve a movement without proper authorization.

D. Incorrect since the Fuel Movement Change sheet must be approved prior to any further fuel movements.

RO Tier:		SRO Tier:	T3
Keyword:	FUEL MOVEMENTS	Cog Level:	C/A 2.6/3.5
Source:	N	Exam:	HT02301
Test:	S	Misc:	TCK

QUESTIONS REPORT
for HT2002

1. G2.2.27 001

Unit 1 is in Mode 5 with a core shuffle in progress. The bridge operator has just inserted a fuel bundle into the core when he notices that the adjacent fuel bundle is mis-oriented. SELECT the actions required to be performed by the fuel handling crew with regards to the fuel shuffle?

A. The bridge operator stops fuel movements and informs SRO of condition. SRO allows bridge operator to correct orientation after verifying that the orientation was not correct.

B. The SRO allows the crew to continue with fuel movements and notifies Reactor Engineering for documentation on the Core Loading Verification sheet.

C. The SRO stops fuel movements and contacts Reactor Engineering to prepare a Fuel Movement Sheet change. The crew reviews the approved change sheet and continues with fuel movements with SRO approval.

D. The SRO allows fuel movements to continue and contacts Reactor Engineering to prepare a Fuel Movement Sheet change. At the next appropriate opportunity the crew will complete the new movement as long as it is done on their shift.

References: 42FH-ERP-014-0S Rev. 15.2, pg 10 of 28
34FH-OPS-001-0S Rev. 21.1, pg 6 and 7 of 42

A. Incorrect since all moves must be controlled by a Fuel Movement Sheet.

B. Incorrect since ALL fuel movements must be stopped when an error is found.

C. Correct answer.

D. Incorrect since the Fuel Movement Change sheet must be approved prior to any further fuel movements.

7.1.4.1.9 Present the change request, original marked-up move sheet(s), AND any additional sheets to another Reactor Engineer/designated alternate, OR a Shift Supervisor/SRO for review.

> NOTE
>
> In the special case of fuel movements that only involve the Spent Fuel Pool or a Spent Fuel Pool location, a Reactor Engineer may serve as the approval authority for the Reactor Engineering Supervisor. The Reactor Engineering Supervisor or superior must approve changes to move sheets being used to load an MPC-68.

7.1.4.1.10 Present the reviewed change request, original marked-up move sheet(s), AND any additional sheets to the Reactor Engineering Supervisor, Manager of Engineering Support, OR the SOS for approval. Upon approval, the Reactor Engineering Supervisor, Manager of Engineering Support, OR the SOS will sign the change request and any additional sheets and initial the changes on the original move sheet(s).

7.1.4.1.11 Make a copy of the completed Change Request AND forward to the Reactor Engineering Supervisor for review and possible Computer Database Update.

7.1.4.1.12 Attach the completed change request to the original move sheet.

7.1.4.2 IF major changes to the move sheet are needed AND these changes are such that they cannot be adequately handled by the above rules for changes, THEN all fuel movements must stop UNTIL a new move sheet can be prepared incorporating the new moves. The Reactor Engineer/designated alternate and the SRO on the refueling floor/Shift Supervisor decide IF a new move sheet is required. IF a new move sheet is required, make a copy of the approved move sheet and forward to the Reactor Engineering Supervisor.

5.2.7 Irradiated fuel must NOT be ungrappled in any Fuel Preparation Machine (FPM) UNLESS the FPM is in the full down position.

5.2.8 Fuel must NOT be ungrappled in the core, fuel storage canister OR in the fuel storage racks UNLESS proper depth and seating are verified.

5.2.9 IF, during fuel movement, it is found that conditions have changed such that any of the requirements of this procedure are no longer satisfied, any member of the refueling bridge team has the authority to halt fuel movement. Prior to halting fuel movement, the bundle will be loaded in a safe Fuel Pool location or returned to its proper In-Core location, if possible, UNTIL all requirements are again satisfied.

5.2.10 The Fuel Grapple must be in the full up position prior to moving the bridge OR trolley, except WHEN:

- making small adjustments of the bridge OR trolley position to allow alignment for latching OR discharging a fuel bundle, blade guide,or weight.
- transporting a blade guide/fuel bundle from one core location to another core location provided the "BUNDLE CLEAR OF CORE" light is illuminated. WHILE moving the bridge/trolley, the travel must be slow enough such that the mast does not contact the trolley.
- performing refueling interlock checks.
- core load OR fuel pool verification as long as the bridge is not moved at a high rate of speed and no load other than the camera and bracket are attached.
- after discharging a load in the fuel pool/core, THEN raise the grapple several feet OR as high as necessary to clear any obstruction. WHILE moving the bridge/trolley to a new location for the purpose of grappling onto another load, the travel must be slow enough such that the mast does not contact the trolley.

5.2.11 The trolley (operator's cab) must be aligned to allow passage through the transfer canal prior to moving the bridge forward OR backward WHEN transferring fuel OR blade guides from the Spent Fuel Pool to the Reactor Cavity, OR vice versa, OR WHEN transferring fuel OR blade guides from one spent Fuel Pool to another.

5.2.12 The Refueling Bridge Operator will NOT engage in any other activities WHILE moving the Refueling Bridge OR manipulating any Refueling Bridge controls that will divert full attention from being devoted to the operation of the Refueling Bridge. Any movement of the Refueling Bridge OR Hoists must be terminated IF full attention cannot be devoted to the Refueling activity in progress.

5.2.12.1 The Refueling Bridge Operator will be fully cognizant of all procedural requirements for fuel movement and must immediately inform the SRO of any problems, whether with equipment or procedures, which could prevent compliance with these procedural requirements.

5.2.12.2 The Refueling Bridge Operator must remain aware of the critical nature of his task, utilize STAR techniques to preclude any errors, and maintain a questioning attitude.

5.2.12.3 The Refueling Bridge Operator is expected to ask the SRO to verify or clarify any movement which appears unusual.

5.2.13 A Senior Reactor Operator (SRO) shall be on the Refueling Bridge during all core alterations, and other fuel movements as directed by the Operations Manager. His responsibilities will be as follows:

5.2.13.1 The SRO will not allow any fuel movement unless the Refuel crew is able to devote 100% attention to the task. The crew, as a minimum, will consist of an SRO, a bridge operator, and a second verifier. The SRO must ensure that each member is fully qualified and capable of performing their task, and that each is aware of their responsibilities.

5.2.13.2 The SRO must ensure compliance with all applicable procedures at all times, and must ensure that procedural & equipment problems are properly documented. Procedure problems, or conditions which preclude compliance, must be corrected before proceeding.

5.2.13.3 The SRO will not allow any crew member to conduct a turnover or be relieved when the bridge or grapple is moving, or when the grapple is loaded.

5.2.13.4 The SRO must ensure that the control room is aware of conditions on the refueling floor. Constant communications will be maintained with a licensed individual in the control room when core alterations are in progress.

5.2.13.5 The SRO will ensure that the crew has all the material necessary (i.e., procedures, core maps, movement sheets, etc.) to conduct fuel movement promptly and correctly. One required item will be a core map with the cell removal sequence for upcoming cells already marked and verified (not required for fuel shuffle). Laptop computer displays of the core may be used instead of paper copies of core maps.

5.2.13.6 The SRO will ensure that the work pace is comfortable to all members, and that no one feels any urgency in completing the task.

115. G2.2.32 001

Unit 2 is in a refueling outage with a fuel shuffle in progress. A fuel bundle is being transfered from the core to the fuel pool when the Control Board Operator reports that reactor cavity water level is decreasing.

Per *34AB-G41-002-2S, Decreasing Rx Well/Fuel Pool Water Level*, which ONE of the following actions should the refueling SRO direct the bridge operator to perform?

A. Return the fuel bundle to the closest in-core location as possible.

B. Stop all movement and evacuate the refueling floor immediately.

C. Continue with movement to the fuel pool and lower it as deep into the pool as possible.

D. Return the fuel bundle to its proper in-core location.

References: 34AB-G41-002-2S Rev. 2 pg 2 of 5.
1999 Hatch Exam Question 21
Modified answers slightly to make different answer correct.

A. Incorrect since the direction should be to move the fuel bundle to its proper in-core location.

B. Incorrect since direction should be to lower the bundle and you only have to evacuate the refueling floor if there are radiation alarms.

C. Incorrect since direction should be to place the fuel bundle in any fuel pool rack.

D. Correct answer.

RO Tier:		SRO Tier:	T3
Keyword:	FUEL POOL	Cog Level:	MEM 2.3/3.3
Source:	B	Exam:	HT02301
Test:	S	Misc:	TCK

QUESTIONS REPORT
for HT2002

1. G2.2.32 001

Unit 2 is in a refueling outage with a fuel shuffle in progress. A fuel bundle is being transfered from the core to the fuel pool when the Control Board Operator reports that reactor cavity water level is decreasing. Per 34AB-G41-002-2S, *Decreasing Rx Well/Fuel Pool Water Level*, which one of the following actions should the refueling SRO direct the bridge operator to perform?

A. Return the fuel bundle to the closest in-core location as possible.

B. Stop all movement and evacuate the refueling floor immediately.

C. Continue with movement to the fuel pool and lower it as deep into the pool as possible.

D. Return the fuel bundle to its proper in-core location.

References: 34AB-G41-002-2S Rev. 2 pg 2 of 5.
1999 Hatch Exam Question 21
~~Modified answers slightly to make different answer correct.~~

A. Incorrect since the direction should be to move the fuel bundle to its proper in-core location.

B. Incorrect since direction should be to lower the bundle and you only have to evacuate the refueling floor if there are radiation alarms.

C. Incorrect since direction should be to place the fuel bundle in any fuel pool rack.

D. Correct answer.

4.0 SUBSEQUENT OPERATOR ACTIONS

CAUTION

CONTROL ROD BLADES AND FUEL IN THE FUEL PREP MACHINE MAY BECOME UNCOVERED ALONG WITH IRRADIATED MATERIALS THAT ARE IN THE PROCESS OF BEING MOVED. EXTREME RADIATION LEVELS COULD RESULT IF THESE ITEMS ARE EXPOSED ABOVE WATER.

4.1 Dispatch personnel to investigate the alarm.

4.2 IF a refueling floor radiation monitor alarms due to decreasing reactor well OR fuel pool water level:

4.2.1 Evacuate the refueling floor immediately.

4.2.2 Have Health Physics assess the Radiological conditions on the Refueling Floor AND establish a manned access control point to the Refueling Floor. IF fuel OR highly irradiated components are actually uncovered - exposure rates may be so severe that additional entries may NOT be possible.

4.3 IF fuel movement is in progress, place the fuel bundle in a safe condition by performing one of the following:

4.3.1 Return fuel bundle to its proper incore location, OR

4.3.2 Place fuel bundle in a fuel storage rack in the fuel pool, OR

4.3.3 Lower fuel bundle as deep into the vessel as possible.

4.4 IF movement of other highly radioactive materials (irradiated control rods, fuel channels, LPRM's, etc.) is in progress, PLACE the item in a safe condition by performing one of the following:

4.4.1 Lower item as deep into vessel as possible

4.4.2 Lower item as deep into fuel pool, cask storage area, OR transfer canal, as possible

4.5 Contact Health Physics to provide continuous coverage WHILE personnel are on the refueling floor.

#21
OK

21. Unit 2 is in a refueling outage with a full core off load in progress. A fuel bundle is being transfered from the core to the fuel pool when the control room operator reports that reactor cavity water level is decreasing. Per 34AB-G41-002-2S, "*Decreasing Rx Well/Fuel Pool Water Level,*" which one of the following actions should the refueling SRO direct the bridge operator to perform?

a. Return the fuel bundle to any in-core location that is available.
✓b. Move the fuel bundle to any fuel storage rack in the fuel pool.
c. Move the fuel bundle to the fuel pool and lower it as deep into the pool as possible.
d. Do not move the fuel bundle any further and lower it as deep as possible where it is.

Bank question (modified slightly)
34AB-G41-002-2S
LT-LP-04502-03, p. 36

KEY WORDS:

System	K/A No.	K/A Value	Difficulty	SamplePlan	Vendor	Licensee	Last used
GENERICS	2.2.32	(2.3/3.3)	1	TIER3CAT2	BWR-4	HATCH	BANK

DATES: Modified: Friday, September 24, 1999 Used:

116. G2.2.6 001

While reviewing a procedure that is required to be completed before the end of the current shift, the SS notices a step that requires the use of a gauge which is broken. Another gauge is available in the system and the SS has confirmed it will operationally function as a substitute.

At a minimum, which ONE of the following actions must be done to perform the procedure? The SS should:

A. Make a pen and ink change to the procedure.

B. Make a SRO change to the procedure.

C. Make a pen and ink change to the procedure with SOS concurrence.

D. Make a permanent change to the procedure obtaining manager approval prior to use.

Reference: LT-LP-30004-04, Pg. 15-17
99 exam question #19
EO 300.002.a.02

A. Incorrect since this process is used for editorial changes. This change is not editorial.

B. Correct answer.

C. Incorrect since this process is used for editorial changes. This change is not editorial.

D. Incorrect since this is the normal process that is used if the procedure is not needed now. Since this procedure change is needed prior to the end of the shift then an SRO change is appropriate.

RO Tier:		SRO Tier:	T3
Keyword:	PROCEDURE CHANGE	Cog Level:	MEM 2.3/3.3
Source:	B	Exam:	HT02301
Test:	S	Misc:	TCK

22. G2.2.6 001

While reviewing a procedure that is required to be completed before the end of the current shift, the SS notices a step requireing the use of a gauge which is broken. Another gauge is available in the system and the SS has confirmed it will operationally function as a substitute. At a minimum, which one of the following actions must be done to perform the procedure? The SS should:

A. Make a pen and ink change to the procedure.

B. Make a SRO change to the procedure.

C. Make a pen and ink change to the procedure with SOS concurrence.

D. Make a permanent change to the procedure obtaining manager approval prior to use.

Reference: LT-LP-30004-04, Pg. 15-17
99 exam question #19

A. Incorrect since this process is used for editorial changes. This change is not editorial.

B. Correct answer.

C. Incorrect since this process is used for editorial changes. This change is not editorial.

D. Incorrect since this is the normal process that is used if the procedure is not needed now. Since this procedure change is needed prior to the end of the shift then an SRO change is appropriate.

5. Controlling equipment status, with special emphasis on Technical Specifications Limiting Conditions for Operation and for worker protection.

6. Controlling the position/condition of all plant components and systems except as allowed by other approved procedures.

7. Ensuring operations personnel are trained and qualified.

8. Ensuring that operations activities are governed by effective administration controls.

9. Being responsible for the operation of the Radwaste facility.

EO 4

B. The order to startup or to shutdown the reactor for planned maintenance or refueling is issued by the General Manager - Nuclear Plant or his designated alternate.

EO 5

C. In an emergency or when it is judged that continued operation would jeopardize plant or personnel safety, any member of the plant staff holding an operator license has the authority to order the reactor shutdown or to shut it down himself.

Review 10AC-MGR-003-0S

IV. 10AC-MGR-003-0S, "Preparation and Control of Procedures"

Procedure is now a flowchart. Review Attachment 3 of LP-30004.
Review 10AC-MGR-003-0S,

A. This procedure shows how to process:

1. Changes to existing procedures,

2. New procedures,

3. Special purpose procedures and,

4. Vendor procedures controlled under the Plant Hatch Quality Assurance Program

(10AC-MGR-003, Attachment 1)

B. Editorial Changes must fit one of the examples listed in Attachment 1. The Editorial Change process is restricted to those examples and no other changes can be made using this process.

EO 6

C. SRO Changes may be made provided the change is not Editorial and the intent of the original procedure is not altered. Intent of a procedure is what the procedure does and how it does it.

1. General Examples of Changes of Intent:

   a. Change in the method of performing a step or the sequence of steps in such a way that it would affect the results.

   b. Achieving the same result with different steps or a different sequence of steps which have not been previously evaluated.

2. Specific Examples of Changes of Intent:

   a. Change in sequence of performing Core Alterations.

   b. Changes to Limits/Setpoints/Acceptance Criteria NOT previously evaluated (by 10 CFR 50.59 Evaluation).

   c. Changes that reduce control or design features for ALARA.

   d. Changes to initial conditions.

   e. Deleting or reducing verifications or requirements.

   f. Deleting or relocating Hold Points.

   g. Changes to authority or responsibility for review or approval.

Question: May a SRO change be made to a procedure that addresses core alteration?
Ans: No (10AC-MGR-003, Attachment 2)

h. Changes to SSC alignment not previously evaluated.

3. SRO Changes to procedures must be approved by two members of management:

EO 7

a. Any Supervisor familiar with the work and knowledgeable of the procedure change process.

b. Any licensed SRO whose license is active or inactive. This does not have to be an individual actually on shift. The role of the SRO here is to ensure that there is no adverse impact on plant operation.

4. SRO Changes must be reviewed by the PRB or Qualified Reviewer (QR) and approved by the applicable manager within 14 days of becoming effective.

V. 10AC-MGR-004-0S, "Deficiency Control System"

A. Correction of Deficiencies

The normal methods for affecting change to improve reliability or to correct defects that reduce reliability are the various administrative controls that have been established to identify and either correct or improve these conditions. The administrative processes for correcting defects or causing improvements are identified as follows:

1. A Maintenance Work Order (MWO) is used to control the correction of defects in plant equipment.

2. A Request for Engineering Review (RER) is used to initiate and control modifications to plant equipment.

3. A Procedure Processing Form, or an Instruction Request/ Development Form is used to control the development of or revision to Plant Hatch Procedures and Instructions.

300.041.C MAINTAIN key control per the guidelines outlined in 80AC-SEC-002-0S, "Key and Annunciator Door Control."

400.059.A Given a plant transient and/or accident has occurred, collect and analyze the required data to, DETERMINE the root cause per 10AC-MGR-012-0S "Plant Event Analysis and Resolution Program."

ENABLING OBJECTIVES

1. Given procedure 00AC-REG-001-0S, IDENTIFY the events that require a report to be made to the NRC within one hour. (SRO ONLY) (300.004.b.01)

2. Given procedure 00AC-REG-001-0S, IDENTIFY the reporting requirements to the NRC on the actuation and injection of an Emergency Core Cooling System. (SRO ONLY) (300.004.b.03)

3. Given procedure 00AC-REG-001-0S, IDENTIFY those events that require a report to be made to the NRC within four hours. (SRO ONLY) (300.004.b.02)

4. LIST the personnel having the authority to order a startup or shutdown of the Reactor for planned maintenance or refueling per 10AC-MGR-001-0S. (300.032.a.02)

5. STATE who has the authority to shutdown the Reactor in an emergency condition per 10AC-MGR-001-0S. (300.032.a.03)

6. Given the applicable procedure, IDENTIFY the conditions in which a SRO change to a procedure is allowed to be made. (SRO ONLY) (300.002.a.02)

7. Given the applicable administrative procedure, IDENTIFY the approval requirements for an SRO change to a procedure. (SRO ONLY) (300.002.a.03)

8. Given a scenario, STATE whether the conditions given require the initiation of a Deficiency Card. (300.023.a.01)

9. Given a list of statements, SELECT the statement which best describes the purpose of analyzing unusual plant events per 10AC-MGR-012-0S, "Plant Event Analysis and Resolution Program." (400.059.a.01)

10. Given a list of evolutions, SELECT the evolution that satisfies the procedure requirements for independent verification. (300.016.a.02)

11. Given plant\system status and a copy of 30AC-OPS-001-0S, DETERMINE if an equipment clearance is being processed correctly. (300.016.a.01)

39. G2.3.3 001

Unit 1 is at 75% RTP. At 1400 on 8/12/02, after performing scram time testing, the Control Board Operator notes that the Offgas Flow has increased from the steady state level as follows:

Offgas Inlet Flow to Stack prior to scram time testing	100 scfm
Offgas Inlet Flow to Stack after scram time testing	175 scfm

Which ONE of the following actions is/are required by Tech Specs for this condition? (Provide copy of TS Section 3.7.6 along with SR's)

A. Notify Chemistry to sample the offgas system by 1900 to verify gross gamma activity is ≤ 240 mCi/second. If greater than 240 mCi/second then isolate SJAE within 12 hours OR BE in Mode 3 within 12 hours.

B. Notify Chemistry to sample the offgas system by 1800 to verify gross gamma activity is ≤ 240 mCi/second. If greater than 240 mCi/second then enter 72 hour LCO to restore within limits.

C. Notify Chemistry to sample the offgas system by 0200 on 8/13/02 to verify gross gamma activity is ≤ 240 mCi/second. If greater than 240 mCi/second then enter 72 hour LCO to restore within limits.

D. Notify Chemistry to sample the offgas system by 0400 on 8/13/02 to verify gross gamma activity is ≤ 240 mCi/second. If greater than 240 mCi/second then enter 24 hour LCO to restore within limits.

References: Tech Spec section 3.7.6 (SR 3.7.6.1)
LT-LP-03101 Rev. 3 pg 29 of 44

A. Incorrect since the sample time does not allow for 25% grace period and if exceed the LCO limit then have 72 hours to restore.

B. Correct answer.

C. Incorrect since the sample time is based on 8 hours instead of the required 4 hours.

D. Incorrect since the sample time is based on 8 hours plus 25% instead of the required 4 hours. Also, if exceed the LCO limit then have 72 hours to restore.

RO Tier:		SRO Tier:	T3
Keyword:	OFF-GAS	Cog Level:	C/A 1.8/2.9
Source:	N	Exam:	HT02301
Test:	S	Misc:	TCK

119. G2.3.3 001

Unit 1 is at 75% RTP. At 1400 on 8/12/02, after performing scram time testing, the Control Board Operator notes that the Offgas Flow has increased from the steady state level as follows:

Offgas Inlet Flow to Stack prior to scram time testing	100 scfm
Offgas Inlet Flow to Stack after scram time testing	175 scfm

Which ONE of the following actions is/are required by Tech Specs for this condition?

A. Notify Chemistry to sample the offgas system by 1800 at the latest to verify gross gamma activity is ≤ 240 mCi/second. If greater than 240 mCi/second then enter 24 hour LCO to restore within limits.

B. Notify Chemistry to sample the offgas system by 1900 at the latest to verify gross gamma activity is ≤ 240 mCi/second. If greater than 240 mCi/second then enter 72 hour LCO to restore within limits.

C. Notify Chemistry to sample the offgas system by 0200 on 8/13/02 at the latest to verify gross gamma activity is ≤ 240 mCi/second. If greater than 240 mCi/second then enter 72 hour LCO to restore within limits.

D. Notify Chemistry to sample the offgas system by 0400 on 8/13/02 at the latest to verify gross gamma activity is ≤ 240 mCi/second. If greater than 240 mCi/second then enter 24 hour LCO to restore within limits.

References: Tech Spec section 3.7.6 (SR 3.7.6.1)
LT-LP-03101 Rev. 3 pg 29 of 44

A. Incorrect since the sample time does not allow for 25% grace period and if exceed the LCO limit then have 72 hours to restore.

B. Correct answer.

C. Incorrect since the sample time is based on 8 hours instead of the required 4 hours.

D. Incorrect since the sample time is based on 8 hours plus 25% instead of the required 4 hours. Also, if exceed the LCO limit then have 72 hours to restore.

RO Tier:		SRO Tier:	T3
Keyword:	OFF-GAS	Cog Level:	C/A 1.8/2.9
Source:	N	Exam:	HT02301
Test:	S	Misc:	TCK

QUESTIONS REPORT
for HT2002

1. G2.3.3 001

Unit 1 is at 75% RTP. At 1400 on 8/12/02, after performing scram time testing, the Control Board Operator notes that the Offgas Flow has increased from the steady state level as follows:

Offgas Inlet Flow to Stack prior to scram time testing	100 scfm
Offgas Inlet Flow to Stack after scram time testing	175 scfm

SELECT the action(s) that is/are required by Tech Specs for this condition.

A. Notify Chemistry to sample the offgas system by 1800 at the latest to verify gross gamma activity is ≤ 240 mCi/second. If greater than 240 mCi/second then enter 24 hour LCO to restore within limits.

B. Notify Chemistry to sample the offgas system by 1900 at the latest to verify gross gamma activity is ≤ 240 mCi/second. If greater than 240 mCi/second then enter 72 hour LCO to restore within limits.

C. Notify Chemistry to sample the offgas system by 0200 on 8/13/02 at the latest to verify gross gamma activity is ≤ 240 mCi/second. If greater than 240 mCi/second then enter 72 hour LCO to restore within limits.

D. Notify Chemistry to sample the offgas system by 0400 on 8/13/02 at the latest to verify gross gamma activity is ≤ 240 mCi/second. If greater than 240 mCi/second then enter 24 hour LCO to restore within limits.

References: Tech Spec section 3.7.6 (SR 3.7.6.1)
LT-LP-03101 Rev. 3 pg 29 of 44

A. Incorrect since the sample time does not allow for 25% grace period and if exceed the LCO limit then have 72 hours to restore.

B. Correct answer.

C. Incorrect since the sample time is based on 8 hours instead of the required 4 hours.

D. Incorrect since the sample time is based on 8 hours plus 25% instead of the required 4 hours. Also, if exceed the LCO limit then have 72 hours to restore.

SURVEILLANCE REQUIREMENTS

SURVEILLANCE		FREQUENCY
SR 3.7.6.1	----------NOTE---------- Not required to be performed until 31 days after any main steam line not isolated and SJAE in operation. ----------	
	Verify the gross gamma activity rate of the noble gases is ≤ 240 mCi/second.	31 days AND Once within 4 hours after a ≥ 50% increase in the nominal steady state fission gas release after factoring out increases due to changes in THERMAL POWER level

3.7 PLANT SYSTEMS

3.7.6 Main Condenser Offgas

LCO 3.7.6 The gross gamma activity rate of the noble gases measured at the main condenser evacuation system pretreatment monitor station shall be ≤ 240 mCi/second.

APPLICABILITY: MODE 1,
MODES 2 and 3 with any main steam line not isolated and steam jet air ejector (SJAE) in operation.

ACTIONS

CONDITION	REQUIRED ACTION	COMPLETION TIME
A. Gross gamma activity rate of the noble gases not within limit.	A.1 Restore gross gamma activity rate of the noble gases to within limit.	72 hours
B. Required Action and associated Completion Time not met.	B.1 Isolate all main steam lines.	12 hours
	OR	
	B.2 Isolate SJAE.	12 hours
	OR	
	B.3.1 Be in MODE 3.	12 hours
	AND	
	B.3.2 Be in MODE 4.	36 hours

LT-03101 Table 1

N62-P600 METER AND RECORDER INDICATIONS

METERS

R605	Glycol Pump Disch	0-50 psi
R600	O/G To Preheater	0-15 psi
R601A	Recomb Inlet A	0-600°F
R601B	Recomb Inlet B	0-600°F
R607A	B001A Temp (Preheater Inlet)	0-400°F
R607B	B001B Temp (Preheater Inlet)	0-400°F
R611	Prefilter Diff Press	0-12"H_2O
R612	Adsorber Train Inlet/Outlet Press	0-3.5 psid
R616	After Fltr Diff Press	0-12" H_2O

RECORDERS

R608	Inlet Temp (Reheater)		0-100°F
R609	Outlet Dewpoint		0-100°F
R606	Storage Tk Temp (Glycol)		0-100°F
R604	Inlet Flow To Stack	RED - High	3-256 SCFM
		BLK - Low	3-24 SCFM
R615	Adsorber Vault Temp		0-100°F
R603	H_2 Analyzers	RED - A	0-5%
		GRN - B(BLK on U1)	0-5%
R602	Recombiner Temperatures (Multipoint)		0-1000°F
R613	Adsorber Vessel Temperatures (Multipoint)		0-150°F

120. G2.3.4 001

The Emergency Director decides that is is necessary to send someone into the Reactor Building (with Health Physics) to isolate a leak before the Core Spray and RHR pumps are flooded. (No releases are underway and RPV level is being maintained at 60 inches with the Condensate System)

Which ONE of the following is the ***maximum*** allowable dose limit that the Emergency Director may authorize?

A. 5 REM

B. ✓ 10 REM

C. 25 REM

D. > 25 REM

References: 73EP-EIP-017-0S Rev 2.1 pg 6 of 13.
SRO exam 95-01 question # 94.

B. Correct answer.

A,C and D. Incorrect. See reference above on page 6.

RO Tier:		SRO Tier:	T3
Keyword:	DOSE RATE LIMITS	Cog Level:	MEM 2.5/3.1
Source:	B	Exam:	HT02301
Test:	S	Misc:	TCK

2. G2.3.4 001

The Emergency Director decides that is is necessary to send someone into the Reactor Building (with Health Physics) to isolate a leak before Core Spray and RHR pumps are flooded. (No releases are underway and RPV level is being maintained at 60 inches with the Condensate System)

SELECT the ***maximum*** allowable dose limit that the Emergency Director may authorize:

A. 5 REM

B. 10 REM

C. 25 REM

D. > 25 REM

References: 73EP-EIP-017-0S Rev 2.1 pg 6 of 13.
SRO exam 95-01 question # 94.

B. Correct answer.

A,C and D. Incorrect. See reference above on page 6.

7.4 EMERGENCY EXPOSURE GUIDELINES

7.4.1 The Emergency Director will establish the exposure limits for the emergency response personnel based on the following Emergency Response Personnel Exposure Guides:

NOTE

These guidelines do not establish a rigid upper limit of exposure. The Emergency Director may use his/her judgment in establishing the appropriate limit.

NOTE

No thyroid limit is specified for lifesaving action since the complete loss of the thyroid may be considered an acceptable risk for saving a life; however, thyroid exposure must be minimized through the use of respiratory protection and/or KI tablets.

EMERGENCY RESPONSE PERSONNEL EXPOSURE GUIDES

Dose Limit* (REM)	*Activity*	*Condition*
5	all	n/a
10	protecting valuable property	lower dose not practicable
25	life saving or protection of large populations	lower dose not practicable
>25	life saving or protection of large populations	only on a voluntary basis to persons fully aware of the risks involved

* This limit is expressed as the sum of the effective dose equivalent (EDE) and the committed effective dose equivalent (CEDE)

94. The Emergency Director decides that it is necessary to send someone into the Reactor Building (with Health Physics) to isolate a leak before Core Spray and RHR pumps are flooded. (No releases are underway and RPV level is being maintained at 60 inches with the Condensate System)

SELECT the ***maximum*** allowable dose limit that the Emergency Director may authorize:

a. 5 REM
b. 10 REM
c. 25 REM
d. > 25 REM

ANS: *b*
a,c,d incorrect, see 73EP-EIP-017-0S pg 6 of 13
NEW

KA# Generic 2.3.4	***OBJ#*** LT-30008.002	***REF*** LT-LP-30008	***COGNITIVE LVL*** 1

95. An ***Alert Emergency*** has been declared and the OSC has been manned. A fire in the Service Building breakroom kitchen requires that the OSC be evacuated due to excessive smoke. When the evacuation is ordered, the OSC ***workers*** should go to the:

a. East Wing of the Simulator Building
b. Classroom 172 in the Simulator Building
c. Simulator Building Cafeteria
d. Technical Support Center conference room.

ANS: *c*
a incorrect, normal for EOF
b incorrect, OSC supervision goes here
d incorrect, TSC is not an alternate
NEW

KA# Generic 2.4.42	***OBJ#*** 200.052.h.01	***REF*** EP-LP-30200	***COGNITIVE LVL*** 1

40. G2.4.48 001

Unit 1 is in an ATWS condition with Reactor Power oscillating between 15 and 45% RTP. The following indications exist at this time:

SBLC Pump Select Switch in Start Sys A position.
SBLC Squib Vlv Ready lights are LIT.
Rx Water Cleanup Vlv, 2G31-F004,Rx Wtr Cleanup Suction Vlv, is CLOSED.
SBLC Discharge Pressure is greater than reactor pressure.

Which ONE of the following describes the appropriate actions the Shift Supervisor should order?

A. Inhibit ADS and bypass RWCU filter/demineralizers per 34SO-G31-003-1S.

B. Continue to monitor SBLC and secure when the Cold Shutdown Boron Weight has been added.

C. Inhibit ADS, continue to monitor SBLC, and exit RC/Q when the reactor is subcritical.

D. Initiate SBLC per 34SO-C41-003-1S using the manual-local initiation method.

References: RCA RPV CONTROL (ATWS) Rev. 6
LR-20328 Rev. 6 pg 44-45 of 58.

A. Incorrect since 2G31-F004 is closed.

B. Incorrect since boron is not injecting.

C. Incorrect since boron is not being injected and RC/A exit requires subcritical with no boron injection.

D. Correct answer.

RO Tier:		SRO Tier:	T3
Keyword:	EOP PC CONTROL	Cog Level:	C/A 3.5/3.8
Source:	N	Exam:	HT02301
Test:	S	Misc:	TCK

125. G2.4.48 001

Unit 1 is in an ATWS condition with Reactor Power oscillating between 15 and 35% RTP. The following indications exist at this time:

SBLC Pump Select Switch in Start Sys A position.
SBLC Squib Vlv Ready lights are LIT.
SBLC LOSS OF CONTINUITY TO SQUIB VALVE is ALARMED.
Rx Water Cleanup Vlv, 2G31-F004,Rx Wtr Cleanup Suction Vlv, is CLOSED.
SBLC Discharge Pressure is greater than reactor pressure.

Which ONE of the following describes the appropriate actions the Shift Supervisor should order?

A. Inhibit ADS and bypass RWCU filter/demineralizers per 34SO-G31-003-1S.

B. Continue to monitor SBLC and secure when the Cold Shutdown Boron Weight has been added.

C. Inhibit ADS and inject boron using HPCI, RCIC or CRD to shutdown the reactor.

D. Reset ARI and continue to insert control rods per 31EO-EOP-103-1S to shutdown the reactor.

References: RCA RPV CONTROL (ATWS) Rev. 6
LR-20328 Rev. 6 pg 44-45 of 58.

A. Incorrect since reactor power oscillations are less than 25% and these actions are not yet directed by the ATWS procedure. Also, you don't isolate the RWCU demins unless there is a failure to isolate the system.

B. Incorrect since the squib valves did not fire and boron is not going into the reactor.

C. Incorrect since reactor power oscillations are less than 25% and these actions are not yet directed by the ATWS procedure.

D. Correct answer.

RO Tier:		SRO Tier:	T3
Keyword:	EOP PC CONTROL	Cog Level:	C/A 3.5/3.8
Source:	N	Exam:	HT02301
Test:	S	Misc:	TCK

QUESTIONS REPORT
for HT2002

1. G2.4.48 001

Unit 1 is in an ATWS condition with Reactor Power oscillating between 15 and 35% RTP. The following indications exist at this time:

SBLC Pump Select Switch in Start Sys A position.
SBLC Squib Vlv Ready lights are LIT.
SBLC LOSS OF CONTINUITY TO SQUIB VALVE is ALARMED.
Rx Water Cleanup Vlv, 2G31-F004,Rx Wtr Cleanup Suction Vlv, is CLOSED.
SBLC Discharge Pressure is greater than reactor pressure.

Which ONE of the following describes the appropriate actions the Shift Supervisor should order?

A. Inhibit ADS and bypass RWCU filter/demineralizers per 34SO-G31-003-1S.

B. Continue to monitor SBLC and secure when the Cold Shutdown Boron Weight has been added.

C. Inhibit ADS and inject boron using HPCI, RCIC or CRD to shutdown the reactor.

D. Reset ARI and continue to insert control rods per 31EO-EOP-103-1S to shutdown the reactor.

References: RCA RPV CONTROL (ATWS) Rev. 6
LR-20328 Rev. 6 pg 44-45 of 58.

A. Incorrect since reactor power oscillations are less than 25% and these actions are not yet directed by the ATWS procedure. Also, you don't isolate the RWCU demins unless there is a failure to isolate the system.

B. Incorrect since the squib valves did not fire and boron is not going into the reactor.

C. Incorrect since reactor power oscillations are less than 25% and these actions are not yet directed by the ATWS procedure.

D. Correct answer.

5. Higher clad temperatures increase the surface heat flux, generating steam and a pressure increase in the channel.

6. Moderator is discharged from both the top and bottom of the bundle with void generation rapidly decreasing power.

7. Inlet flow is restored by the lower plenum pressure/flow boundary conditions, and the process begins again.

Define Large Oscillation Threshold.

If > 25% (above LOT) Boron injection is required.

To provide reasonable assurance that any rapidly growing oscillations are mitigated in a timely manner, *boron is injected when neutron flux oscillations in excess of the Large Oscillation Threshold (LOT) commence and continue*. The LOT is a peak-to-peak neutron flux oscillation amplitude equal to or less than 25% yet sufficiently large to be distinguishable from the flux perturbations expected of a stable thermal-hydraulic system. Flux oscillations at or below the LOT during a failure-to-scam event are not expected to threaten fuel clad integrity.

Boron injected ONLY if oscillation persist.

Initiation of boron injection is required for oscillations in excess of the LOT only if they "commence and continue." This wording clarifies that boron need not be injected in response to a single flux pulse which subsequently subsides.

For conditions susceptible to oscillations, the oscillation growth is directly related to core inlet subcooling. Since the length of time required to raise in-core boron concentration is longer than the time required to reduce core inlet subcooling, boron injection alone may not prevent large irregular neutron flux oscillations from occurring. However, the magnitude of the oscillations is reduced as the concentration of boron in the core increases.

BEFORE

Torus water temperature reaches
BIIT curve limit
(graph 5)

If cannot maintain below HCTL, depressurization is required.

If Torus temperature and RPV pressure cannot be maintained below the Heat Capacity Temperature Limit, rapid depressurization of the RPV will be required.

Efforts to insert rods and inject boron occur simultaneously.

Concurrent execution of boron initiation and control rod insertion is needed to optimize efforts to achieve reactor shutdown.

The symptomatic approach to emergency response precludes assignment of priorities to these actions since the time at which boron must be injected into the RPV is dependent on the magnitude of the failure to scram event.

WAIT UNTIL

Reactor power oscillations exceed 25% peak to peak

The initiation and growth of these oscillations is principally dependent upon the subcooling at the core inlet.

Instabilities are manifested by oscillations in reactor power which, if the reactor cannot be shutdown, may increase in magnitude. If the oscillations remain small or moderately sized, they tend to repeat on approximately a two second period. Under certain circumstances, however, the oscillations may continue to grow and become sufficiently large and irregular to cause localized fuel damage. The initiation and growth of these oscillations is principally dependent upon the subcooling at the core inlet, the greater the subcooling, the more likely that oscillations will commence and increase in magnitude.

Although unlikely, it is possible for such oscillations to develop before corrective actions can be taken. The process by which large irregular neutron flux oscillations can develop within a fuel bundle assembly occurs as follows:

1. Subcooled water enters the fuel bundle.
2. The resulting positive reactivity addition causes a rapid increase in bundle power.
3. The increased energy deposition in the fuel increases the fuel and clad temperature.
4. Doppler (fuel temperature) feedback terminates the power increase.

G THE FOLLOWING

THEN teminate boron injection
AND
perform RPV Control (Non-ATWS)

GO TO RC point A

Go to 34AB-C71-001-1S

ON TLY

C/L

RC/Q

1 2

ctions:
ber 34AB-C71-001-1S
Y DIESEL GENERATOR

O CP-3
<

CP-1

CP-2

TE 1
ad = ig
ed ig

WHILE PERFORMING THE FOLLOWING

IF reactor is shutdown (subcritical with IRMs below range 6)
AND
NO boron has been injected into RPV

THEN perform scram procedure

GO TO 34AB-C71-001-1S
AND
34AB-C11-005-1S

Confirm reactor mode switch in SHUTDOWN

Confirm ARI initiation

Confirm recirc flow runback to minimum

IF reactor power is above 5%
OR
CANNOT be determined

THEN trip recirc pumps

PERFORM CONCURRENTLY

WAIT UNTIL
reactor power oscillations exceed 25% peak to peak

BEFORE
Torus water temperature reaches BIIT curve limit (Graph 5)

Reset ARI and insert control rods per 31EO-EOP-103-1S

BORON INJECTION IS REQUIRED

Initiate SBLC per 34SO-C41-003-1S

Inhibit ADS

Evaluate override on CP-3 Chart at coordinate C-2

IF boron CANNOT be injected with SBLC

THEN Inject boron using one or more of the following per 31EO-EOP-109-1S:

- CRD
- HPCI
- RCIC

WHILE PERFORMING THE FOLLOWING

IF SBLC tank level drops to 8%

THEN trip the SBLC pumps

IF RWCU is NOT isolated

THEN bypass RWCU filter/demineralizers per 34SO-G31-003-1S

WAIT UNTIL
Cold Shutdown Boron Weight (Table 3) has been injected