ATTACHMENT 9

MNGP Code Class Color Classifications and Drawings (P & IDs)

5.0 FIGURES

FIGURE

5.1 Color Code RED (Quality Group "A")

5.1.1 Systems and components within this quality group are part of the Reactor Coolant Pressure Boundary. This boundary extends to and includes the outermost containment isolation valve in the main steam and feedwater piping.

5.1.2 Quality Group "A" includes pressure vessels, piping, pumps and valves that are either:

A. Part of the Reactor Coolant System,

OR

B. Connected to the Reactor Coolant System up to and including any and all of the following:

1. The outermost containment isolation valve (in system piping that penetrates primary reactor containment).

2. The second of two valves normally closed during normal reactor operation (in system piping that does not penetrate primary reactor containment).

3. The Reactor Coolant System safety and relief valves.

NOTE: The discharge lines of all Safety Related safety and relief valves are classified as functionally Safety Related and are color coded BROWN (see FIGURE 5.5).

C. EXCEPTIONS: Certain components that are connected to the Reactor Coolant System, and therefore form part of the reactor coolant pressure boundary, may be classified as Quality Group "B" in lieu of "A" provided:

1. In the event of postulated failure of the component during normal reactor operation, the reactor can be shut down and cooled down in an orderly manner, assuming make-up is provided by the reactor coolant make-up system (at Monticello, this is interpreted to mean 1" and smaller lines and equipment attached to these lines);

OR

FIGURE

5.1 Color Code RED (Quality Group "A") (Cont'd)

2. The component is or can be isolated from the Reactor Coolant System by two valves in series (both closed, both open, or one closed and the other open). Each valve must be capable of automatic actuation and, assuming the other valve is open, its closure time must be such that, in the event of postulated failure of the component during normal reactor operation, each valve remains operable and the reactor can be shut down and cooled down in an orderly manner, assuming make-up is provided by the reactor coolant make-up system(s) only (at Monticello, this is interpreted to mean 1" and smaller lines and equipment attached to these lines).

FIGURE

5.2 **Color Code BLUE (Quality Group "B")**

5.2.1 Systems in this quality group include water and steam containing pressure vessels, heat exchangers (other than turbine and condensers), storage tanks, piping, pumps, and valves that are part of:

A. The reactor pressure boundary but excluded from the requirements of Quality Group "A".

B. Systems or portions of systems important to safety that are designed for:

1. Reactor shutdown,
2. Emergency core cooling,
3. Post-accident containment heat removal,
4. Post-accident fission product removal, or
5. Residual heat removal.

C. Systems or portions of systems connected to the reactor coolant boundary that are not capable of being isolated from the boundary during all modes of normal reactor operation by two valves, each of which is either normally closed or capable of automatic closure.

D. The primary containment vessel (drywell and torus) and all appurtenances attached to the containment vessel.

5.2.2 Instruments and instrument lines are classified as described in FIGURE 5.6 of this Instruction.

NOTE: **At Monticello, those portions of the main steam piping outboard of the outermost containment isolation valves up to the turbine stop valves are not committed to under Reg. Guide 1.26 (see QLEC Meeting Minutes dated 10/22/91).**

FIGURE

5.3 Color Code GREEN (Quality Group "C")

5.3.1 Systems and components in this Quality Group include water-, steam-, and radioactive-waste-containing pressure vessels, heat exchangers (other than turbines and condensers), storage tanks, piping, pumps, and valves that are not part of the reactor coolant boundary or Quality Group "B", but are part of:

A. Cooling water and auxiliary feedwater systems or portions of these systems important to safety (see note below) that are designed for:

1. Emergency core cooling,
2. Post-accident containment heat removal,
3. Post-accident containment atmosphere cleanup,
4. Residual heat removal from the reactor and from the spent fuel storage pool (including primary and secondary cooling systems), or
5. Spent fuel storage pool make-up water system.

NOTE: **Portions of these systems that are required for safety functions and that either do not operate during any normal mode of reactor operation or cannot be tested adequately, should be classified as Quality Group "B".**

B. Cooling water and seal water systems or portions of these systems important to safety that are designed to ensure the proper functioning of other components important to safety, such as the emergency diesel generators and the control room.

C. Systems or portions of systems that are connected to the reactor coolant boundary and are capable of being isolated from that boundary during all modes of normal reactor operation by two valves, each of which is normally closed or capable of automatic closure. Components in effluent lines may be classified as Quality Group "D" (see FIGURE 5.4) provided they are capable of being isolated from the reactor coolant pressure boundary by an additional valve which has a high leaktight integrity.

FIGURE

5.3 Color Code GREEN (Quality Group "C") (Cont'd)

D. Systems, other than radioactive waste management systems, not covered by 5.3.1.A., B., or C. above that contain or may contain radioactive material and whose postulated failure would result in conservatively calculated off-site doses (using meteorology as recommended by NRC Reg Guide 1.3) that exceed 0.5 rem to the whole body or its equivalent to any part of the body. For those items located in Seismic Category I structures, only single component failures need be assumed.

NOTE: **No credit for automatic isolation from other components in the system or for treatment of released material should be taken unless the isolation or treatment capability is designed to the appropriate seismic and quality group standards and can withstand loss of off-site power and a single failure of an active component.**

5.3.2 Instruments and instrument lines are classified as described in FIGURE 5.6 of this instruction.

FIGURE

5.4 Color Code YELLOW (Quality Group "D")

5.4.1 Quality Group "D" includes water- and steam-containing components that are not included in Quality Groups "A", "B", or "C", but that are part of Safety Related systems or portions of Safety Related systems that contain or may contain radioactive material.

5.4.2 For sample lines connected to Safety Related systems, this Quality Group applies to:

A. The portion of the sample line that is not isolated from the Safety Related system by a valve that is normally closed or is capable of automatic or remote closure. (This is classified as safety related).

OR

B. The portion of the sample line to and including any component that would serve to adequately restrict flow in the event of a downstream sample line break such that previously analyzed release rates are not exceeded. (This is classified as non-safety related).

NOTE: **The Safety Evaluation for Modification 89Z003 documents that 1/4" diameter and smaller lines provide adequate flow restriction. See the 12/18/90 QLEC minutes.**

5.4.3 Instruments and instrument lines are classified as described in FIGURE 5.6 of this instruction.

FIGURE

5.5 Color Codes PURPLE & BROWN (Quality Group "F")

5.5.1 Quality Group "F" consists of systems and components whose function prevents or mitigates the consequences of postulated nuclear accidents that could cause undue risk to the health and safety of the general public.

5.5.2 Two color codes have been established to identify Quality Group "F" systems and components:

A. PURPLE is used to identify functionally Safety Related electrical/electronic items, and

B. BROWN is used to identify other types of functionally Safety Related equipment (piping, mechanical, etc.)

C. Systems or components that are Safety Related due to both pressure integrity (Quality Groups "A", "B", "C", or "D") AND function ***SHALL*** be colored RED, BLUE, GREEN, or YELLOW (as applicable) and outlined in BROWN.

5.5.3 A series of Functional Codes has been created to further define the role of systems and components that are classified as Quality Group "F". These functional codes do not appear on the color coded P&IDs, but may occasionally be encountered in various documents (meeting minutes, memorandums, etc.) regarding the Color Coded P&ID Q-List Extension.

A. The most notable Quality Group "F" systems and components and their associated functional codes are as follows:

	Functional Code
1. Electrical/Electronic systems and components that:	F-1

a. Provide an independent safety function, or

b. In the event of failure (grounding, open circuiting, electrical shorting, or mechanical failure) could prevent a safety system from performing its intended safety function. See the electrical and instrumentation system component exclusion criteria of 4 AWI-01.03.01 (QUALITY ASSURANCE PROGRAM BOUNDARY) for further information.

FIGURE

5.5 Color Codes PURPLE & BROWN (Quality Group "F") (Cont'd)

		Functional Code
2.	Safety Related instrumentation, subject to the following amplification:	F-2
	a. Instruments which monitor parameters or process signals that may cause, permit, or bypass actions required to satisfy "Limiting Conditions for Operations (LCO)" identified in Section 3 of the Technical Specifications ***SHALL*** be classified as functionally Safety Related.	
	b. Instruments that monitor or control the operation of Safety Related equipment, or whose failure could cause a malfunction of the associated Safety Related equipment ***SHALL*** be classified as functionally Safety Related.	
	c. Annunciators, indicators, alarms, and recorders are NOT considered Safety Related if their malfunction does not interfere with the function of Safety-Related circuitry.	
	d. Instruments that are Safety Related due to their function only ***SHALL*** be colored BROWN.	
	e. Instruments that are Safety Related due to both pressure integrity AND function ***SHALL*** be colored RED, BLUE, GREEN, or YELLOW (as applicable) and outlined in BROWN.	
3.	Safety Related safety and relief valve discharge lines.	F-3
4.	The Quality Group designation of a component support is dependent on its relationship with its associated pressure retaining component. Hangers and component supports including non-safety related piping up to the first hanger or support beyond the associated safety-related component	F-4

NOTE: **Hangers and supports are not shown on Color Coded P&ID Q-List Extension drawings.**

l/djm

FIGURE

5.5 Color Codes PURPLE & BROWN (Quality Group "F") (Cont'd)

		Functional Code
5.	Instrument and Service Air System piping (portions required to ensure the functioning of Safety Related components or equipment).	F-5
6.	Diesel Engines, Generators, Oil Systems, and Auxiliary Support Systems	F-6
7.	Standby Gas Treatment Ventilation	F-7
8.	Containment Isolation Dampers	F-8
9.	Off-Gas Sample System	F-9
10.	Off-Gas Stack Sample System	F-10
11.	Safety Related Water- or Steam-Carrying Piping and valves inside the Suppression Chamber	F-11
12.	Emergency Service Water Back-up Piping	F-12
13.	Reactor Component Handling Equipment	F-13

FIGURE

5.6 Color Coding of Instrument Lines

5.6.1 Instrument lines connected to Safety Related systems ***SHALL*** be classified as follows:

A. If the instrument line is used to actuate a safety system, the line and sensing instrumentation ***SHALL*** be of the same Quality Group Designation ("A", "B", "C", "D", or "F") as the system to which it is attached. In this situation, the sensing instrument should be either colored solid BROWN or circled in BROWN per the direction of Section 5.5.3.A.2. of this Instruction. (These instrument lines are classified as safety related).

B. If the instrument line is not used to actuate a safety system, but is connected via a common header with instrumentation that is functionally Safety Related, the line and sensing instrumentation ***SHALL*** be of the same pressure integrity Quality Group Designation ("A", "B", or "C") as the system to which the header is attached. (This instrument line is classified as safety related).

C. If the instrument line is not used to actuate a safety system and is not connected with functionally Safety Related instrumentation via a common header, (e.g., the instrument line is classified as non-safety related):

1. It ***SHALL*** be of the same Quality Group Designation as the system to which it is attached from the point of connection up to and including the root valve or instrument isolation valve.

2. Beyond the root valve or instrument isolation valve (up to and including the sensing instrumentation), it ***SHALL*** be classified as Quality Group "D".

FIGURE

5.7 Color Code ORANGE (Special Concern)

5.7.1 As a result of Open Item No. 9 of NRC Inspection Report 50-263/87005 (Core Spray SSFI Report), NSP committed (Licensee Commitment Numbers M87028A and M87071A) to:

A. Include items related to Regulatory Guide 1.97, ATWS, ASDS, High Energy Line Break and other special concern items deemed appropriate by Site Management for designation with an additional color code,

B. Provide a requirement that the system engineers be consulted for non-routine maintenance, modification and procurement activities associated with these items, and

C. Conduct a systematic approach to update the involved color coded P&IDs.

As a result of these commitments, the ORANGE color code was established for use on the color coded P&IDs (Q-List Extension) to recognize those items of "special regulatory and/or management concern."

NOTE: The CHAMPS database identifies the listing of all the "special concern codes" for equipment identified in the database.

5.7.2 If the designated equipment meets the criteria in Section 5.7.1, it will be color coded in the following manner:

A. Equipment that is not Safety Related, but for which some special concern exists, should be colored solid ORANGE.

B. Equipment that is Safety Related, and for which an additional special concern exists, ***SHALL*** be colored RED, BLUE, GREEN, YELLOW, BROWN or PURPLE as applicable, and should be outlined in ORANGE.

NH-36032

VALVES

- GATE (NORMALLY OPEN)
- GATE (NORMALLY CLOSED)
- GLOBE
- MANUAL REMOTE OPERATED
- CHECK
- BUTTERFLY SWING CHECK
- BUTTERFLY
- PLUG OR BALL
- NEEDLE
- FLOW CONTROL
- STOP CHECK STRAIGHT
- SAUNDERS TYPE
- THREE WAY
- FOUR WAY
- ANGLE
- STOP CHECK ANGLE
- GLAND LEAK OFF
- GLAND SEAL WATER
- DIAPHRAGM OPERATED GLOBE VALVE
- EXPLOSIVE ACTUATED VALVE
- CONTROL AIR SUPPLY, PROCESS AIR SUPPLY, LOSS OF CONTROL AIR (FAIL CLOSED), ATM, LOSS OF CONTROL AIR (FAIL OPEN) — DIAPHRAGM OPERATED 3 WAY CONTROL VALVE
- RV — RELIEF
- CV — (HAND WHEEL AS SPECIFIED) DIAPHRAM OPERATED CONTROL (OPENS ON AIR FAILURE)
- CV — DIAPHRAM OPERATED CONTROL (CLOSES ON AIR FAILURE)
- SV — N.E. SOLENOID (3 WAY); DE-ENERGIZED CLOSED; AIR SUPPLY; ENERGIZED CLOSED
- HO — HYDRAULIC OPERATED
- MO — ELECTRIC MOTOR OPERATED (O-C LIGHT SHOWN ONLY FOR MORE THAN ONE SET); INDICATES DOUBLE PACKED STEM (TYPICAL)
- PCV — SELF-CONTAINED PRESSURE CONTROL
- TCV, FCV, LCV — TEMPERATURE, FLOW, LEVEL — SELF-CONTAINED CONTROL
- AO — PISTON-AIR OPERATED

SYMBOLS

- EJECTOR OR EDUCTOR
- INCREASER, REDUCER
- WELD CAP
- SCREWED CAP
- HOSE CONNECTION (H.C.)
- BLIND FLANGE (B.F.)
- UNION
- EXHAUST HEAD
- ATMOSPHERIC VENT
- FLEXIBLE CONNECTION
- CLOSED DRAIN
- OPEN DRAIN FUNNEL
- (ORW) DRAIN SYSTEM
- AV — AIR VENT
- DT — DRAIN TRAP
- ST — STEAM TRAP
- FE — FLOW NOZZLE ELEMENT
- YS — 'Y' TYPE STRAINER
- XJ — EXPANSION JOINT
- EXCESS FLOW CHECK VALVE
- FM — FLOW METER
- PSD — RUPTURE DISC
- VAR — VACUUM AIR RELEASE VALVE
- SX — SAMPLE TEST POINT
- RE — RADIATION DETECTOR
- SC — SAMPLE COOLER
- INSULATED COUPLING OR INSULATED UNION
- SN — SAMPLE NOZZLE
- FI — IN-LINE FLOW INDICATOR (ROTAMETER)
- FE — METERING ORIFICE PLATE

SYMBOLS

- RO — RESTRICTING ORIFICE
- IF — INSULATING FLANGE
- SPECTACLE FLANGE
- FG — SIGHT FLOW GLASS
- BS — BASKET STRAINER (SIMPLEX)
- BS — BASKET STRAINER (DUPLEX)
- AND, OR — LOGIC

LINE NUMBERS

LINE IDENTIFICATION LETTERS
LINE NUMBER
PIPE SIZE
PIPE CLASS
FD2-10"-DE

VALVE NUMBERS

VALVE SIZE — MARK No. 3"-54

LINES

- PROCESS LINE MAIN
- PROCESS LINE AUXILIARY
- BOILER CODE PIPING
- INSTRUMENT CONTROL AIR TUBING
- INSTRUMENT PRIMARY LINE
- INSTRUMENT CAPILLARY TUBING
- INSULATED AND HEAT TRACED LINE
- INSULATED (ONLY) LINE (OR)
- ELECTRICAL AND THERMOCOUPLE LEADS
- M-XXX / NH-XXXXX (0,5) — DRAWING REFERENCE; NSP CONTROLLED DRAWING NUMBER; DRAWING COORDINATE
- BURIED PIPE
- CONTAINMENT PENETRATION (UNSLEEVED) — INSIDE / OUTSIDE
- CONTAINMENT PENETRATION (SLEEVED)
- CONTAINMENT PENETRATION WITH INACCESSIBLE WELDS FOR IWE INSPECTION (P)

INSULATED (ONLY) LINES

TYPICAL NOTATION PIPE SPEC. CHANGE

A — B
THIS WELD IS IN THE LOWER PIPE CLASS

PUMPS

- CENTRIFUGAL
- POSITIVE DISPLACEMENT

INSTRUMENTATION

- LOCAL BOARD NUMBER (TYPICAL) — C52 (10-120) — PS — H, L — INSTRUMENT VARIABLE
- CE-APED M.P.L. No. — LOCAL BOARD MOUNTED
- PI — LOCALLY MOUNTED INSTRUMENT
- LR — PT-1 — DENOTES TERMINAL NUMBER FOR MULTI-CHANNEL INSTRUMENT
- E/P OR P/E — ELECTRICAL PNEUMATIC TRANSDUCER LOCALLY MOUNTED
- HCS OR C01 HCS — HAND CONTROL STATION
- HS OR C23 HS — HAND SWITCH
- C04 — PR — CONTROL ROOM BOARD NUMBER (TYPICAL) — CONTROL ROOM BOARD MOUNTED INSTRUMENT
- C06 — TR, PR — CONTROL ROOM BOARD NUMBER (TYPICAL) — CONTROL ROOM BOARD MOUNTED COMBINATION INSTRUMENT
- C18 E/S — SPECIAL ELECTRIC POWER SUPPLY
- AC — AUTOMATIC CONTROL
- TDR — TIME DELAY RELAY
- T — COMPUTER ANALOG INPUT
- PT — COMPUTER INSTRUMENT
- C — COMPUTER DIGITAL INPUT
- C10 — H, L — HIGH, LOW — ALARM
- C30 — O, C — OPEN, CLOSED — LIGHT

HVAC SYMBOLS

- INTAKE TORNADO DAMPER
- EXHAUST TORNADO DAMPER
- UNIT HEATER
- PO — PNEUMATIC OPERATED DAMPER
- BACKDRAFT DAMPER
- MANUAL DAMPER
- STANDARD MOTOR OPERATED DAMPER
- LOW-LEAKAGE MOTOR OPERATED ISOLATING DAMPER
- H, C — HEATING COIL
- H, E — HEATING ELEMENT
- C, C — COOLING COIL
- C, DX — DIRECT EXPANSION COOLING COIL
- FD — FIRE DAMPER OR
- V-DF-100 — FIRE DAMPER
- LOW — FILTER HIGH OR LOW EFFICIENCY, HEPA OR CHARCOAL
- BALANCE DAMPER
- MANUAL SHUT-OFF
- DUCT
- FREE AIR PASSAGE
- ROUGHING FILTER
- OUTSIDE AIR INTAKE LOUVER
- Px — PRESSURE TAP
- CENTRIFUGAL FAN
- S — SOLDERED DUCT
- EXHAUST
- SUPPLY

FIRE PROTECTION SYMBOLS

- HOSE STATION
- C — HOSE CABINET
- D — DELUGE VALVE
- S — SPRINKLER ALARM VALVE
- P — SPRINKLER PREACTION VALVE
- FIRE HYDRANT
- FHS — FIRE HOSE STATION

FUNCTION / TYPE / MEASURED VARIABLE		METER: INDICATOR	METER: RECORDER	CONTROLLER: BLIND	CONTROLLER: INDICATING	CONTROLLER: RECORDING	INDICATING TRANSMITTER	TRANSMITTERS	ELEMENTS	SWITCH (HIGH)	SWITCH (LOW)	SWITCHES	INDICATING SWITCH	INDICATING TRANSMITTING SWITCH	AMPLIFIER	DRIVE	PERIOD OR RATE OF CHANGE	COMPUTING DEVICE	RELAY OR AUTO SELECTOR	TEST POINTS	MONITOR	COOLER	ISOLATOR	SUMMER	ANALYZER	ALARM	CONVERTER
PRESSURE	P	PI	PR	PC	PIC	PRC		ADD SUFFIX "T" TO INSTRUMENT SYMBOL (eg FT, TT, LT)	ADD SUFFIX "E" TO INSTRUMENT SYMBOL (eg FE, TE, LE)			PS	PIS				Pt	PCp		Px							
TEMPERATURE	T	TI	TR	TC	TIC	TRC						TS	TIS				Tt	TCp	Tre	Tx							
FLOW	F	FI,FG	FR	FC	FIC	FRC				FSH	FSL	FS	FIS	FITS			Ft	FCp	Fre	Fx			FY	FE			
LEVEL	L	LI,LG	LR	LC	LIC	LRC				LSH	LSL	LS	LIS	LITS			Lt	LCp		Lx							
CONDUCTIVITY	C	CI	CR				CIT					CS									CM						
PRESSURE DIFFERENTIAL	dP	dPI	dPR	dPC	dPIC							dPS	dPIS										dPY				
HYDROGEN ION CONC	pH		pHR																								
MOISTURE	M	MI	MR									MS															
NEUTRON	N	NI	NR									NS			NA		Nt	NCp									
NEUTRON PERIOD	NP	NPI	NPR														NPt										
NEUTRON POWER	NWo																NWot	NWoCp									
OXYGEN	O_2	O_2I	O_2R									O_2S													O_2AN		
POSITION	Po	Poi		PoC		PoR						PoS															
POWER	Wo		WoR	WoC																							
RADIATION	R	RI	RR		RIC	RRC						RS									RM						
SPEED	Sp	SpI		SpC								SpS				SpD	Spt										
DENSITY	D	DI	DR	DC																							
VIBRATION	V		VR									VS									VM						
SAMPLE	S																			Sx		Sc					
SEISMIC	Sm		SmR									SmS															
DISSOLVED OXYGEN	Do						DOIT																		DOAN		
TOTAL ORGANIC CARBON	A	AI																									
HYDROGEN	H_2																								H_2AN		
LEVEL DIFFERENTIAL	dL											dLS															
TEMPERATURE DIFFERENTIAL	dT																									dTA	
VOLTAGE TO CURRENT																											E/I
CURRENT TO VOLTAGE																											I/E

MISCELLANEOUS ABBREVIATIONS:

- A.L. — AIR LOCK
- A.P.E.D. — ATOMIC POWER EQUIP. DEPT. OF G.E. CO.
- A/S — AIR SUPPLY
- BO — BALANCE DAMPER
- BOD — BACKDRAFT DAMPER
- AW — ACID WASTE (CORROSIVE, CAUSTIC)
- CRW — EQUIPMENT (CLOSED) RADWASTE
- D. — INDICATED DOUBLE PACKED STEM
- F.A.L — FAIL-AS-IS
- F.C. — FAIL CLOSED
- F.D. — FIRE DAMPER
- F.O. — FAIL OPEN
- INT — INTEGRATOR
- L.O. — LOCK OPEN — L.O.
- L.C. — LOCK CLOSE — L.C.
- M.A. — MECHANICAL ALTERNATOR
- N. — MEETS A.P.E.D. REQUIREMENTS FOR NUCLEAR SERVICE
- N.D. — DENOTES NORMALLY DE-ENERGIZED
- N.E. — DENOTES NORMALLY ENERGIZED
- NW — NORMAL WASTE (CONVENTIONAL)
- ORW — FLOOR (OPEN) RADWASTE
- OW — OILY WATER WASTE
- P.P.S — PLANT PROTECTIVE SYSTEM
- R.M. — REMOTE MANUAL
- S. — SUMMER (CFM)
- S.P. — SET POINT
- SW — SANITARY WASTE
- TOT. — TOTAL
- t_{RS} — TEMP ROOM SUMMER
- t_{RW} — TEMP ROOM WINTER
- t_{SS} — TEMP. SUPPLY SUMMER
- t_{SW} — TEMP SUPPLY WINTER
- W — WINTER (CFM)
- W.C.S.P. — WATER COLUMN STATIC PRESSURE
- * — FURNISHED WITH ASSOCIATED EQUIPMENT
- ❶ — FURNISHED BY A.P.E.D.
- ② — CONNECTION NUMBER ON EQUIPMENT DRAWING

REVISIONS

J AS BUILT: REDRAWN & REVISED IN ACCORDANCE WITH SRI 92-025 PER DRR: MO-93-238
DWN: RHH 3-1-94
CHK: ATD 3-1-94
MOD:
FILMED: 3-11-94

K AS BUILT: REVISED TO REFLECT THE ADDITION OF VARIOUS PUMPS TO THE P&ID LEGEND PER DRR: MO-94-55
DWN: RHH 5-12-94
CHK: CEP 6-29-94
MOD: 88M041
FILMED: 7-6-94

L AS BUILT: REVISED TO REFLECT THE ADDITION OF ALTERNATE FIRE DAMPER SYMBOL PER DRR: MO-95-89
DWN: RHH 3-1-95
CHK: RAH 3-2-95
MOD: 93Q355
FILMED: 3-7-95

M AS BUILT: REVISED TO REFLECT THE ADDITION OF HVAC SYMBOLS PER DRR: MO-95-120
DWN: RHH 4-12-95
CHK: RLO 4-12-95
MOD: 93Q355
FILMED: 4-21-95

N AS BUILT: REVISED TO REFLECT THE BLEEDER TRIP VALVES REPLACEMENT MOD. & ADDED INSULATED AND HEAT TRACED SYMBOLS PER DRR: MO-96-072
DWN: RHH 4-25-96
CHK: PEB 5-2-96
MOD: 95Q255
FILMED: 5-7-96

P AS BUILT: REVISED CONTAINMENT PENETRATION TYPES AND NUMBERS AS INDICATED PER DRR: MO-01-0184
DWN: JJP 5-6-02
CHK: DRN 5-21-02
MOD:
FILMED: 6-5-02

COLOR LEGEND

RED
BLUE
GREEN
YELLOW
ORANGE
BROWN
PURPLE

CONTROLLED
See Critical Drawing File for Current System Configuration

REVIEWED BY Q-LIST EXTENSION COMMITTEE: 6-17-02 DATE
APPROVED BY: QLEC CHAIRMAN 6-25-02 DATE

This map/document is to assist employees in the performance of their jobs. Your personal safety is provided for by using safety practices, procedures and equipment as described in safety training programs, manuals and SPAR's.

M-100
MONTI CAD DWG "J"

NSP — MONTICELLO NUCLEAR GENERATING PLANT UNIT 1

SIGNIFICANT NUMBER 8700 | GROUP 1 2 3 4 5 6 | 1 4420 1 CL

MONTICELLO NUCLEAR GENERATING PLANT
P & I D — LEGEND (P)

NORTHERN STATES POWER COMPANY
MINNEAPOLIS

SCALE: NONE | REV P
NH-36032

NH-36032-1

M-No.	DRAWING No.	DRAWING TITLE
M-100	NH-36032	P & ID – LEGEND
M-100-1	NH-36032-1	P & ID INDEX
M-102	NH-36033	MAIN STEAM
M-103	NH-36034	TURBINE & EXTRACTION STEAM SHEET 1
M-104	NH-36035	TURBINE & EXTRACTION STEAM SHEET 2
M-104-1	NH-36035-2	STEAM JET AIR EJECTORS
M-105	NH-36036	CONDENSATE & FEEDWATER SHEET 1
M-106	NH-36037	CONDENSATE & FEEDWATER SHEET 2
M-106-1	NH-36037-2	RFP SHAFT SEAL INJECTION AND DRAIN SYSTEM
	NH-119259	ZINC INJECTION PASSIVATION SYSTEM (GEZIP)
M-107	NH-36038	CONDENSATE DEMINERALIZER SYSTEM SHEET 1
M-107	NH-36038-2	CONDENSATE DEMINERALIZER SYSTEM SHEET 2
M-108	NH-36039	CONDENSATE & DEMINERALIZED WATER STORAGE SYSTEMS
M-109	NH-36040	MAKEUP DEMINERALIZER SYSTEM
M-110	NH-36041	SERVICE WATER SYSTEM SHEET 1
M-110-2	NH-36041-2	SERVICE WATER SYSTEM SHEET 2
M-111	NH-36042	REACTOR BUILDING COOLING WATER SYSTEM
M-111-1	NH-36042-2	REACTOR BUILDING COOLING WATER SYSTEM
M-112	NH-36664	RHR SERVICE WATER & EMERGENCY SERVICE WATER SYSTEMS
M-114-1	NH-85509	SERVICE CONDENSATE SYSTEM, RADWASTE BUILDING SHEET 1
M-114-2	NH-85509-2	SERVICE CONDENSATE SYSTEM, RADWASTE BUILDING SHEET 2
M-115	NH-36241	NUCLEAR BOILER SYSTEM-STEAM SUPPLY
M-115-1	NH-36241-1	REACTOR PRESSURE RELIEF
M-116	NH-36242	VESSEL INSTRUMENTATION NUCLEAR BOILER SYSTEM
M-116-1	NH-36242-1	JET PUMP INSTRUMENTATION NUCLEAR BOILER SYSTEM
M-116-2	NH-36242-2	RPV REFERENCE LEG BACKFILL SYSTEM NUCLEAR BOILER SYSTEM
M-117	NH-36243	RECIRC LOOPS NUCLEAR BOILER SYSTEM SHEET 1
M-117	NH-36243-1	RECIRC LOOPS PUMPS AND MOTORS NUCLEAR BOILER SYSTEM SHEET 2
M-118	NH-36244	CONTROL ROD HYDRAULIC SYSTEM SHEET 1
M-119	NH-36245	CONTROL ROD HYDRAULIC SYSTEM SHEET 2
M-120	NH-36246	RESIDUAL HEAT REMOVAL SYSTEM SHEET 1
M-121	NH-36247	RESIDUAL HEAT REMOVAL SYSTEM SHEET 2
M-122	NH-36248	CORE SPRAY SYSTEM
M-123	NH-36249	HIGH PRESSURE COOLANT INJECTION SYSTEM (STEAM SIDE)
M-123-1	NH-36249-1	HPCI HYDRAULIC CONTROL AND LUBRICATION SYSTEM
M-124	NH-36250	HIGH PRESSURE COOLANT INJECTION SYSTEM (WATER SIDE)
M-125	NH-36251	RCIC (STEAM SIDE)
M-126	NH-36252	RCIC (WATER SIDE)
M-127	NH-36253	STANDBY LIQUID CONTROL SYSTEM
M-128	NH-36254	REACTOR WATER CLEANUP SYSTEM
M-129	NH-36255	REACTOR WATER CLEANUP FILTER/DEMINERALIZER SYSTEM
M-130	NH-46162	PRIMARY CONTAINMENT NITROGEN CONTROL SYSTEM
	NH-91197	CONTAINMENT ATMOSPHERE MONITORING SYSTEM
	NH-96042-1	POST ACCIDENT SAMPLING SYSTEM
M-131	NH-36049-1	COMPRESSED AIR SYSTEM
M-131	NH-36049-2	INSTRUMENT AIR SYSTEM
M-131	NH-36049-3	INSTRUMENT AIR – TURBINE BUILDING
M-131	NH-36049-4	SERVICE AIR SYSTEM
M-131	NH-36049-9	CONDENSATE DEMIN BACKWASH AIR SYSTEM
M-131	NH-36049-10	ALTERNATE N2 SUPPLY SYSTEM
M-131	NH-36049-11	INSTRUMENT AIR – TURBINE BUILDING
M-131	NH-36049-12	INSTRUMENT AIR – REACTOR BUILDING & DRYWELL
M-131	NH-36049-13	INSTRUMENT AIR – REACTOR BUILDING
M-131	NH-36049-14	INSTRUMENT AIR – REACTOR BUILDING
M-131	NH-36049-15	AIR SUPPLY TO OUTBOARD (MSIV'S)
	NH-54817-3	INSTRUMENT AIR – RECOMBINER BLDG.
M-132	NH-36050	TURBINE LUBE OIL SYSTEM
M-133	NH-36051	DIESEL OIL SYSTEM SHEET 1
M-133	NH-36051-1	DIESEL OIL SYSTEM SHEET 2
M-134	NH-36048	FIRE PROTECTION SYSTEM INTERIOR LOCATIONS
M-135	NH-36256	FUEL POOL COOLING & CLEANUP SYSTEM
M-136	NH-36257	FUEL POOL FILTER/DEMIN SYSTEM
M-137	NH-36043	OPEN (DIRTY) RADWASTE SUMP SYSTEM
M-138	NH-36044	CLOSED (CLEAN) RADWASTE SUMP SYSTEM
M-139	NH-36045	CLEAN RADWASTE SYSTEM
M-140	NH-36046	DIRTY RADWASTE SYSTEM SHEET 1
M-140	NH-36046-2	DIRTY RADWASTE SYSTEM SHEET 2
M-141	NH-36047-1	RADWASTE SOLIDS HANDLING SYSTEM SHEET 1
M-141-2	NH-36047-2	RADWASTE SOLIDS HANDLING SYSTEM SHEET 2
	NH-119082	RDS-1000 SYSTEM
M-142	NH-36159	OFF-GAS SYSTEM SHEET 1
M-142	NH-36159-2	OFF-GAS STACK GAS MONITOR CH. A SHEET 2
M-142	NH-36159-3	OFF-GAS STACK GAS MONITOR CH. B SHEET 3
	NH-54817-4	OFF-GAS MODIFICATION TRAIN "A" ENGR. FLOW DIAGRAM RECOMBINER BUILDING
	NH-54818-1	OFF-GAS MODIFICATION TRAIN "B" ENGR. FLOW DIAGRAM RECOMBINER BUILDING
	NH-54822-2	OFF-GAS MODIFICATION ENGR. FLOW DIAGRAM OFF-GAS STORAGE AREA
	NH-54823-2	OFF-GAS MODIFICATION ENGR. FLOW DIAGRAM COMPRESSOR BUILDING
	NH-54823-3	OFF-GAS MODIFICATION ENGR. FLOW DIAGRAM COMPRESSOR BUILDING
	NH-54823-4	OFF-GAS MODIFICATION ENGR. FLOW DIAGRAM COMPRESSOR BUILDING
M-143	NH-36258	PRIMARY CONTAINMENT & ATMOSPHERIC CONTROL SYSTEM
	NH-94896	COMBUSTIBLE GAS CONTROL SYSTEM DIV I (EAST)
	NH-94897	COMBUSTIBLE GAS CONTROL SYSTEM DIV II (WEST)
	NH-116629	HARD PIPE VENT SYSTEM
M-144	NH-36829	TURBINE BLDG. SAMPLE SYSTEM – FLOW DIAGRAM
M-145	NH-36881	STANDBY GAS TREATMENT FLOW DIAGRAM
M-146	NH-36348	AUXILIARY HEATING SYSTEM HEATING BOILER
M-147	NH-36259	AUXILIARY & HEATING STEAM SYSTEM – TURBINE BUILDING
M-147-1	NH-36259-1	AUXILIARY & HEATING STEAM SYSTEM NON-1E ELEC. EQUIP. ROOM, STANDBY DIESEL GEN. BLDG., TURB. BLDG. ADDITION, HEATING BOILER ROOM & MACHINE SHOP
M-147-2	NH-36259-2	AUXILIARY & HEATING STEAM SYSTEM – ADMINISTRATION BUILDING.
M-148	NH-36260	AUXILIARY & HEATING STEAM SYSTEM – REACTOR & RADWASTE BUILDINGS
	NH-58635	RECOMBINER BUILDING
M-149	NH-36261	CHILLED WATER PIPING & MISCELLANEOUS REACTOR & RADWASTE BUILDING
M-150	NH-36262	AIRFLOW DIAGRAM DRYWELL
M-151	NH-36263	AIRFLOW DIAGRAM TURBINE BUILDING
M-152	NH-36264	OFFICE & CONTROL BUILDING HEATING WATER FLOW DIAGRAM
M-152-1	NH-36264-1	OFFICE & CONTROL BUILDING ADDITIONS HEATING WATER FLOW DIAGRAM
M-153	NH-36265	OFFICE & CONTROL BUILDING AIR FLOW DIAGRAM
	NH-170037	MAIN CONTROL ROOM CRV / EFT SYSTEM
	NH-170037-1	MAIN CONTROL ROOM BREATHING AIR SUPPLY SYSTEM
	NH-170021	NORMAL HVAC AND TSC EMERGENCY VENTILATION SYSTEM (EVS)
M-154	NH-36266	AIRFLOW DIAGRAM RADWASTE AREA
	NH-51142-1	OFF-GAS MODIFICATION HEATING & VENTILATING AIR FLOW DIAGRAM RECOMBINER & OFF-GAS STORAGE BLDG's
	NH-67588	STORAGE & COMPRESSOR BUILDING
	NX-9288-14	DILUTION FANS CONTROL SYSTEM
	NF-115830	EAST ELECTRICAL EQUIPMENT ROOM VENTILATION
M-155	NH-36267	PLANT AIRFLOW DIAGRAM SHEET 1
M-155	NH-36267-1	WIDE RANGE GAS MONITORING CH. A SHEET 3
M-155	NH-36267-2	WIDE RANGE GAS MONITORING CH. B SHEET 2
M-155	NH-36267-3	MAIN EXHAUST PLENUM ROOM SHEET 4
M-156	NH-36807	AIRFLOW DIAGRAM REACTOR BUILDING, LOWER PART
M-157	NH-36808	AIRFLOW DIAGRAM REACTOR BUILDING, UPPER PART
M-158	NH-46144	DISCHARGE CANAL SAMPLE STATION
M-185	NH-36908	REACTOR BUILDING SAMPLE SYSTEM FLOW DIAGRAM
M-186	NH-36909	RADWASTE BUILDING SAMPLE SYSTEM FLOW DIAGRAM
M-800	NH-36489	CIRCULATING WATER SYSTEM
M-800-1	NH-36489-2	CIRCULATING WATER SYSTEM
M-800-2	NH-36489-3	BIOCIDE MONITORING/CIRCULATING WATER SAMPLING SYSTEM
M-810	NH-36516	FIRE PROTECTION SYSTEM YARD AREAS
M-811	NH-36665	SERVICE WATER SYSTEM AND MAKE-UP INTAKE STRUCTURE
M-811	NH-36665-2	SERVICE WATER SYSTEM AND MAKE-UP INTAKE STRUCTURE
M-811	NH-36665-3	BIOCIDE INJECTION SYSTEM
M-812	NH-36666	SCREEN WASH, FIRE & CHLORINATION SYSTEM INTAKE STRUCTURE
M-813	NH-36667	MISCELLANEOUS PIPING CIRCULATING WATER SYSTEM
	NH-155483	WELLS AND DOMESTIC WATER
	NH-155483-1	WELLS AND DOMESTIC WATER
M-2500	NH-100320	HYDROGEN WATER CHEMISTRY HYDROGEN AND OXYGEN INJECTION SYSTEMS E84EW01

REVISIONS.

N AS-BUILT: REVISED TO REFLECT SUPERSEDED P&ID NF-96042 REPLACED WITH NH-96042-1 PER NDR: MO-96-001
DWN: RHH 4-3-96 CHK: PEB 4-3-96 MOD. FILMED: 4-16-96

P AS-BUILT: REVISED TO REFLECT THE NEW PREFIX DESIGNATION PER DRR: MO-96-082
DWN: RHH 5-23-96 CHK: JJG 5-23-96 MOD: FILMED: 6-5-96

Q AS-BUILT: REVISED DRAWING REF's TO REFLECT DRAWING SIZE FORMAT CHANGES PER DRR: MO-96-0149
DWN. RHH 8-8-96 CHK: KDT 8-28-96 MOD. FILMED 9-11-96

R AS-BUILT. REVISED TO REFLECT ADDED P&ID NH-36489-3 PER NDR: MO-96-040
DWN: RHH 1-8-97 CHK: RLJ 1-8-97 MOD: 92Q730 FILMED: 1-20-97

S AS-BUILT: REVISED TO REFLECT ADDED P&ID NH-36665-3 PER NDR: MO-97-0008
DWN: RHH 3-18-98 CHK: LET 3-20-98 MOD 95Q105 FILMED: 4-14-98

T AS-BUILT: REVISED TO REFLECT ADDED P&ID NH-170037-1 PER NDR: MO-99-0049
DWN. RHH 3-25-99 CHK: MGH 3-30-99 MOD 98Q145 FILMED: 5-5-99

U AS-BUILT: REVISED TO REFLECT ADDED P&ID's NH-36242-1 & NH-36242-2 PER NDR: MO-99-0039
DWN: RHH 4-1-99 CHK. AGV 4-28-99 MOD. FILMED: 6-9-99

REVIEWED BY Q-LIST EXTENSION COMMITTEE: 6-17-99 DATE
APPROVED BY: [signature] 6-22-99
QLEC CHAIRMAN / DATE

COLOR LEGEND: RED, BLUE, GREEN, YELLOW, ORANGE, BROWN, RESPECE

CONTROLLED
See Critical Drawing File for Current System Configuration

M-100-1
MONTI CAD DWG 'G'

NSP MONTICELLO NUCLEAR GENERATING PLANT UNIT 1

SIGNIFICANT NUMBER	8700			1	4500	1	
GROUP	1	2	3	4	5	CL	6

MONTICELLO NUCLEAR GENERATING PLANT
P & I D
INDEX

NORTHERN STATES POWER COMPANY
MINNEAPOLIS

SCALE: NONE | REV U
NH-36032-1

NH-36035-2

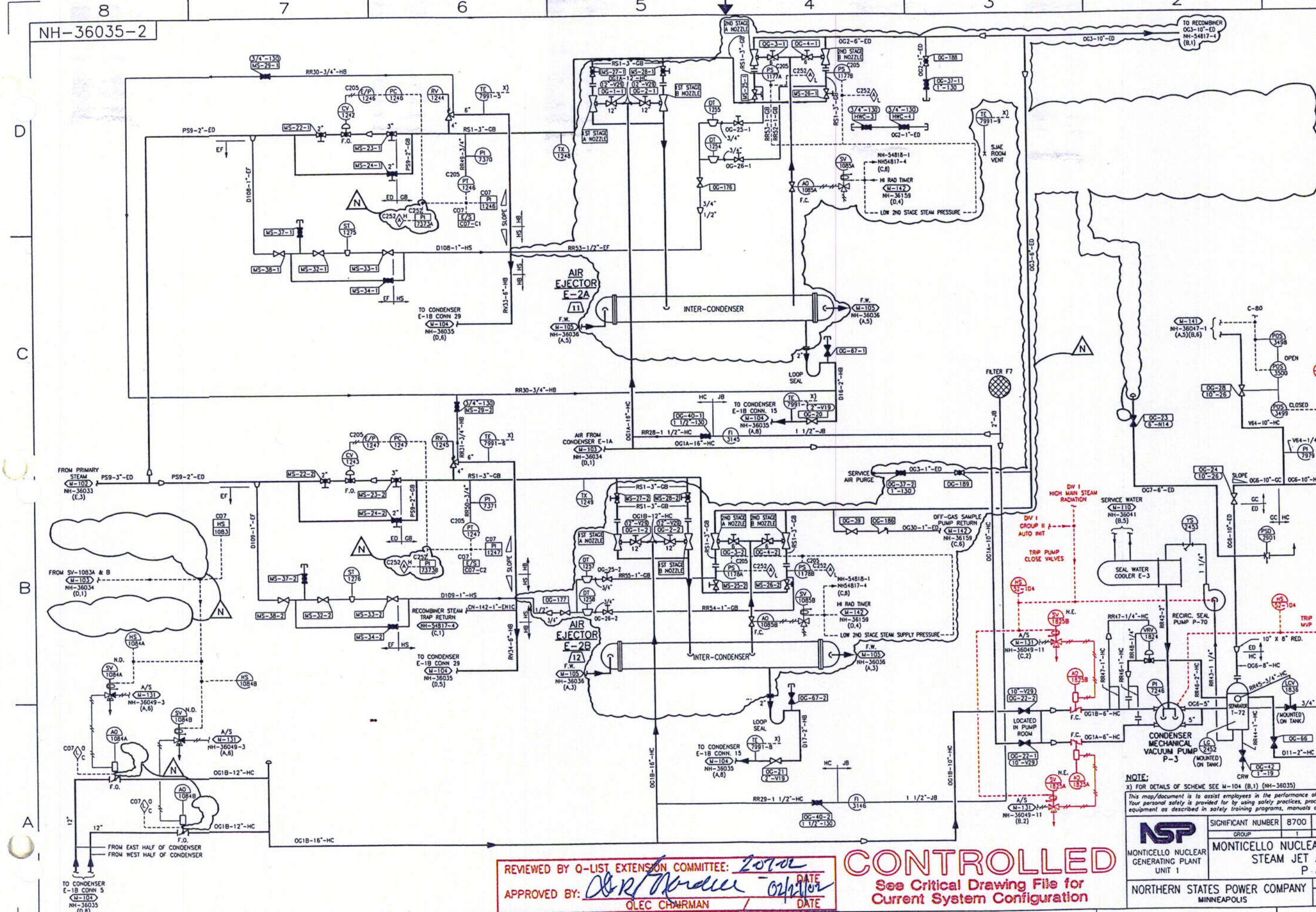

REVISIONS

L AS-BUILT: REVISED TO REFLECT AS FOUND CONDITION IN ACCORDANCE WITH SRI 92-025, SHOW VALVES IN NORMAL OPERATING POSITION PER DRR: MO-99-0118
DWN: RHH 7-7-99
CHK: KRS 7-8-99
MOD:
FILMED: 7-15-99

M AS-BUILT: REVISED TO REFLECT CONTROL ROOM DOSE REDUCTION PROJECT - RERATE PROJECT PER DRR: MO-99-0177
DWN: RHH 9-23-99
CHK: RLJ 9-23-99
MOD: 960015
FILMED: 11-01-99

N AS-BUILT: REVISED TO REFLECT THE FULL STEAM DILUTION RECOMBINER SYSTEM MOD PER DRR: MO-01-0152
DWN: JJP 1-17-02
CHK: SO 1-28-02
MOD: 99Q160
FILMED: 02.05.02 C

C01

NOTE:
x) FOR DETAILS OF SCHEME SEE M-104 (B,1) (NH-36035)

This map/document is to assist employees in the performance of their jobs. Your personal safety is provided for by using safety practices, procedures and equipment as described in safety training programs, manuals and SPAR's.

SIGNIFICANT NUMBER	8700		TURB	1	MECH 4420	1	CDR OGR	M-104-1
GROUP	1	2	3	4	5	CL	6	MONTI CAD DWG 'C'

NSP
MONTICELLO NUCLEAR GENERATING PLANT UNIT 1

MONTICELLO NUCLEAR GENERATING PLANT
STEAM JET AIR EJECTORS
P & ID

NORTHERN STATES POWER COMPANY
MINNEAPOLIS

SCALE: NONE | REV N
NH-36035-2

REVIEWED BY Q-LIST EXTENSION COMMITTEE: 2-7-02 DATE
APPROVED BY: [signature] 02/27/02
QLEC CHAIRMAN / DATE

CONTROLLED
See Critical Drawing File for Current System Configuration

NH-36039

COND. STORAGE TANKS HEAT EXCHANGER E-24

CONDENSATE STORAGE TANKS

11 T-1A NORTH TANK 230,000 GAL 9,400 GAL/FT

12 T-1B SOUTH TANK 230,000 GAL 9,400 GAL/FT

P-60A 11 / P-60B 12 CONDENSATE SERVICE PUMPS (800 GPM EA.) (FULL CAPACITY)

P-4 CONDENSATE SERVICE JOCKEY PUMP (75 GPM)

P-5A (100 GPM) 11 / P-5B (100 GPM) 12 DEMINERALIZED WATER TRANSFER PUMPS

DEMIN. WTR. TK. HEAT EXCH. E-23

REVISIONS

BK AS-BUILT: REVISED TO SHOW DM-144 & DM-145 IN A CLOSED POSITION
PER DRR: MO-00-0072
DWN: JJG 4-18-00
CHK: BAK 4-18-00
MOD:
FILMED: 4-21-00

BL AS BUILT: REVISED CONTAINMENT PENETRATION TYPES AND NUMBERS AS INDICATED PER DRR: MO-01-0184
DWN: JJP 5-6-02
CHK: DRN 5-21-02
MOD:
FILMED: 6-5-02

C02

COLOR LEGEND: RED, BLUE, GREEN, YELLOW, ORANGE, BROWN, PURPLE

CONTROLLED
See Critical Drawing File for Current System Configuration

REVIEWED BY Q-LIST EXTENSION COMMITTEE: 6-17-02 DATE
APPROVED BY: QLEC CHAIRMAN 6-25-02 DATE

This map/document is to assist employees in the performance of their jobs. Your personal safety is provided for by using safety practices, procedures and equipment as described in safety training programs, manuals and SPAR's.

M-108

MONTI	CAD	DWG	AX
1	4420	1	CST

NSP MONTICELLO NUCLEAR GENERATING PLANT UNIT 1

SIGNIFICANT NUMBER	8700		RW RX TURB	1	4420	1	CST
GROUP	1	2	3	4	5	CL	6

MONTICELLO NUCLEAR GENERATING PLANT P&ID CONDENSATE & DEMINERALIZED WATER STORAGE SYSTEMS

NORTHERN STATES POWER COMPANY MINNEAPOLIS

SCALE: NONE REV BL

NH-36039

NH-36041

REVISIONS

BN AS-BUILT: REVISED TO CORRECT INSTRUMENT RACK NUMBERS PER DRR: MO-01-0136
DWN: JJG 10-18-01
CHK: DJP 10-27-01
MOD:
FILMED: 11-1-01

BP AS-BUILT: REVISED LINE SIZE ON SERVICE WATER LINE AS INDICATED PER DRR: MO-02-0056
DWN: JJG 3-20-02
CHK: DRN 3-21-02
MOD:
FILMED: 03-28-02

CONTROLLED
See Critical Drawing File for Current System Configuration

REVIEWED BY Q-LIST EXTENSION COMMITTEE: 6-11-02 DATE
APPROVED BY: QLEC CHAIRMAN / DATE

SERVICE WATER PUMPS (BY WO 6453)

TURBINE LUBE OIL COOLERS

REACTOR FEED PUMPS

REACTOR BLDG C.W. HEAT EXCHANGERS

COLOR LEGEND: RED, BLUE, GREEN, YELLOW, ORANGE, BROWN, PURPLE

NSP MONTICELLO NUCLEAR GENERATING PLANT UNIT 1

SIGNIFICANT NUMBER 8700

MONTICELLO NUCLEAR GENERATING PLANT
SERVICE WATER SYSTEM
P & ID SHT 1 OF 2

NORTHERN STATES POWER COMPANY MINNEAPOLIS

SCALE: NONE REV BP

NH-36041

M-110

C03

This map/document is to employees in the performance of their jobs. Your personal safety is provided for by using safety practices, procedures and equipment as described in safety, training programs, manuals and SPAGS.

NH-36042-2

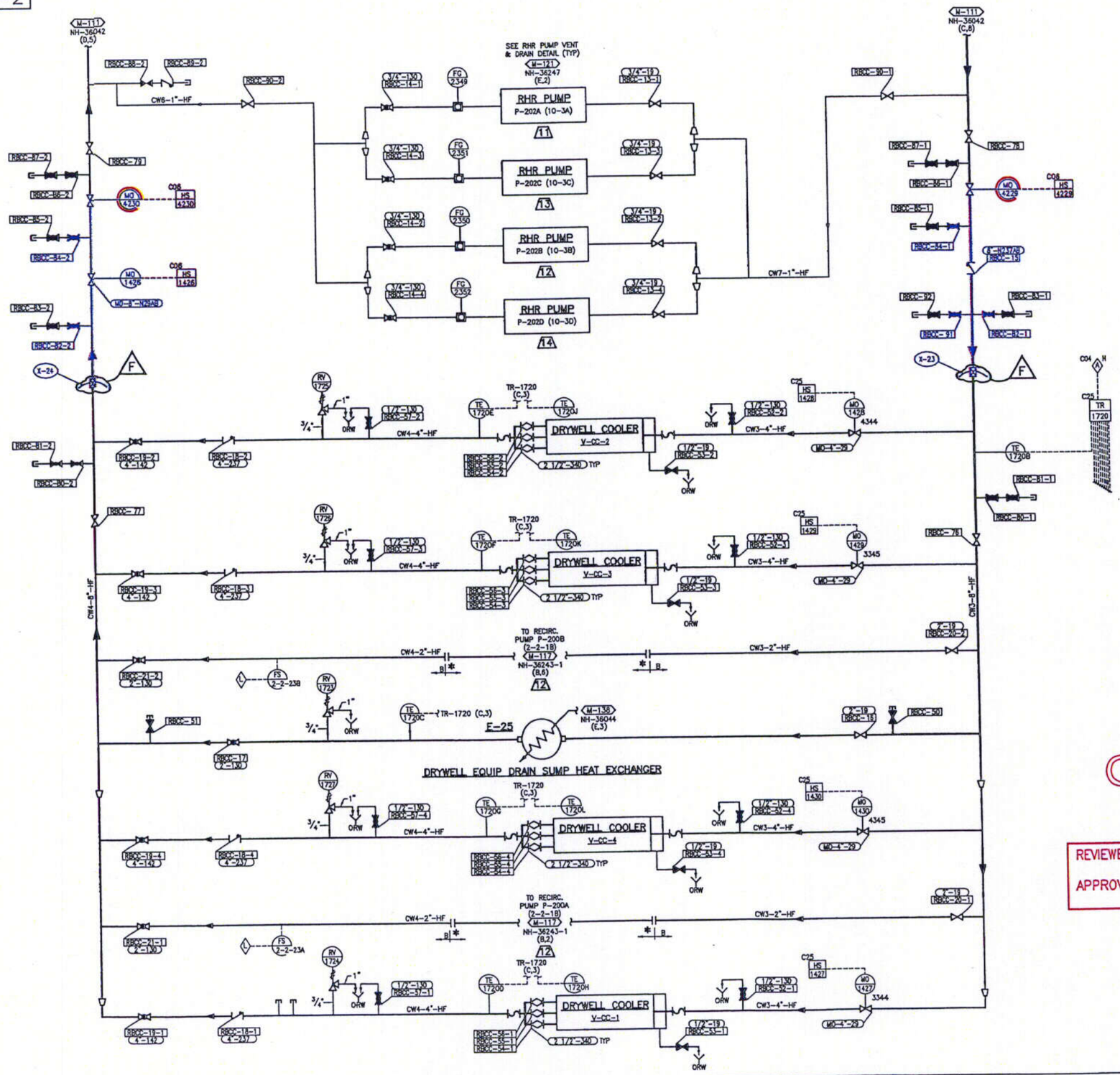

REVISIONS

A AS-BUILT: INCORPORATE INTO DWG SYSTEM PER NDR: MO-710
DWN: RW 2-12-90
CHK: RDJ
MOD: 89Z003-A
FILMED: 4-5-90

B AS-BUILT: REVISED AS SHOWN PER DRR: MO-92-108
DWN: CEP/WRM 8-12-92
CHK: AMY SENGER
MOD:
FILMED: 8-19-92

C AS-BUILT: REVISED TO REFLECT REMOVAL OF LOCKED OPEN AND LOCKED CLOSED DESIGNATION IN ACCORDANCE WITH SRI 96-003 PER DRR: MO-96-053
DWN: RHH 4-4-96
CHK: PEB 4-13-96
MOD:
FILMED: 4-22-96

D AS-BUILT: REVISED TO REFLECT AS FOUND CONDITION IN ACCORDANCE WITH SRI 92-025 PER DRR: MO-96-0193
DWN: RHH 9-23-96
CHK: DJP 9-24-96
MOD:
FILMED: 10-1-96

E AS-BUILT: REVISED TO REFLECT AS FOUND CONDITION IN ACCORDANCE WITH SRI 92-025 PER DRR: MO-97-0092
DWN: RHH 6-10-97
CHK: MRE 6-11-97
MOD:
FILMED: 7-2-97

F AS BUILT: REVISED CONTAINMENT PENETRATION TYPES AND NUMBERS AS INDICATED PER DRR: MO-01-0184
DWN: JJP 5-7-02
CHK: DRN 5-21-02
MOD:
FILMED: 6-5-02

CONTROLLED
See Critical Drawing File for Current System Configuration

REVIEWED BY Q-LIST EXTENSION COMMITTEE: 6-20-02 DATE
APPROVED BY: QLEC CHAIRMAN 6-25-02 DATE

C04

COLOR LEGEND: RED, BLUE, GREEN, YELLOW, ORANGE, BROWN, PURPLE

This map/document is to assist employees in the performance of their jobs. Your personal safety is provided for by using safety practices, procedures and equipment as described in safety training programs, manuals and SPAR's.

M-111-1
MONTI CAD DWG 'A'

SIGNIFICANT NUMBER	8700		RX	1	4420	1	RBC
GROUP	1	2	3	4	5	CL	6

NSP
MONTICELLO NUCLEAR GENERATING PLANT UNIT 1

MONTICELLO NUCLEAR GENERATING PLANT
REACTOR BLDG. COOLING WATER SYSTEM P&ID

NORTHERN STATES POWER COMPANY
MINNEAPOLIS

SCALE: NONE
REV F
NH-36042-2

NH-36664

This map/document is to assist employees in the performance of their jobs. Your personal safety is provided for by using safety practices, procedures and equipment as described in safety training programs, manuals and SPAR's.

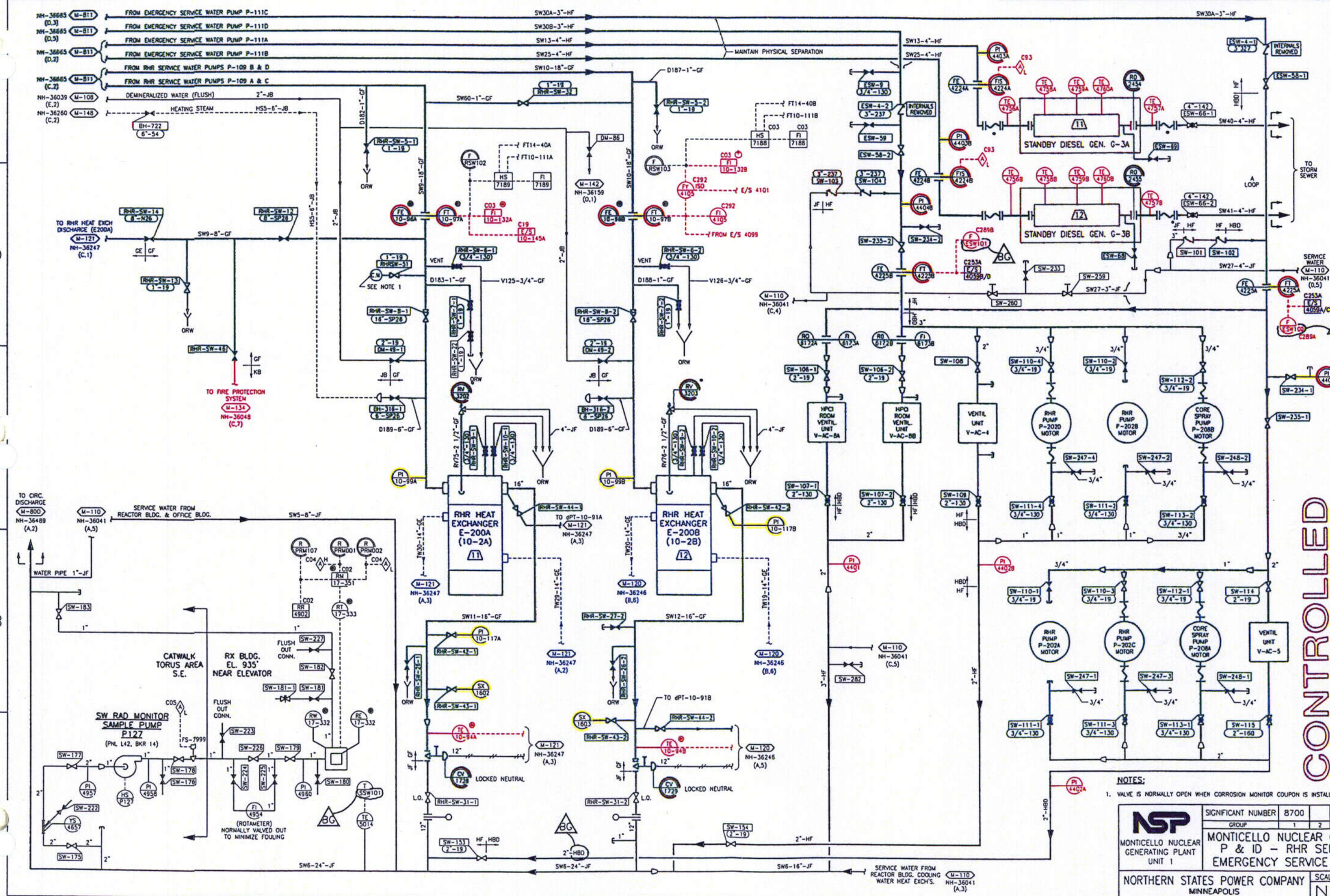

NOTES:

1. VALVE IS NORMALLY OPEN WHEN CORROSION MONITOR COUPON IS INSTALLED.

REVISIONS

BF AS-BUILT: REPLACED PORTIONS OF THE REACTOR BUILDING ESW PIPING PER DRR: MO-00-0104 DWN: JJP 4-10-00 CHK: MH 4-13-00 MOD: 980045, 990175 FILMED: 4-21-00

BG AS-BUILT: REVISED TO CORRECT PIPE CLASS & COMP. POINT I.D.'s PER DRR: MO-02-0037 DWN: JJG 2-11-02 CHK: RJF 2-12-02 MOD: FILMED: 02-19-02

C05

REVIEWED BY Q-LIST EXTENSION COMMITTEE: 6-17-02 DATE
APPROVED BY: QLEC CHAIRMAN 6-25-02 DATE

CONTROLLED
See Critical Drawing File for Current System Configuration

COLOR LEGEND: RED, BLUE, GREEN, YELLOW, ORANGE, BROWN, PURPLE

M-112

MONTI	CAD	DWG	AE
1	4420	1	ESW RSW

NSP — MONTICELLO NUCLEAR GENERATING PLANT UNIT 1

SIGNIFICANT NUMBER	8700		RX TORUS	1	4420	1	ESW RSW
GROUP	1	2	3	4	5	CL	6

MONTICELLO NUCLEAR GENERATING PLANT
P & ID – RHR SERVICE WATER & EMERGENCY SERVICE WATER SYSTEMS

NORTHERN STATES POWER COMPANY MINNEAPOLIS

SCALE: NONE | REV BG

NH-36664

NH-85509

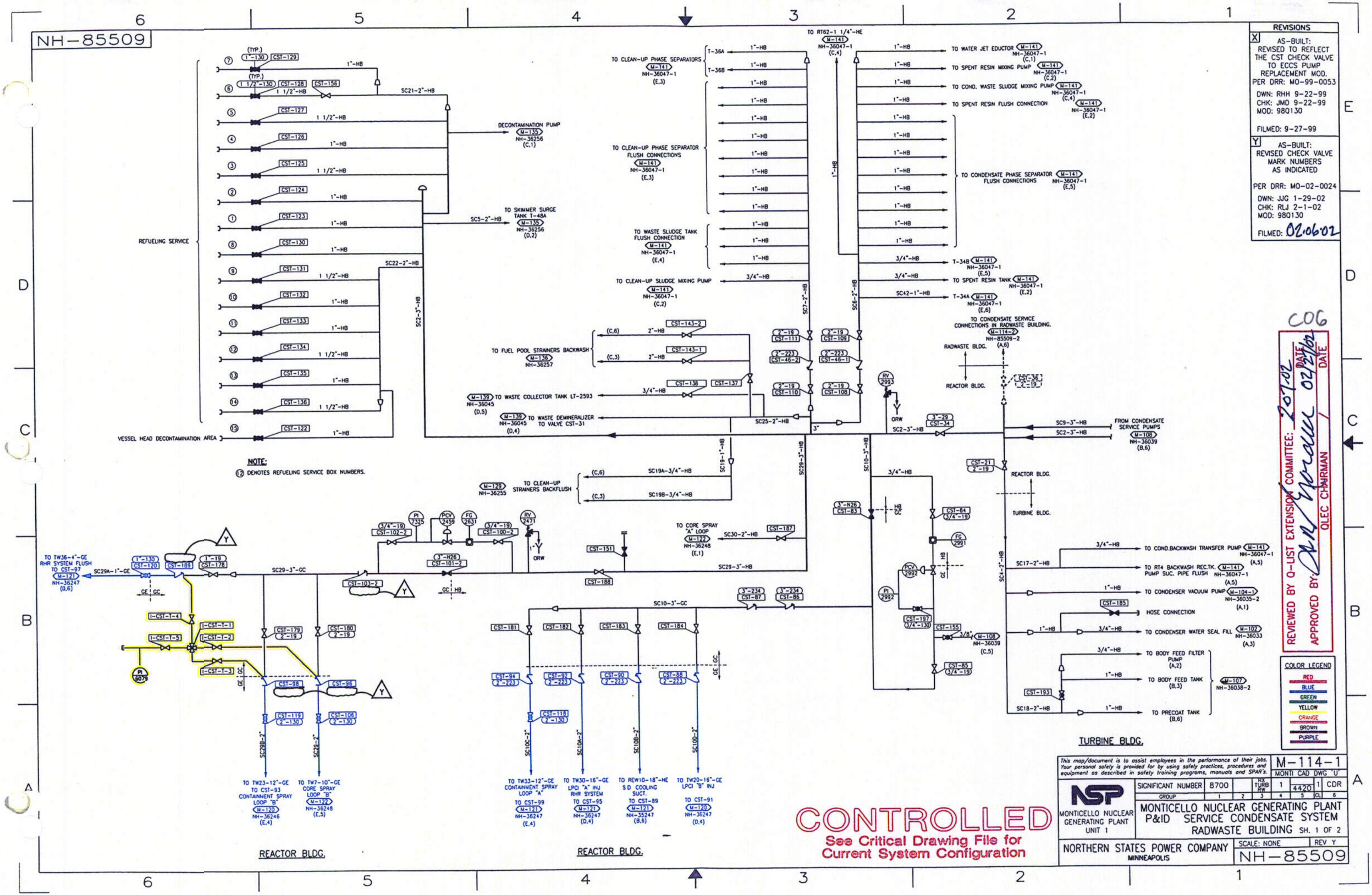

REVISIONS

X AS-BUILT: REVISED TO REFLECT THE CST CHECK VALVE TO ECCS PUMP REPLACEMENT MOD. PER DRR: MO-99-0053
DWN: RHH 9-22-99
CHK: JMD 9-22-99
MOD: 980130
FILMED: 9-27-99

Y AS-BUILT: REVISED CHECK VALVE MARK NUMBERS AS INDICATED
PER DRR: MO-02-0024
DWN: JJG 1-29-02
CHK: RLJ 2-1-02
MOD: 980130
FILMED: 02.06.02

COG
REVIEWED BY Q-LIST EXTENSION COMMITTEE: 2-07-02 DATE
APPROVED BY: OLEC CHAIRMAN 02/27/02 DATE

COLOR LEGEND
RED
BLUE
GREEN
YELLOW
ORANGE
BROWN
PURPLE

CONTROLLED
See Critical Drawing File for Current System Configuration

This map/document is to assist employees in the performance of their jobs. Your personal safety is provided for by using safety practices, procedures and equipment as described in safety training programs, manuals and SPAR's.

M-114-1
MONTI CAD DWG 'U'

SIGNIFICANT NUMBER	8700		MX TURB BW	1	4420	1 CDR
GROUP	1	2	3	4	5	CL 6

NSP MONTICELLO NUCLEAR GENERATING PLANT UNIT 1

MONTICELLO NUCLEAR GENERATING PLANT
P&ID SERVICE CONDENSATE SYSTEM
RADWASTE BUILDING SH. 1 OF 2

NORTHERN STATES POWER COMPANY
MINNEAPOLIS

SCALE: NONE REV Y
NH-85509

NH-36241

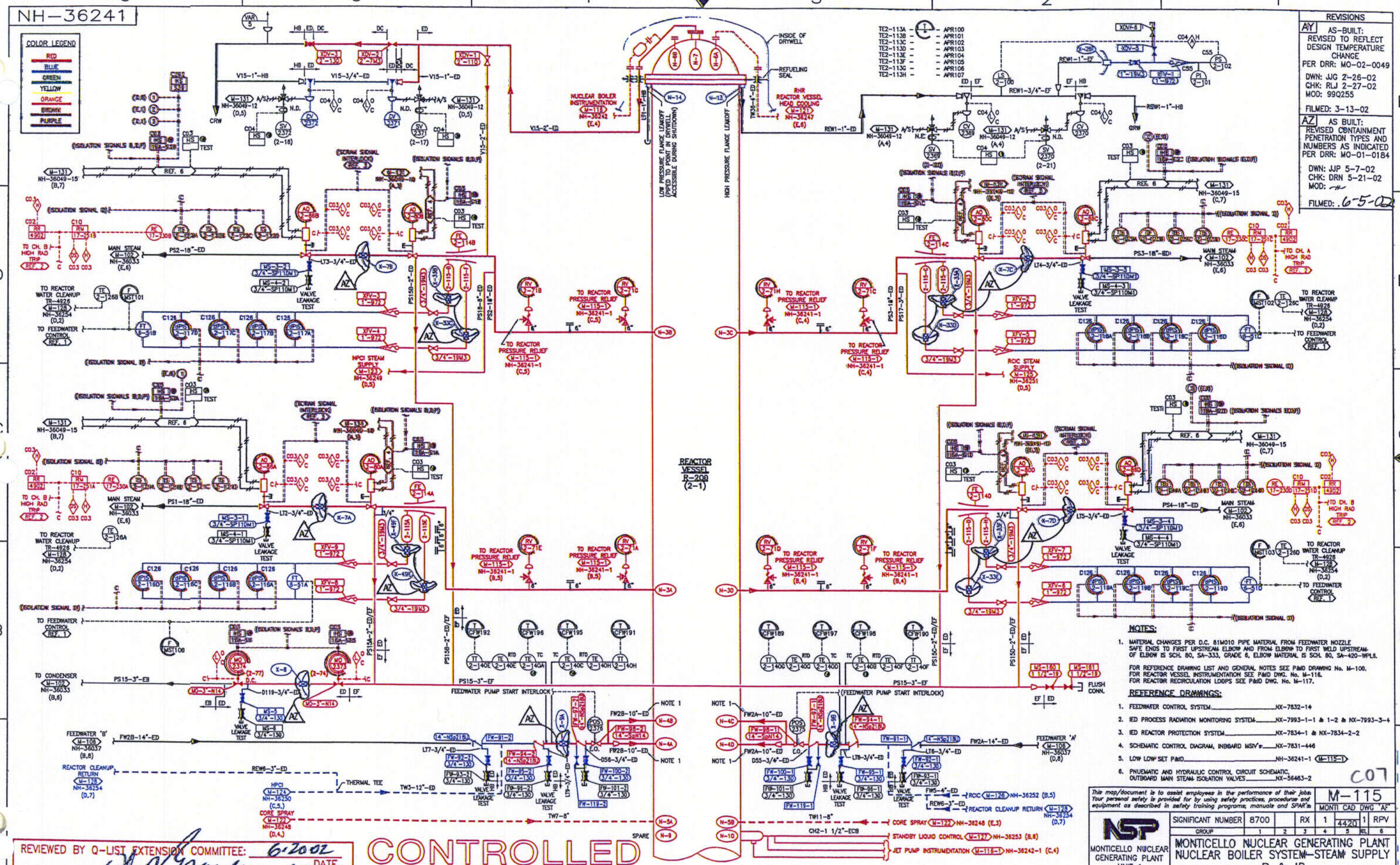

REVISIONS

AY AS-BUILT: REVISED TO REFLECT DESIGN TEMPERATURE CHANGE PER DRR: MO-02-0049
DWN: JJG 2-26-02
CHK: RLJ 2-27-02
MOD: 99Q255
FILMED: 3-13-02

AZ AS BUILT: REVISED CONTAINMENT PENETRATION TYPES AND NUMBERS AS INDICATED PER DRR: MO-01-0184
DWN: JJP 5-7-02
CHK: DRN 5-21-02
MOD: —
FILMED: 6-5-02

NOTES:

1. MATERIAL CHANGES PER D.C. 81M010 PIPE MATERIAL FROM FEEDWATER NOZZLE SAFE ENDS TO FIRST UPSTREAM ELBOW AND FROM ELBOW TO FIRST WELD UPSTREAM OF ELBOW IS SCH. 80, SA-333, GRADE 6, ELBOW MATERIAL IS SCH. 80, SA-420-WPL6.

FOR REFERENCE DRAWING LIST AND GENERAL NOTES SEE P&ID DRAWING No. M-100.
FOR REACTOR VESSEL INSTRUMENTATION SEE P&ID DWG. No. M-116.
FOR REACTOR RECIRCULATION LOOPS SEE P&ID DWG. No. M-117.

REFERENCE DRAWINGS:

1. FEEDWATER CONTROL SYSTEM NX-7832-14
2. IED PROCESS RADIATION MONITORING SYSTEM ..... NX-7993-1-1 & 1-2 & NX-7993-3-4
3. IED REACTOR PROTECTION SYSTEM ..... NX-7834-1 & NX-7834-2-2
4. SCHEMATIC CONTROL DIAGRAM, INBOARD MSIV's NX-7831-446
5. LOW LOW SET P&ID NH-36241-1 (M-115-1)
6. PNEUMATIC AND HYDRAULIC CONTROL CIRCUIT SCHEMATIC, OUTBOARD MAIN STEAM ISOLATION VALVES NX-56463-2

C07

This map/document is to assist employees in the performance of their jobs. Your personal safety is provided for by using safety practices, procedures and equipment as described in safety training programs, manuals and SPAR's.

M-115

MONTI	CAD	DWG	"AF"

SIGNIFICANT NUMBER	8700		RX	1	4420	1	RPV
GROUP	1	2	3	4	5	6L	6

NSP
MONTICELLO NUCLEAR GENERATING PLANT UNIT 1

MONTICELLO NUCLEAR GENERATING PLANT
NUCLEAR BOILER SYSTEM—STEAM SUPPLY
P & ID

NORTHERN STATES POWER COMPANY
MINNEAPOLIS

SCALE: NONE | REV AZ
NH-36241

REVIEWED BY Q-LIST EXTENSION COMMITTEE: 6-20-02 DATE
APPROVED BY: QLEC CHAIRMAN / DATE 6/20/02

CONTROLLED
See Critical Drawing File for Current System Configuration

NH-36241-1

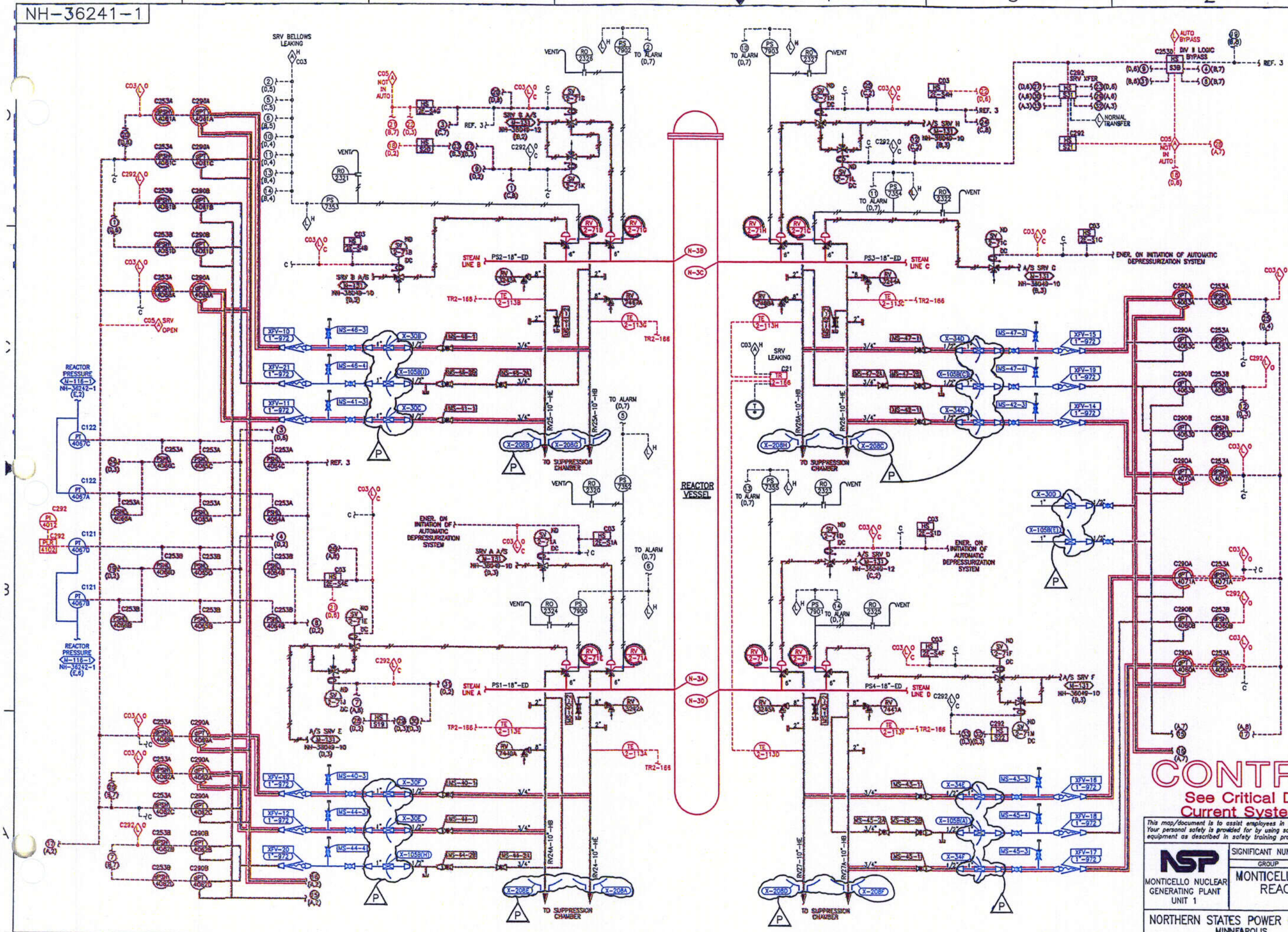

REVISIONS

L — AS-BUILT: REVISED TO REFLECT THE ADDITION OF VENT VALVE OR CAPPED CONNECTION TO EACH SRV DISCHARGE LINE. CHANGED HANDSWITCH NUMBERS FOR SRV's & CORRECTED VALVE TAG TEXT FORMAT TO REFLECT CHAMPS DATA INPUT FORMAT PER DRR: MO-96-0218
DWN: RHH 10-31-96
CHK: DJP 10-31-96
MOD: 79M078
FILMED: 11-14-96

M — AS BUILT: REVISED TO REFLECT CHANGED REF. COORD's PER DRR: MO-99-0040
DWN: RHH 4-12-99
CHK: AGV 4-29-99
MOD: ~~~
FILMED: 6-9-99

N — AS-BUILT: REVISED TO REFLECT REMOVE REFERENCES TO THE SRV BELLOWS LEAK DETECTION TEST EQUIPMENT PER DRR: MO-01-0161
DWN: JJP 11-14-01
CHK: RG 11-27-01
MOD: 01Q050
FILMED: 11-30-01

P — AS BUILT: REVISED CONTAINMENT PENETRATION TYPES AND NUMBERS AS INDICATED PER DRR: MO-01-0184
DWN: JJP 5-7-02
CHK: DRN 5-21-02
MOD: ~~~
FILMED: 6-5-02

REVIEWED BY Q-LIST EXTENSION COMMITTEE: 6-20-02 DATE
APPROVED BY: 6-25-02 DATE
QLEC CHAIRMAN

COLOR LEGEND
RED
BLUE
GREEN
YELLOW
ORANGE
BROWN
PURPLE

TE2-113A - APR100
TE2-113B - APR101
TE2-113C - APR102
TE2-113D - APR103
TE2-113E - APR104
TE2-113F - APR105
TE2-113G - APR106
TE2-113H - APR107

REFERENCES:

1. DEPRESSURIZATION CONTROL DESIGN SPECIFICATION, NSP-48-034.
2. DEPRESSURIZATION CONTROL SYSTEM DIVISION I & II ELEMENTARY DIAGRAMS NF-95915 AND NF-95916.
3. REACTOR PROTECTION SYSTEM ELEMENTARY DIAGRAM NX-7834-67-13.
4. NUCLEAR BOILER SYSTEM VESSEL INSTRUMENTATION P&ID NH-36242.
5. DEPRESSURIZATION CONTROL SYSTEM LOGIC DIAGRAM NF-95918.

CONTROLLED
See Critical Drawing File for Current System Configuration
C08

This map/document is to assist employees in the performance of their jobs. Your personal safety is provided for by using safety practices, procedures and equipment as described in safety training programs, manuals and SPAR's.

M-115-1

MONTI	CAD	DWG	'E'
— 4420	1	APR	

SIGNIFICANT NUMBER	8700	--	RX	1	— 4420	1	APR
GROUP	1	2	3	4	5	CL	6

NSP
MONTICELLO NUCLEAR GENERATING PLANT UNIT 1

MONTICELLO NUCLEAR GENERATING PLANT
REACTOR PRESSURE RELIEF
P & ID

NORTHERN STATES POWER COMPANY
MINNEAPOLIS

SCALE: NONE
REV P
NH-36241-1

NH-36242

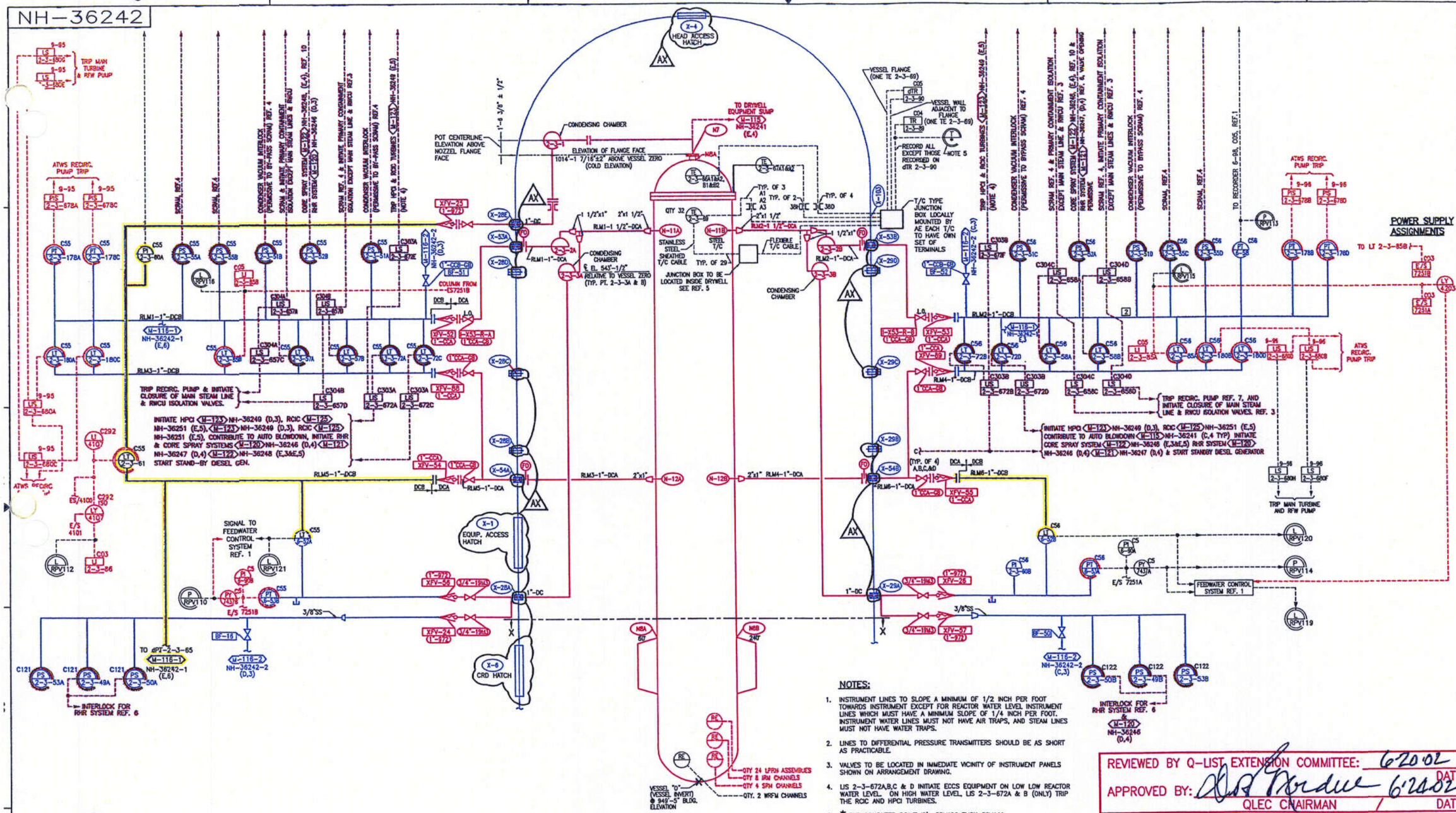

NOTES:

1. INSTRUMENT LINES TO SLOPE A MINIMUM OF 1/2 INCH PER FOOT TOWARDS INSTRUMENT EXCEPT FOR REACTOR WATER LEVEL INSTRUMENT LINES WHICH MUST HAVE A MINIMUM SLOPE OF 1/4 INCH PER FOOT. INSTRUMENT WATER LINES MUST NOT HAVE AIR TRAPS, AND STEAM LINES MUST NOT HAVE WATER TRAPS.
2. LINES TO DIFFERENTIAL PRESSURE TRANSMITTERS SHOULD BE AS SHORT AS PRACTICABLE.
3. VALVES TO BE LOCATED IN IMMEDIATE VICINITY OF INSTRUMENT PANELS SHOWN ON ARRANGEMENT DRAWING.
4. LIS 2-3-672A,B,C & D INITIATE ECCS EQUIPMENT ON LOW LOW REACTOR WATER LEVEL. ON HIGH WATER LEVEL, LIS 2-3-672A & B (ONLY) TRIP THE RCIC AND HPCI TURBINES.
5. * FOR COMPUTER POINT ID's RPV100 THRU RPV109

REFERENCE DRAWINGS:

1. IED FEEDWATER CONTROL SYSTEM ..... NX-7832-3-1 THRU 6
2. IED NEUTRON MONITORING SYSTEM ..... NX-7830-2-1 & 2, NX-7830-4-1 THRU 4
3. FDC NUCLEAR BOILER MISC SYSTEM ..... NX-7831-58-1 & 2
4. IED REACTOR PROTECTION SYSTEM ..... NX-7834-1 & NX-7834-2-2
5. R.P.V. THERMOCOUPLE LOCATIONS & EXTENSION LEAD ROUTING NF-36790
6. FCD RHR SYSTEM ..... NX-7905-6-1 THRU 3
7. FCD RECIRC. FLOW CONTROL SYSTEM VENDOR DWG. 729E203 IN TECH. MANUAL NX-7831-411
8. FCD HPCI SYSTEM ..... NX-8292-15-1 THRU 3
9. FCD RCIC SYSTEM ..... NX-7822-60-1 THRU 3
10. FCD CORE SPRAY SYSTEM NX-7833-3
11. ELEMENTARY DIAGRAM R.V. TEMP. MONITOR NX-7831-178

REVISIONS

AV AS-BUILT: REVISED TO REFLECT RWCU SYSTEM IMPROVEMENTS DRR: MO-01-0162 DWN: JJP 11-15-01 CHK: RLJ 11-16-01 MOD: 000305 FILMED: 12-20-01

AW AS-BUILT: REVISED TO REMOVE WORDS "MAX PRESSURE INDICATOR" FROM PI-2-3-60A PER DRR: MO-02-0046 DWN: JJG 2-22-02 CHK: DJP 2-22-02 MOD: — FILMED:

AX AS BUILT: REVISED CONTAINMENT PENETRATION TYPES AND NUMBERS AS INDICATED PER DRR: MO-01-0184 DWN: JJP 5-7-02 CHK: DRN 5-21-02 MOD: — FILMED: 6-5-02

C09

REVIEWED BY Q-LIST EXTENSION COMMITTEE: 6-20-02 DATE

APPROVED BY: QLEC CHAIRMAN 6-20-02 DATE

COLOR LEGEND: RED, BLUE, GREEN, YELLOW, ORANGE, BROWN, PURPLE

CONTROLLED
See Critical Drawing File for Current System Configuration

This map/document is to assist employees in the performance of their jobs. Your personal safety is provided for by using safety practices, procedures and equipment as described in safety training programs, manuals and SPAR's.

NSP — MONTICELLO NUCLEAR GENERATING PLANT UNIT 1

SIGNIFICANT NUMBER	8700		RX	1	4400	1	
GROUP	1	2	3	4	5	CL	6

M-116 (MONTI CAD DWG 'AG')

MONTICELLO NUCLEAR GENERATING PLANT
P & ID VESSEL INSTRUMENTATION
NUCLEAR BOILER SYSTEM

NORTHERN STATES POWER COMPANY
MINNEAPOLIS

SCALE: NONE — REV AX — NH-36242

NH-36242-1

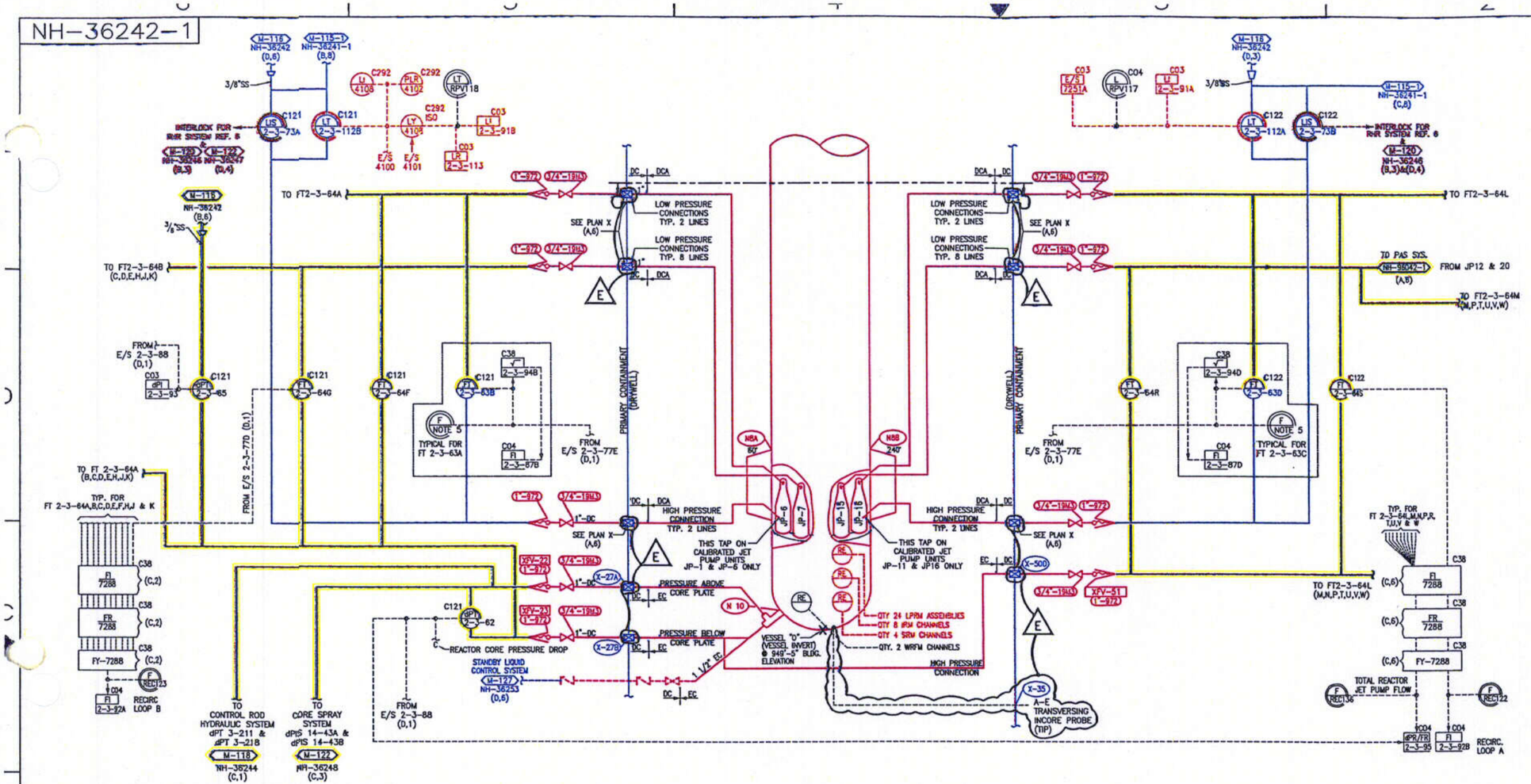

POWER SUPPLY ASSIGNMENTS

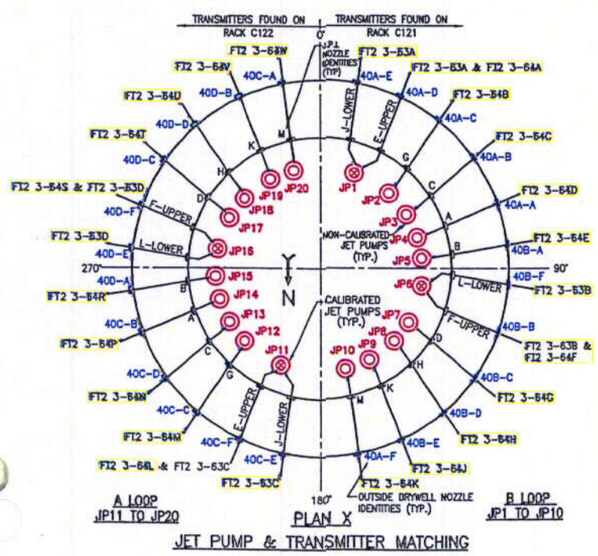

JET PUMP & TRANSMITTER MATCHING

(SEE NOTE 6 FOR TABLE EXPLANATION)

JP INST. LINE PENETRATION TO EXCESS FLOW CHECK VALVE (XFV) TABLE

PEN.	XFV	PEN.	XFV
X-40A-A	XFV-27	X-40C-D	XFV-42
X-40A-B	XFV-28	X-40C-E	XFV-43
X-40A-C	XFV-29	X-40C-F	XFV-44
X-40A-D	XFV-30	X-40D-A	XFV-45
X-40A-E	XFV-31	X-40D-B	XFV-46
X-40A-F	XFV-32	X-40D-C	XFV-47
X-40B-A	XFV-33	X-40D-D	XFV-48
X-40B-B	XFV-34	X-40D-E	XFV-49
X-40B-C	XFV-35	X-40D-F	XFV-50
X-40B-D	XFV-36		
X-40B-E	XFV-37		
X-40B-F	XFV-38		
X-40C-A	XFV-39		
X-40C-B	XFV-40		
X-40C-C	XFV-41		

NOTES:

1. INSTRUMENT LINES TO SLOPE A MINIMUM OF 1/2 INCH PER FOOT TOWARDS INSTRUMENT EXCEPT FOR REACTOR WATER LEVEL INSTRUMENT LINES WHICH MUST HAVE A MINIMUM SLOPE OF 1/4 INCH PER FOOT. INSTRUMENT WATER LINES MUST NOT HAVE AIR TRAPS, AND STEAM LINES MUST NOT HAVE WATER TRAPS.
2. LINES TO DIFFERENTIAL PRESSURE TRANSMITTERS SHOULD BE AS SHORT AS PRACTICABLE.
3. VALVES TO BE LOCATED IN IMMEDIATE VICINITY OF INSTRUMENT PANELS SHOWN ON ARRANGEMENT DRAWING.
4. ALL INSTRUMENT LINES FROM JET PUMPS 1 TO 10 EXIT THRU PENETRATIONS N8A & X-40AB, LINES 11 TO 20 EXIT THRU PENETRATIONS N8B & X-40CB. SEE PLAN X.
5. FT 2-3-63A -- COMPUTER POINT REC142
   FT 2-3-63B -- COMPUTER POINT REC143
   FT 2-3-63C -- COMPUTER POINT REC144
   FT 2-3-63D -- COMPUTER POINT REC145
6. X PREFIX IS NOT SHOWN FOR PENETRATIONS ON PLAN X

REFERENCE DRAWINGS:

1. IED FEEDWATER CONTROL SYSTEM ..... NX-7832-3-1 THRU 8
2. IED NEUTRON MONITORING SYSTEM ..... NX-7830-2-1 & 2, NX-7830-4-1 THRU 4
3. FDC NUCLEAR BOILER MISC SYSTEM ..... NX-7831-58-1 & 2
4. IED REACTOR PROTECTION SYSTEM ..... NX-7834-1 & NX-7834-2-2
5. R.P.V. THERMOCOUPLE LOCATIONS & EXTENSION LEAD ROUTING NF-36790
6. FCD RHR SYSTEM ..... NX-7905-6-1 THRU 3
7. FCD RECIRC. FLOW CONTROL SYSTEM VENDOR DWG. 729E203 IN TECH. MANUAL NX-7831-411
8. FCD HPCI SYSTEM ..... NX-8292-15-1 THRU 3
9. FCD ROC SYSTEM ..... NX-7822-60-1 THRU 3
10. FCD CORE SPRAY SYSTEM NX-7833-3
11. ELEMENTARY DIAGRAM R.V. TEMP. MONITOR NX-7831-178

REVIEWED BY Q-LIST EXTENSION COMMITTEE: 6-20-02 DATE
APPROVED BY: [signature] 6-24-02
QLEC CHAIRMAN / DATE

CONTROLLED
See Critical Drawing File for Current System Configuration

REVISIONS

C — AS-BUILT: REVISED TO REFLECT INSTALL TIE-IN FOR THE FUEL ZONE LEVEL INDICATION.
PER DRR: MO-01-0046
DWN: JJP 3-27-01
CHK: PEB 3-31-01
MOD: 01Q075
FILMED: 4-5-01

D — AS-BUILT: REVISED TO INCORPORATE AS-FOUND CONDITIONS PER DRR: MO-01-0135
DWN: JJG/JJP 10-8-01
CHK: JMD 10-23-01
MOD: —
FILMED: 10-31-01

E — AS BUILT: REVISED CONTAINMENT PENETRATION TYPES AND NUMBERS AS INDICATED PER DRR: MO-01-0184
DWN: JJP 5-21-02
CHK: DRN 5-21-02
MOD: —
FILMED: 6-5-02

C10

COLOR LEGEND: RED, BLUE, GREEN, YELLOW, ORANGE, BROWN, PURPLE

This map/document is to assist employees in the performance of their jobs. Your personal safety is provided for by using safety practices, procedures and equipment as described in safety training programs, manuals and SPAR's.

M-116-1

MONTI CAD DWG 'A'

SIGNIFICANT NUMBER	8700	--	RX	1	-- 4420	1	-
GROUP	1	2	3	4	5	CL	6

NSP — MONTICELLO NUCLEAR GENERATING PLANT UNIT 1

MONTICELLO NUCLEAR GENERATING PLANT
P & ID JET PUMP INSTRUMENTATION
NUCLEAR BOILER SYSTEM

NORTHERN STATES POWER COMPANY
MINNEAPOLIS

SCALE: NONE REV E

NH-36242-1

NH-36242-2

REVISIONS	
A	AS-BUILT: INCORPORATE THIS DRAWING INTO THE NSP DRAWING SYSTEM PER NDR MO-99-0039 DWN: JJG 5-6-99 CHK: AGV 4-28-99 MOD: FILMED: 6-9-99

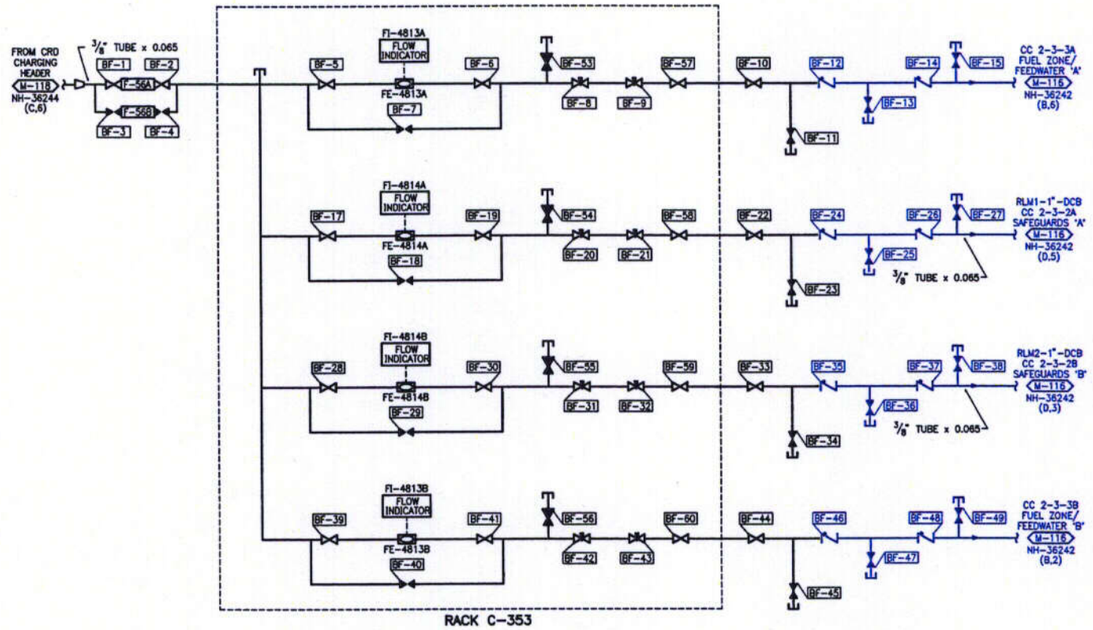

NOTES:

1. INSTRUMENT LINES TO SLOPE A MINIMUM OF 1/2 INCH PER FOOT TOWARDS INSTRUMENT EXCEPT FOR REACTOR WATER LEVEL INSTRUMENT LINES WHICH MUST HAVE A MINIMUM SLOPE OF 1/4 INCH PER FOOT. INSTRUMENT WATER LINES MUST NOT HAVE AIR TRAPS, AND STEAM LINES MUST NOT HAVE WATER TRAPS.
2. LINES TO DIFFERENTIAL PRESSURE TRANSMITTERS SHOULD BE AS SHORT AS PRACTICABLE.
3. VALVES TO BE LOCATED IN IMMEDIATE VICINITY OF INSTRUMENT PANELS SHOWN ON ARRANGEMENT DRAWING.

REFERENCE DRAWINGS:

1. IED FEEDWATER CONTROL SYSTEM ..... NX-7832-3-1 THRU 6
2. IED NEUTRON MONITORING SYSTEM ..... NX-7830-2-1 & 2, NX-7830-4-1 THRU 4
3. FDC NUCLEAR BOILER MISC SYSTEM ..... NX-7831-58-1 & 2
4. IED REACTOR PROTECTION SYSTEM ..... NX-7834-1 & NX-7834-2-2
5. R.P.V. THERMOCOUPLE LOCATIONS & EXTENSION LEAD ROUTING NF-36790
6. FCD RHR SYSTEM ..... NX-7905-6-1 THRU 3
7. FCD RECIRC. FLOW CONTROL SYSTEM VENDOR DWG. 729E203 IN TECH. MANUAL NX-7831-411
8. FCD HPCI SYSTEM ..... NX-8292-15-1 THRU 3
9. FCD RCIC SYSTEM ..... NX-7822-60-1 THRU 3
10. FCD CORE SPRAY SYSTEM NX-7833-3
11. ELEMENTARY DIAGRAM R.V. TEMP. MONITOR NX-7831-178

C11

REVIEWED BY Q-LIST EXTENSION COMMITTEE: 6-28-99 DATE

APPROVED BY: D R Nordell 6-28-99 DATE
QLEC CHAIRMAN

COLOR LEGEND
RED
BLUE
GREEN
YELLOW
ORANGE
BROWN
PURPLE

CONTROLLED
See Critical Drawing File for Current System Configuration

M-116-2
MONTI CAD DWG 'A'

SIGNIFICANT NUMBER	8700	--	RX	1	– 4420	1	–
GROUP	1	2	3	4	5	CL	6

NSP
MONTICELLO NUCLEAR GENERATING PLANT UNIT 1

MONTICELLO NUCLEAR GENERATING PLANT
P & ID REFERENCE LEG BACKFILL SYSTEM
NUCLEAR BOILER SYSTEM

NORTHERN STATES POWER COMPANY
MINNEAPOLIS

SCALE: NONE REV A
NH-36242-2

NH-36243

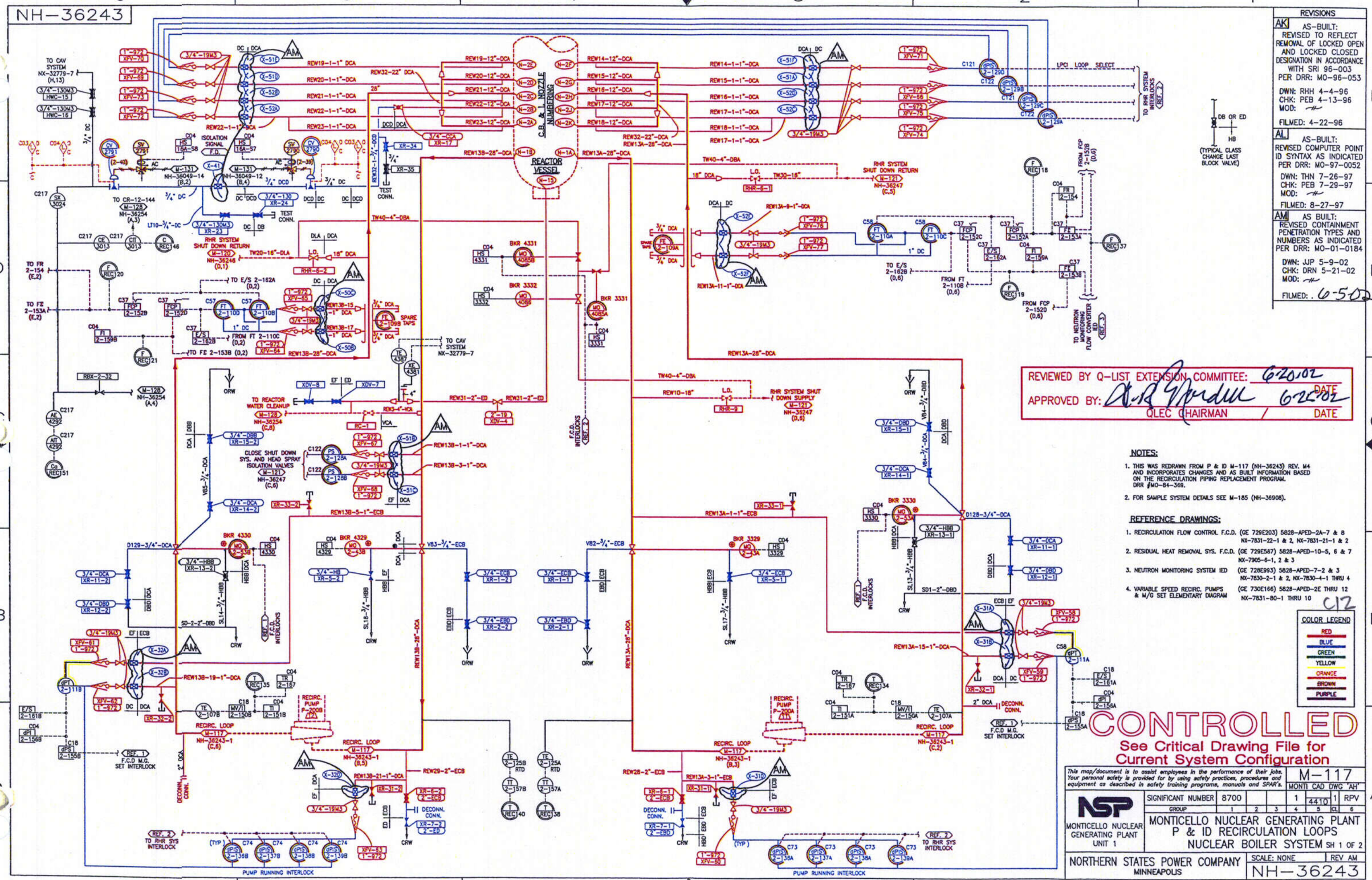

REVISIONS

AK AS-BUILT:
REVISED TO REFLECT REMOVAL OF LOCKED OPEN AND LOCKED CLOSED DESIGNATION IN ACCORDANCE WITH SRI 96-003
PER DRR: MO-96-053
DWN: RHH 4-4-96
CHK: PEB 4-13-96
MOD:
FILMED: 4-22-96

AL AS-BUILT:
REVISED COMPUTER POINT ID SYNTAX AS INDICATED
PER DRR: MO-97-0052
DWN: THN 7-26-97
CHK: PEB 7-29-97
MOD:
FILMED: 8-27-97

AM AS BUILT:
REVISED CONTAINMENT PENETRATION TYPES AND NUMBERS AS INDICATED
PER DRR: MO-01-0184
DWN: JJP 5-9-02
CHK: DRN 5-21-02
MOD:
FILMED: 6-5-02

REVIEWED BY Q-LIST EXTENSION COMMITTEE: 6-20-02 DATE
APPROVED BY: QLEC CHAIRMAN 6-25-02 DATE

NOTES:

1. THIS WAS REDRAWN FROM P & ID M-117 (NH-36243) REV. M4 AND INCORPORATES CHANGES AND AS BUILT INFORMATION BASED ON THE RECIRCULATION PIPING REPLACEMENT PROGRAM. DRR #MO-84-369.
2. FOR SAMPLE SYSTEM DETAILS SEE M-185 (NH-36908).

REFERENCE DRAWINGS:

1. RECIRCULATION FLOW CONTROL F.C.D. (GE 729E203) 5828-APED-2A-7 & 8 NX-7831-22-1 & 2, NX-7831-21-1 & 2
2. RESIDUAL HEAT REMOVAL SYS. F.C.D. (GE 729E587) 5828-APED-10-5, 6 & 7 NX-7905-6-1, 2 & 3
3. NEUTRON MONITORING SYSTEM IED (GE 728E993) 5828-APED-7-2 & 3 NX-7830-2-1 & 2, NX-7830-4-1 THRU 4
4. VARIABLE SPEED RECIRC. PUMPS & M/G SET ELEMENTARY DIAGRAM (GE 730E166) 5828-APED-2E THRU 12 NX-7831-80-1 THRU 10

C12

COLOR LEGEND: RED, BLUE, GREEN, YELLOW, ORANGE, BROWN, PURPLE

CONTROLLED
See Critical Drawing File for Current System Configuration

This map/document is to assist employees in the performance of their jobs. Your personal safety is provided for by using safety practices, procedures and equipment as described in safety training programs, manuals and SPAR's.

M-117

MONTI	CAD	DWG	'AH'
1	4410	1	RPV

SIGNIFICANT NUMBER	8700						
GROUP	1	2	3	4	5	CL	6

NSP
MONTICELLO NUCLEAR GENERATING PLANT UNIT 1

MONTICELLO NUCLEAR GENERATING PLANT
P & ID RECIRCULATION LOOPS
NUCLEAR BOILER SYSTEM SH 1 OF 2

NORTHERN STATES POWER COMPANY
MINNEAPOLIS

SCALE: NONE | REV AM
NH-36243

NH-36243-1

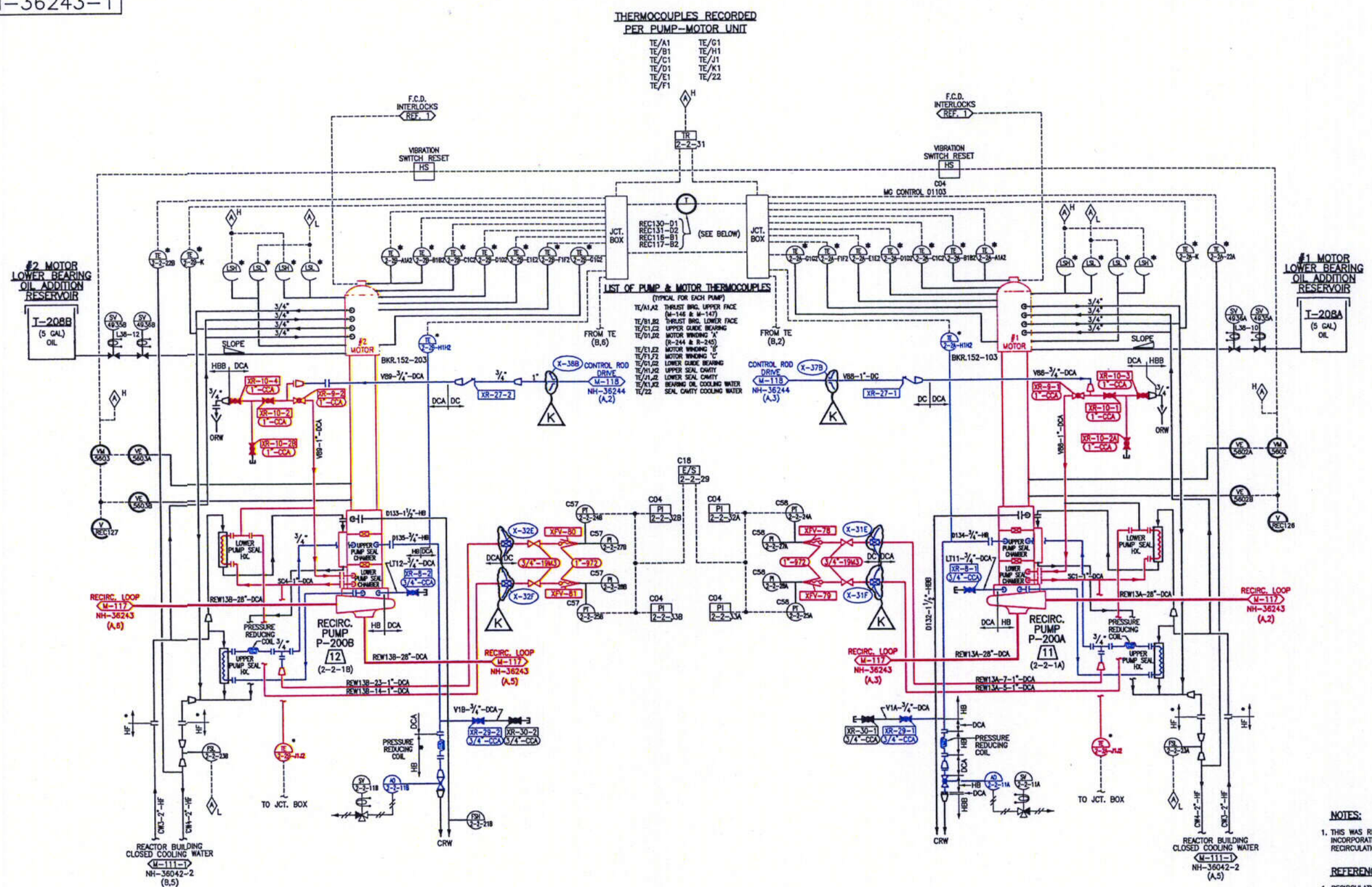

REVISIONS

E AS BUILT: REVISED TO REFLECT AS FOUND CONDITION PER FOI 92-106 PER DRR: MO-94-232
DWN: RHH 10-31-94
CHK: RJR 11-3-94
MOD: 81M010
FILMED: 11-16-94

F AS BUILT: REVISED TO REFLECT AS FOUND CONDITION FOR LOCATION OF INSTRUMENTS (PT's & PI's) FOR RECIRC SYSTEM PER DRR: MO-94-266
DWN: RAD 12-1-94
CHK: DRN 12-2-94
MOD: ~~~
FILMED: 12-12-94

G AS BUILT: REVISED TO REFLECT THE RECIRC. PUMP OIL ADDITION SYSTEM MOD. PER DRR: MO-95-156
DWN: RHH 5-5-95
CHK: MAP 5-9-95
MOD: 94Q210
FILMED: 5-18-95

H AS BUILT: REVISED TO REFLECT CORRECTED DWG. ERROR PER DRR: MO-96-0141
DWN: RHH 1-6-97
CHK: MCL 1-7-97
MOD: 83Z049
FILMED: 1-20-97

J AS-BUILT: REVISED COMPUTER POINT ID's FROM GEPAC TO VAX AS INDICATED PER DRR: MO-97-0052
DWN: RHH 7-14-97
CHK: PEB 7-29-97
MOD: ~~~
FILMED: 8-27-97

K AS BUILT: REVISED CONTAINMENT PENETRATION TYPES AND NUMBERS AS INDICATED PER DRR: MO-01-0184
DWN: JJP 5-9-02
CHK: DRN 5-21-02
MOD: ~~~
FILMED: 6-5-02

C13

NOTES:

1. THIS WAS REDRAWN FROM P&ID M-117 (NH-36243) REV. M2 AND INCORPORATES CHANGES AND AS BUILT INFORMATION BASED ON THE RECIRCULATION PIPING REPLACEMENT PROGRAM.

REFERENCE DRAWINGS:

1. RECIRCULATION FLOW CONTROL F.C.D. (GE 729E203) 5828-APED-2A-7 8C8 (DRAWING IS IN TECH. MANUAL NX-7831-411)

COLOR LEGEND: RED, BLUE, GREEN, YELLOW, ORANGE, BROWN, PURPLE

CONTROLLED
See Critical Drawing File for Current System Configuration

REVIEWED BY Q-LIST EXTENSION COMMITTEE: 6/25/02
APPROVED BY: [signature] 6/25/02
QLEC CHAIRMAN / DATE

This map/document is to assist employees in the performance of their jobs. Your personal safety is provided for by using safety practices, procedures and equipment as described in safety training programs, manuals and SPAR's.

M-117
MONTI CAD DWG 'D'

SIGNIFICANT NUMBER	8700		DW	1	4410	1	RPV
GROUP	1	2	3	4	5	CL	6

NSP
MONTICELLO NUCLEAR GENERATING PLANT UNIT 1

MONTICELLO NUCLEAR GENERATING PLANT
P&ID RECIRC. LOOPS, PUMPS & MOTORS
NUCLEAR BOILER SYSTEM SHT. 2 OF 2

NORTHERN STATES POWER COMPANY
MINNEAPOLIS

SCALE: NONE | REV K
NH-36243-1

NH-36244

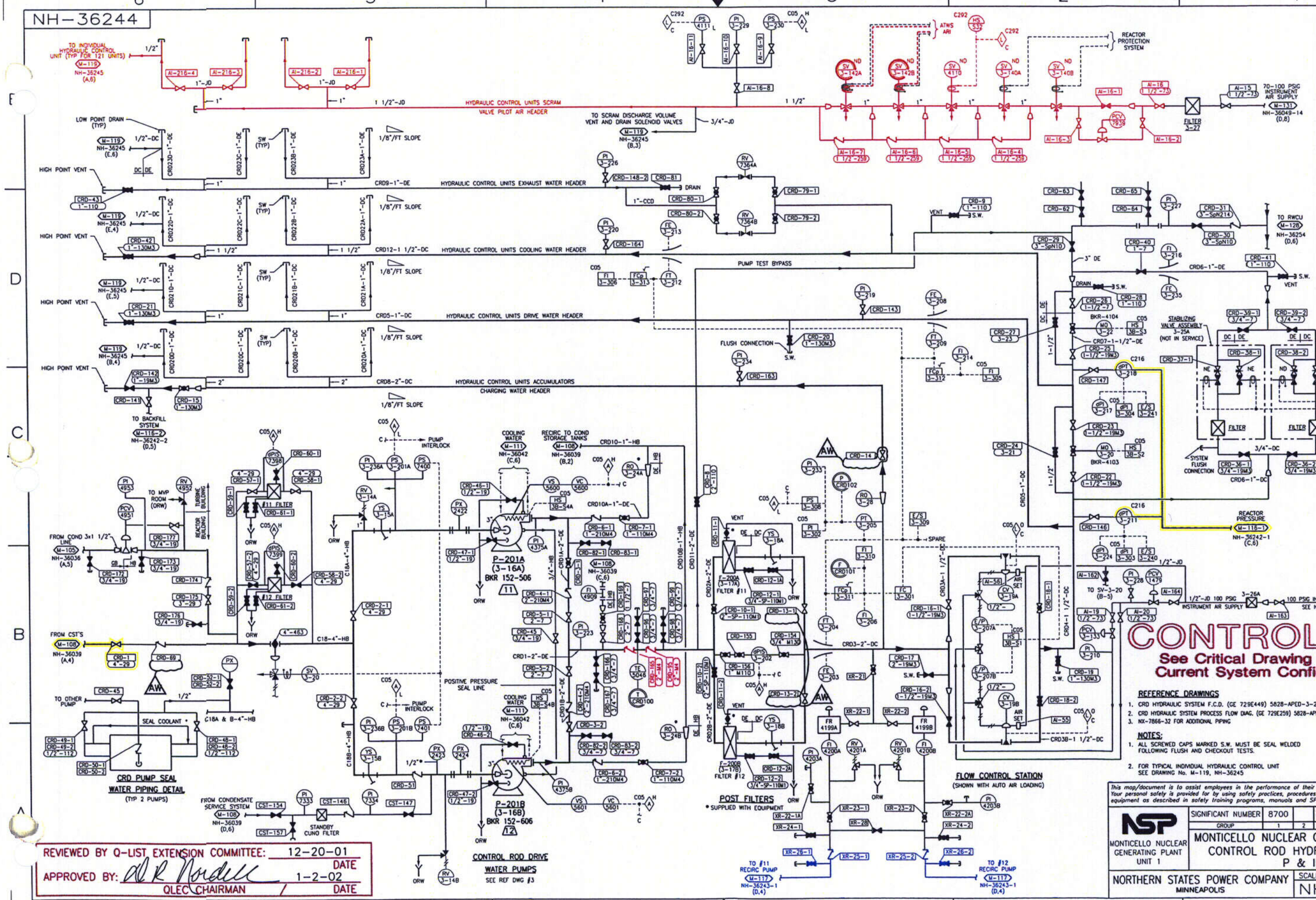

REVISIONS

AU AS-BUILT: REVISED TO REFLECT AS FOUND CONDITION IN ACCORDANCE WITH SRI 92-025, ADDED VALVES, & MADE VARIOUS CORRECTIONS AS SHOWN PER DRR: MO-99-0210
DWN: RHH 11-15-99
CHK: SPV 11-16-99
MOD:
FILMED: 11-23-99

AV AS-BUILT: REVISED TO REFLECT AS-FOUND CONDITION OF PLANT PIPING CONFIGURATION PER DRR: MO-01-0038
DWN: JJP 3-14-01
CHK: SPV 3-15-01
MOD:
FILMED: 3-20-01

AW AS-BUILT: REVISED UNDER THE CRD VALVE REPLACEMENT MOD. PER DRR: MO-01-0156
DWN: JJP 11-16-01
CHK: PEB 11-18-01
MOD: 01Q060
FILMED: 11-26-01

REFERENCE DRAWINGS

1. CRD HYDRAULIC SYSTEM F.C.D. (GE 729E449) 5828-APED-3-28
2. CRD HYDRAULIC SYSTEM PROCESS FLOW DIAG. (GE 729E258) 5828-APED-3-21-2
3. NX-7866-32 FOR ADDITIONAL PIPING

NOTES:

1. ALL SCREWED CAPS MARKED S.W. MUST BE SEAL WELDED FOLLOWING FLUSH AND CHECKOUT TESTS.
2. FOR TYPICAL INDIVIDUAL HYDRAULIC CONTROL UNIT SEE DRAWING No. M-119, NH-36245

COLOR LEGEND: RED, BLUE, GREEN, YELLOW, ORANGE, BROWN, PURPLE

This map/document is to assist employees in the performance of their jobs. Your personal safety is provided for by using safety practices, procedures and equipment as described in safety training programs, manuals and SPAR's.

M-118

SIGNIFICANT NUMBER	8700		TURB	1	CRD
GROUP	1	2	3	4	5 CL 6

MONTI CAD DWG 'AL' 4420

NSP — MONTICELLO NUCLEAR GENERATING PLANT UNIT 1

MONTICELLO NUCLEAR GENERATING PLANT
CONTROL ROD HYDRAULIC SYSTEM
P & ID

NORTHERN STATES POWER COMPANY
MINNEAPOLIS

SCALE: NONE | REV AW
NH-36244

REVIEWED BY Q-LIST EXTENSION COMMITTEE: 12-20-01 DATE
APPROVED BY: [signature] 1-2-02
QLEC CHAIRMAN / DATE

NH-36245

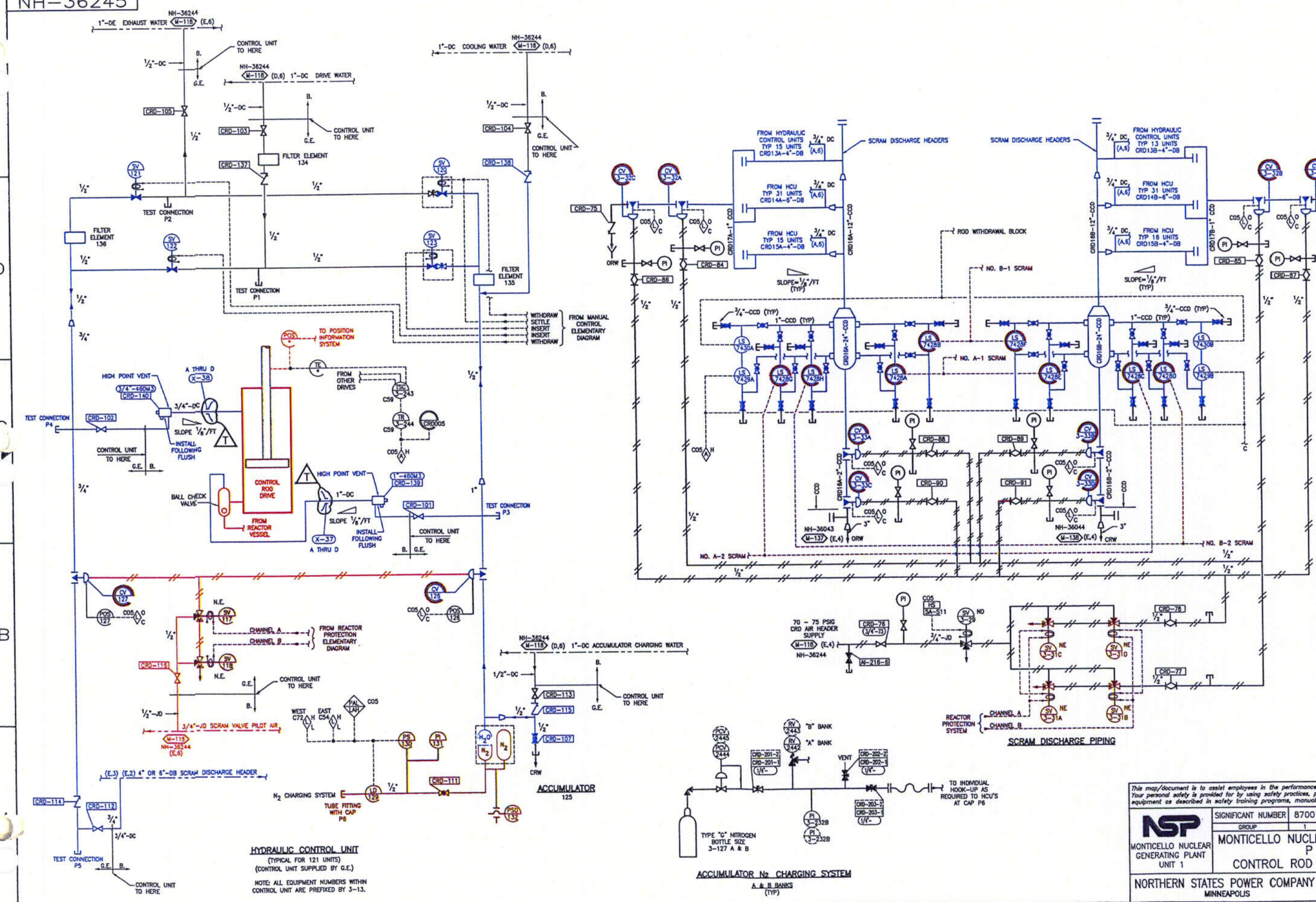

REVISIONS

S — AS-BUILT: REVISED TO REFLECT AS FOUND CONDITION IN ACCORDANCE WITH SRI 92-025, ADDED VALVE TAGS AND BALL CHECK VALVE IN CRD INSERT LINE PER DRR: MO-98-0098
DWN: RHH 5-22-98
CHK: SPV 5-27-98
MOD:
FILMED: 6-11-98

T — AS BUILT: REVISED CONTAINMENT PENETRATION TYPES AND NUMBERS AS INDICATED PER DRR: MO-01-0184
DWN: JJP 5-20-02
CHK: DRN 5-21-02
MOD:
FILMED: 6-5-02

C15

CONTROLLED
See Critical Drawing File for Current System Configuration
REVIEWED BY Q-LIST EXTENSION COMMITTEE: 6-17-02 DATE
APPROVED BY: 6-24-02 DATE
QLEC CHAIRMAN

COLOR LEGEND
RED
BLUE
GREEN
YELLOW
ORANGE
BROWN
PURPLE

This map/document is to assist employees in the performance of their jobs. Your personal safety is provided for by using safety practices, procedures and equipment as described in safety training programs, manuals and SPAR's.

M-119

MONTI CAD DWG 'M'					
SIGNIFICANT NUMBER	8700		RX	1	4420	1	CRD
GROUP	1	2	3	4	5	CL	6

NSP
MONTICELLO NUCLEAR GENERATING PLANT UNIT 1

MONTICELLO NUCLEAR GENERATING PLANT
P & I D
CONTROL ROD HYDRAULIC SYSTEM

NORTHERN STATES POWER COMPANY
MINNEAPOLIS

SCALE: NONE
REV T
NH-36245

NH-36246

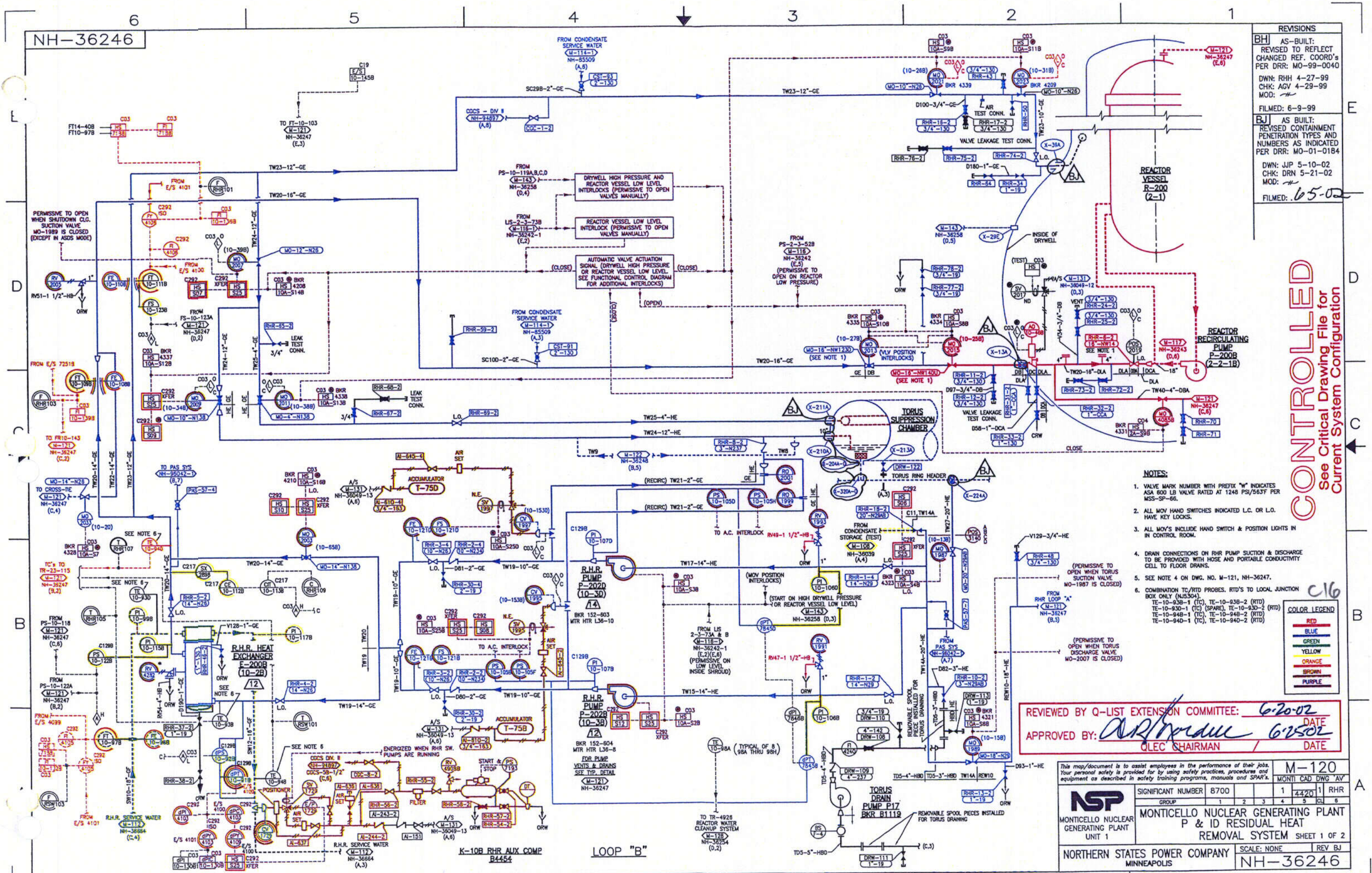

REVISIONS

BH AS-BUILT: REVISED TO REFLECT CHANGED REF. COORD's PER DRR: MO-99-0040
DWN: RHH 4-27-99
CHK: AGV 4-29-99
MOD:
FILMED: 6-9-99

BJ AS BUILT: REVISED CONTAINMENT PENETRATION TYPES AND NUMBERS AS INDICATED PER DRR: MO-01-0184
DWN: JJP 5-10-02
CHK: DRN 5-21-02
MOD:
FILMED: 65-02

CONTROLLED
See Critical Drawing File for Current System Configuration

NOTES:

1. VALVE MARK NUMBER WITH PREFIX "W" INDICATES ASA 600 LB VALVE RATED AT 1248 PSI/563F PER MSS-SP-66.
2. ALL MOV HAND SWITCHES INDICATED L.C. OR L.O. HAVE KEY LOCKS.
3. ALL MOV'S INCLUDE HAND SWITCH & POSITION LIGHTS IN IN CONTROL ROOM.
4. DRAIN CONNECTIONS ON RHR PUMP SUCTION & DISCHARGE TO BE PROVIDED WITH HOSE AND PORTABLE CONDUCTIVITY CELL TO FLOOR DRAINS.
5. SEE NOTE 4 ON DWG. NO. M-121, NH-36247.
6. COMBINATION TC/RTD PROBES. RTD'S TO LOCAL JUNCTION BOX ONLY (NJ5304).
   TE-10-938-1 (TC), TE-10-938-2 (RTD)
   TE-10-930-1 (TC) (SPARE), TE-10-930-2 (RTD)
   TE-10-948-1 (TC), TE-10-948-2 (RTD)
   TE-10-940-1 (TC), TE-10-940-2 (RTD)

C16

COLOR LEGEND
RED
BLUE
GREEN
YELLOW
ORANGE
BROWN
PURPLE

REVIEWED BY Q-LIST EXTENSION COMMITTEE: 6-20-02 DATE
APPROVED BY: QLEC CHAIRMAN 6-25-02 DATE

This map/document is to assist employees in the performance of their jobs. Your personal safety is provided for by using safety practices, procedures and equipment as described in safety training programs, manuals and SPAR's.

NSP
MONTICELLO NUCLEAR GENERATING PLANT UNIT 1

SIGNIFICANT NUMBER	8700					M-120	
						MONTI CAD DWG 'AV'	
						1 4420 1	RHR
GROUP	1	2	3	4	5	CU 6	

MONTICELLO NUCLEAR GENERATING PLANT
P & ID RESIDUAL HEAT REMOVAL SYSTEM SHEET 1 OF 2

NORTHERN STATES POWER COMPANY
MINNEAPOLIS

SCALE: NONE REV BJ
NH-36246

NH-36247

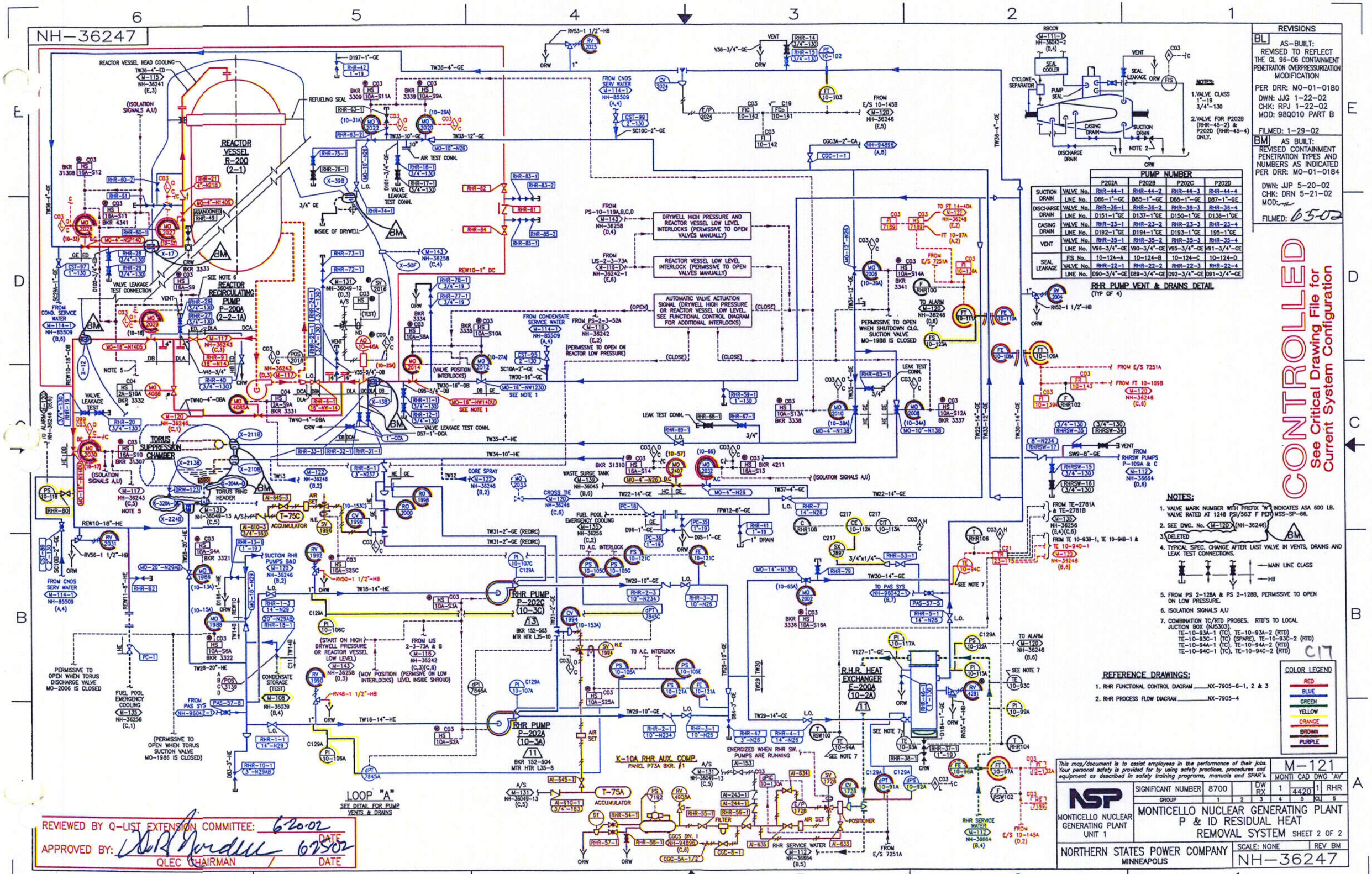

REVISIONS

BL AS-BUILT: REVISED TO REFLECT THE GL 96-06 CONTAINMENT PENETRATION OVERPRESSURIZATION MODIFICATION
PER DRR: MO-01-0180
DWN: JJG 1-22-02
CHK: RPJ 1-22-02
MOD: 98Q010 PART B
FILMED: 1-29-02

BM AS BUILT: REVISED CONTAINMENT PENETRATION TYPES AND NUMBERS AS INDICATED PER DRR: MO-01-0184
DWN: JJP 5-20-02
CHK: DRN 5-21-02
MOD:
FILMED: 6-5-02

CONTROLLED
See Critical Drawing File for Current System Configuration

REVIEWED BY Q-LIST EXTENSION COMMITTEE: 6-20-02 DATE
APPROVED BY: QLEC CHAIRMAN 6-25-02 DATE

NH-36248

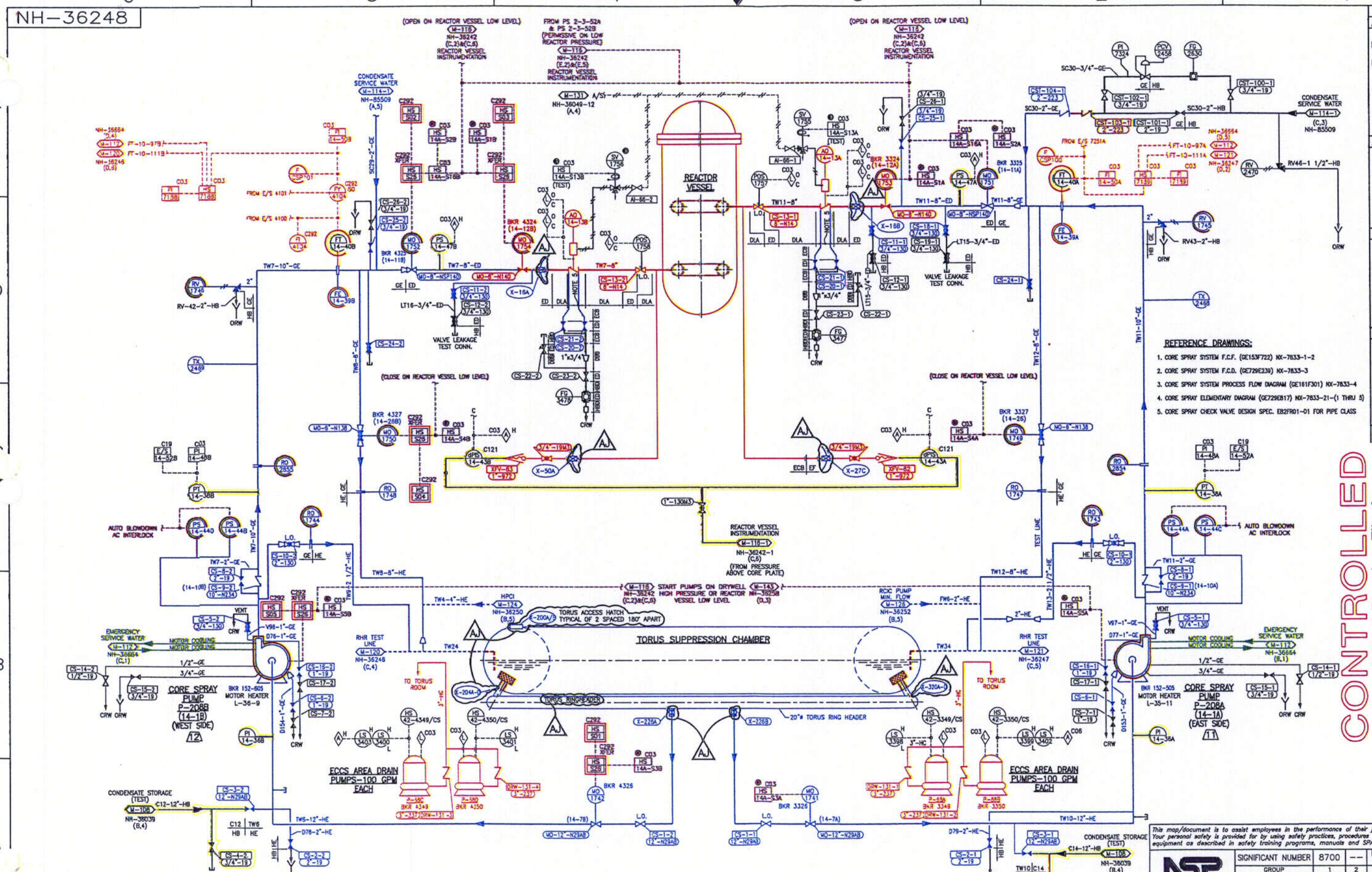

REVISIONS

AF AS-BUILT:
REVISED TO REFLECT REMOVAL OF LOCKED OPEN AND LOCKED CLOSED DESIGNATION IN ACCORDANCE WITH SRI 96-003
PER DRR: MO-96-053
DWN: RHH 4-4-96
CHK: PEB 4-13-96
MOD: —
FILMED: 4-22-96

AG AS-BUILT:
REVISED TO REFLECT CHANGED REF. COORD's
PER DRR: MO-99-0040
DWN: RHH 4-12-99
CHK: AGV 4-29-99
MOD: —
FILMED: 6-9-99

AH AS-BUILT:
REVISED KEEPFILL LINE DESIGNATION AS INDICATED
PER DRR: MO-00-0170
DWN: JJG 8-3-00
CHK: JMD 8-3-00
MOD: —
FILMED: 8-4-00

AJ AS BUILT:
REVISED CONTAINMENT PENETRATION TYPES AND NUMBERS AS INDICATED
PER DRR: MO-01-0184
DWN: JJP 5-14-02
CHK: DRN 5-21-02
MOD: —
FILMED: 6-5-02

REFERENCE DRAWINGS:

1. CORE SPRAY SYSTEM F.C.F. (GE153F722) NX-7833-1-2
2. CORE SPRAY SYSTEM F.C.D. (GE729E239) NX-7833-3
3. CORE SPRAY SYSTEM PROCESS FLOW DIAGRAM (GE161F301) NX-7833-4
4. CORE SPRAY ELEMENTARY DIAGRAM (GE729E817) NX-7833-21-(1 THRU 5)
5. CORE SPRAY CHECK VALVE DESIGN SPEC. E82FR01-01 FOR PIPE CLASS

CONTROLLED
See Critical Drawing File for Current System Configuration

C18

COLOR LEGEND
RED
BLUE
GREEN
YELLOW
ORANGE
BROWN
PURPLE

REVIEWED BY Q-LIST EXTENSION COMMITTEE: 6/20/02 DATE
APPROVED BY: [signature] 6/25/02
QLEC CHAIRMAN / DATE

This map/document is to assist employees in the performance of their jobs. Your personal safety is provided for by using safety practices, procedures and equipment as described in safety training programs, manuals and SPAR's.

M-122

SIGNIFICANT NUMBER	8700	--	DW RX	1	4420	1	CSP
GROUP	1	2	3	4	5	CL	6

MONTI CAD DWG AB

MONTICELLO NUCLEAR GENERATING PLANT UNIT 1

MONTICELLO NUCLEAR GENERATING PLANT
P & ID
CORE SPRAY SYSTEM

NORTHERN STATES POWER COMPANY
MINNEAPOLIS

SCALE: NONE REV AJ

NH-36248

NH-36249

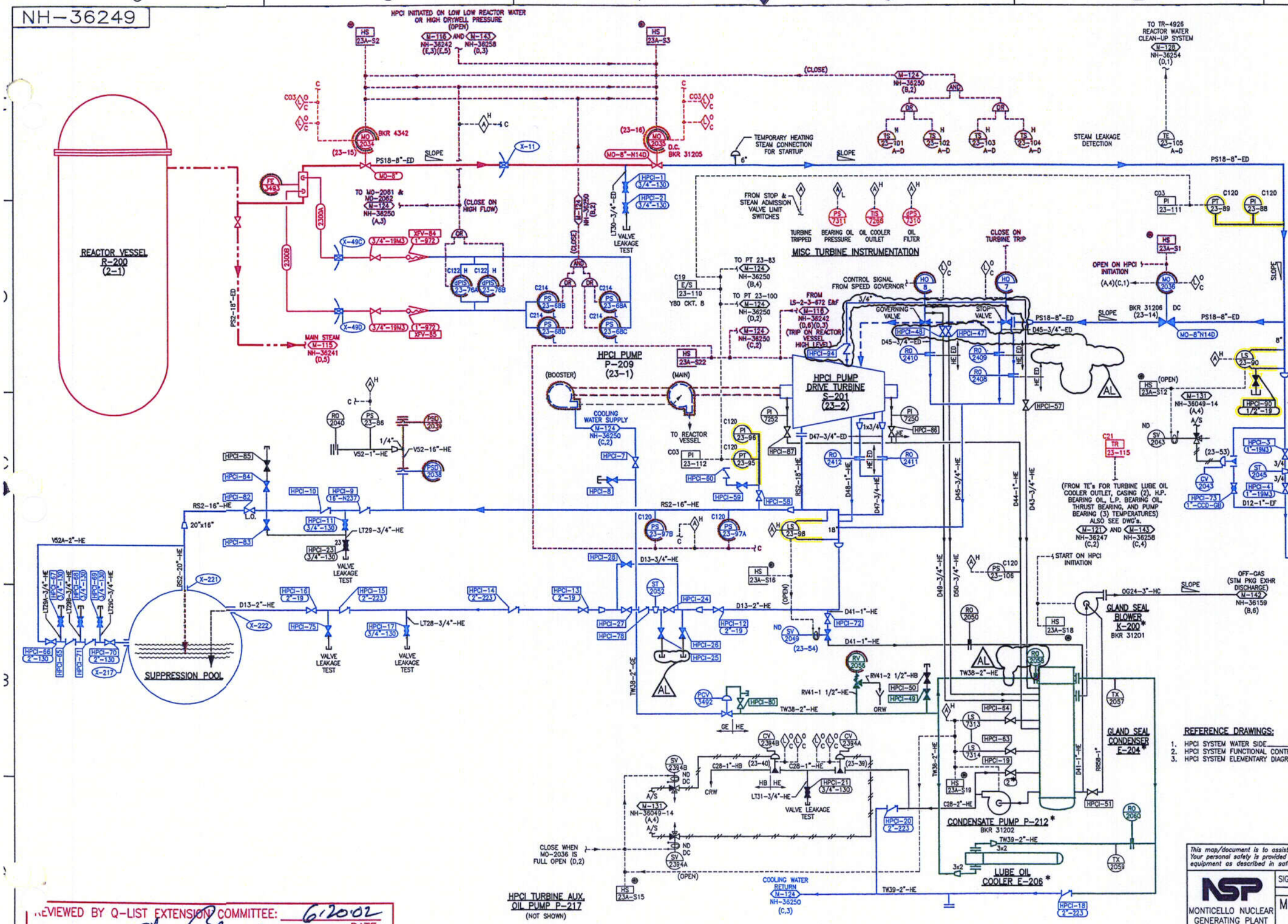

CONTROLLED
See Critical Drawing File for Current System Configuration

REVISIONS

AJ AS-BUILT: REVISED TO REFLECT THE HPCI GROUP 4 ISOLATION MODIFICATION
PER DRR: MO-01-0167
DWN: JJG/JJP 11-28-01
CHK: PEB 11-30-01
MOD: 00Q035
FILMED: 12-20-01

AK AS BUILT: REVISED CONTAINMENT PENETRATION TYPES AND NUMBERS AS INDICATED
PER DRR: MO-01-0184
DWN: JJP 5-14-02
CHK: DRN 5-21-02
MOD:
FILMED: .

AL AS BUILT: REVISED TO REFLECT CORRECTION OF MINOR DRAWING ERRORS
PER DRR: MO-02-0096
DWN: JJP 5-28-02
CHK: DJP 5-30-02
MOD:
FILMED: 6-6-02

REFERENCE DRAWINGS:

1. HPCI SYSTEM WATER SIDE M-124, NH-36250
2. HPCI SYSTEM FUNCTIONAL CONTROL DIAGRAM ..... NX-8292-15-1 THRU 3
3. HPCI SYSTEM ELEMENTARY DIAGRAM ..... NX-8292-12-1 THRU 7

C19

COLOR LEGEND
RED
BLUE
GREEN
YELLOW
ORANGE
BROWN
PURPLE

This map/document is to assist employees in the performance of their jobs. Your personal safety is provided for by using safety practices, procedures and equipment as described in safety training programs, manuals and SPAR's.

M-123
MONTI CAD DWG 'W'

SIGNIFICANT NUMBER	8700		RX	1	4420	1	HPC
GROUP	1	2	3	4	5	CL	6

NSP
MONTICELLO NUCLEAR GENERATING PLANT UNIT 1

MONTICELLO NUCLEAR GENERATING PLANT
P & ID (STEAM SIDE)
HIGH PRESSURE COOLANT INJECTION SYS.

NORTHERN STATES POWER COMPANY
MINNEAPOLIS

SCALE: NONE | REV AL
NH-36249

REVIEWED BY Q-LIST EXTENSION COMMITTEE: 6-20-02 DATE
APPROVED BY: QLEC CHAIRMAN / DATE 6-25-02

NH-36250

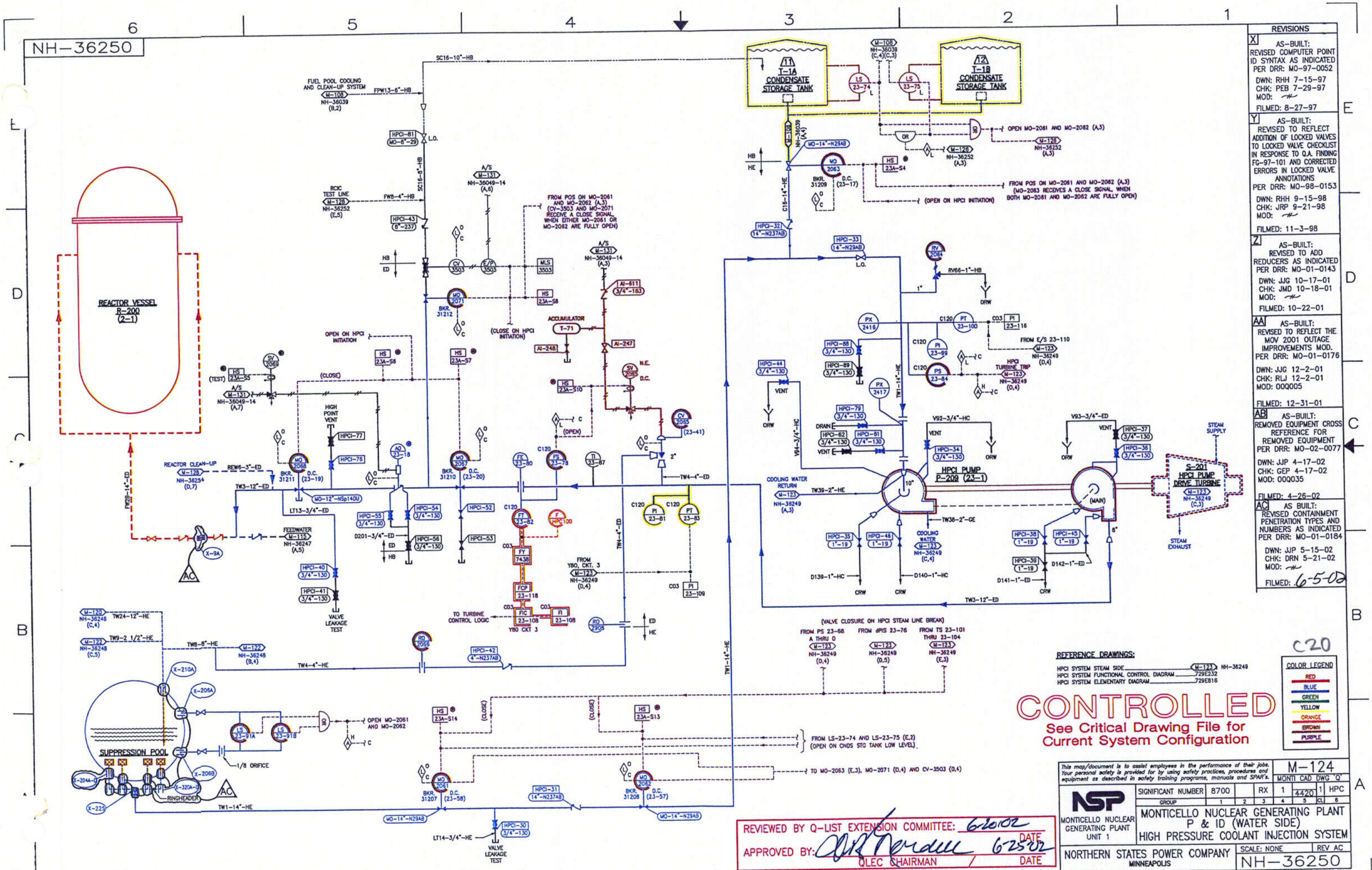

REVISIONS

X AS-BUILT: REVISED COMPUTER POINT ID SYNTAX AS INDICATED PER DRR: MO-97-0052
DWN: RHH 7-15-97
CHK: PEB 7-29-97
MOD:
FILMED: 8-27-97

Y AS-BUILT: REVISED TO REFLECT ADDITION OF LOCKED VALVES TO LOCKED VALVE CHECKLIST IN RESPONSE TO Q.A. FINDING FG-97-101 AND CORRECTED ERRORS IN LOCKED VALVE ANNOTATIONS PER DRR: MO-98-0153
DWN: RHH 9-15-98
CHK: JRP 9-21-98
MOD:
FILMED: 11-3-98

Z AS-BUILT: REVISED TO ADD REDUCERS AS INDICATED PER DRR: MO-01-0143
DWN: JJG 10-17-01
CHK: JMD 10-18-01
MOD:
FILMED: 10-22-01

AA AS-BUILT: REVISED TO REFLECT THE MOV 2001 OUTAGE IMPROVEMENTS MOD. PER DRR: MO-01-0176
DWN: JJG 12-2-01
CHK: RLJ 12-2-01
MOD: 00Q005
FILMED: 12-31-01

AB AS-BUILT: REMOVED EQUIPMENT CROSS REFERENCE FOR REMOVED EQUIPMENT PER DRR: MO-02-0077
DWN: JJP 4-17-02
CHK: GEP 4-17-02
MOD: 00Q035
FILMED: 4-26-02

AC AS BUILT: REVISED CONTAINMENT PENETRATION TYPES AND NUMBERS AS INDICATED PER DRR: MO-01-0184
DWN: JJP 5-15-02
CHK: DRN 5-21-02
MOD:
FILMED: 6-5-02

REFERENCE DRAWINGS:

HPCI SYSTEM STEAM SIDE	M-123 NH-36249
HPCI SYSTEM FUNCTIONAL CONTROL DIAGRAM	729E232
HPCI SYSTEM ELEMENTARY DIAGRAM	729E816

COLOR LEGEND
RED
BLUE
GREEN
YELLOW
ORANGE
BROWN
PURPLE

CONTROLLED
See Critical Drawing File for Current System Configuration

REVIEWED BY Q-LIST EXTENSION COMMITTEE: 6-20-02 DATE
APPROVED BY: QLEC CHAIRMAN 6-25-02 DATE

This map/document is to assist employees in the performance of their jobs. Your personal safety is provided for by using safety practices, procedures and equipment as described in safety training programs, manuals and SPAR's.

M-124

MONTI	CAD	DWG	'Q'
SIGNIFICANT NUMBER 8700	RX	1	HPC
GROUP 1 2 3	4 5	CL	6
	4420	1	

NSP MONTICELLO NUCLEAR GENERATING PLANT UNIT 1

MONTICELLO NUCLEAR GENERATING PLANT
P & ID (WATER SIDE)
HIGH PRESSURE COOLANT INJECTION SYSTEM

NORTHERN STATES POWER COMPANY MINNEAPOLIS

SCALE: NONE REV AC

NH-36250

NH-36251

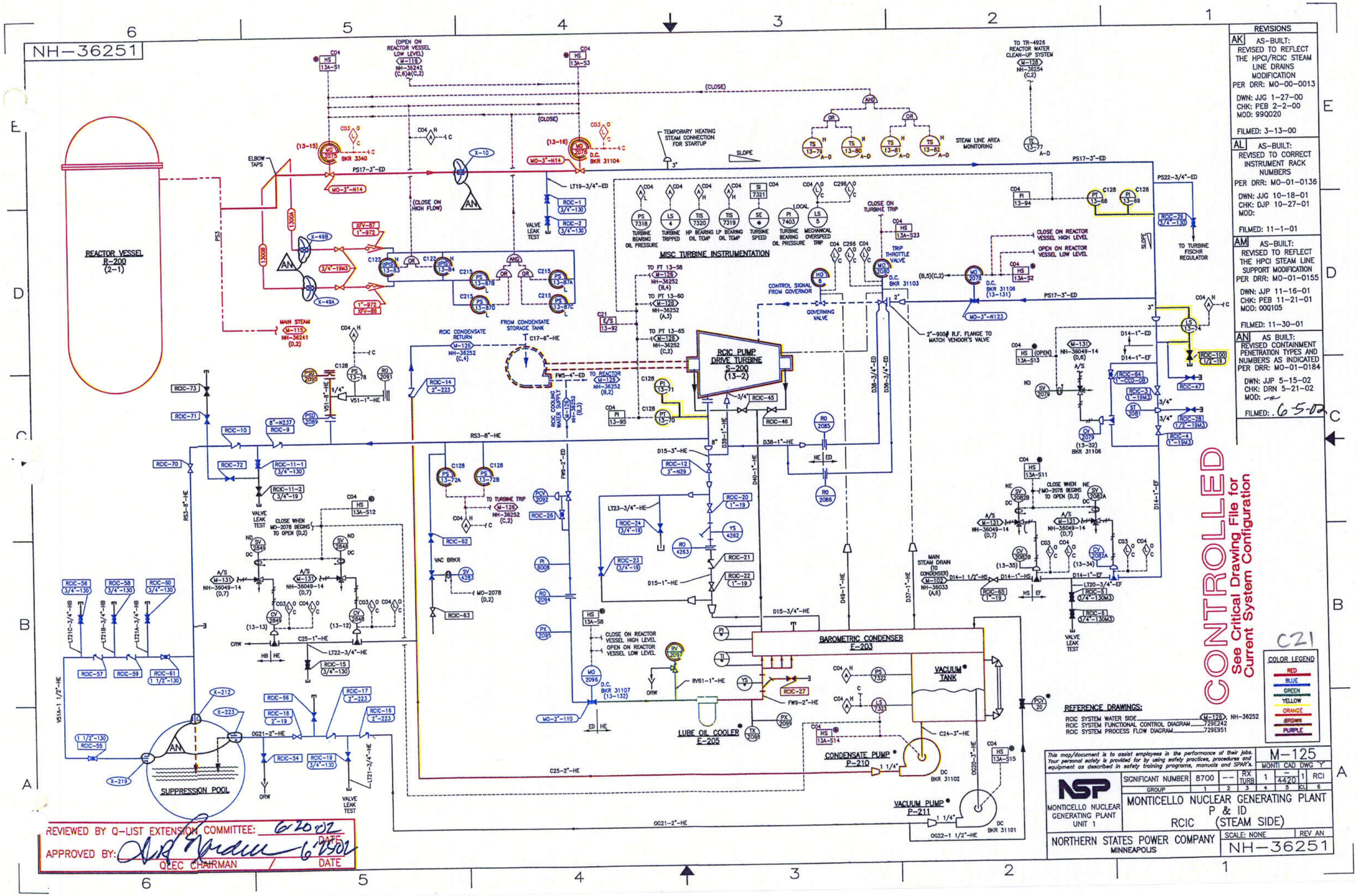

REVISIONS

AK AS-BUILT: REVISED TO REFLECT THE HPCI/RCIC STEAM LINE DRAINS MODIFICATION PER DRR: MO-00-0013
DWN: JJG 1-27-00
CHK: PEB 2-2-00
MOD: 99Q020
FILMED: 3-13-00

AL AS-BUILT: REVISED TO CORRECT INSTRUMENT RACK NUMBERS PER DRR: MO-01-0136
DWN: JJG 10-18-01
CHK: DJP 10-27-01
MOD:
FILMED: 11-1-01

AM AS-BUILT: REVISED TO REFLECT THE HPCI STEAM LINE SUPPORT MODIFICATION PER DRR: MO-01-0155
DWN: JJP 11-16-01
CHK: PEB 11-21-01
MOD: 00Q105
FILMED: 11-30-01

AN AS BUILT: REVISED CONTAINMENT PENETRATION TYPES AND NUMBERS AS INDICATED PER DRR: MO-01-0184
DWN: JJP 5-15-02
CHK: DRN 5-21-02
MOD: —
FILMED: 6-5-02

REVIEWED BY Q-LIST EXTENSION COMMITTEE: 6-20-02 DATE
APPROVED BY: QLEC CHAIRMAN 6-7-02 DATE

NH-36252

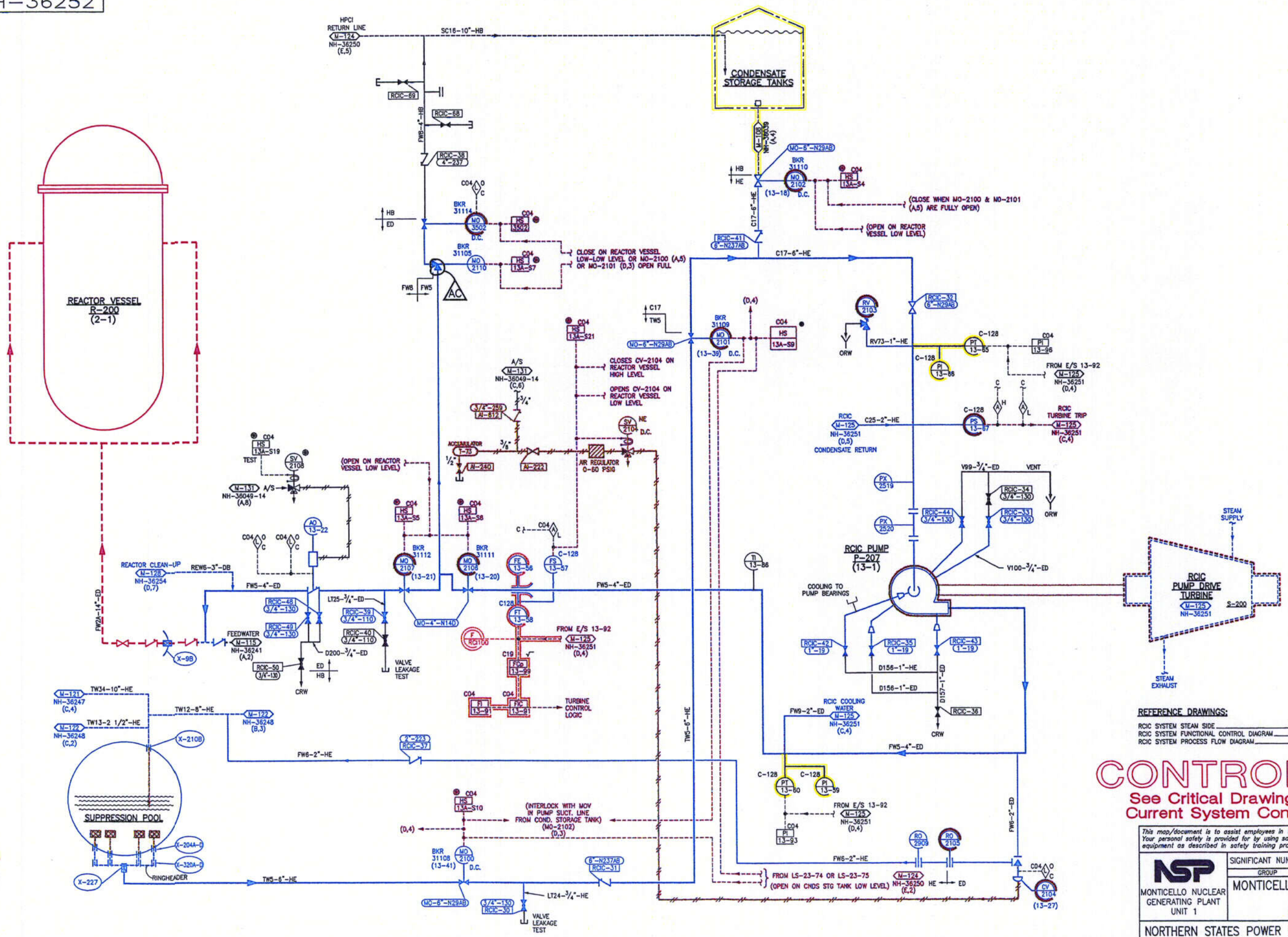

REVISIONS

AA AS-BUILT: REVISED TO REFLECT THE AS-FOUND CONDITION PER DRR: MO-02-0008
DWN: JJP 1-8-02
CHK: SMS 1-15-02
MOD:
FILMED: 1-21-02

AB AS BUILT: REVISED CONTAINMENT PENETRATION TYPES AND NUMBERS AS INDICATED PER DRR: MO-01-0184
DWN: JJP 5-17-02
CHK: DRN 5-21-02
MOD:
FILMED: .

AC AS BUILT: REVISED TO REFLECT CORRECTION OF MINOR DRAWING ERRORS PER DRR: MO-02-0096
DWN: JJP 5-22-02
CHK: DJP 5-30-02
MOD:
FILMED: 6-6-02

C22

REVIEWED BY Q-LIST EXTENSION COMMITTEE: 6/20/02 DATE
APPROVED BY: 6/25/02 DATE
Q.L.E.C. CHAIRMAN

REFERENCE DRAWINGS:

RCIC SYSTEM STEAM SIDE M-125 NH-36251
RCIC SYSTEM FUNCTIONAL CONTROL DIAGRAM 729E242
RCIC SYSTEM PROCESS FLOW DIAGRAM 729E951

COLOR LEGEND
RED
BLUE
GREEN
YELLOW
ORANGE
BROWN
PURPLE

CONTROLLED
See Critical Drawing File for Current System Configuration

This map/document is to assist employees in the performance of their jobs. Your personal safety is provided for by using safety practices, procedures and equipment as described in safety training programs, manuals and SPAR's.

M-126

MONTI	CAD	DWG 'V'					
SIGNIFICANT NUMBER	8700		RX	1	4420	1	RCI
GROUP	1	2	3	4	5	CL	6

NSP
MONTICELLO NUCLEAR GENERATING PLANT UNIT 1

MONTICELLO NUCLEAR GENERATING PLANT
P & ID
RCIC (WATER SIDE)

NORTHERN STATES POWER COMPANY
MINNEAPOLIS

SCALE: NONE
REV AC
NH-36252

NH-36253

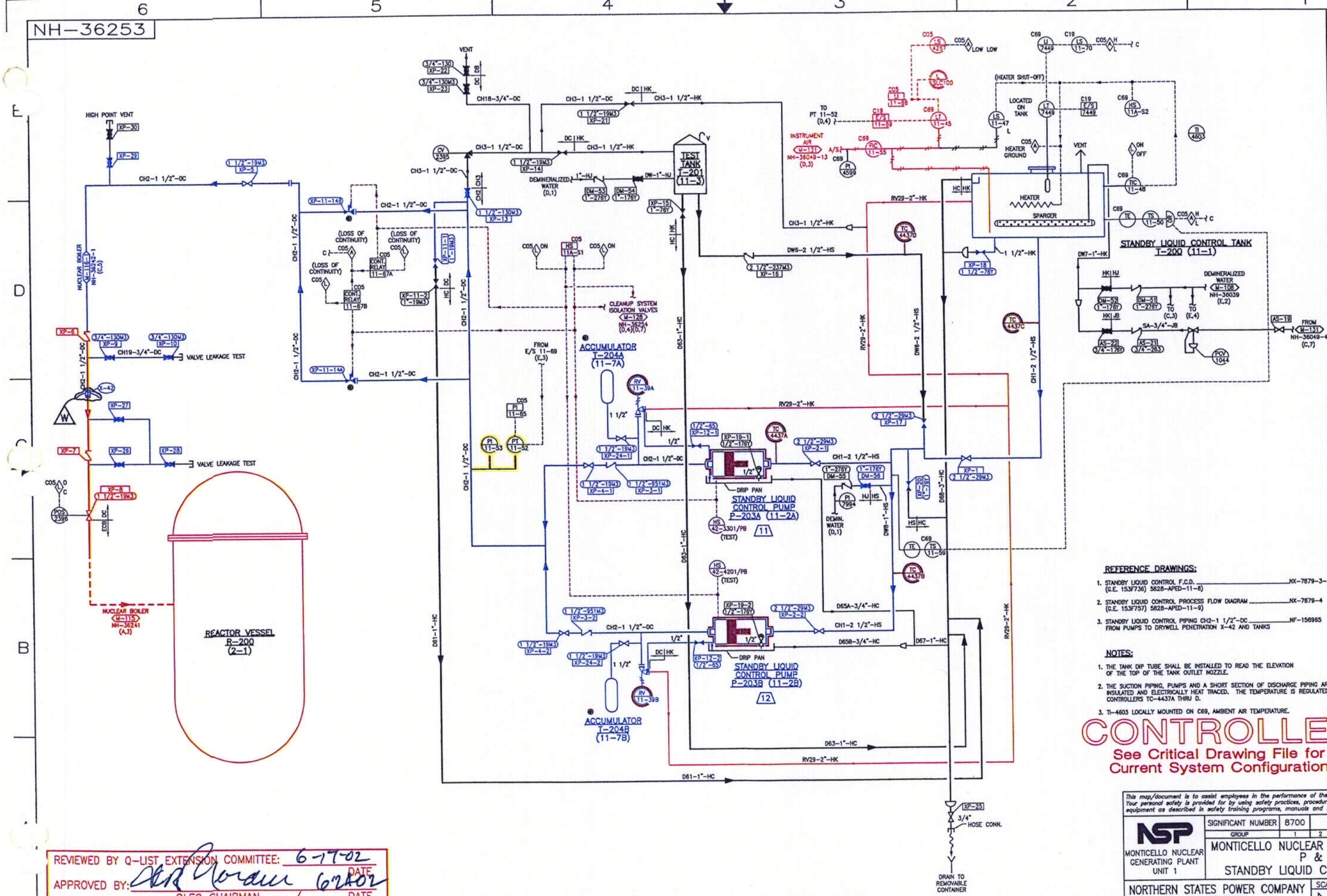

REVISIONS

R AS-BUILT:
REVISED TO REFLECT REMOVAL OF LOCKED OPEN AND LOCKED CLOSED DESIGNATION IN ACCORDANCE WITH SRI 96-003 PER DRR: MO-96-053
DWN: RHH 4-4-96
CHK: PEB 4-13-96
MOD:
FILMED: 4-22-96

S AS-BUILT:
REVISED TO REFLECT SBLC RELIEF VALVE REPLACEMENT MOD. PER DRR: MO-96-0256
DWN: RHH 12-12-96
CHK: RJ 12-13-96
MOD: 960065
FILMED: 12-19-96

T AS-BUILT:
REVISED COMPUTER POINT ID SYNTAX AS INDICATED PER DRR: MO-97-0052
DWN: RHH 7-15-97
CHK: PEB 7-29-97
MOD:
FILMED: 8-27-97

U AS-BUILT:
REVISED TO REFLECT AS FOUND CONDITION IN ACCORDANCE WITH SRI 92-025, CORRECTED HS No. TO MATCH ACTUAL POWER SUPPLY PER DRR: MO-99-0025
DWN: RHH 2-12-99
CHK: RCM 3-29-99
MOD:
FILMED: 4-1-99

V AS-BUILT:
REVISED TO REFLECT CHANGED REF. COORD's PER DRR: MO-99-0040
DWN: RHH 4-12-99
CHK: AGV 4-29-99
MOD:
FILMED: 6-9-99

W AS BUILT:
REVISED CONTAINMENT PENETRATION TYPES AND NUMBERS AS INDICATED PER DRR: MO-01-0184
DWN: JJP 5-17-02
CHK: DRN 5-21-02
MOD:
FILMED: 65-02

REFERENCE DRAWINGS:

1. STANDBY LIQUID CONTROL F.C.D. (G.E. 153F736) 5828-APED-11-8) NX-7879-3-1
2. STANDBY LIQUID CONTROL PROCESS FLOW DIAGRAM (G.E. 153F757) 5828-APED-11-9) NX-7879-4
3. STANDBY LIQUID CONTROL PIPING CH2-1 1/2"-DC FROM PUMPS TO DRYWELL PENETRATION X-42 AND TANKS NF-156965

NOTES:

1. THE TANK DIP TUBE SHALL BE INSTALLED TO READ THE ELEVATION OF THE TOP OF THE TANK OUTLET NOZZLE.
2. THE SUCTION PIPING, PUMPS AND A SHORT SECTION OF DISCHARGE PIPING ARE INSULATED AND ELECTRICALLY HEAT TRACED. THE TEMPERATURE IS REGULATED BY CONTROLLERS TC-4437A THRU D.
3. TI-4603 LOCALLY MOUNTED ON C69, AMBIENT AIR TEMPERATURE.

C23

CONTROLLED
See Critical Drawing File for Current System Configuration

COLOR LEGEND
RED
BLUE
GREEN
YELLOW
ORANGE
BROWN
PURPLE

REVIEWED BY Q-LIST EXTENSION COMMITTEE: 6-17-02 DATE
APPROVED BY: QLEC CHAIRMAN / DATE 6-24-02

This map/document is to assist employees in the performance of their jobs. Your personal safety is provided for by using safety practices, procedures and equipment as described in safety training programs, manuals and SPAR's.

M-127
MONTI CAD DWG 'P'

SIGNIFICANT NUMBER	8700		RX	1	4420	1	SLC
GROUP	1	2	3	4	5	CL	6

NSP
MONTICELLO NUCLEAR GENERATING PLANT UNIT 1

MONTICELLO NUCLEAR GENERATING PLANT
P & ID
STANDBY LIQUID CONTROL SYSTEM

NORTHERN STATES POWER COMPANY
MINNEAPOLIS

SCALE: NONE
REV W
NH-36253

NH-36254

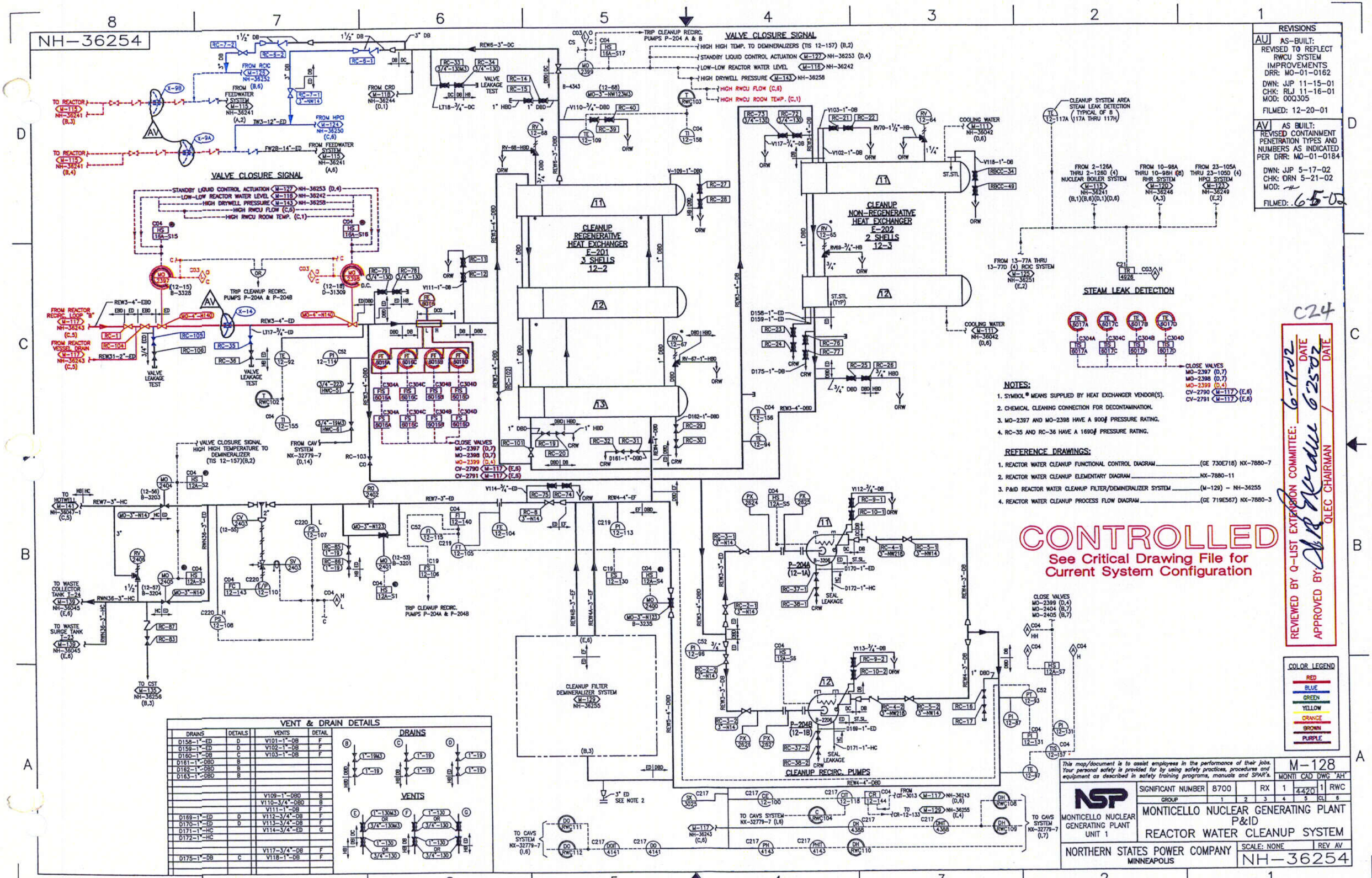

VENT & DRAIN DETAILS

DRAINS	DETAILS	VENTS	DETAIL
D158-1"-ED	D	V101-1"-DB	F
D159-1"-ED	D	V102-1"-DB	F
D160-1"-DB	C	V103-1"-DB	F
D161-1"-DBO	B		
D162-1"-DBO	B		
D163-1"-DBO	B		
		V109-1"-DBO	B
		V110-3/4"-DBO	B
		V111-1"-DB	F
D169-1"-ED	D	V112-3/4"-DB	F
D170-1"-ED	D	V113-3/4"-DB	F
D171-1"-HC		V114-3/4"-ED	G
D172-1"-HC			
		V117-3/4"-DB	F
D175-1"-DB	C	V118-1"-DB	F

DRAINS

VENTS

REVISIONS

AU AS-BUILT: REVISED TO REFLECT RWCU SYSTEM IMPROVEMENTS DRR: MO-01-0162 DWN: JJP 11-15-01 CHK: RLJ 11-16-01 MOD: 00Q305 FILMED: 12-20-01

AV AS BUILT: REVISED CONTAINMENT PENETRATION TYPES AND NUMBERS AS INDICATED PER DRR: MO-01-0184 DWN: JJP 5-17-02 CHK: DRN 5-21-02 MOD: # FILMED: 6-5-02

C24

REVIEWED BY Q-LIST EXTENSION COMMITTEE: 6-17-02 DATE
APPROVED BY QLEC CHAIRMAN 6-25-02 DATE

NOTES:

1. SYMBOL ® MEANS SUPPLIED BY HEAT EXCHANGER VENDOR(S).
2. CHEMICAL CLEANING CONNECTION FOR DECONTAMINATION.
3. MO-2397 AND MO-2398 HAVE A 900# PRESSURE RATING.
4. RC-35 AND RC-36 HAVE A 1690# PRESSURE RATING.

REFERENCE DRAWINGS:

1. REACTOR WATER CLEANUP FUNCTIONAL CONTROL DIAGRAM ____ (GE 730E718) NX-7880-7
2. REACTOR WATER CLEANUP ELEMENTARY DIAGRAM ____ NX-7880-11
3. P&ID REACTOR WATER CLEANUP FILTER/DEMINERALIZER SYSTEM ____ (M-129) - NH-36255
4. REACTOR WATER CLEANUP PROCESS FLOW DIAGRAM ____ (GE 719E567) NX-7880-3

CONTROLLED
See Critical Drawing File for Current System Configuration

COLOR LEGEND
RED
BLUE
GREEN
YELLOW
ORANGE
BROWN
PURPLE

This map/document is to assist employees in the performance of their jobs. Your personal safety is provided for by using safety practices, procedures and equipment as described in safety training programs, manuals and SPAR's.

M-128

MONTI	CAD	DWG	'AH'
1	4420	1	RWC

SIGNIFICANT NUMBER	8700		RX	1		
GROUP	1	2	3	4	5	CL 6

NSP
MONTICELLO NUCLEAR GENERATING PLANT UNIT 1

MONTICELLO NUCLEAR GENERATING PLANT
P&ID
REACTOR WATER CLEANUP SYSTEM

NORTHERN STATES POWER COMPANY
MINNEAPOLIS

SCALE: NONE | REV AV
NH-36254

NH-46162

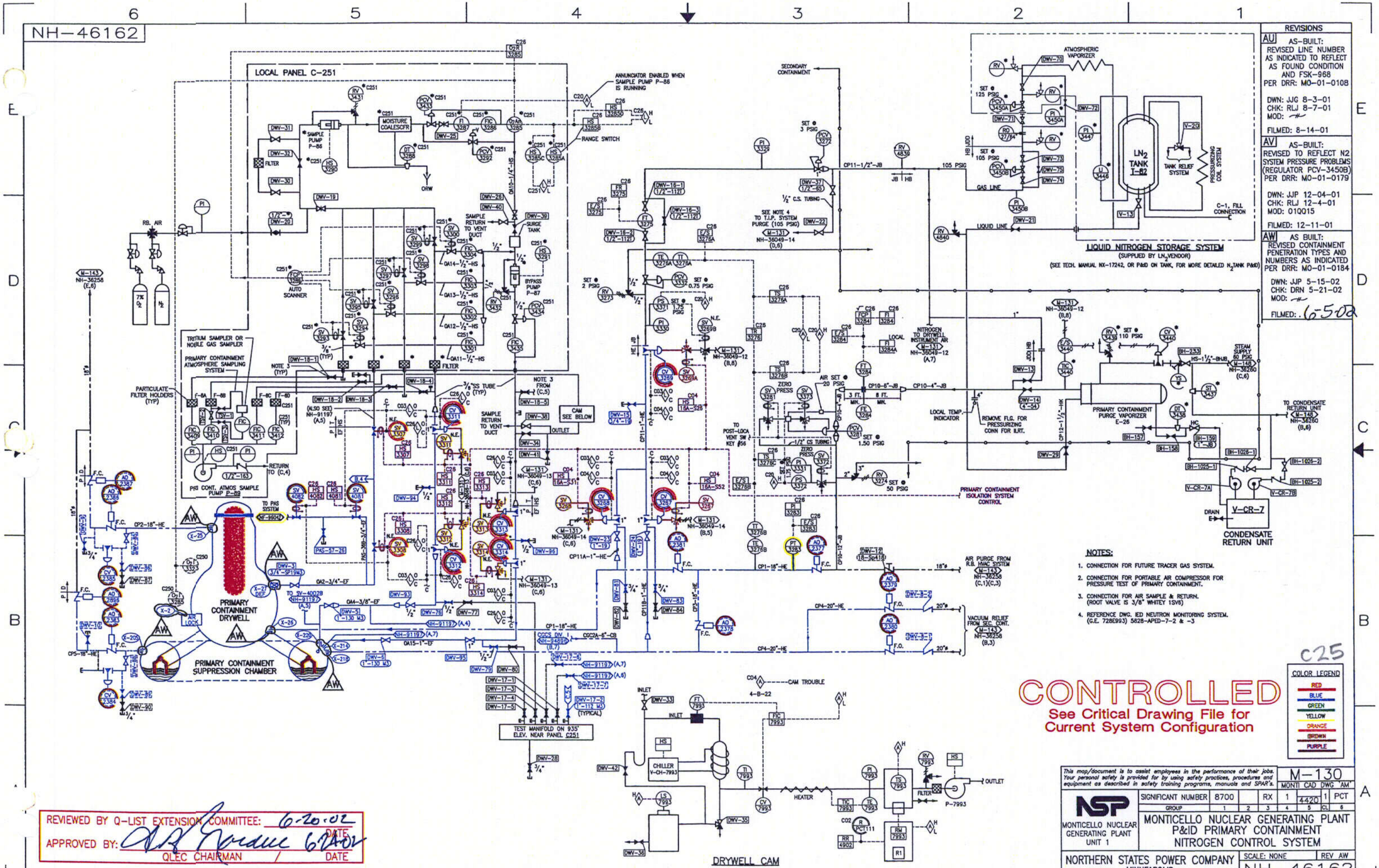

REVISIONS

AU AS-BUILT:
REVISED LINE NUMBER AS INDICATED TO REFLECT AS FOUND CONDITION AND FSK-968
PER DRR: MO-01-0108

DWN: JJG 8-3-01
CHK: RLJ 8-7-01
MOD: —
FILMED: 8-14-01

AV AS-BUILT:
REVISED TO REFLECT N2 SYSTEM PRESSURE PROBLEMS (REGULATOR PCV-3450B)
PER DRR: MO-01-0179

DWN: JJP 12-04-01
CHK: RLJ 12-4-01
MOD: 01Q015
FILMED: 12-11-01

AW AS BUILT:
REVISED CONTAINMENT PENETRATION TYPES AND NUMBERS AS INDICATED
PER DRR: MO-01-0184

DWN: JJP 5-15-02
CHK: DRN 5-21-02
MOD: —
FILMED: 6-5-02

NOTES:

1. CONNECTION FOR FUTURE TRACER GAS SYSTEM.
2. CONNECTION FOR PORTABLE AIR COMPRESSOR FOR PRESSURE TEST OF PRIMARY CONTAINMENT.
3. CONNECTION FOR AIR SAMPLE & RETURN. (ROOT VALVE IS 3/8" WHITEY 1SV6)
4. REFERENCE DWG. IED NEUTRON MONITORING SYSTEM. (G.E. 728E993) 5828-APED-7-2 & -3

C25

CONTROLLED
See Critical Drawing File for Current System Configuration

COLOR LEGEND: RED, BLUE, GREEN, YELLOW, ORANGE, BROWN, PURPLE

REVIEWED BY Q-LIST EXTENSION COMMITTEE: 6-20-02 DATE
APPROVED BY: [signature] 6-24-02
QLEC CHAIRMAN / DATE

This map/document is to assist employees in the performance of their jobs. Your personal safety is provided for by using safety practices, procedures and equipment as described in safety training programs, manuals and SPAR's.

M-130

SIGNIFICANT NUMBER	8700		RX	1	4420	1	PCT
GROUP	1	2	3	4	5	CL	6

MONTICELLO NUCLEAR GENERATING PLANT UNIT 1

MONTICELLO NUCLEAR GENERATING PLANT
P&ID PRIMARY CONTAINMENT
NITROGEN CONTROL SYSTEM

NORTHERN STATES POWER COMPANY
MINNEAPOLIS

SCALE: NONE | REV AW
NH-46162

NH-36049-4

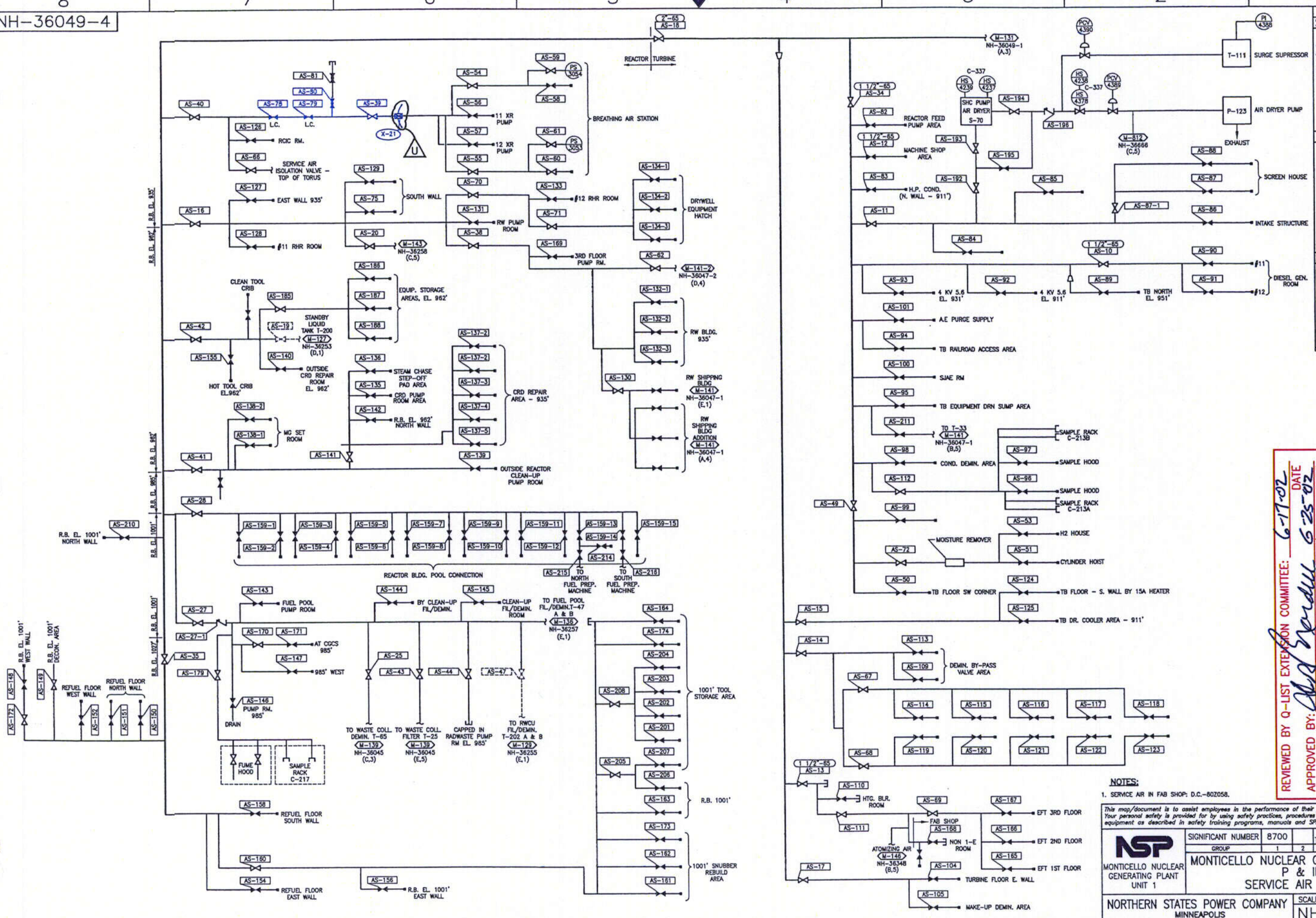

NOTES:

1. SERVICE AIR IN FAB SHOP: D.C.-80Z058.

REVISIONS

S AS BUILT: REVISED TO REFLECT AS FOUND CONDITION IN ACCORDANCE WITH SRI 92-025 SHOW VALVE AS-211 & REVISE ZONE COORDINATE PER DRR: MO-97-0028
DWN: RHH 2-17-97
CHK: WFZ 2-18-97
MOD:
FILMED: 3-4-97

T AS BUILT: REVISED TO REFLECT AS FOUND CONDITION IN ACCORDANCE WITH SRI 92-025, ADDED VALVES AS-214, AS-215 AND AS-216 PER DRR: MO-98-0012
DWN: RHH 1-27-98
CHK: WFZ 1-28-98
MOD:
FILMED: 2-6-98

U AS BUILT: REVISED CONTAINMENT PENETRATION TYPES AND NUMBERS AS INDICATED PER DRR: MO-01-0184
DWN: JJP 5-17-02
CHK: DRN 5-21-02
MOD:
FILMED: 6-5-02

REVIEWED BY Q-LIST EXTENSION COMMITTEE: 6-17-02 DATE
APPROVED BY: 6-25-02 DATE
QLEC CHAIRMAN

CONTROLLED
See Critical Drawing File for Current System Configuration

C26

COLOR LEGEND
RED
BLUE
GREEN
YELLOW
ORANGE
BROWN
PURPLE

This map/document is to assist employees in the performance of their jobs. Your personal safety is provided for by using safety practices, procedures and equipment as described in safety training programs, manuals and SPAR's.

NSP
MONTICELLO NUCLEAR GENERATING PLANT UNIT 1

SIGNIFICANT NUMBER	8700		RX TURB	1	4410	1	AIR MUD
GROUP	1	2	3	4	5	CL	6

M-131
MONTI CAD DWG 'N'

MONTICELLO NUCLEAR GENERATING PLANT
P & ID
SERVICE AIR SYSTEM

NORTHERN STATES POWER COMPANY
MINNEAPOLIS

SCALE: NONE
REV U
NH-36049-4

NH-36049-10

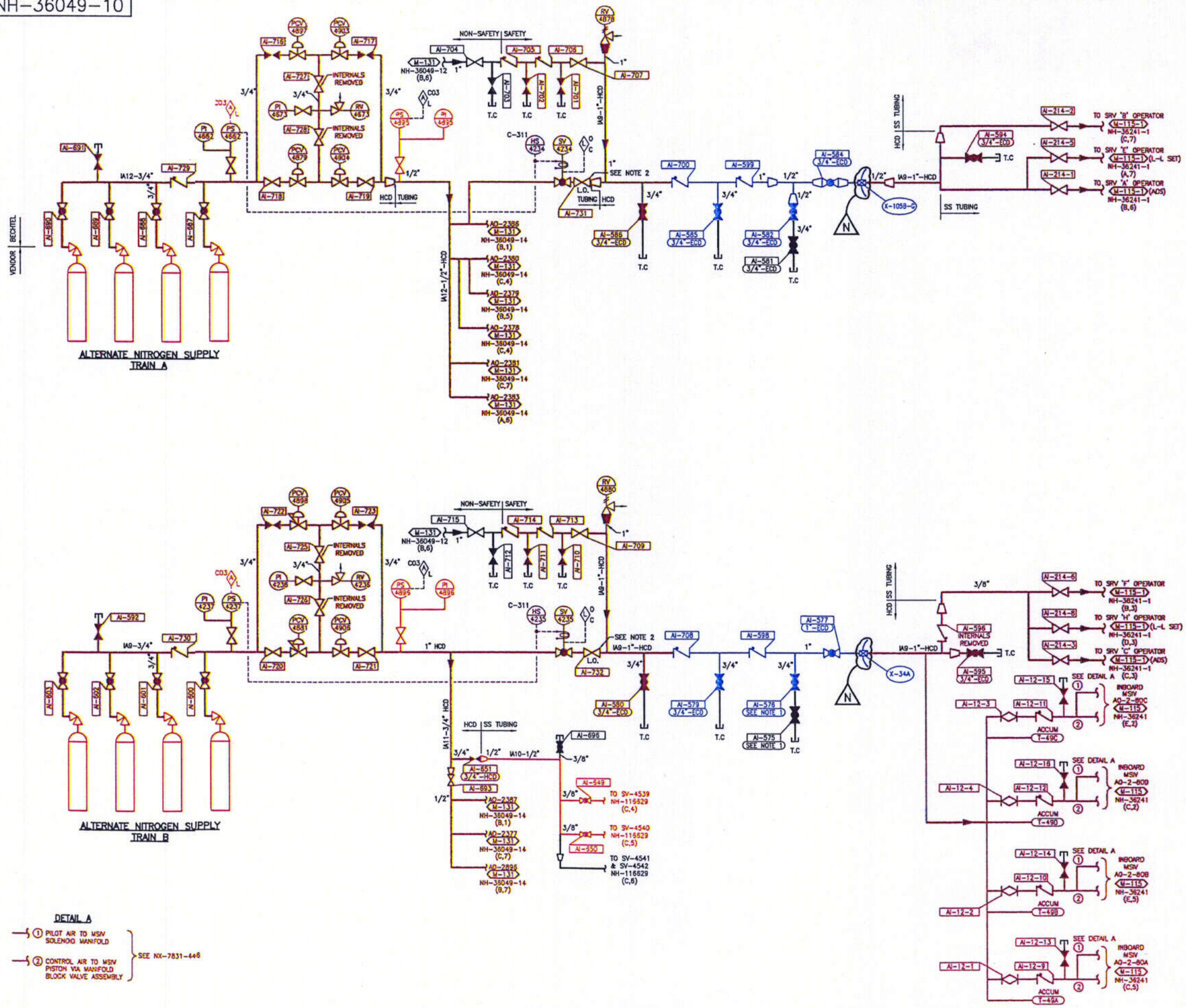

NOTE:

1. VALVE BODY MATERIAL FOR VALVES AI-575 AND AI-576 IS ASME SA182 F316 SS
2. VALVES AI-731 AND AI-732 LOCKED OPEN PER SRI 96-003.

COLOR LEGEND: RED, BLUE, GREEN, YELLOW, ORANGE, BROWN, PURPLE

REVISIONS

L — AS-BUILT: REVISED TO REFLECT THE ADDITION OF LOCKED OPEN DESIGNATION TO VALVES AI-731 AND AI-732 IN ACCORDANCE WITH SRI 96-003 PER DRR: MO-98-0202
DWN: RHH 12-15-98
CHK: JP 12-16-98
MOD:
FILMED: 1-19-99

M — AS-BUILT: REVISED TO REFLECT THE ADDITION OF MORE DETAILED INFORMATION AND CORRECTED ERRORS PER DRR: MO-00-0206
DWN: JJP 10-12-00
CHK: NRF 10-19-00
MOD: 93Q305 (C)
FILMED: 11-06-00

N — AS BUILT: REVISED CONTAINMENT PENETRATION TYPES AND NUMBERS AS INDICATED PER DRR: MO-01-0184
DWN: JJP 5-17-02
CHK: DRN 5-21-02
MOD:
FILMED: 6-5-02

CONTROLLED
See Critical Drawing File for Current System Configuration
REVIEWED BY Q-LIST EXTENSION COMMITTEE: 6-17-02 DATE
APPROVED BY: 6-25-02 DATE
QLEC CHAIRMAN

C27

This map/document is to assist employees in the performance of their jobs. Your personal safety is provided for by using safety practices, procedures and equipment as described in safety training programs, manuals and SPAR's.

M-131

SIGNIFICANT NUMBER	8700		RX	1	4420	1	PCT
GROUP	1	2	3	4	5	CL	6

MONTI CAD DWG "E"

NSP — MONTICELLO NUCLEAR GENERATING PLANT UNIT 1

MONTICELLO NUCLEAR GENERATING PLANT P&ID ALTERNATE NITROGEN SUPPLY SYSTEM

NORTHERN STATES POWER COMPANY MINNEAPOLIS

SCALE: NONE | REV N

NH-36049-10

NH-36049-12

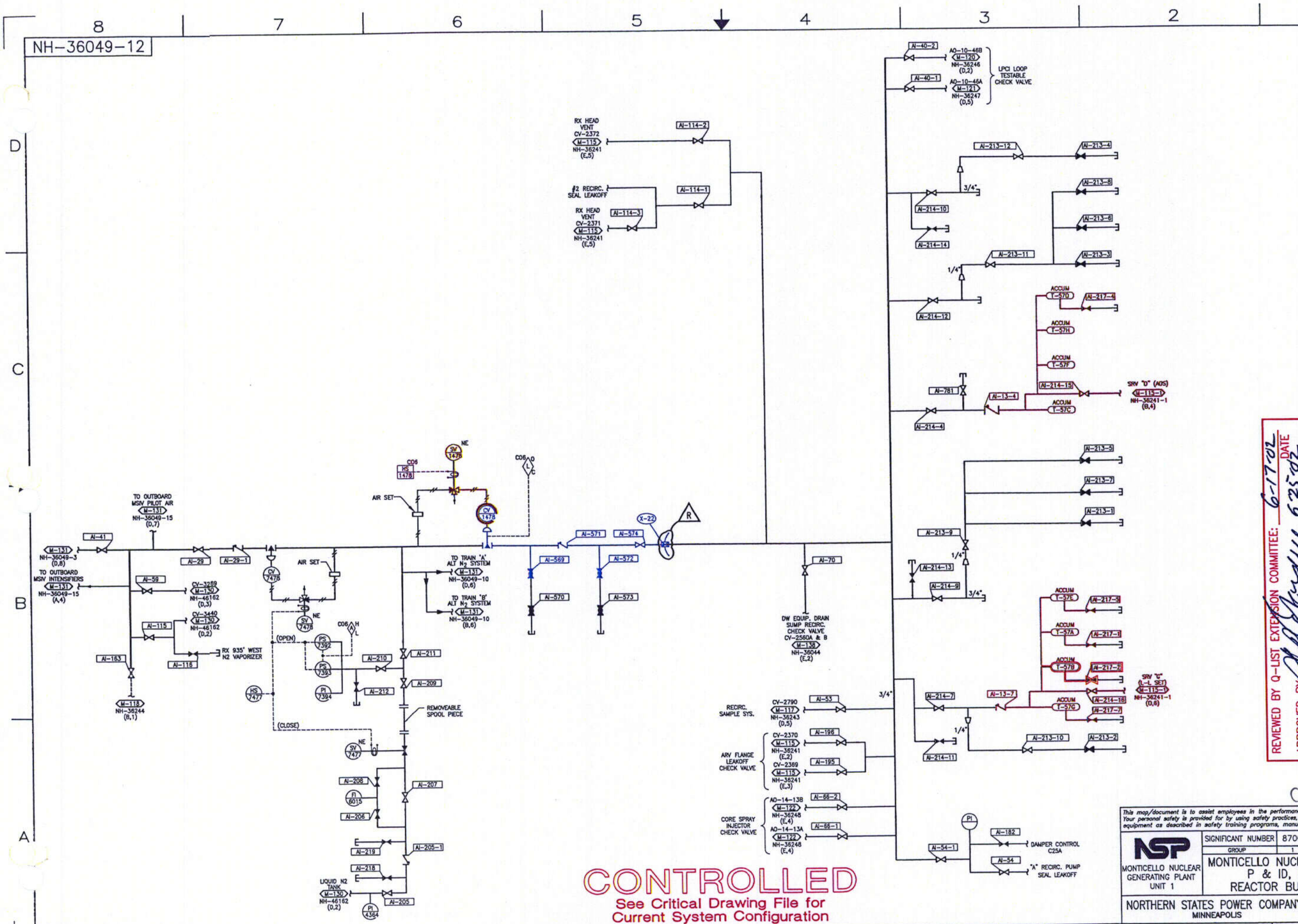

CONTROLLED
See Critical Drawing File for Current System Configuration

REVISIONS

L AS-BUILT: REVISED TO REFLECT REMOVAL OF LOCKED OPEN AND LOCKED CLOSED DESIGNATION IN ACCORDANCE WITH SRI 96-003 PER DRR: MO-96-053
DWN: RHH 4-4-96
CHK: PEB 4-13-96
MOD: —
FILMED: 4-22-96

M AS-BUILT: REVISED TO REFLECT THE INSTRUMENT SERVICE AIR SYSTEM IMPROVEMENTS MOD. PER DRR: MO-96-078
DWN: RHH 4-29-96
CHK: PEB 4-30-96
MOD: 95Q025
FILMED: 5-17-96

N AS-BUILT: REVISED TO REFLECT AS FOUND CONDITION IN ACCORDANCE WITH SRI 92-025, ADDED VALVE TAGS TO AI-29-1 AND AI-205-1 PER DRR: MO-98-0004
DWN: RHH 1-19-98
CHK: WFZ 1-21-98
MOD: —
FILMED: 1-28-98

P AS-BUILT: REVISED TO REFLECT AS FOUND CONDITION IN ACCORDANCE WITH SRI 92-025, ADDED INSTRUMENT No. FI-6015 AND EXISTING HS-7477 PER DRR: MO-99-0054
DWN: RHH 3-30-99
CHK: PBY 3-30-99
MOD: —
FILMED: 4-6-99

Q AS-BUILT: REVISED TO REFLECT REMOVE REFERENCES TO THE SRV BELLOWS LEAK DETECTION TEST EQUIPMENT PER DRR: MO-01-0161
DWN: JJP 11-14-01
CHK: RG 11-27-01
MOD: 01Q050
FILMED: 11-30-01

R AS BUILT: REVISED CONTAINMENT PENETRATION TYPES AND NUMBERS AS INDICATED PER DRR: MO-01-0184
DWN: JJP 5-15-02
CHK: DRN 5-21-02
MOD: —
FILMED: 6-5-02

REVIEWED BY Q-LIST EXTENSION COMMITTEE: 6-17-02 DATE
APPROVED BY [signature] 6-25-02 DATE
QLEC CHAIRMAN

COLOR LEGEND
RED
BLUE
GREEN
YELLOW
ORANGE
BROWN
PURPLE

C28

This map/document is to assist employees in the performance of their jobs. Your personal safety is provided for by using safety practices, procedures and equipment as described in safety training programs, manuals and SPAR's.

NSP
MONTICELLO NUCLEAR GENERATING PLANT UNIT 1

SIGNIFICANT NUMBER	8700	--	RX	-	--	1	AIR
GROUP	1	2	3	4	5	CL	6

M-131
MONTI CAD DWG 'C'
4420

MONTICELLO NUCLEAR GENERATING PLANT
P & ID, INSTRUMENT AIR
REACTOR BUILDING & DRYWELL

NORTHERN STATES POWER COMPANY
MINNEAPOLIS

SCALE: NONE
REV R
NH-36049-12

NH-36049-14

REVIEWED BY Q-LIST EXTENSION COMMITTEE: 4-24-00 DATE

APPROVED BY: D R Nordell 4-26-00 DATE
QLEC CHAIRMAN

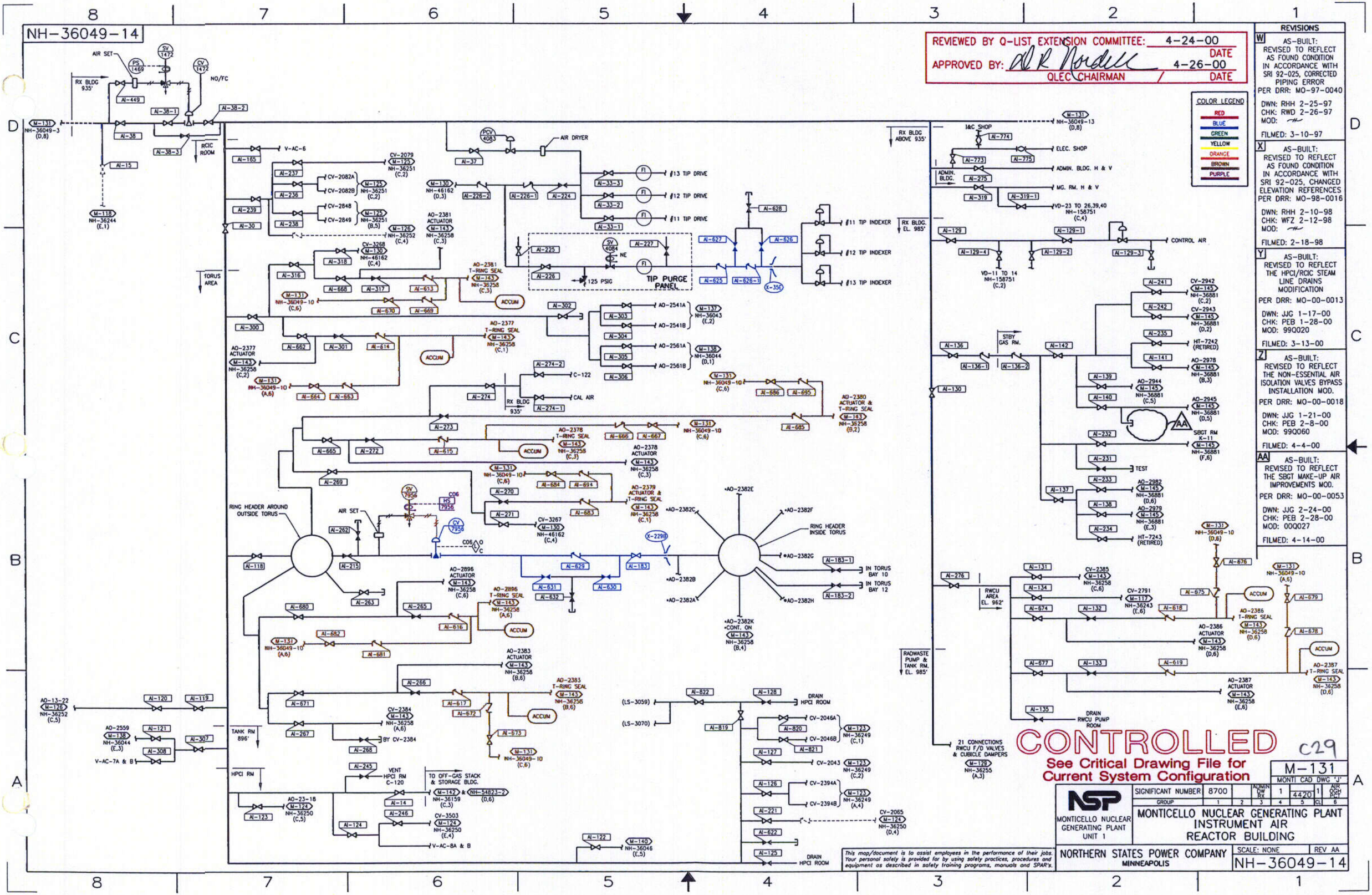

COLOR LEGEND
RED
BLUE
GREEN
YELLOW
ORANGE
BROWN
PURPLE

REVISIONS

W AS-BUILT: REVISED TO REFLECT AS FOUND CONDITION IN ACCORDANCE WITH SRI 92-025, CORRECTED PIPING ERROR
PER DRR: MO-97-0040
DWN: RHH 2-25-97
CHK: RWD 2-26-97
MOD:
FILMED: 3-10-97

X AS-BUILT: REVISED TO REFLECT AS FOUND CONDITION IN ACCORDANCE WITH SRI 92-025, CHANGED ELEVATION REFERENCES
PER DRR: MO-98-0016
DWN: RHH 2-10-98
CHK: WFZ 2-12-98
MOD:
FILMED: 2-18-98

Y AS-BUILT: REVISED TO REFLECT THE HPCI/RCIC STEAM LINE DRAINS MODIFICATION
PER DRR: MO-00-0013
DWN: JJG 1-17-00
CHK: PEB 1-28-00
MOD: 99Q020
FILMED: 3-13-00

Z AS-BUILT: REVISED TO REFLECT THE NON-ESSENTIAL AIR ISOLATION VALVES BYPASS INSTALLATION MOD.
PER DRR: MO-00-0018
DWN: JJG 1-21-00
CHK: PEB 2-8-00
MOD: 99Q060
FILMED: 4-4-00

AA AS-BUILT: REVISED TO REFLECT THE SBGT MAKE-UP AIR IMPROVEMENTS MOD.
PER DRR: MO-00-0053
DWN: JJG 2-24-00
CHK: PEB 2-28-00
MOD: 00Q027
FILMED: 4-14-00

CONTROLLED
See Critical Drawing File for Current System Configuration

C29

M-131

MONTI CAD DWG 'J'			
SIGNIFICANT NUMBER	8700	1	4420
GROUP	1	2	3
ADMIN DW RX	1	4	5
CL	6		

NSP
MONTICELLO NUCLEAR GENERATING PLANT UNIT 1

MONTICELLO NUCLEAR GENERATING PLANT
INSTRUMENT AIR
REACTOR BUILDING

NORTHERN STATES POWER COMPANY
MINNEAPOLIS

SCALE: NONE REV AA
NH-36049-14

This map/document is to assist employees in the performance of their jobs. Your personal safety is provided for by using safety practices, procedures and equipment as described in safety training programs, manuals and SPAR's.

NH-36051

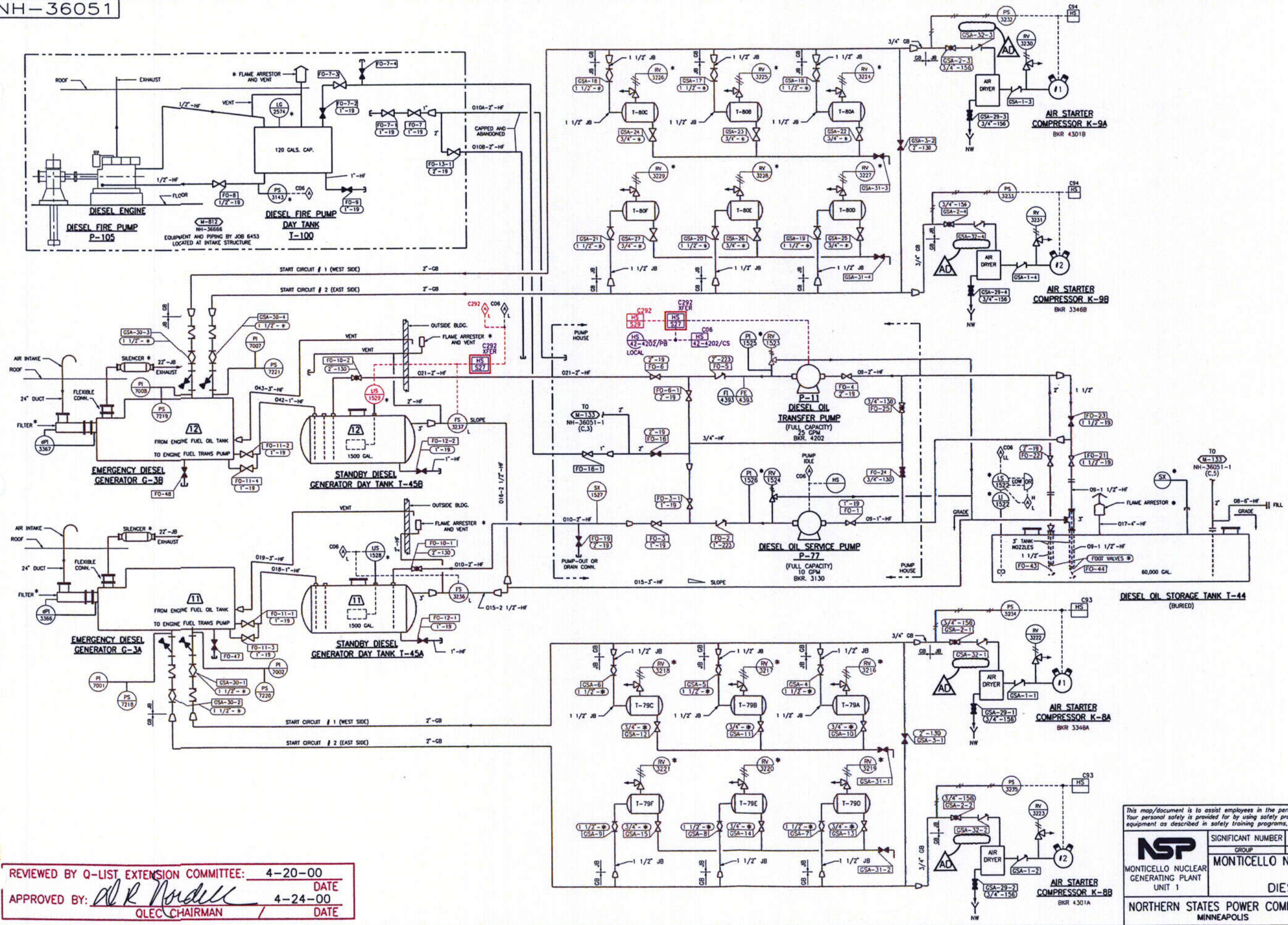

REVISIONS

AA AS BUILT
REVISED TO REFLECT ADDED HAND SWITCH NUMBERS CONSISTANT WITH CHAMPS/CML
PER DRR: MO-95-286
DWN: RHH 11-7-95
CHK: RCM 11-29-95
MOD:
FILMED: 12-12-95

AB AS-BUILT:
REVISED TO REFLECT REMOVAL OF LOCKED OPEN AND LOCKED CLOSED DESIGNATION IN ACCORDANCE WITH SRI 96-003
PER DRR: MO-96-053
DWN: RHH 4-4-96
CHK: PEB 4-13-96
MOD:
FILMED: 4-22-96

AC AS-BUILT:
REVISED TO REFLECT AS FOUND CONDITION IN ACCORDANCE WITH SRI 92-025, CORRECTED FO-16 TO INDICATE NORMALLY CLOSED POSITION
PER DRR: MO-98-0006
DWN: RHH 1-21-98
CHK: LWH 1-22-98
MOD:
FILMED: 1-28-98

AD AS-BUILT:
REVISED TO REFLECT REPLACEMENT OF CHECK VALVES 65A-32-1 THROUGH -4
PER DRR: MO-00-0005
DWN: JJG 1-19-00
CHK: SQ 1-26-00
MOD: 99Q035
FILMED: 2-17-00

CONTROLLED
See Critical Drawing File for Current System Configuration

C30

COLOR LEGEND
RED
BLUE
GREEN
YELLOW
ORANGE
BROWN
PURPLE

This map/document is to assist employees in the performance of their jobs. Your personal safety is provided for by using safety practices, procedures and equipment as described in safety training programs, manuals and SPAR's.

M-133
MONTI CAD DWG 'U'

SIGNIFICANT NUMBER	8700		RX	1	4420	1	RCH
GROUP	1	2	3	4	5	CL	6

NSP
MONTICELLO NUCLEAR GENERATING PLANT UNIT 1

MONTICELLO NUCLEAR GENERATING PLANT
P. & I.D.
DIESEL OIL SYSTEM SHT. 1 OF 2

NORTHERN STATES POWER COMPANY
MINNEAPOLIS

SCALE: NONE REV AD
NH-36051

REVIEWED BY Q-LIST EXTENSION COMMITTEE: 4-20-00 DATE
APPROVED BY: A R Nordell 4-24-00 DATE
QLEC CHAIRMAN

NH-36256

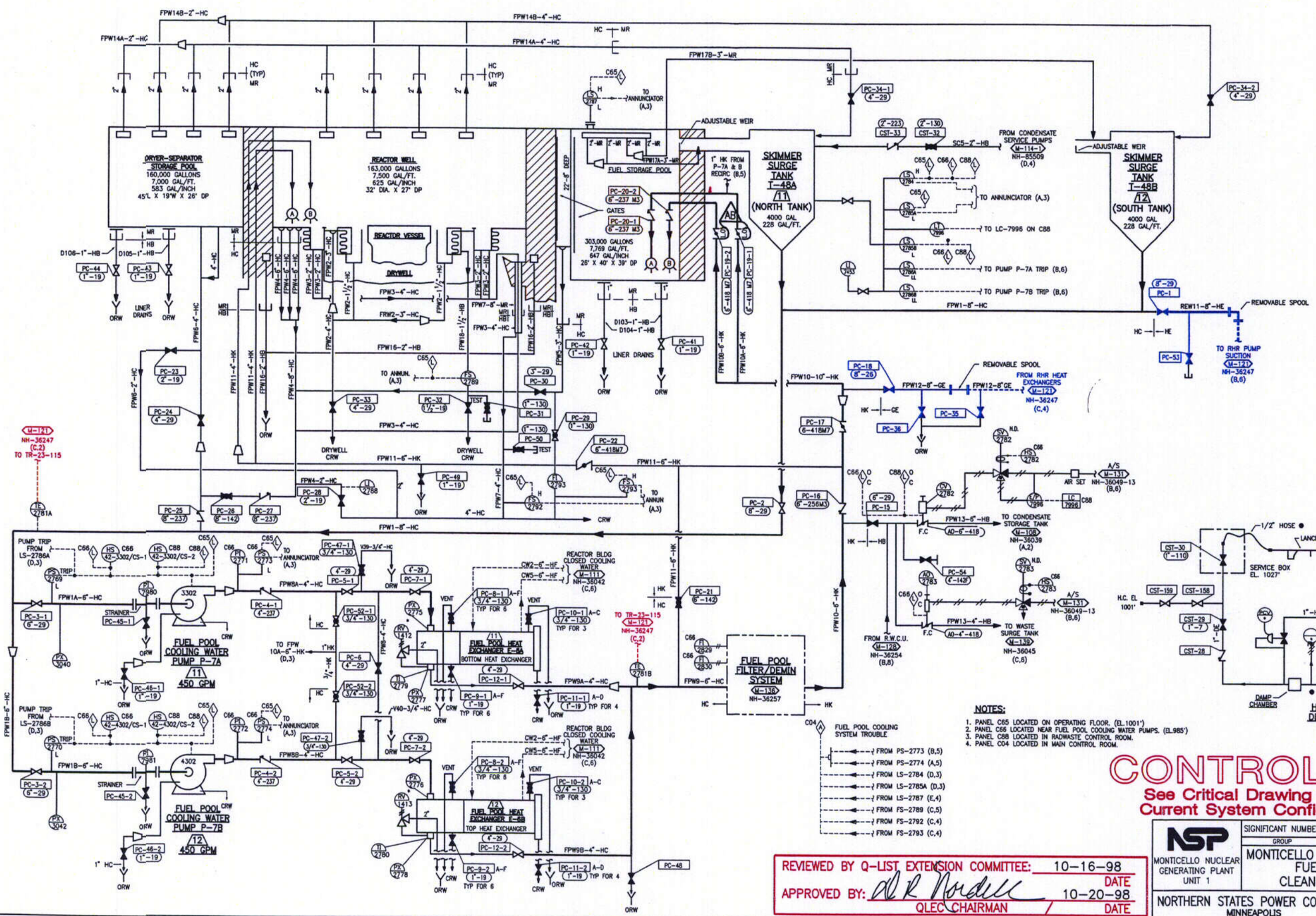

REVISIONS

Z AS-BUILT:
REVISED TO REFLECT REALIGNED FUEL POOL COOLING SYSTEM TO RHR SYSTEM SPOOL PIECE PER DRR: MO-96-0168
DWN: RHH 8-27-96
CHK: JTL 8-27-96
MOD:
FILMED: 9-4-96

AA AS-BUILT:
REVISED TO REFLECT AS FOUND CONDITION IN ACCORDANCE WITH SRI 92-025, CORRECTED PC-31 LOCATION & ADDED HS NUMBER TO COMPLY WITH CHAMPS PER DRR: MO-97-0184
DWN: RHH 11-11-97
CHK: JTL 11-12-97
MOD:
FILMED: 11-17-97

AB AS-BUILT:
REVISED TO REFLECT ADDITION OF LOCKED VALVES TO LOCKED VALVE CHECKLIST IN RESPONSE TO Q.A. FINDING FG-97-101 AND CORRECTED ERRORS IN LOCKED VALVE ANNOTATIONS PER DRR: MO-98-0153
DWN: RHH 9-15-98
CHK: JRP 9-21-98
MOD:
FILMED: 11-3-98

C31

NOTES:

1. PANEL C65 LOCATED ON OPERATING FLOOR. (EL.1001')
2. PANEL C66 LOCATED NEAR FUEL POOL COOLING WATER PUMPS. (EL.985')
3. PANEL C88 LOCATED IN RADWASTE CONTROL ROOM.
4. PANEL C04 LOCATED IN MAIN CONTROL ROOM.

COLOR LEGEND: RED, BLUE, GREEN, YELLOW, ORANGE, BROWN, PURPLE

CONTROLLED
See Critical Drawing File for Current System Configuration

REVIEWED BY Q-LIST EXTENSION COMMITTEE: 10-16-98 DATE
APPROVED BY: D R Nordell 10-20-98 DATE
QLEC CHAIRMAN

NSP — MONTICELLO NUCLEAR GENERATING PLANT UNIT 1

SIGNIFICANT NUMBER	8700		RX	1	4420	1	FPC
GROUP	1	2	3	4	5	CL	6

MONTICELLO NUCLEAR GENERATING PLANT
FUEL POOL COOLING & CLEAN-UP SYSTEM P & ID

M-135
MONTI CAD DWG 'X'

NORTHERN STATES POWER COMPANY
MINNEAPOLIS

SCALE: NONE REV AB
NH-36256

NH-36043

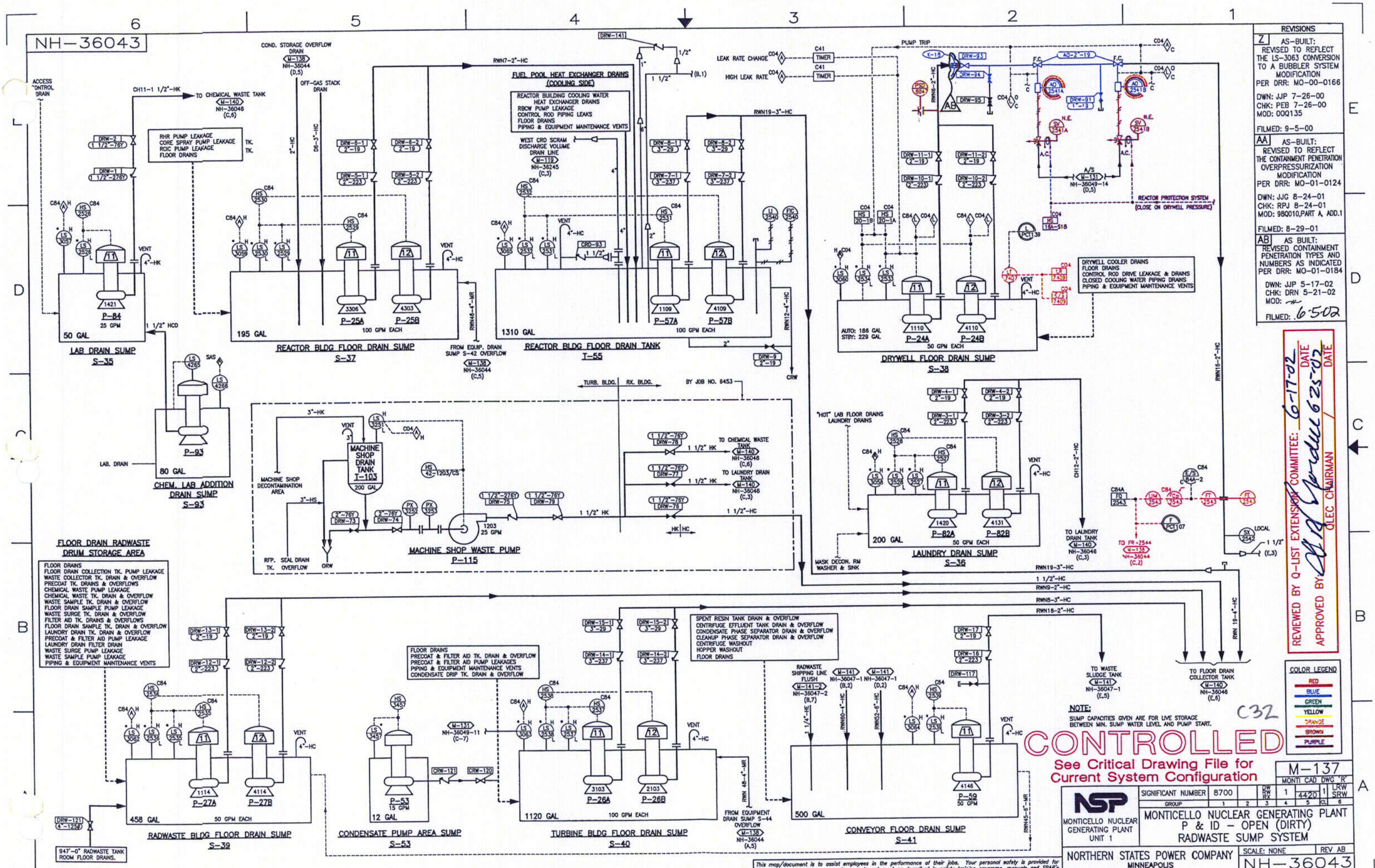

This map/document is to assist employees in the performance of their jobs. Your personal safety is provided for by using safety practices, procedures and equipment as described in safety training programs, manuals and SPAR's.

NH-36044

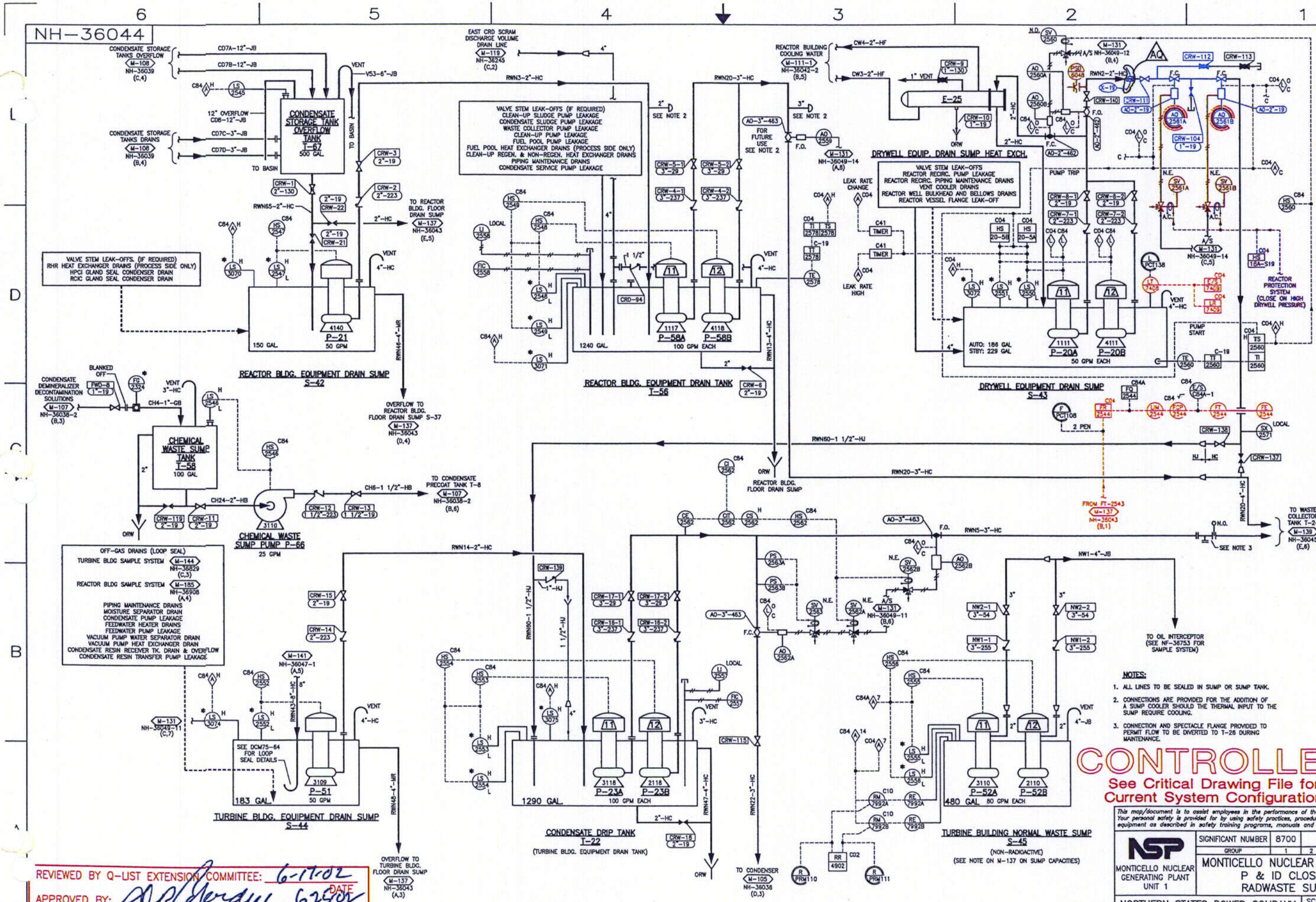

NOTES:

1. ALL LINES TO BE SEALED IN SUMP OR SUMP TANK.
2. CONNECTIONS ARE PROVIDED FOR THE ADDITION OF A SUMP COOLER SHOULD THE THERMAL INPUT TO THE SUMP REQUIRE COOLING.
3. CONNECTION AND SPECTACLE FLANGE PROVIDED TO PERMIT FLOW TO BE DIVERTED TO T-26 DURING MAINTENANCE.

C33

COLOR LEGEND: RED, BLUE, GREEN, YELLOW, ORANGE, BROWN, PURPLE

CONTROLLED
See Critical Drawing File for Current System Configuration

REVISIONS

AK AS-BUILT: REVISED TO REFLECT THE INSTALLATION OF NEW EQUIPMENT PER DRR: MO-98-0127 DWN: JLT 7-21-98 CHK: RAH 7-27-98 MOD: 98Q010 PARTA FILMED: 9-19-98

AL AS-BUILT: REVISED TO REFLECT THE RADWASTE SYSTEM IMPROVEMENTS MOD. PER DRR: MO-99-0048 DWN: RHH 3-25-99 CHK: JCG 3-26-99 MOD: 92Q025 FILMED: 4-1-99

AM AS-BUILT: REVISED TO CORRECT DE-ENERGIZED PORT LOCATION FOR AO-2562B PER DRR: MO-99-0145 DWN: JJG 8-10-99 CHK: JCG 8-11-99 MOD: FILMED: 8-26-99

AN AS- BUILT: REVISED TO REFLECT AS FOUND CONDITION TO SHOW AIR SUPPLY TO LS-3074 & AO-1740 PER DRR: MO-99-0186 DWN: JJP 9-22-99 CHK: JCG 9-28-99 MOD: FILMED: 10-19-99

AP AS- BUILT: REVISED TO REMOVE LS-3076 ACCORDING TO W.O. 83-2398 PER DRR: MO-01-0120 DWN: JJG 8-15-01 CHK: JVD 8-17-01 MOD: 82Z012 FILMED: 8-27-01

AQ AS BUILT: REVISED CONTAINMENT PENETRATION TYPES AND NUMBERS AS INDICATED PER DRR: MO-01-0184 DWN: JJP 5-17-02 CHK: DRN 5-21-02 MOD: FILMED: 6-5-02

REVIEWED BY Q-LIST EXTENSION COMMITTEE: 6-17-02 DATE
APPROVED BY: QLEC CHAIRMAN 6-25-02 DATE

This map/document is to assist employees in the performance of their jobs. Your personal safety is provided for by using safety practices, procedures and equipment as described in safety training programs, manuals and SPAR's.

M-138

SIGNIFICANT NUMBER	8700		DW TURB	1	4420	1	LRW SRW
GROUP	1	2	3	4	5	CL	6

MONTI CAD DWG 'X'

NSP MONTICELLO NUCLEAR GENERATING PLANT UNIT 1

MONTICELLO NUCLEAR GENERATING PLANT
P & ID CLOSED (CLEAN)
RADWASTE SUMP SYSTEM

NORTHERN STATES POWER COMPANY MINNEAPOLIS

SCALE: NONE REV AQ

NH-36044

NH-36258

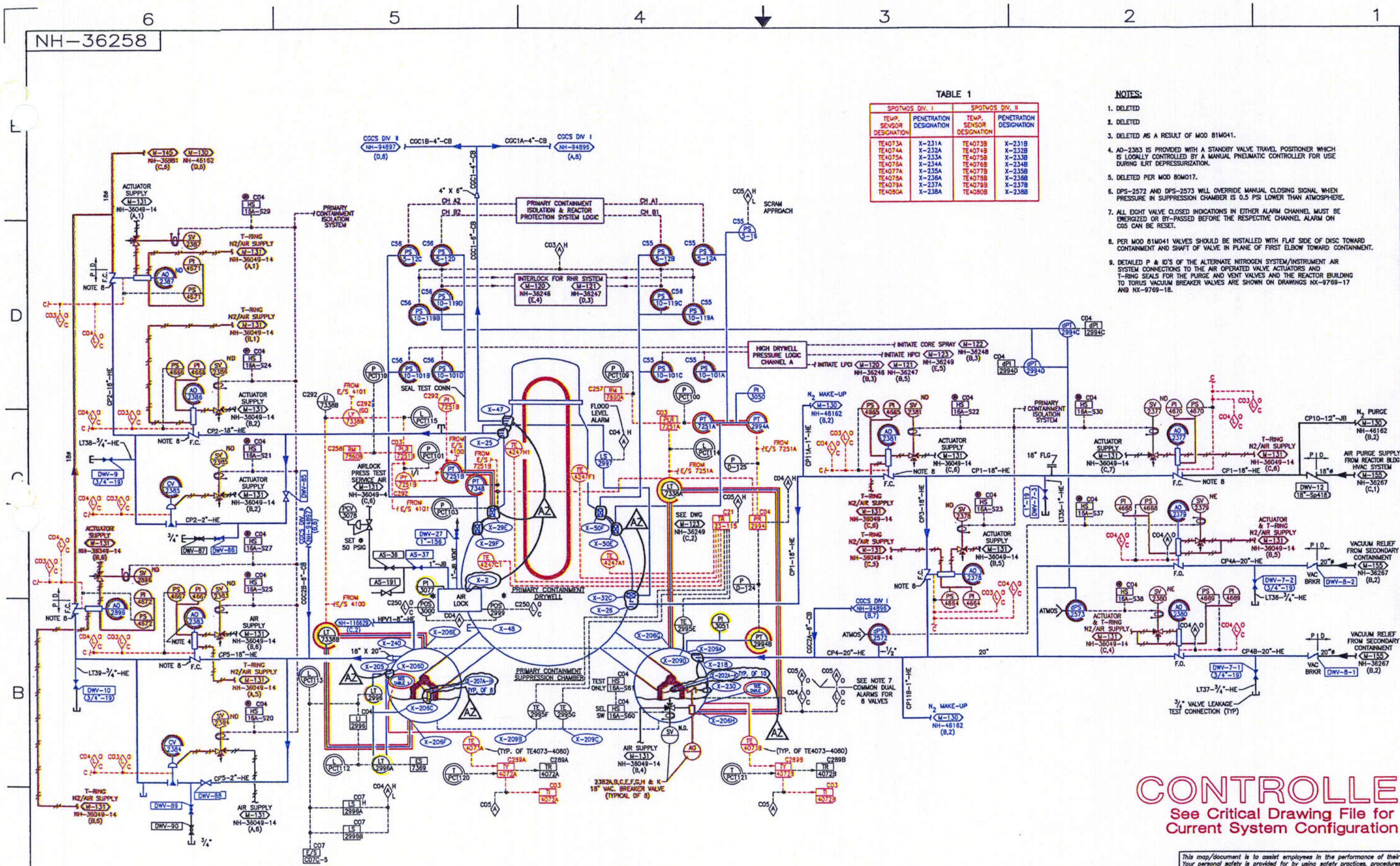

TABLE 1

SPOTWOS DIV. I		SPOTWOS DIV. II	
TEMP. SENSOR DESIGNATION	PENETRATION DESIGNATION	TEMP. SENSOR DESIGNATION	PENETRATION DESIGNATION
TE4073A	X-231A	TE4073B	X-231B
TE4074A	X-232A	TE4074B	X-232B
TE4075A	X-233A	TE4075B	X-233B
TE4076A	X-234A	TE4076B	X-234B
TE4077A	X-235A	TE4077B	X-235B
TE4078A	X-236A	TE4078B	X-236B
TE4079A	X-237A	TE4079B	X-237B
TE4080A	X-238A	TE4080B	X-238B

NOTES:

1. DELETED
2. DELETED
3. DELETED AS A RESULT OF MOD 81M041.
4. AO-2383 IS PROVIDED WITH A STANDBY VALVE TRAVEL POSITIONER WHICH IS LOCALLY CONTROLLED BY A MANUAL PNEUMATIC CONTROLLER FOR USE DURING ILRT DEPRESSURIZATION.
5. DELETED PER MOD 80M017.
6. DPS-2572 AND DPS-2573 WILL OVERRIDE MANUAL CLOSING SIGNAL WHEN PRESSURE IN SUPPRESSION CHAMBER IS 0.5 PSI LOWER THAN ATMOSPHERE.
7. ALL EIGHT VALVE CLOSED INDICATIONS IN EITHER ALARM CHANNEL MUST BE ENERGIZED OR BY-PASSED BEFORE THE RESPECTIVE CHANNEL ALARM ON C05 CAN BE RESET.
8. PER MOD 81M041 VALVES SHOULD BE INSTALLED WITH FLAT SIDE OF DISC TOWARD CONTAINMENT AND SHAFT OF VALVE IN PLANE OF FIRST ELBOW TOWARD CONTAINMENT.
9. DETAILED P & ID'S OF THE ALTERNATE NITROGEN SYSTEM/INSTRUMENT AIR SYSTEM CONNECTIONS TO THE AIR OPERATED VALVE ACTUATORS AND T-RING SEALS FOR THE PURGE AND VENT VALVES AND THE REACTOR BUILDING TO TORUS VACUUM BREAKER VALVES ARE SHOWN ON DRAWINGS NX-9769-17 AND NX-9769-18.

REVISIONS

AU AS BUILT: REVISED TO REFLECT AS FOUND CONDITION IN ACCORDANCE WITH SRI 92-025 PER DRR: MO-95-231
DWN: RHH 9-18-95
CHK: RAG 9-18-95
MOD: —
FILMED: 9-26-95

AV AS BUILT: REVISED TO REFLECT AS FOUND CONDITION IN ACCORDANCE WITH SRI 92-025 PER DRR: MO-95-270
DWN: RHH 10-10-95
CHK: RLO 10-25-95
MOD: —
FILMED: 11-2-95

AW AS-BUILT: REVISED TO REFLECT REMOVAL OF LOCKED OPEN AND LOCKED CLOSED DESIGNATION IN ACCORDANCE WITH SRI 96-003 PER DRR: MO-96-053
DWN: RHH 4-4-96
CHK: PEB 4-13-96
MOD: —
FILMED: 4-22-96

AX AS-BUILT: REVISED TO REFLECT THE REMOVAL OF PANEL C-256 FROM TSC MOD. PER DRR: MO-96-065
DWN: RHH 6-11-96
CHK: PEB 6-13-96
MOD: 95Q170
FILMED: 7-8-96

AY AS-BUILT: REVISED TO REFLECT AS FOUND CONDITION IN ACCORDANCE WITH SRI 92-025 AND FOI 91-212 PER DRR: MO-96-0176
DWN: RHH 9-25-96
CHK: RJR 9-27-96
MOD: —
FILMED: 10-8-96

AZ AS BUILT: REVISED CONTAINMENT PENETRATION TYPES AND NUMBERS AS INDICATED PER DRR: MO-01-0184
DWN: JJP 5-20-02
CHK: DRN 5-21-02
MOD: —
FILMED: 6-5-02

C34

COLOR LEGEND
RED
BLUE
GREEN
YELLOW
ORANGE
BROWN
PURPLE

CONTROLLED
See Critical Drawing File for Current System Configuration

REVIEWED BY Q-LIST EXTENSION COMMITTEE: 6-20-02 DATE
APPROVED BY: 6-27-02 QLEC CHAIRMAN / DATE

This map/document is to assist employees in the performance of their jobs. Your personal safety is provided for by using safety practices, procedures and equipment as described in safety training programs, manuals and SPAR's.

M-143

SIGNIFICANT NUMBER	8700		RX	1	4420	1	PCT
GROUP	1	2	3	4	5	CL	6

MONTI CAD DWG 'AR'

NSP MONTICELLO NUCLEAR GENERATING PLANT UNIT 1

MONTICELLO NUCLEAR GENERATING PLANT
PRIMARY CONTAINMENT & ATMOSPHERIC CONTROL SYSTEM AZ

NORTHERN STATES POWER COMPANY
MINNEAPOLIS

SCALE: NONE REV AZ
NH-36258

NH-36665

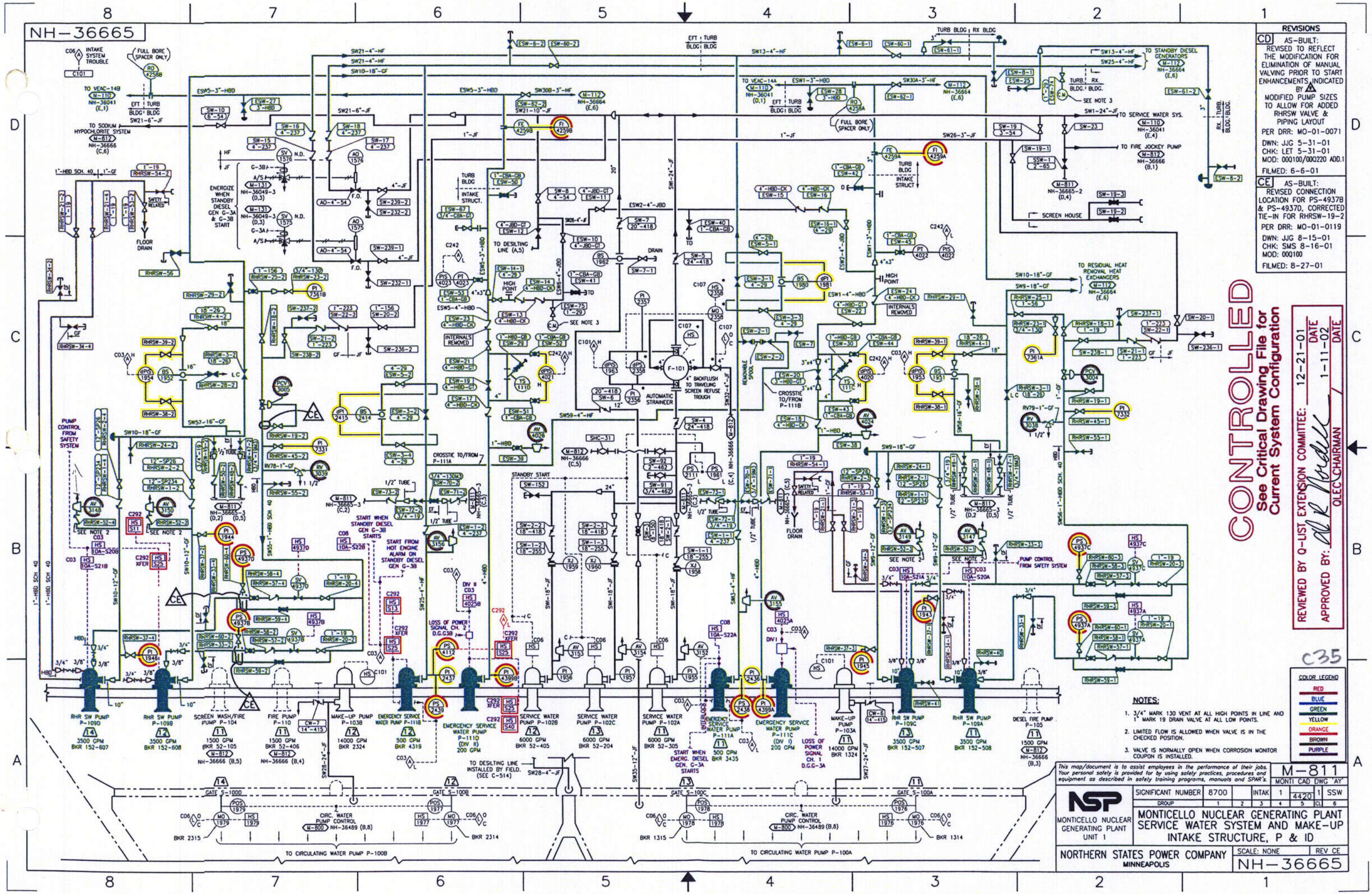
REVISIONS
CD AS-BUILT: REVISED TO REFLECT THE MODIFICATION FOR ELIMINATION OF MANUAL VALVING PRIOR TO START ENHANCEMENTS INDICATED BY △ MODIFIED PUMP SIZES TO ALLOW FOR ADDED RHRSW VALVE & PIPING LAYOUT
PER DRR: MO-01-0071
DWN: JJG 5-31-01
CHK: LET 5-31-01
MOD: 000100/000220 ADD.1
FILMED: 6-6-01
CE AS-BUILT: REVISED CONNECTION LOCATION FOR PS-4937B & PS-4937D, CORRECTED TIE-IN FOR RHRSW-19-2
PER DRR: MO-01-0119
DWN: JJG 8-15-01
CHK: SMS 8-16-01
MOD: 000100
FILMED: 8-27-01
CONTROLLED
See Critical Drawing File for Current System Configuration
REVIEWED BY Q-LIST EXTENSION COMMITTEE: 12-21-01 DATE
APPROVED BY: QLEC CHAIRMAN 1-11-02 DATE
C35
COLOR LEGEND
RED
BLUE
GREEN
YELLOW
ORANGE
BROWN
PURPLE
NOTES:
1. 3/4" MARK 130 VENT AT ALL HIGH POINTS IN LINE AND 1" MARK 19 DRAIN VALVE AT ALL LOW POINTS.
2. LIMITED FLOW IS ALLOWED WHEN VALVE IS IN THE CHECKED POSITION.
3. VALVE IS NORMALLY OPEN WHEN CORROSION MONITOR COUPON IS INSTALLED.
This map/document is to assist employees in the performance of their jobs. Your personal safety is provided for by using safety practices, procedures and equipment as described in safety training programs, manuals and SPAR's.
M-811
MONTI CAD DWG 'AY'
SIGNIFICANT NUMBER 8700 INTAK 1 4420 1 SSW
GROUP 1 2 3 4 5 CL 6
NSP
MONTICELLO NUCLEAR GENERATING PLANT UNIT 1
MONTICELLO NUCLEAR GENERATING PLANT SERVICE WATER SYSTEM AND MAKE-UP INTAKE STRUCTURE, P & ID
NORTHERN STATES POWER COMPANY MINNEAPOLIS
SCALE: NONE
REV CE
NH-36665
RHR SW PUMP P-109D
RHR SW PUMP P-109B
SCREEN WASH/FIRE PUMP P-104
FIRE PUMP P-110
MAKE-UP PUMP P-103B
EMERGENCY SERVICE WATER PUMP P-111B
EMERGENCY SERVICE WATER PUMP P-111D (DIV II) 200 GPM
SERVICE WATER PUMP P-102B
SERVICE WATER PUMP P-102C
SERVICE WATER PUMP P-102A
EMERGENCY SERVICE WATER PUMP P-111A
EMERGENCY SERVICE WATER PUMP P-111C (DIV I) 200 GPM
MAKE-UP PUMP P-103A
RHR SW PUMP P-109C
RHR SW PUMP P-109A
DIESEL FIRE PUMP P-105
TO CIRCULATING WATER PUMP P-100B
TO CIRCULATING WATER PUMP P-100A

NH-36665-2

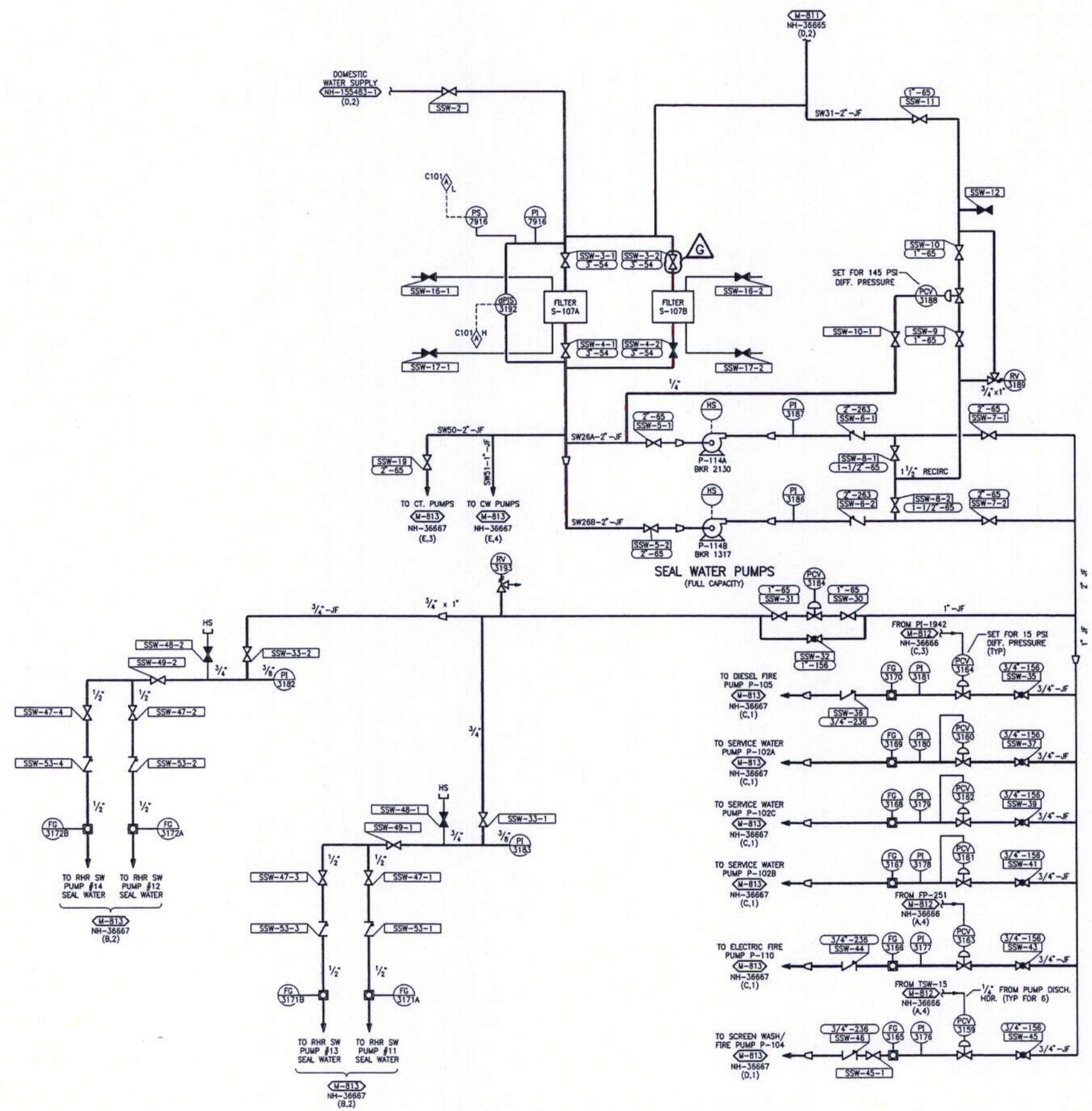

REVISIONS

C AS-BUILT:
REVISED TO CORRECT INCONSISTENT DESIGNATION OF DIFFERENTIAL PRESSURE INDICATING SWITCHES PER FOI 91-0167
PER DRR: MO-93-144
DWN: RHH 11-4-93
CHK: PEB 1-14-94
MOD:
FILMED: 1-19-94

D AS-BUILT:
REVISED TO REFLECT REMOVAL OF LOCKED OPEN AND LOCKED CLOSED DESIGNATION IN ACCORDANCE WITH SRI 96-003
PER DRR: MO-96-053
DWN: RHH 4-4-96
CHK: PEB 4-13-96
MOD:
FILMED: 4-22-96

E AS-BUILT:
REVISED TO REFLECT AS FOUND CONDITION IN ACCORDANCE WITH SRI 92-025, SHOW PI-7916 AND PS-7916, ALSO ADDED REFERENCES
PER DRR: MO-97-0160
DWN: RHH 9-24-97
CHK: TH 9-26-97
MOD:
FILMED: 9-22-97

F AS-BUILT:
REVISED TO REFLECT AS FOUND CONDITION IN ACCORDANCE WITH SRI 92-025, ADDED DWG. COORD. REF's
PER DRR: MO-98-0026
DWN: RHH 3-9-98
CHK: JGF 3-12-98
MOD:
FILMED: 3-23-98

G AS-BUILT:
REVISED TO REFLECT AS FOUND CONDITION IN ACCORDANCE WITH SRI 92-025, SHOW SSW-3-2 AS NORMALLY OPEN POSITION
PER DRR: MO-98-0096
DWN: RHH 5-19-98
CHK: JGF 12-31-98
MOD:
FILMED: 1-11-99

C36

REVIEWED BY Q-LIST EXTENSION COMMITTEE: 3-3-99 DATE
APPROVED BY: D R Nordell 3-5-99
QLEC CHAIRMAN / DATE

COLOR LEGEND
RED
BLUE
GREEN
YELLOW
ORANGE
BROWN
PURPLE

CONTROLLED
See Critical Drawing File for Current System Configuration

M-811

MONTI	CAD	DWG 'A'
1	4420	1 SSW

SIGNIFICANT NUMBER	8700		INTAK	1		1	SSW
GROUP	1	2	3	4	5	CL	6

NSP
MONTICELLO NUCLEAR GENERATING PLANT UNIT 1

MONTICELLO NUCLEAR GENERATING PLANT
SERVICE WATER SYSTEM & MAKE-UP INTAKE STRUCTURE, P & ID

NORTHERN STATES POWER COMPANY
MINNEAPOLIS

SCALE: NONE | REV G

NH-36665-2

NH-91197

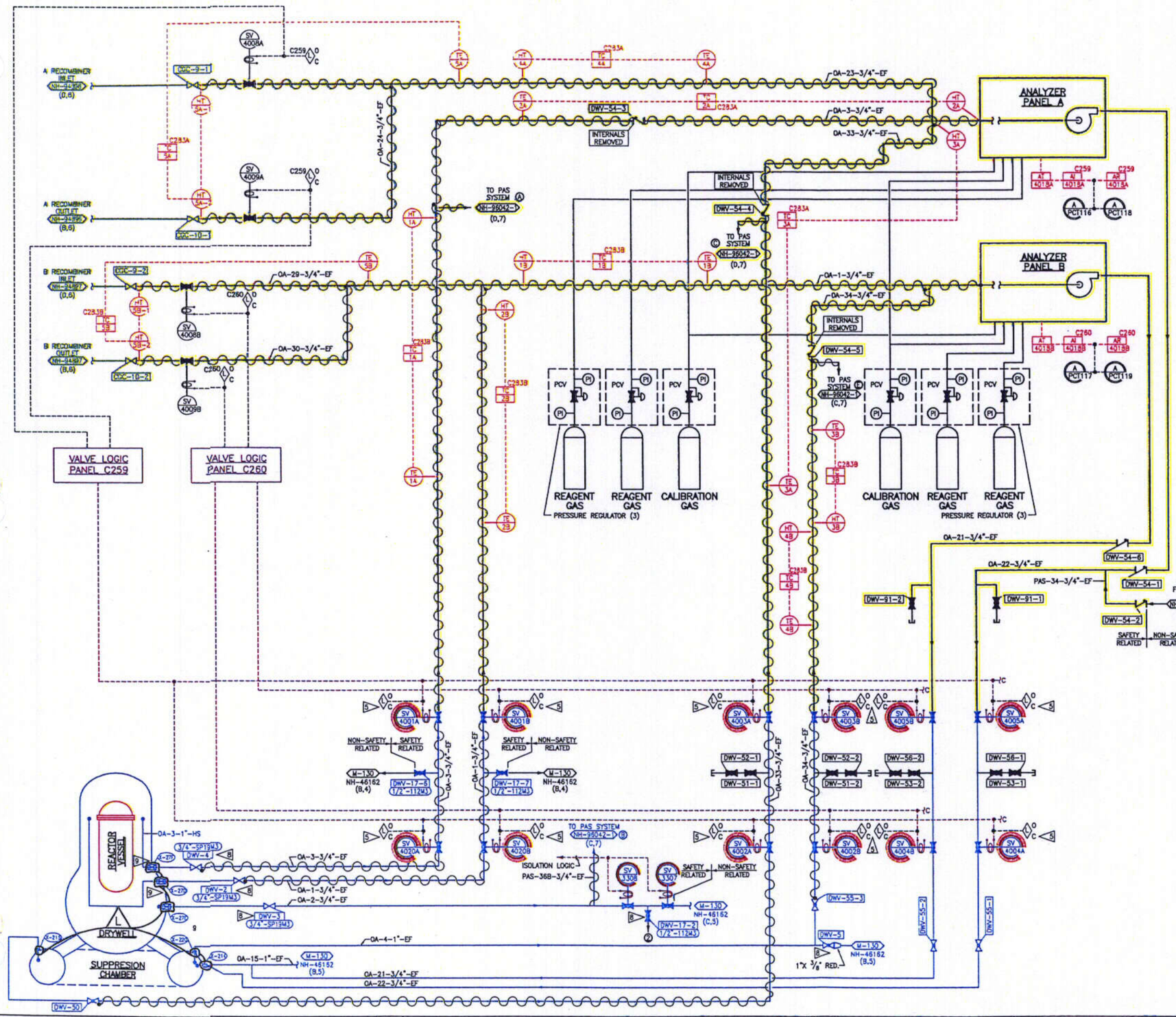

NOTES:

1. DELETED
2. HEAT TRACING IS SHOWN AS
3. DIVISION I PANEL IS C259. DIVISION II PANEL IS C260.
4. DELETED.
5. TWO SETS OF INDICATION LIGHTS EXIST FOR EACH VALVE. ONE SET IS FOR RESPECTIVE CONTROL ROOM PANEL C259 (DIV. I) OR C260 (DIV. II). THE OTHER IS FOR THE PRIMARY CONTAINMENT ISOLATION DISPLAY ON PANEL C03.
6. THE "EF" AND "HS" DESIGNATIONS ON THE LINE NUMBERS ARE FOR PIPING CLASS INFORMATION ONLY. THE DESIGN OF THE PIPING IS PER SPECIFICATION NSP-51-007.
7. TUBING BETWEEN GAS BOTTLES AND ANALYZERS IS TO BE 1/2" TUBING, 0.65" THICK.
8. EXISTING VALVE.
9. PIPING FOR PENETRATION X-27 SHOWN SEPERATELY FOR CLARITY.

REFERENCE DRAWINGS:

1. DELETED
2. POST-ACCIDENT SAMPLE SYSTEM P&ID ____ NH-96042-1
3. CONTROL ROOM PANEL DRAWING CAN SYSTEM ____ NH-91994
4. K-IV PIPING AND INSTRUMENTATION DIAGRAM (DELPHI DRAWING) ____ D1520
5. POST-LOCA COMBUSTIBLE GAS CONTROL SYSTEM P&ID ____ NH-94896 & NH-94897

REVISIONS

G AS-BUILT: REDRAWN AND REVISED TO REFLECT ZONING COORDINATE CHANGES AND REMOVED REF's TO EXISTING PIPING IN ACCORDANCE WITH N1AWI 2.4.2 PARA 6.5.24 PER DRR: MO-95-330
DWN: RHH 4-2-96
CHK: PEB 4-2-96
MOD: —
FILMED: 4-9-96

H AS-BUILT: REVISED TO REFLECT REMOVAL OF LOCKED OPEN AND LOCKED CLOSED DESIGNATION IN ACCORDANCE WITH SRI 96-003 PER DRR: MO-96-053
DWN: RHH 4-4-96
CHK: PEB 4-13-96
MOD: —
FILMED: 4-22-96

J AS BUILT: REVISED TO REFLECT THE HYDRO-OXY ANALYZER CHECK VALVES MOD. PER DRR: MO-96-0101
DWN: RHH 5-15-96
CHK: PEB 5-15-96
MOD: 96Q110
FILMED: 5-30-96

K AS-BUILT: REVISED TO CORRECT AS FOUND CONDITIONS & CROSS REFERENCES PER DRR: MO-00-0121
DWN: JJG 5-10-99
CHK: DN 5-15-00
MOD:
FILMED: 5-17-00

L AS BUILT: REVISED CONTAINMENT PENETRATION TYPES AND NUMBERS AS INDICATED PER DRR: MO-01-0184
DWN: JJP 5-17-02
CHK: DRN 5-21-02
MOD: —
FILMED: 6-5-02

REVIEWED BY Q-LIST EXTENSION COMMITTEE: 6-20-02 DATE
APPROVED BY: [signature] QLEC CHAIRMAN 6-25-02 DATE

CONTROLLED
See Critical Drawing File for Current System Configuration

C37

COLOR LEGEND: RED, BLUE, GREEN, YELLOW, ORANGE, BROWN, PURPLE

NUCLEAR SAFETY RELATED

NUTECH FILE No. 30.0451.1201

This map/document is to assist employees in the performance of their jobs. Your personal safety is provided for by using safety practices, procedures and equipment as described in safety training programs, manuals and SPAR's.

MONTI CAD DWG 'G'

SIGNIFICANT NUMBER	8700			1	4420	1	PAS
GROUP	1	2	3	4	5	CL	6

NSP MONTICELLO NUCLEAR GENERATING PLANT UNIT 1

MONTICELLO NUCLEAR GENERATING PLANT
CONTAINMENT ATMOSPHERE MONITORING SYSTEM P&ID

NORTHERN STATES POWER COMPANY MINNEAPOLIS

SCALE: NONE REV L

NH-91197

NH-94896

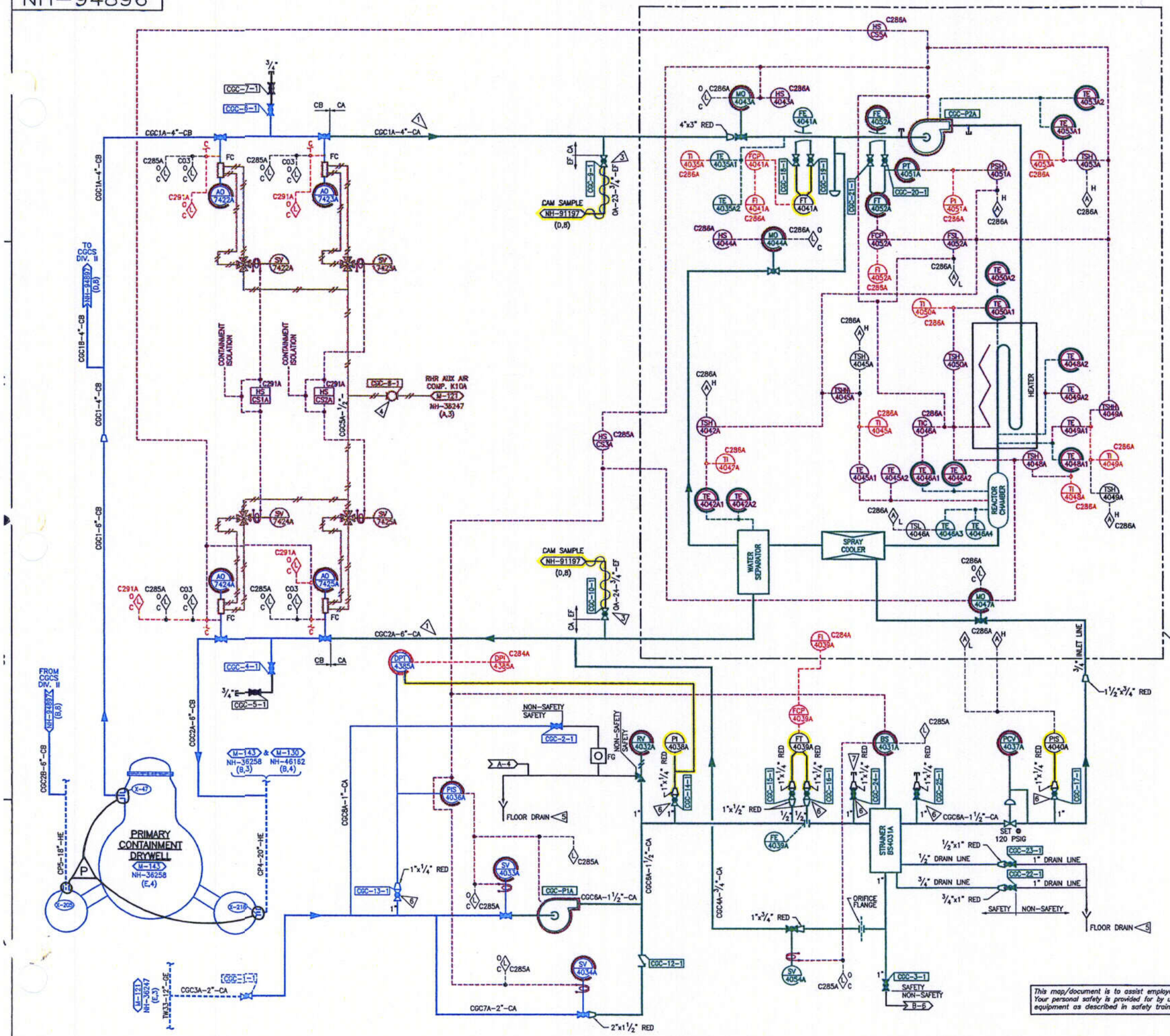

NOTES:

1. THE INLET AND OUTLET PIPING SHALL BE SUITABLY SITUATED SUCH THAT ANY CONDENSATE WHICH MAY COLLECT WILL NOT INHIBIT RECOMBINER OPERATION.
2. DELETED
3. CAM SAMPLE LINES MUST TAP TOP OF CGCS PROCESS LINES.
4. VALVE TO BE LOCATED NEAR THE RHR AUXILIARY AIR TAP.
5. DISCHARGE INTO DRAIN LOCATED UNDER THE RECOMBINER SKID.
6. ROOT VALVE TO BE LOCATED NEAR THE CONNECTION TO PROCESS LINE.
7. INSTRUMENT TO BE ADDED LATER. PLUG AT REDUCERS ADDED TO CAP OFF INSTRUMENT LINES.
8. DELETED.
9. FOR INSTALLATION OF FT 4039A AND DPT 4385A INSTRUMENT LINES, SEE DWG. NQ-119012-1.

REFERENCE DRAWINGS:

1. ROCKWELL INTERNATIONAL HYDROGEN RECOMBINER P&ID DWG N116000320.
2. CGCS SYSTEM DESIGN SPECIFICATION, NSP-63-101, (MPS-2016).
3. CGCS DIV. I ELEMENTARY DIAGRAM NF-94894-SERIES.
4. CAM SYSTEM P&ID NH-91197.

REVISIONS

K AS-BUILT: REVISED TO REFLECT REMOVAL OF LOCKED OPEN AND LOCKED CLOSED DESIGNATION IN ACCORDANCE WITH SRI 96-003 PER DRR: MO-96-053
DWN: RHH 4-4-96
CHK: PEB 4-13-96
MOD:
FILMED: 4-22-96

L AS-BUILT: REVISED TO CORRECT DRAWING REFERENCE ERRORS PER DRR: MO-97-0117
DWN: JJG 8-4-97
CHK: RLJ 8-5-97
MOD:
FILMED: 8-16-97

M AS-BUILT: DELETED NOTE 8 IN ACCORDANCE WITH SRI-96-003, REF. C/R 9800 1877 PER DRR: MO-98-0143
DWN: RHH 8-31-98
CHK: MSH 9-14-98
MOD:
FILMED: 10-26-98

N AS-BUILT: REVISED TO DELETE NOTE 2 FROM DRAWING PER DRR: MO-00-0197
DWN: JJG 9-20-00
CHK: RAA 10-17-00
MOD:
FILMED: 10-26-00

P AS BUILT: REVISED CONTAINMENT PENETRATION TYPES AND NUMBERS AS INDICATED PER DRR: MO-01-0184
DWN: JJP 5-16-02
CHK: DRN 5-21-02
MOD:
FILMED: 6-5-02

REVIEWED BY Q-LIST EXTENSION COMMITTEE: 6-17-02 DATE
APPROVED BY: [signature] 6-25-02 DATE
QLEC CHAIRMAN

C38

COLOR LEGEND: RED, BLUE, GREEN, YELLOW, ORANGE, BROWN, PURPLE

CONTROLLED
See Critical Drawing File for Current System Configuration

NUCLEAR SAFETY RELATED

This map/document is to assist employees in the performance of their jobs. Your personal safety is provided for by using safety practices, procedures and equipment as described in safety training programs, manuals and SPAR's.

NUTECH FILE No. 30.2363.0212

MONTI CAD DWG 'H'								
SIGNIFICANT NUMBER	8700		RX	1	4420	1	CGC	
GROUP	1	2	3	4	5	CL	6	

NSP
MONTICELLO NUCLEAR GENERATING PLANT UNIT 1

MONTICELLO NUCLEAR GENERATING PLANT
COMBUSTIBLE GAS CONTROL SYSTEM
DIV. I P & ID (EAST)

NORTHERN STATES POWER COMPANY
MINNEAPOLIS

SCALE: NONE | REV P
NH-94896

NH-94897

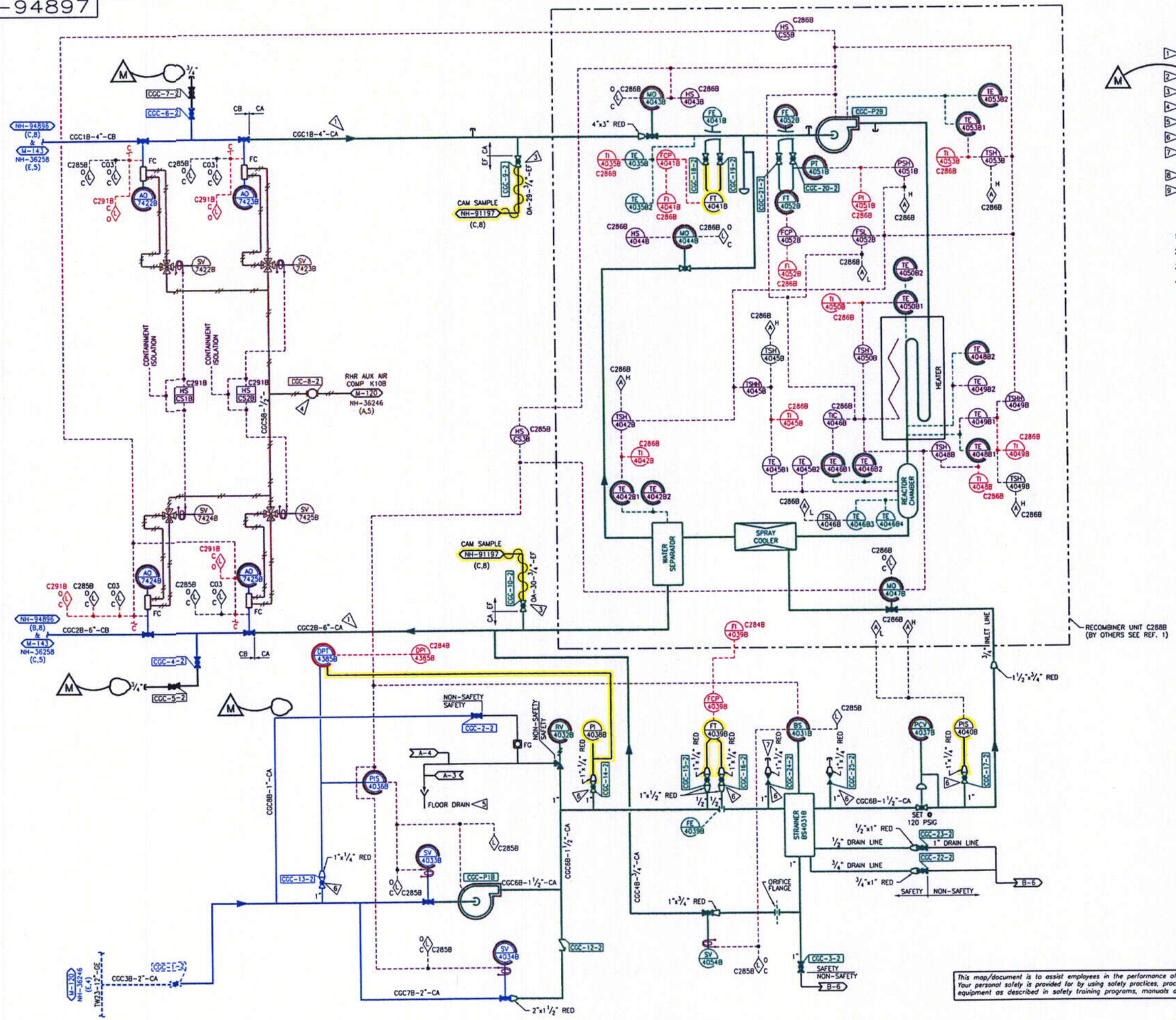

NOTES:

1. THE INLET AND OUTLET PIPING SHALL BE SUITABLY SITUATED SUCH THAT ANY CONDENSATE WHICH MAY COLLECT WILL NOT INHIBIT RECOMBINER OPERATION.
2. DELETED
3. CAM SAMPLE LINES MUST TAP TOP OF CGCS PROCESS LINES.
4. VALVE TO BE LOCATED NEAR THE RHR AUXILIARY AIR TAP.
5. DISCHARGE INTO DRAIN LOCATED UNDER THE RECOMBINER SKID.
6. ROOT VALVE TO BE LOCATED NEAR THE CONNECTION TO PROCESS LINE.
7. INSTRUMENT TO BE ADDED LATER. PLUG AT REDUCERS ADDED TO CAP OFF INSTRUMENT LINES.
8. DELETED.
9. FOR INSTALLATION OF FT 4039B AND DPT 4385B INSTRUMENT LINES, SEE DWG. NQ-119013-1.

REFERENCE DRAWINGS:

1. ROCKWELL INTERNATIONAL HYDROGEN RECOMBINER P&ID DWG N116000320.
2. CGCS SYSTEM DESIGN SPECIFICATION, NSP-63-101.
3. CGCS DIV. II ELEMENTARY DIAGRAM NF-94895-1.
4. CAM SYSTEM P&ID NH-91197.

REVISIONS

K AS-BUILT: REVISED TO REFLECT REMOVAL OF LOCKED OPEN AND LOCKED CLOSED DESIGNATION IN ACCORDANCE WITH SRI 96-003
PER DRR: MO-96-053
DWN: RHH 4-4-96
CHK: PEB 4-13-96
MOD:
FILMED: 4-22-96

L AS-BUILT: DELETED NOTE 8 IN ACCORDANCE WITH SRI-96-003, REF. C/R 9800 1877
PER DRR: MO-98-0143
DWN: RHH 8-31-98
CHK: MSH 9-14-98
MOD:
FILMED: 10-26-98

M AS-BUILT: REVISED TO REMOVE NOTE 2 FROM DRAWING
PER DRR: MO-00-0197
DWN: JJG 9-20-00
CHK: RAA 10-17-00
MOD:
FILMED: 10-26-00

REVIEWED BY Q-LIST EXTENSION COMMITTEE: 11-15-00 DATE
APPROVED BY: 11-15-00 DATE
QLEC CHAIRMAN

CONTROLLED
See Critical Drawing File for Current System Configuration

C39

COLOR LEGEND
RED
BLUE
GREEN
YELLOW
ORANGE
BROWN
PURPLE

NUCLEAR SAFETY RELATED

NUTECH FILE No. 30.2363.0213

NSP
MONTICELLO NUCLEAR GENERATING PLANT UNIT 1

SIGNIFICANT NUMBER	8700		RX	1	4420	1	CGC
GROUP	1	2	3	4	5	CL	6

MONTI CAD DWG 'H'

MONTICELLO NUCLEAR GENERATING PLANT
COMBUSTIBLE GAS CONTROL SYSTEM
DIV. II P & ID (WEST)

NORTHERN STATES POWER COMPANY
MINNEAPOLIS

SCALE: NONE
REV M
NH-94897

This map/document is to assist employees in the performance of their jobs. Your personal safety is provided for by using safety practices, procedures and equipment as described in safety training programs, manuals and SPAR's.

NH-96042-1

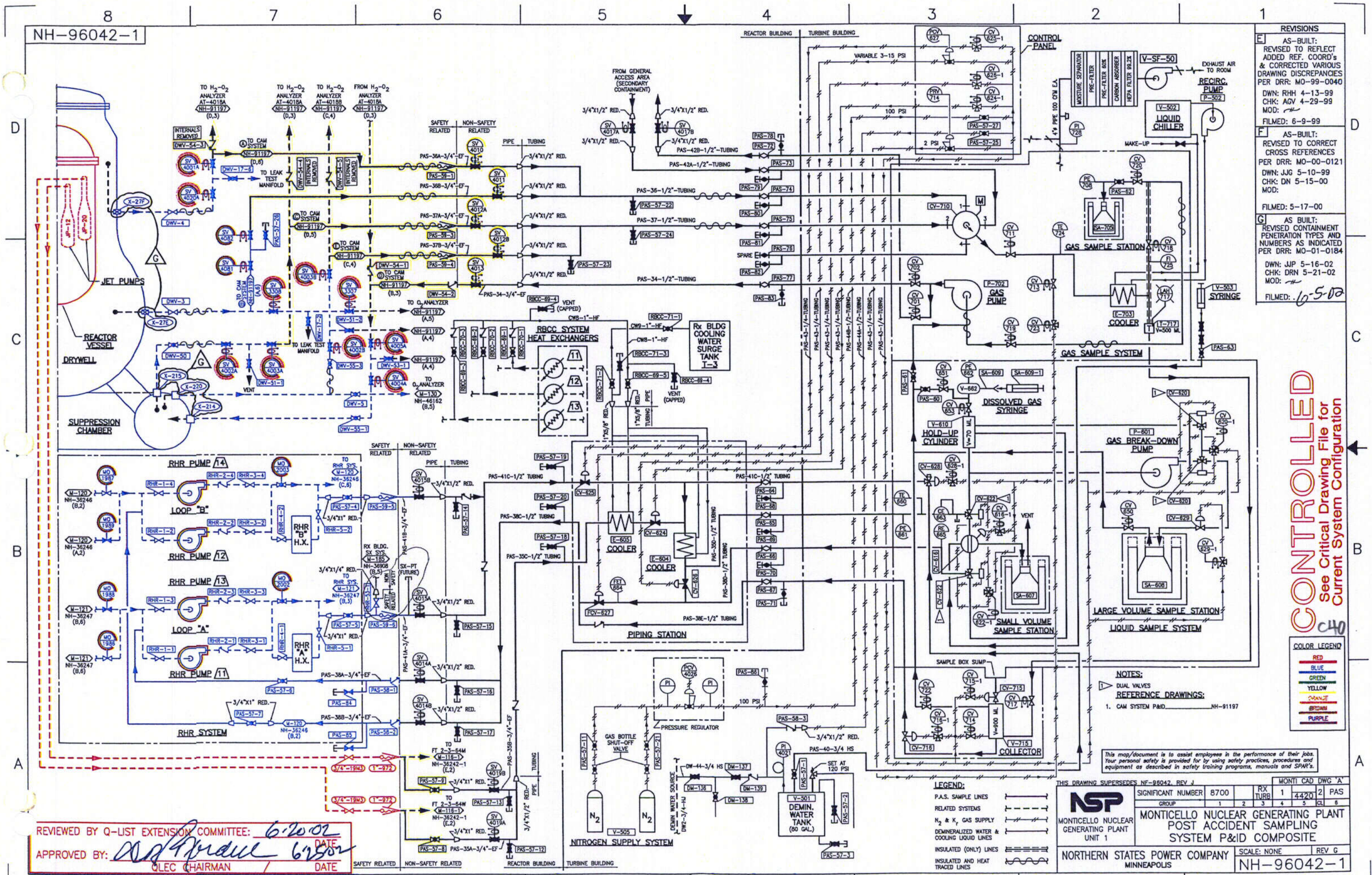

REVISIONS

E AS-BUILT: REVISED TO REFLECT ADDED REF. COORD's & CORRECTED VARIOUS DRAWING DISCREPANCIES PER DRR: MO-99-0040
DWN: RHH 4-13-99
CHK: AGV 4-29-99
MOD:
FILMED: 6-9-99

F AS-BUILT: REVISED TO CORRECT CROSS REFERENCES PER DRR: MO-00-0121
DWN: JJG 5-10-99
CHK: DN 5-15-00
MOD:
FILMED: 5-17-00

G AS BUILT: REVISED CONTAINMENT PENETRATION TYPES AND NUMBERS AS INDICATED PER DRR: MO-01-0184
DWN: JJP 5-16-02
CHK: DRN 5-21-02
MOD:
FILMED: 6-5-02

CONTROLLED
See Critical Drawing File for Current System Configuration
CHO

COLOR LEGEND
RED
BLUE
GREEN
YELLOW
ORANGE
BROWN
PURPLE

NOTES:
DUAL VALVES

REFERENCE DRAWINGS:
1. CAM SYSTEM P&ID NH-91197

LEGEND:
P.A.S. SAMPLE LINES
RELATED SYSTEMS
N_2 & K_r GAS SUPPLY
DEMINERALIZED WATER & COOLING LIQUID LINES
INSULATED (ONLY) LINES
INSULATED AND HEAT TRACED LINES

This map/document is to assist employees in the performance of their jobs. Your personal safety is provided for by using safety practices, procedures and equipment as described in safety training programs, manuals and SPAR's.

THIS DRAWING SUPERSEDES NF-96042, REV J

NSP
MONTICELLO NUCLEAR GENERATING PLANT UNIT 1

SIGNIFICANT NUMBER	8700		RX TURB	1	4420	2	PAS
GROUP	1	2	3	4	5	CL	6

MONTI CAD DWG 'A'

MONTICELLO NUCLEAR GENERATING PLANT
POST ACCIDENT SAMPLING SYSTEM P&ID COMPOSITE

NORTHERN STATES POWER COMPANY
MINNEAPOLIS

SCALE: NONE REV G
NH-96042-1

REVIEWED BY Q-LIST EXTENSION COMMITTEE: 6-20-02 DATE
APPROVED BY: 6-25-02 DATE
QLEC CHAIRMAN

NH-116629

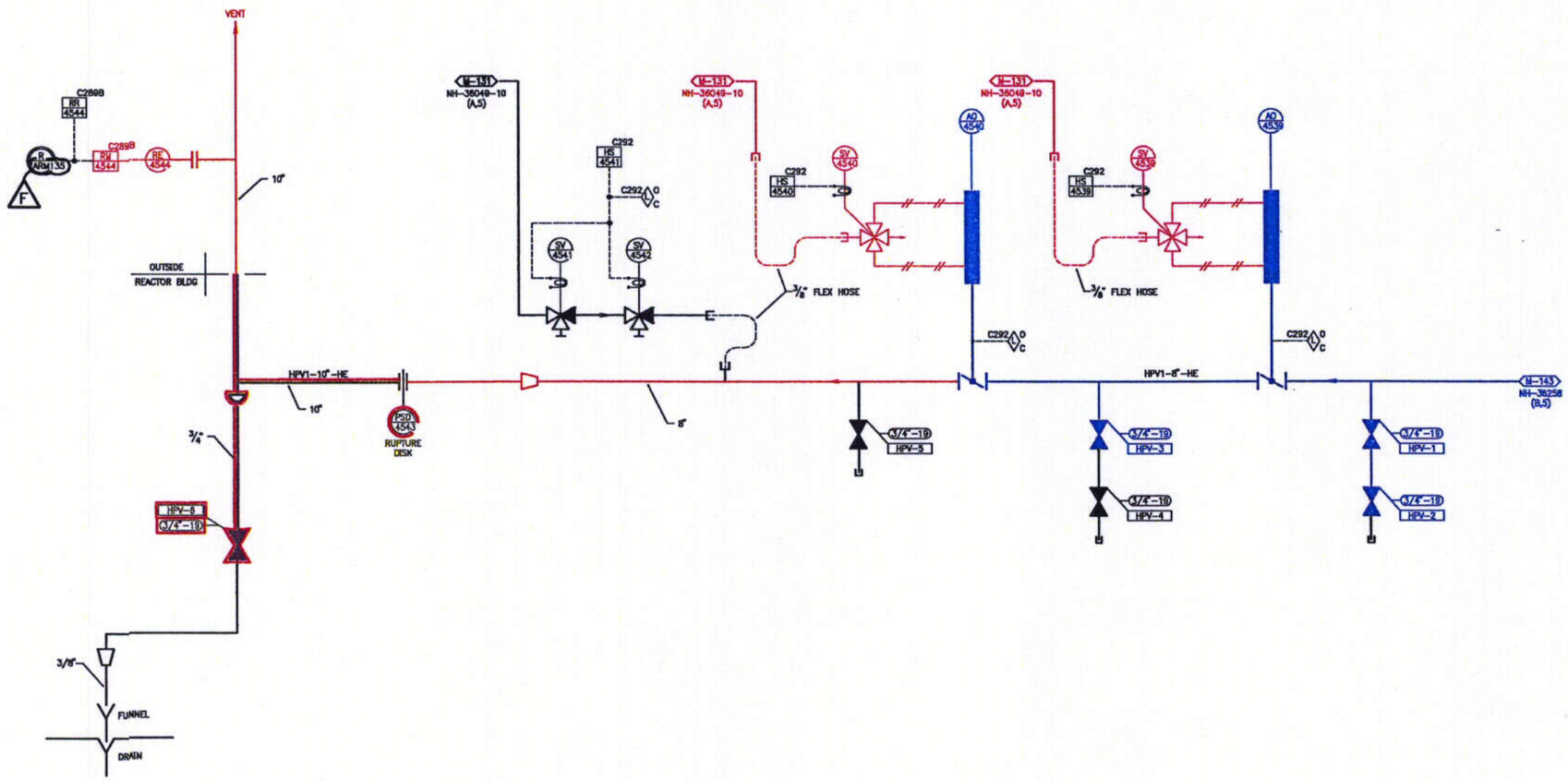

REVISIONS

B AS BUILT REVISED TO REFLECT THE PRIMARY CONTAINMENT HARD PIPE VENT MOD PER DRR MO-93-129
DWN: EHC 4-28-93
CHK: RW 5-3-93
MOD: 92Q295
FILMED: 5-10-93

C AS BUILT REVISED TO REFLECT THE PRIMARY CONTAINMENT HARD PIPE VENT MOD PER DRR MO-93-217
DWN: RW 7-15-93
CHK: MH 7-21-93
MOD: 92Q295
FILMED: 8-11-93

D AS BUILT: REVISED TO REFLECT SRV/MSIV PNEUMATIC SYSTEM UPGRADE MOD. PART C PER DRR: MO-94-205
DWN: RHH 10-17-94
CHK: ATD 10-20-94
MOD: 93Q305 (C)
FILMED: 11-30-94

E AS-BUILT: REVISED TO REFLECT REMOVAL OF LOCKED OPEN AND LOCKED CLOSED DESIGNATION IN ACCORDANCE WITH SRI 96-003 PER DRR: MO-96-053
DWN: RHH 4-4-96
CHK: PEB 4-13-96
MOD:
FILMED: 4-22-96

F AS-BUILT: REVISED COMPUTER POINT ID SYNTAX AS INDICATED PER DRR: MO-97-0052
DWN: RHH 7-16-97
CHK: PEB 7-29-97
MOD:
FILMED: 8-27-97

C41

COLOR LEGEND
RED
BLUE
GREEN
YELLOW
ORANGE
BROWN
PURPLE

CONTROLLED
See Critical Drawing File for Current System Configuration

BECHTEL DWG No. 10040-U12-M-001-AM-A, JOB No. 10040

MONTI CAD DWG 'A'						
SIGNIFICANT NUMBER	8700		RX	1	4420	1
GROUP	1	2	3	4	5	CL 6

NSP
MONTICELLO NUCLEAR GENERATING PLANT UNIT 1

MONTICELLO NUCLEAR GENERATING PLANT
P & ID
HARD PIPE VENT SYSTEM

NORTHERN STATES POWER COMPANY
MINNEAPOLIS

SCALE: NONE | REV F
NH-116629

REVIEWED BY Q-LIST EXTENSION COMMITTEE: 9-26-97 DATE
APPROVED BY: D R Rodell 10-9-97 DATE
QLEC CHAIRMAN

PLEASE RETURN TO CENTRAL FILES

PLEASE RETURN TO CENTRAL FILES

TYPICAL T.I.P. SYSTEM
SHOWING EQUIPMENT & FITTINGS REQUIRED FOR EACH TIP TUBE RUN

* OR OTHER ENG. APPROVED EQUIV.
1

SUGGESTED TOOL
FLARING TOOL CAT "400-F" IMPERIAL EASTMAN CORP.

NOTES CONT FROM SHEET 1

11. ALL TUBING AND FITTINGS ARE TO BE SHIPPED TO FIELD FOR MODIFICATION AND INSTALLATION
12. ALL TUBE RUNS, FROM PENETRATION FLANGE TO VALVE ASM.-GUIDE TUBE, TO BE TESTED BUBBLE TIGHT AT 60 P.S.I.G.
13. ALL GAS & AIR LINES AND FITTINGS BY A.E. FOR 100 P.S.I SERVICE.

1 2

GENERAL ELECTRIC 719E520

NEUTRON MONITORING SYSTEM ARRANGEMENT

FOR BGE&SO (MONTICELLO) 1-3

NX 7865-32-3

A.P.E.D. — 719E520

SAN JOSE CALIF.