Draft Submittal
(Pink Paper)

E. I. HATCH NUCLEAR PLANT
EXAM 2002-301
50-321 & 50-366
OCTOBER 16 - 18, 21 - 25, &
OCTOBER 30, 2002,

1. Reactor Operator Written Exam

RO ONLY

+

COMBINED.

TABLE OF CONTENTS

1
2
3
4
5
6
7
8
9
10
11
12
13
14
15
16
17
18
19
20
21
22
23
24
25
26
27
28
29
30
31

P.O. Box 4084, New Windsor, NY 12553

SPEED-DEX™
REPRODUCIBLE INDEX SYSTEM

41. 201001G2.1.28 001

Unit 2 is operating at 80% power. "2A" CRD Pump is in service. The operators observe the following indications:

Charging water pressure:	Low
Cooling water flow:	Low
Drive water flow:	Low
Cooling water dP:	Low
Drive water dP:	Low
CRD Mechanism temperatures:	Rising
Recirc Pump seal temperatures:	Rising

Which ONE of the following CRD component problems has caused these abnormal conditions? (Reference included)

A. The flow control valve has failed closed.

B. The drive water pressure control valve has closed.

C. The cooling water control valve has failed closed.

D. The drive water filter is plugged.

This test question was on the last exam.
Re-ordered answers.

Provide a copy of Fig. 12 to SI-LP-00101 Rev. 00.
Distribute Figure 12.

RO Tier:	T1G1	SRO Tier:	T1G1
Keyword:	FUEL TEMPERATURE	Cog Level:	C/A 3.3/3.4
Source:	B	Exam:	HT02301
Test:	R	Misc:	TCK

QUESTIONS REPORT
for HT2002

1. 201001G2.1.28 001

Unit 1 is operating at 80% power. "1A" CRD Pump is in service. The operators observe the following indications:

Charging water pressure:	Low
Cooling water flow:	Low
Drive water flow:	Low
Cooling water dP:	Low
Drive water dP:	Low
CRD Mechanism temperatures:	Rising
Recirc Pump seal temperatures:	Rising

Which ONE of the following CRD component problems has caused these abnormal conditions? (Reference included)

A. The flow control valve has failed closed.

B. The drive water pressure control valve has closed.

C. The cooling water control valve has failed closed.

D. The drive water filter is plugged.

This test question was on the last exam.
Re-ordered answers.

Provide a copy of Fig. 12 to SI-LP-00101 Rev. 00.
Distribute Figure 12.

RO Tier:	T1G1	SRO Tier:	T1G1
Keyword:	FUEL TEMPERATURE	Cog Level:	C/A 3.3/3.4
Source:	B	Exam:	HT02301
Test:	R	Misc:	TCK

QUESTIONS REPORT
for HT2002

1. 201001G2.1.28 001

Unit 1 is operating at 80% power. "1A" CRD Pump is in service. The operators observe the following indications:

Charging water pressure:	Low
Cooling water flow:	Low
Drive water flow:	Low
Cooling water dP:	Low
Drive water dP:	Low
CRD Mechanism temperatures:	Rising
Recirc Pump seal temperatures:	Rising

Which one of the following CRD component problems has caused these abnormal conditions? (Reference included)

A. The flow control valve has failed closed.

B. The drive water pressure control valve has closed.

C. The cooling water control valve has failed closed.

D. The drive water filter is plugged.

This test question was on the last exam.
Re-ordered answers.

Provide a copy of Fig. 12 to SI-LP-00101 Rev. 00.
Distribute Figure 12.

10. Unit 1 is operating at 80% power. "1A" CRD Pump is in service. The operators observe the following indications:

Charging water pressure:	Low
Cooling water flow:	Low
Drive water flow:	Low
Cooling water dP:	Low
Drive water dP:	Low
CRD Mechanism temperatures:	Rising
Recirc Pump seal temperatures:	Rising

Which one of the following CRD component problems has caused these abnormal conditions? (References included)

✓a. The drive water filter is plugged.
b. The flow control valve has failed closed.
c. The cooling water control valve has failed closed.
d. The drive water pressure control valve has closed.

Provide a copy of Fig. 12 to LP-00101-00 as a reference.

New question
SI-LP-00101-00, p. 8, 35

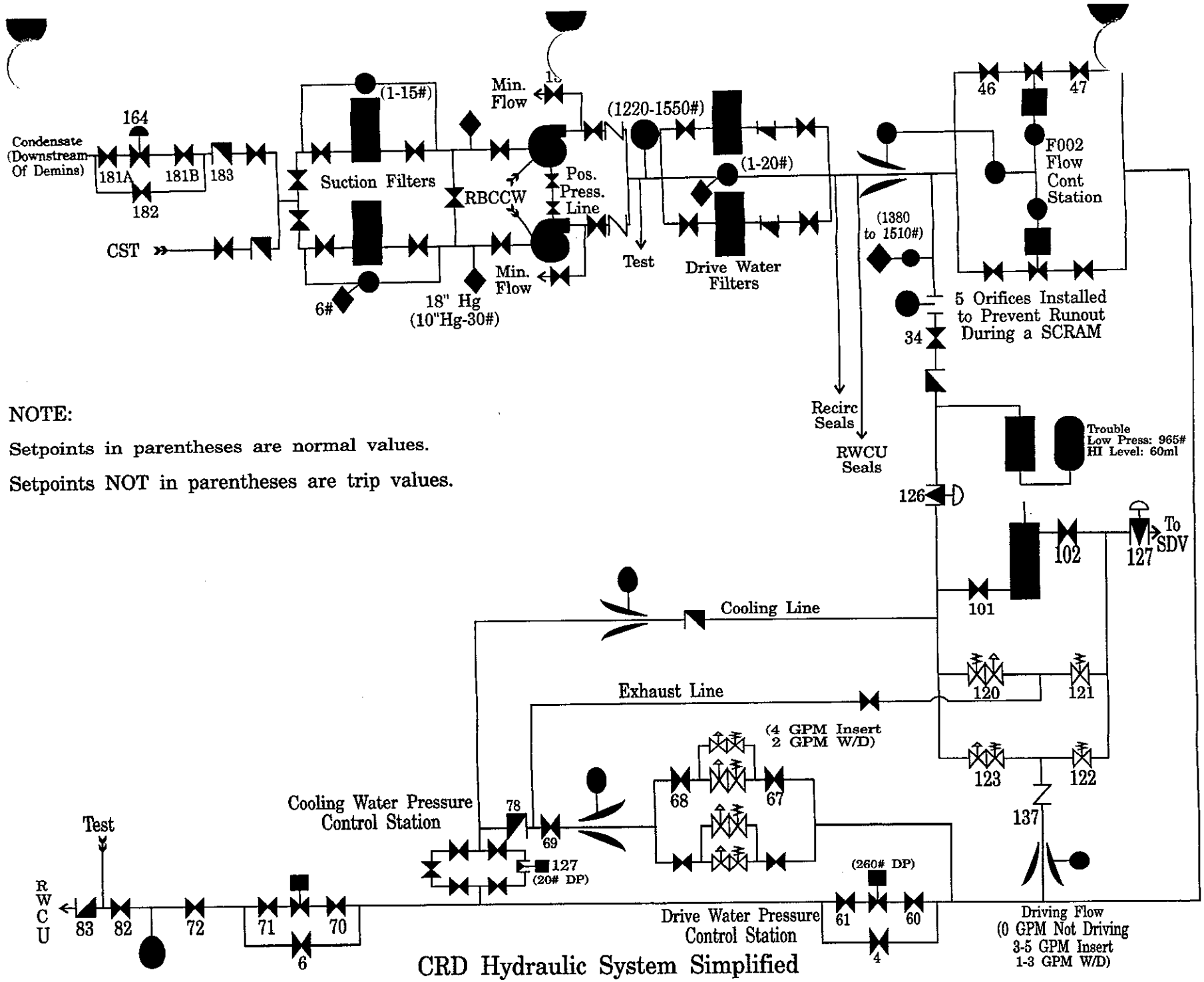

NOTE:

Setpoints in parentheses are normal values.

Setpoints NOT in parentheses are trip values.

CRD Hydraulic System Simplified

SI-00101 Fig 1

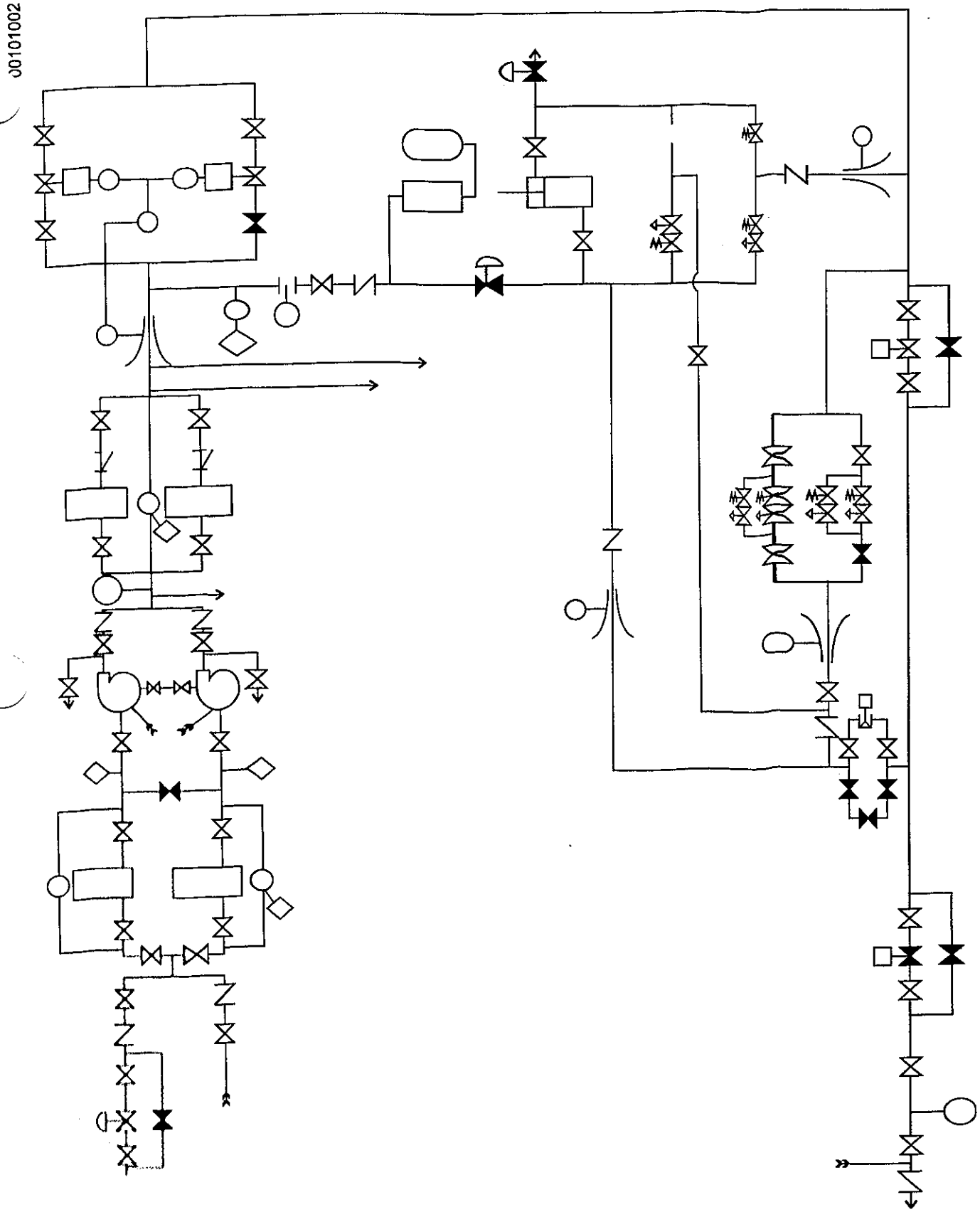

CONTROL ROD DRIVE HYDRAULIC SYSTEM 1 CRTI

SI-00101 Fig 12

2. 201001K2.02 001

Unit 1 is operating at 100% RTP.

Which ONE of the following represents the expected response of the Scram Pilot Solenoid Valves and the Backup Valves due to a loss of RPS "A"?

A. One backup scram valve energizes and half of the scram pilot solenoid valves de-energize.

B. One backup scram valve energizes and all scram pilot solenoid valves de-energize.

C. Both backup scram valves energize and all scram pilot solenoid valves de-energized.

D. Both backup scram valves remain de-energized and half of the scram pilot solenoid valves de-energize.

References: SI-LP-01001 Rev. SI-01 pg 6 & 7 of 68
EO 010.002.a.01, 200.102.a.01

A. Incorrect since a loss of RPS does not cause a backup scram valve to energize.

B. Incorrect since a loss of RPS does not cause a backup scram valve to energize and it does cause a loss of power to half of the scram pilot solenoid valves.

C. Incorrect since a loss of RPS A causes half of the scram pilot solenoid valves to de-energize.

D. Correct answer.

RO Tier:	T2G1	SRO Tier:	
Keyword:	SCRAM VALVE	Cog Level:	MEM 3.6/3.7
Source:	B	Exam:	HT02301
Test:	R	Misc:	TCK

QUESTIONS REPORT
for HT2002

1. 201001K2.02 001

With Unit 1 operating at 100% RTP the expected response of the Scram Pilot Solenoid Valves and the Backup Scram Valves to a loss of RPS "A" would be:

A. One backup scram valve energizes and half of the scram pilot solenoid valves de-energize.

B. One backup scram valve energizes and all scram pilot solenoid valves de-energize.

C. Both backup scram valves remain de-energized and all scram pilot solenoid valves remain energized.

D. Both backup scram valves remain de-energized and half of the scram pilot solenoid valves de-energize.

References: SI-LP-01001 Rev. SI-01 pg 6 & 7 of 68
EO 010.002.a.01, 200.102.a.01

A. Incorrect since a loss of RPS does not cause a backup scram valve to energize.

B. Incorrect since a loss of RPS does not cause a backup scram valve to energize and it does cause a loss of power to half of the scram pilot solenoid valves.

C. Incorrect since a loss of RPS A causes half of the scram pilot solenoid valves to de-energize.

D. Correct answer.

14. Given a list of power supplies, SELECT the Normal and Alternate power supplies for each RPS bus. (010.001.A.01)

15. IDENTIFY the back panels associated with the RPS System. (010.001.A.06)

16. Given a loss of an RPS Bus, DESCRIBE the effects on the following Systems = (010.002.A.01, 200.102.A.01)

    a. RPS
    b. Primary Containment Isolation
    c. SBGT
    d. Secondary HVAC

17. Given a list of statements, IDENTIFY the steps necessary to align alternate power from Essential Bus "A" or "B" to RPS Bus "A" or "B." (010.025.A.02)

Fig 01

B. When one of the critical parameters exceeds its safe level, the Reactor must be scrammed. The RPS sends controlling signals to the Control Rod Drive system to cause the actual insertion of control rods.

- The RPS is composed of two independent trip systems, "A" and "B."

Fig 02

C. When a Reactor scram signal is initiated by the RPS, the outlet scram valve (F127) opens to vent the area above the piston to the scram discharge header and the inlet scram valve (F126) opens to admit pressure from the scram accumulator to the area below the CRD drive piston.

- The large differential pressure applied to the drive piston produces a large upward force on the index tube and control rod, inserting the rod into the Reactor.

D. In order to scram the control rods, the scram pilot solenoid valves F117 in trip system "A" and the F118 valves in trip system "B" must both swap to the vent position (de-energize to vent).

1. Instrument air flows through all the scram pilot air solenoid valves (137 each). In the non-scram condition, both scram pilot solenoid valves are energized, and instrument air holds the inlet and outlet scram valves closed.

   - RPS trip system "A" supplies power to the F117 valves, while RPS trip system "B" supplies power to the F118 valves.

2. Instrument air also normally flows through the backup scram valves (F110A and F110B), test valve (F008), and one of the two scram air header pilot valves (F009 or F040).

E. If a scram setpoint is exceeded in RPS trip system "A" only (commonly referred to as a half scram), the scram pilot solenoid valves in trip system "A" (F117s) de-energize, but instrument air is still applied to the scram valves through the trip system "B" scram pilot solenoid valves (F118s), and the control rods would not scram.

- A half scram on trip system "B" would have the same results since the scram pilot solenoid valves from trip system "A" would remain energized, supplying instrument air to the scram valves.

F. When a scram setpoint is exceeded in BOTH the "A" and "B" trip systems, (commonly referred to as a full scram) both scram pilot solenoid valves are de-energized, the instrument air supply is isolated from the scram valves, and the supply lines from the scram pilot air solenoid valves to the scram valves are vented to atmosphere, permitting the inlet and outlet scram valves to open and the control rods to be scrammed.

G. A "backup" scram action also occurs when a scram setpoint is exceeded in both "A" and "B" trip systems. When a full scram signal is generated by RPS, both backup scram solenoid valves (F110A and F110B) are energized.

1. Energizing the backup scram solenoid valves will isolate instrument air from the scram air header and vent the scram air header to atmosphere.

2. This backup action (venting the scram air header) by itself should cause insertion of all control rods.

H. The third action that occurs when a full scram signal is generated by RPS is the closing of the vent and drain valves on the Scram Discharge Volume (SDV).

1. During normal operation (non-scram condition), the SDV vent and drain valves are held open by air pressure supplied through scram air header pilot valves F009 and F040.

a. F009 supplies air to vent valves F010A, F010B, and drain valve F011.

b. F040 supplies air to vent valves F035A, F035B, and drain valve F037.

2. Both F009 and F040 are dual-solenoid operated valves, one solenoid powered from RPS trip system "A" and one solenoid powered from RPS trip system "B".

a. A trip of only one RPS trip system will not shut these valves.

b. Note that energizing the backup scram solenoid valves (F110A and F110B) will also close the scram discharge volume vent and drain valves by isolating air to F009 and F040.

I. The logic for the RPS trip system is divided into five sections. These five sections are:

7. 204000K5.04 001

Unit 1 is operating at full power when RBCCW flow to the RWCU system is lost.

Which ONE of the following is the expected plant response of the RWCU system to this event?

A. The system will not isolate; the Holding pumps will start.

B. ✓ The system will isolate; the Holding pumps will start.

C. The system will not isolate; the Holding pumps will trip.

D. The system will isolate; the Holding pumps will trip.

References: INPO Bank for Fitzpatrick 1
SI-LP-00301-00 Rev. SI-00 pg. 17-20 of 34
EO 003.002.a.10

A. Incorrect since the system will isolate on High NRHX Outlet Temp of 140 F.

B. Correct answer.

C. Incorrect since the system will isolate on High NRHX Outlet Temp of 140 F.

D. Incorrect since the hold pumps will start on system low flow when the RWCU system isolates.

RO Tier:	T2G2	SRO Tier:	
Keyword:	RWCU ISOLATION	Cog Level:	C/A 2.7/2.7
Source:	B	Exam:	HT02301
Test:	R	Misc:	TCK

3. 204000K5.04 001

Unit 1 is operating at full power when RBCCW flow to the RWCU system is lost. Which one of the following is the expected plant response of the RWCU system to this event?

A. The system will not isolate; the Holding pumps will start.

B. The system will isolate; the Holding pumps will start.

C. The system will not isolate; the Holding pumps will trip.

D. The system will isolate; the Holding pumps will trip.

References: INPO Bank for Fitzpatrick 1
SI-LP-00301-00 Rev. SI-00 pg. 17-20 of 34
EO 003.002.a.10

A. Incorrect since the system will isolate on High NRHX Outlet Temp of 140 F.

B. Correct answer.

C. Incorrect since the system will isolate on High NRHX Outlet Temp of 140 F.

D. Incorrect since the hold pumps will start on system low flow when the RWCU system isolates.

5. Given a list of statements, SELECT the statement representing the purpose of the following RWCU System components. (003.002.A.04)
   a. RWCU Inboard/Outboard Isolation Valves F001/F004
   b. Regenerative Heat Exchanger
   c. Non-Regenerative Heat Exchanger
   d. RWCU Demineralizer Bypass Valve
   e. Filter Demineralizers
   f. Holding Pump
   g. Filter Demineralizer Effluent Filter
   h. Return Isolation Valve (F042)
   i. RWCU Blowdown Flow Control Valve (F033)
   j. RWCU Dump Isolation Valves (F034, F035)

6. Given initial system and plant conditions and any changes to those conditions, PREDICT RWCU System responses including: (003.002.A.10)
   a. Isolations of 2G31-F001, 2G31-F004, and 2G31-F033
   b. Interlocks associated with low flow/loss of power demineralizer isolation
   c. RWCU Pump Trips

7. Given a P&ID or a simplified drawing of the RWCU System, LOCATE the following system interfaces; (003.002.A.03)
   a. Reactor Recirculation System
   b. Reactor Vessel
   c. High Pressure Coolant Injection System
   d. Reactor Core Isolation Cooling System
   e. Radwaste System (RWCU Drains)
   f. Condensate System
   g. Control Rod Drive Hydraulics System
   h. Reactor Building Closed Cooling Water System

8. Given a copy of the Plant Hatch load list, DETERMINE the power supplies to RWCU Pumps and motor operated valves. (003.002.A.02)

9. Given a list of plant conditions, DETERMINE the plant condition which will directly result in the auto trip of the RWCU System. (003.022.A.01)

C. Interlocks

1. F001 RWCU Inboard Suction Isolation Valve

Fig 02

F001 closes on any of the listed RWCU System (Group V) Isolation Signals:

a. Low RWL at -35".

b. High flow differential between inlet and outlet of RWCU System, set at ≤55.5 gpm (56 gpm Unit 1) with a 42.5 second time delay.

c. High ambient temperature in RWCU Equipment Rooms, set at:

- RWCU Pump Room 140°F
- RWCU Heat Exchanger Room 140°F
- RWCU Phase Separator Room 140°F

d. High differential temperature across RWCU Equipment Room ventilation ducts, set at:

- RWCU Pump Room 60°F
- RWCU Heat Exchanger Room 60°F
- RWCU Phase Separator Room 60°F
- The Isolation setpoints for Unit 1 vary between 30° and 60°F.

2. F004 RWCU Outboard Suction Isolation Valve

Fig 02

F004 closes on all of the Isolation Signals listed under F001 and also closes on the following Group V Isolation Signals;

a. High outlet temperature on Non-regenerative Heat Exchanger at 140°F.

b. Standby Liquid Control System initiation.

3. Reactor Water Cleanup Pumps

a. Controls

Unit 2, Pump "B" start is delayed 15 seconds from the time the control switch is placed to start to allow ground fault check circuitry to function properly. ("1A" pump has continuous ground monitoring)

b. Interlocks

RWCU Pumps "A" and "B" will not start if either Suction Isolation Valve (F001 or F004) is not fully open.

c. Trips

1) High Pump Cooling Water temperature of greater than 140°F and/or high motor temp 140°F (High Motor Temp Unit 1 only)

2) Low RWCU System flow of less than 60 gpm

a) Time delayed 15 seconds on Unit 1 during pump start only.

b) Unit 2 Pump "B" time delay is set at 30 seconds due to the fact that on a pump start the pump does not actually rotate for the first 15 seconds while it is being checked for a ground fault.

3) Either of the RWCU Suction Isolation Valves F001 or F004 not fully open.

4. Demineralizer Inlet Isolation Valves and Vessel Inlet Valves (F052A/B and F053A/B)

a. Isolations

1) Unit 2 - F052A/B isolate on:

- A loss of power to local panel 2G31-P001 for greater than or equal to five seconds.

2) Unit 2 - F053A/B isolate on:

- A flow decrease that reduces flow from 76 gpm to 41 gpm in less than 15 seconds.

The Low Low Flow Isolation is Bypassed on Unit 1 if the vessel flow/switch is in the Low Low position.

3). Unit 1 - F053A/B isolate on:

a) A flow decrease that reduces flow from 76 gpm to 41 gpm in less than 15 seconds.

b) Loss of power to G31-P001 for five seconds.

b. Interlocks

1) Unit 2

a) F052A/B are interlocked closed following a loss of power to 2G31-P001 until the Demineralizer Backwash cycle is complete.

b) F053A/B are interlocked closed on Low Low Flow until the Low Low Flow Reset pushbutton is depressed.

2). Unit 1

a) F053A/B are interlocked closed on Low Low flow of 41 gpm unless the Low Low Flow Switch on G31-P001 is in the Low Low Flow position.

b) F053A/B are interlocked closed on a Rapid Flow Decrease isolation OR a Loss Of Power isolation until the Demineralizer Backwash Cycle is complete.

5. Holding Pump

Automatic Features

a. Automatically starts on a Demineralizer Low Flow of 77 gpm. (Unit 1 60 gpm)

b. Automatically trips on a loss of power to the local control panel that results in a Demineralizer isolation.

c. Is Interlocked off following a Loss of Power Demineralizer Isolation until the backwash cycle is complete.

6. RWCU Demineralizer Vessel Outlet FCV F054A/B

Automatic Features:

a. Unit 2 valves have the same automatic features as the Unit 2 Demin Inlet Valves F053A/B.

b. Unit 1 valves have the same automatic features as the Unit 1 Demin Inlet Valves F053A/B.

7. Demineralizer Vessel Outlet Isolation Valve (F056A/B)

a. Isolations

- Unit 2 F056A/B Demineralizer Outlet Isolation Valves have the same isolation on a loss of power as the F052A/B Demineralizer Inlet Isolation Valves.

b. Interlocks

1) Unit 2

F056A/B are interlocked closed following a loss of power to 2G31-P001 until the Demineralizer Backwash cycle is complete.

2) Unit 1

F056A/B perform no automatic features.

8. Blowdown Flow Control Valve (FCV F033)

Isolations

a. Closes on low upstream pressure (5 psig) to prevent drawing a vacuum on RWCU System.

b. Closes on high downstream pressure (140 psig)

This closure protects the piping to Radwaste and Main Condenser from over-pressure. Additional protection provided by relief valve set at 150 psig.

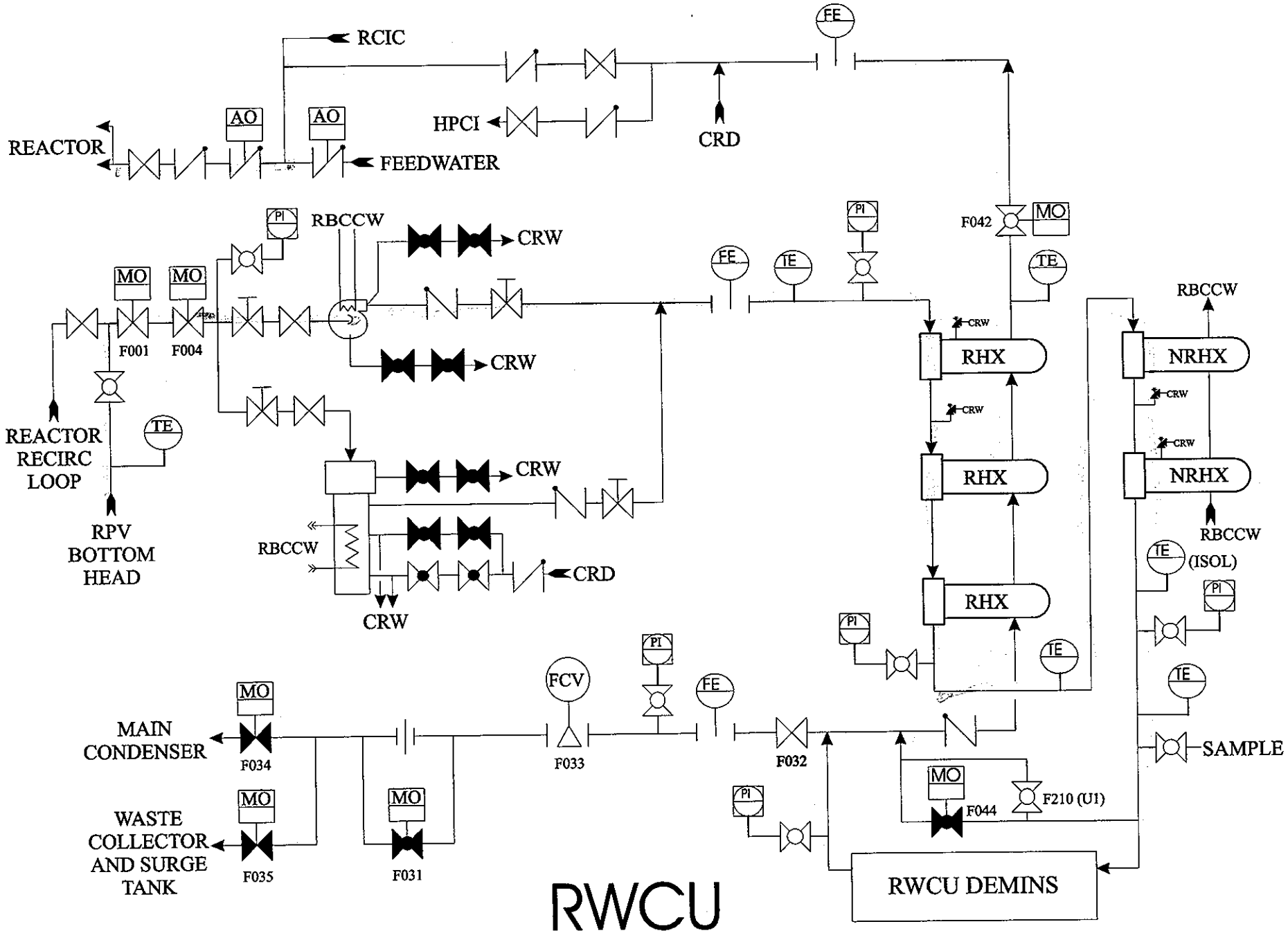
RCIC
HPCI
CRD
REACTOR
FEEDWATER
AO
AO
FE
PI
RBCCW
CRW
MO
MO
F001
F004
F042
MO
TE
FE
TE
PI
REACTOR
RECIRC
LOOP
RPV
BOTTOM
HEAD
TE
RBCCW
CRD
CRW
RHX
RHX
RHX
NRHX
NRHX
RBCCW
RBCCW
TE
(ISOL)
PI
TE
TE
SAMPLE
MAIN
CONDENSER
F034
MO
WASTE
COLLECTOR
AND SURGE
TANK
F035
MO
F031
MO
FCV
F033
PI
FE
F032
PI
MO
F044
F210 (U1)
RWCU DEMINS
RWCU

12. 205000K3.04 001

Unit 2 has entered Mode 4 by placing the "B" Loop of RHR in Shutdown Cooling. The following conditions currently exist:

Reactor Water Level	+35 inches (indicated)
Reactor Coolant Temp	185°F and decreasing
SDC flow	8000 gpm

The Control Board Operator is directed to adjust the SDC Flow to lower the cooldown rate. The SDC flow rate is found to be 7000 gpm.

Which ONE of the following describes what Recirc Loop Temperature would do under these conditions?

A. DECREASE due to greater ambient losses.

B. INCREASE due to lower flow through the loop.

C. DECREASE due to inadequate circulation through the core.

D. INCREASE due to an increase of forced circulation through the core.

References: INPO bank for Fitzpatrick 1
SI-LP-00701-00 Rev. SI-00 pg. 10 of 48
EO 007.007.a.02, 007.024.b.02

A. Incorrect since ambient losses should decrease.

B. Incorrect since pumping cooler water since natural circulation has been lost.

C. Correct answer since RWL is too low for natural circulation and the recirc loop is pumping cooler water.

D. Incorrect since natural circulation has been lost.

RO Tier:	T2G2	SRO Tier:	
Keyword:	SHUTDOWN COOLING	Cog Level:	C/A 3.7/3.7
Source:	B	Exam:	HT02301
Test:	R	Misc:	TCK

42. 205000K3.04 001

Unit 2 has entered Mode 4 by placing the "B" Loop of RHR in Shutdown Cooling. The following conditions currently exist:

Reactor Water Level	+35 inches
Reactor Coolant Temp	185°F and decreasing
SDC flow	8000 gpm

The Control Board Operator is directed to adjust the SDC Flow to lower the cooldown rate. The SDC flow rate is found to be 7000 gpm.

Which ONE of the following describes what Recirc Loop Temperature would do under these conditions?

A. DECREASE due to greater ambient losses.

B. INCREASE due to lower flow through the loop.

C. DECREASE due to a loss of forced circulation through the core.

D. INCREASE due to an increase of forced circulation through the core.

References: INPO bank for Fitzpatrick 1
SI-LP-00701-00 Rev. SI-00 pg. 10 of 48
EO 007.007.a.02, 007.024.b.02

A. Incorrect since ambient losses should decrease.

B. Incorrect since pumping cooler water since natural circulation has been lost.

C. Correct answer since RWL is too low for natural circulation and the recirc loop is pumping cooler water.

D. Incorrect since natural circulation has been lost.

RO Tier:	T2G2	SRO Tier:	
Keyword:	SHUTDOWN COOLING	Cog Level:	C/A 3.7/3.7
Source:	B	Exam:	HT02301
Test:	R	Misc:	TCK

10. 205000K3.04 001

Unit 2 has entered Mode 4 by placing the "B" Loop of RHR in Shutdown Cooling. The following conditions currently exist:

Reactor Water Level	+35 inches
Reactor Coolant Temp	185°F and decreasing
SDC flow	8000 gpm

The Control Board Operator is directed to adjust the SDC Flow to lower the cooldown rate. The SDC flow rate is adjusted to 7000 gpm.

Which ONE of the following describes what Recirc Loop Temperature would do under these conditions?

A. DECREASE due to greater ambient losses.

B. INCREASE due to lower flow through the loop.

C. DECREASE due to loss of natural circulation.

D. INCREASE due to more natural circulation.

References: INPO bank for Fitzpatrick 1
SI-LP-00701-00 Rev. SI-00 pg. 10 of 48
EO 007.007.a.02, 007.024.b.02

A. Incorrect since ambient losses should decrease.

B. Incorrect since pumping cooler water since natural circulation has been lost.

C. Correct answer since RWL is too low for natural circulation and the recirc loop is pumping cooler water.

D. Incorrect since natural circulation has been lost.

RO Tier:	T2G2	SRO Tier:	
Keyword:	SHUTDOWN COOLING	Cog Level:	C/A 3.7/3.7
Source:	B	Exam:	HT02301
Test:	R	Misc:	TCK

QUESTIONS REPORT
for HT2002

1. 205000K3.04 001

Unit 2 has entered Mode 4 by placing the "B" Loop of RHR in Shutdown Cooling. The following conditions currently exist:

Reactor Water Level	+35 inches
Reactor Coolant Temp	185 F and decreasing
SDC flow	8000 gpm

The Control Board Operator is directed to adjust the SDC Flow to lower the cooldown rate. The SDC flow rate is adjusted to 7000 gpm. Under these conditions the Recirc Loop Temperature would:

A. DECREASE due to greater ambient losses.

B. INCREASE due to lower flow through the loop.

C. DECREASE due to loss of natural circulation.

D. INCREASE due to more natural circulation.

References: INPO bank for Fitzpatrick 1
SI-LP-00701-00 Rev. SI-00 pg. 10 of 48
EO 007.007.a.02, 007.024.b.02

A. Incorrect since ambient losses should decrease.

B. Incorrect since pumping cooler water since natural circulation has been lost.

C. Correct answer since RWL is too low for natural circulation and the recirc loop is pumping cooler water.

D. Incorrect since natural circulation has been lost.

007.024.B Given 34SO-E11-010-2/1S "Residual Heat Removal System", PERFORM plant cooldown using RHR shutdown cooling mode.

013.004.A Given 34S0-E11-010-2/1S "Residual Heat Removal System", LOWER torus level by draining to radwaste with RHR "B."

ENABLING OBJECTIVES

1. Given a simplified drawing of the RHR system, TRACE the flowpath for RHR in LPCI mode. (006.001.a.01)

2. Given a simplified drawing of the RHR system, TRACE the flowpath of Drywell Sprays. (007.001.a.01)

3. Given a simplified diagram of the RHR system, TRACE the flowpath for Torus Spray. (007.003.a.01)

4. Given a simplified drawing of the RHR system, TRACE the flowpath for Torus Cooling. (007.005.a.01)

5. Given a simplified drawing of the RHR system, TRACE the flowpath for RHR operating in the Shutdown Cooling Mode. (007.007.a.04, 007.024.b.01)

6. Given plant conditions, EVALUATE those conditions to DETERMINE if RWL is adequate for RHR Shutdown Cooling flow. (007.007.a.02, 007.024.b.02)

7. Given a simplified drawing of the RHR system, TRACE the flowpath for RHR in fuel pool cooling assist mode. (007.016.a.01)

8. Give a simplified drawing of the RHR system, TRACE the flowpath for draining the RPV to the Torus. (006.011.a.01)

9. Given a simplified drawing of the RHR system, TRACE the flowpath for draining the Torus to radwaste with RHR Loop "B." (013.004.a.01)

10. From a list of statements, SELECT the statement that describes the consequences on the RHR system if the RHR Pump Minimum Flow bypass Valve fails closed. (006.005.a.04)

11. From a list of statements, SELECT the statement that describes the maximum flow rate for RHR in Shutdown Cooling and the reason for the flow limit. (007.007.a.03, 007.024.b.03)

. From a list of power supplies, SELECT the power supply for the RHR Pumps. (006.001.a.02)

13. Given a Plant Hatch load list, DETERMINE power supplies to RHR valves and components. (006.007.a.01)

Fig 5

E. Shutdown Cooling Flow Path

1. The initial phase of cooling down the plant is accomplished by dumping steam from the reactor vessel to the main condenser, with the main condenser acting as the heat sink. When reactor pressure has decreased to the value where the steam supply pressure in not sufficient to maintain the turbine shaft gland seals, vacuum in the main condenser cannot be maintained, and the RHR system is placed in the shutdown cooling mode of operation.

2. The shutdown cooling mode is capable of completing cooldown to 125°F in less than 20 hours and maintaining the system at 125°F so that the reactor can be refueled.

3. Suction for the RHR pump is taken from the Reactor Recirculation pump Loop "A" ("B") suction line through SDC Isolation MOVs E11-F009 and E11-F008. Flow continues through SDC suction valves MOV E11-F006A-D to the RHR pumps.

4. The RHR pump discharges through the heat exchanger via Inlet Valve E11-F047A/B and Outlet Valve E11-F003A/B. Heat is removed from the reactor coolant by transferring the heat to the RHRSW system.

5. SDC flow then returns to the reactor vessel via the normal LPCI injection path previously discussed.

NOTE: RWL must be greater than +53 inches if RHR flow is less than 7700 gpm (>53 inches allows for natural circulation). If RHR flow is greater than 7700 gpm, RWL must be maintained above +33 inches. When shutdown cooling is placed in service, RHR flow is adjusted to 7700-8200 gpm. This ensures adequate cooling and flow through the core (prevents stratification).

Fig 6

F. Fuel Pool Cooling Assist (RHR Loop B only)

1. RHR loop "B" is required to be in SDC with the reactor in Condition 5 (refueling) and the Reactor Vessel Head and Transfer Canal Gates removed.

   - Due to the FPC pipe size there would not be adequate flow for pump protection without the SDC flowpath. The installation of spectacle flanges by maintenance is required in order to use this mode of operation.

11. 206000A2.16 001

Unit 2 has just scrammed due to High Drywell pressure. The Control Board Operator has verified that all low pressure ECCS systems are operating and that the Diesel Generators are running unloaded. HPCI and RCIC are still in the standby condition. The following conditions exist on Unit 2:

Reactor Pressure	980 psig
Reactor Water Level	-25" increasing
Drywell Pressure	3.5 psig increasing
Drywell Temperature	215°F increasing

Which ONE of the following is the appropriate operator action(s) to take with regards to the HPCI system?

A. Leave HPCI in standby since water level is increasing.

B. Place the HPCI Aux Oil Pump in PULL-TO-LOCK per *34SO-E41-001-2S, High Pressure Coolant Injection (HPCI) System*. Declare HPCI INOPERABLE and enter Tech Spec LCO.

C. Perform a manual startup of HPCI using the HPCI Manual S/U for Vessel Injection Placard per *34SO-E41-001-2S,High Pressure Coolant Injection (HPCI) System*. Notify Shift Supervisor when HPCI is injecting.

D. Verify that HPCI is in a standby lineup since it wasn't required to start.

References: 34SO-E41-001-2S, High Pressure Coolant Injection (HPCI) System, Rev. 21.2 pg 15,26 and 58 of 63.

A. Incorrect since HPCI should have started when Drywell Pressure exceeded 1.85 psig.

B. Incorrect due to actions are required to be taken manually if an automatic action doesn't occur.

C. Correct answer.

D. Incorrect since HPCI should have started when Drywell Pressure exceeded 1.85 psig.

RO Tier:	T2G1	SRO Tier:	
Keyword:	HPCI	Cog Level:	C/A 4.0/4.1
Source:	N	Exam:	HT02301
Test:	R	Misc:	TCK

QUESTIONS REPORT
for HT2002

1. 206000A2.16 001

Unit 2 has just scrammed due to High Drywell pressure. The Control Board Operator has verified that all low pressure ECCS systems are operating and that the Diesel Generators are running unloaded. HPCI and RCIC are still in the standby condition. The following conditions exist on Unit 2:

Reactor Pressure	980 psig
Reactor Water Level	-25" increasing
Drywell Pressure	3.5 psig increasing
Drywell Temperature	215 F increasing

SELECT the appropriate action(s) for the operator to take with regards to the HPCI system.

A. Leave HPCI in standby since water level is increasing.

B. Place the HPCI Aux Oil Pump in PULL-TO-LOCK per 34SO-E41-001-2S. Declare HPCI INOPERABLE and enter Tech Spec LCO.

C. Perform a manual startup of HPCI using the HPCI Manual S/U for Vessel Injection Placard per 34SO-E41-001-2S. Notify Shift Supervisor when HPCI is injecting.

D. Verify that HPCI is in a standby lineup since it wasn't required to start.

References: 34SO-E41-001-2S, High Pressure Coolant Injection (HPCI) System, Rev. 21.2 pg 15,26 and58 of 63.

A. Incorrect since HPCI should have started when Drywell Pressure exceeded 1.85 psig.

B. Incorrect due to actions are required to be taken manually if an automatic action doesn't occur.

C. Correct answer.

D. Incorrect since HPCI should have started when Drywell Pressure exceeded 1.85 psig.

HPCI MANUAL S/U for VESSEL INJECTION

1. OPEN 2E41-F059
2. START Barom Cndsr Vac Pump
3. OPEN 2E41-F001
4. START Aux Oil Pump
5. OPEN 2E41-F006
6. CONFIRM TCV and TSV OPEN
7. CONFIRM 2E41-F012 CLOSES at flow > 790 gpm
8. ADJUST controller for desired flow
9. REFER to 34SO-E41-001-2S

(Posted 2H11-P601)

7.4.4 PREVENTING HPCI INJECTION TO THE RPV

CONTINUOUS

7.4.4.1 IF HPCI is NOT operating, PLACE 2E41-C002-3, HPCI Aux Oil Pump, in PULL-TO-LOCK at panel 2H11-P601.

7.4.4.2 IF HPCI is operating, perform the following:

7.4.4.2.1 DEPRESS AND HOLD the HPCI Turbine Trip push-button.

NOTE

The HPCI turbine can be confirmed stopped by local, visual observation OR by confirming 2E41-R610, turbine speed indication, has lowered to 0 RPM.

7.4.4.2.2 WHEN the HPCI turbine has stopped, PLACE 2E41-C002-3, HPCI Aux Oil Pump, in PULL-TO-LOCK.

7.4.4.2.3 WHEN HPCI TURBINE BRG OIL PRESS LOW alarm is received, RELEASE the HPCI Turbine Trip push-button.

7.2.2 CONTROL ROOM MANUAL STARTUP

CONTINUOUS

NOTES

-PRIOR to a planned non-emergency HPCI system run, the Health Physics Supervisor OR Foreman will be notified to post the necessary locations as HIGH RADIATION AREAS. These areas will be controlled during HPCI operations.

-This subsection is to be performed with the HPCI System initially in the Standby mode.

-UNLESS indicated otherwise, the following steps will be performed at panels 2H11-P601 and 2H11-P602.

-For a quick reference for starting HPCI, refer to the placard on 2H11-P601 AND in Attachment 5.

-During HPCI operation, increases in iodine and noble gas readings and a decrease in drywell-to-torus dp will occur. Fission product monitoring system alarms may be received.

CAUTION

IF SUPPRESSION POOL TEMPERATURE REACHES 95°F DURING HPCI OPERATION, ENTER 34AB-T23-003-2S, TORUS TEMPERATURE ABOVE 95°F.

7.2.2.1 OPEN 2E41-F059, Lube Oil Clg Wtr Vlv.

7.2.2.2 START 2E41-C002-2, Barom Cndsr Vacuum Pump.

7.2.2.3 Confirm the necessary locations are posted as High Radiation areas, except in an emergency situation.

13. 209001G2.4.31 001

Unit 1 is in Mode 4 with work going on that has the potential to drain the reactor vessel. "A" Core Spray and "A" RHR Loop are in a standby lineup ("B" Core Spray and "B" RHR Loop are out-of-service) when reactor vessel level starts decreasing rapidly. "A" and "C" RHR pumps fail to start but "A" Core Spray is injecting at full flow to maintain level above TAF when the following alarm actuates: "CS PUMP A OVLD/LOCKOUT RELAY TRIP" ("A" Core Spray pump remains operating).

Note: Over current condition on phase 1, 2, OR 3 of 2R22-S007, Frame 9 will energize the lockout relay (86) and cause a pump trip and annunciator.

Over current condition on phase 2, of 2R22-S007, Frame 9, but at a lower current than required to energize relay 86, will energize relay 51X and cause the annunciator only.

Which ONE of the following actions should be taken with regards to the "A" Core Spray Pump?

A. Trip "A" Core Spray Pump immediately and record the relay targets actuated.

B. Trip "A" Core Spray Pump immediately and restart when targets are reset.

C. Reduce the load on the pump until the alarm clears as soon as possible since the pump is required for Adequate Core Cooling.

D. Continue to run the pump as required until vessel level is back to the normal operating level and the vessel leak is stopped.

References: 34AR-601-108-2S Rev. 1

A. Incorrect since the pump is required for Adequate Core Cooling and the pump didn't trip when the alarm initially came in.

B. Incorrect since the pump is required for Adequate Core Cooling and the pump didn't trip when the alarm initially came in.

C. Correct answer.

D. Incorrect since the load should be reduced on the pump as soon as possible.

RO Tier:	T2G1	SRO Tier:	
Keyword:	CORE SPRAY	Cog Level:	C/A 3.3/3.4
Source:	N	Exam:	HT02301
Test:	R	Misc:	TCK

43. 209001G2.4.31 001

Unit 1 is in Mode 4 with work going on that has the potential to drain the reactor vessel. "A" Core Spray and "A" RHR Loop are in a standby lineup ("B" Core Spray and "B" RHR Loop are out-of-service) when reactor vessel level starts decreasing rapidly. "A" RHR pumps fail to start and "A" Core Spray is injecting at full flow to maintain level above TAF when the following alarm actuates: "CS PUMP A OVLD/LOCKOUT RELAY TRIP" ("A" Core Spray pump remains operating).

Which ONE of the following actions should be taken with regards to the "A" Core Spray Pump?

A. Trip "A" Core Spray Pump immediately and record the relay targets actuated.

B. Trip "A" Core Spray Pump immediately and restart when targets are reset.

C. ✓ Reduce the load on the pump until the alarm clears as soon as possible since the pump is required for Adequate Core Cooling.

D. Continue to run the pump as required until vessel level is back to the normal operating level and the vessel leak is stopped.

References: 34AR-601-108-2S Rev. 1

A. Incorrect since the pump is required for Adequate Core Cooling and the pump didn't trip when the alarm initially came in.

B. Incorrect since the pump is required for Adequate Core Cooling and the pump didn't trip when the alarm initially came in.

C. Correct answer.

D. Incorrect since the load should be reduced on the pump as soon as possible.

RO Tier:	T2G1	SRO Tier:	
Keyword:	CORE SPRAY	Cog Level:	C/A 3.3/3.4
Source:	N	Exam:	HT02301
Test:	R	Misc:	TCK

15. 209001G2.4.31 001

Unit 1 is in Mode 4 with work going on that has the potential to drain the reactor vessel. "A" Core Spray and "A" RHR Loop are in a standby lineup when reactor vessel level starts decreasing rapidly. "A" RHR pumps fail to start and "A" Core Spray is injecting at full flow to maintain level above TAF when the following alarm actuates: "CS PUMP B OVLD/LOCKOUT RELAY TRIP" ("A" Core Spray pump remains operating).

Which ONE of the following actions should be taken with regards to the "A" Core Spray Pump?

A. Trip "A" Core Spray Pump immediately and record the relay targets actuated.

B. Trip "A" Core Spray Pump immediately and restart when targets are reset.

C. Reduce the load on the pump until the alarm clears as soon as possible since the pump is required for Adequate Core Cooling.

D. Continue to run the pump as required until vessel level is back to the normal operating level and the vessel leak is stopped.

References: 34AR-601-108-2S Rev. 1

A. Incorrect since the pump is required for Adequate Core Cooling and the pump didn't trip when the alarm initially came in.

B. Incorrect since the pump is required for Adequate Core Cooling and the pump didn't trip when the alarm initially came in.

C. Correct answer.

D. Incorrect since the load should be reduced on the pump as soon as possible.

RO Tier:	T2G1	SRO Tier:	
Keyword:	CORE SPRAY	Cog Level:	C/A 3.3/3.4
Source:	N	Exam:	HT02301
Test:	R	Misc:	TCK

QUESTIONS REPORT
for HT2002

1. 209001G2.4.31 001

Unit 1 is in Mode 4 with work going on that has the potential to drain the reactor vessel. "A" Core Spray and "A" RHR Loop are in a standby lineup when reactor vessel level starts decreasing rapidly. "A" RHR pumps fail to start and "A" Core Spray is injecting at full flow to maintain level above TAF when the following alarm actuates: "CS PUMP B OVLD/LOCKOUT RELAY TRIP" ("A" Core Spray pump ~~is~~ remains operating). What actions should be taken with regards to the "A" Core Spray Pump?

A. Trip "A" Core Spray Pump immediately and record the relay targets actuated.

B. Trip "A" Core Spray Pump immediately and restart when targets are reset.

C. Reduce the load on the pump until the alarm clears as soon as possible since the pump is required for Adequate Core Cooling.

D. Continue to run the pump as required until vessel level is back to the normal operating level and the vessel leak is stopped.

References: 34AR-601-108-2S Rev. 1

A. Incorrect since the pump is required for Adequate Core Cooling and the pump didn't trip when the alarm initially came in.

B. Incorrect since the pump is required for Adequate Core Cooling and the pump didn't trip when the alarm initially came in.

C. Correct answer.

D. Incorrect since the load should be reduced on the pump as soon as possible.

1.0 IDENTIFICATION:

ALARM PANEL 601-1

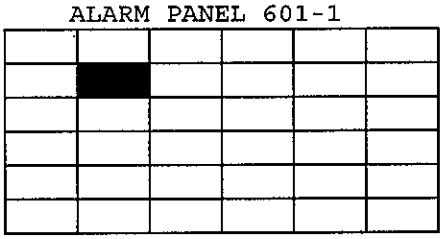

CS PUMP B

OVLD/LOCKOUT

RELAY TRIP

DEVICE:
2E21-C001B-51X
2E21-C001B-86

SETPOINT:
Relay Tripped

2.0 CONDITION:
Indicates an overload condition exists on the Core Spray Pump, 2E21-C001B.

3.0 CLASSIFICATION:
AUXILIARIES

4.0 LOCATION:
2H11-P601 Panel 601-1

5.0 OPERATOR ACTIONS:

5.1 IF the Core Spray Pump is required for core cooling and did NOT trip WHEN the annunciator alarmed, REDUCE the load (current) on the pump UNTIL the annunciator clears, as soon as possible.

5.2 IF the Core Spray pump is NOT required for core cooling, TRIP the pump.

5.3 Check 2R22-S007-FR 9 AND record the relay targets.

5.4 Refer to 30AC-OPS-003-0S, Plant Operations, for requirements on resetting a lockout relay OR relay target.

5.5 IF the Core Spray pump is required for core cooling and tripped WHEN annunciator alarmed, RESTART the pump per 34SO-E21-001-2S, Core Spray System.

6.0 CAUSES:

6.1 Over current condition on phase 1, 2, OR 3 of 2R22-S007, Frame 9 will energize the lockout relay (86) and cause a pump trip and annunciator.

6.2 Over current condition on phase 2 of 2R22-S007, Frame 9, but at a lower current than required to energize relay 86, will energize relay 51X and cause the annunciator only.

7.0 REFERENCES

H-27658, Core Spray System Elementary
thru
H-27663

8.0 TECH. SPEC./LCO:

8.1 TS 3.5.1 ECCS Operating

8.2 TS 3.5.2 ECCS Shutdown

APPROVAL:
DEPT. MGR PHW DATE 10-25-95

34AR-601-108-2S
Rev. 1

44. 209001K5.01 001

After a large pipe break inside the drywell on Unit 2, Core Spray "A" is being used to restore reactor water level to normal. The Operator notices that Core Spray "A" flow and discharge pressure are oscillating.

Which ONE of the following is the most likely cause of these indications?

A. Vortexing.

B. Pump runout.

C. Cavitation.

D. Pump running dead-headed.

References: 34A-E11-002-2S

This question was proposed by the utility. Need to get references from utility.

A. Incorrect since conditions are not present for air entrapment. The Torus is at the normal level.

B. Incorrect since Runout would have low pressure and high flow.

C. Correct answer.

D. Incorrect since deadhaeaded conditions would initially have high discharge pressure and no flow.

RO Tier:	T2G1	SRO Tier:	
Keyword:	CORE SPRAY	Cog Level:	C/A 2.6/2.7
Source:	N	Exam:	HT02301
Test:	R	Misc:	TCK

16. 209001K5.06 001

Unit 1 is in Mode 4 for a maintenance outage. The B Core Spray system is in Standby when a leak occurs and an initiation signal is received from Reactor Vessel Low Level. The pump has just started and is coming up to rated speed and flow.

Which ONE of the following is the actual pump flow when the minimum flow valve (F031) receives a CLOSE signal?

A. 700 gpm

B. 950 gpm

C. 1175 gpm

D. 1425 gpm

Reference: SI-LP-00801-00 Rev. SI-00, Fig. 1
SI-LP-00801-00 Rev. SI-00 pg 9 & 10 of 26
EO 008.002.a.05

A. Incorrect since this is the value that gives a signal to open the min flow valve as seen by the discharge flow element. It is also the same as actual pump flow.

B. Incorrect since this is the value that closes the min flow valve as seen by the discharge flow element. Since the min flow valve is fully open then there is an additional 475 gpm of actual pump flow.

C. Incorrect since this is the value when you add the min flow 475 gpm and the signal to open value of 700 gpm.

D. Correct answer. Corresponds to min flow of 475 gpm and the discharge flow element value of 950 gpm to determine actual pump flow.

RO Tier:	T2G1	SRO Tier:	
Keyword:	CORE SPRAY	Cog Level:	C/A 3.7/4.0
Source:	N	Exam:	HT02301
Test:	R	Misc:	TCK

QUESTIONS REPORT
for HT2002

1. 209001K5.06 001

The B Core Spray system is in Standby when a spurious initiation signal is received. The pump has just started and is coming up to rated speed and flow. SELECT the actual pump flow value when the minimum flow valve (F031) gets a signal to close?

A. 700 gpm

B. 950 gpm

C. 1175 gpm

D.✓ 1425 gpm

Reference: SI-LP-00801-00 Rev. SI-00, Fig. 1
SI-LP-00801-00 Rev. SI-00 pg 9 & 10 of 26
EO 008.002.a.05

A. Incorrect since this is the value that gives a signal to open the min flow valve as seen by the discharge flow element. It is also the same as actual pump flow.

B. Incorrect since this is the value that closes the min flow valve as seen by the discharge flow element. Since the min flow valve is fully open then there is an additional 475 gpm of actual pump flow.

C. Incorrect since this is the value when you add the min flow 475 gpm and the signal to open value of 700 gpm.

D. Correct answer. Corresponds to min flow of 475 gpm and the discharge flow element value of 950 gpm to determine actual pump flow.

4. Given a simplified drawing or P&ID of the Core Spray System, TRACE the flowpath from the CST Suction to the discharge into the RPV. (008.002.a.03, 008.018.a.03)

5. Given a simplified drawing or P&ID, LABEL the following Core Spray Valves: (008.001.a.03)

   a. Suppression Pool Suction Isolation Valves F019A/B
   b. Suppression Pool Suction Isolation Valves F001A/B
   c. CST Manual Suction Valve F002A/B
   d. Pump Discharge Check Valve F003/A/B
   e. Minimum Flow Valve F031A/B
   f. Test Return Valve F015 A/B
   g. Outboard Isolation Valve F004A/B
   h. Inboard Isolation Valve F005A/B
   i. Check Valve F006A/B
   j. Manual Isolation Valve F007A/B

6. Given a list of electrical buses, CHOOSE the correct electrical power source for the following Core Spray Components (008.001.a.01)

   a. Torus suction isolation valve F001A/B
   b. Outboard Injection Valve F004A/B
   c. Inboard Injection Valve F005A/B
   d. Core Spray Pumps C001 A/B

7. STATE the interlocks associated with the following Core Spray Valves: (008.002.a.05)

   a. Minimum Flow Valve F031
   b. Test By-Pass Valve F015
   c. Outboard Isolation Valve F004
   d. Inboard Isolation Valve F005

8. STATE the (2) Core Spray auto-initiation setpoints. (008.006.a.01)

9. Given plant conditions and a Core Spray initiation, STATE which Core Spray Valves will change position per 34S0-E21-001-1/2S, "Core Spray System." (008.006.a.02)

10. Given a loss of 125 VDC power to a Core Spray Pump Logic Circuit, STATE the affects of that power loss on Core Spray Operation. (008.014.a.03)

11. Given a simplified drawing or P&ID, TRACE the flowpath through the Core Spray Jockey Pump System. (008.007.a.01, 008.017.a.07)

    Given a P&ID of the Break Detection System, DESCRIBE the operation of the Core Spray Break Detection System. (200.064.a.01)

a. During cold conditions, pressure at point (2) is due to the weight of the water column within the core shroud and is applied to the High side of the dp instrument. Pressure on the Low side of the dp instrument is due to the weight of the water column in the piping from the Core Spray Header (reference leg). At these conditions the dP is essentially equal from point (2) to point (3).

b. As the plant is heated, the density of the water in the vessel decreases while the density of the reference leg is relatively unchanged. This results in less applied pressure to the High side of the dp instrument leading to a negative dp reading.

c. As core power is increased, the pressure at point 3 increases due to the restriction to flow of the steam dryers. This causes a higher applied pressure to the Low side of the dp instrument resulting in a greater negative dp reading. Higher core flows also produce a pitot effect at point (2) causing a lower pressure and resultant more negative dp indication. Nominal dp at rated power varies from approximately -1.4 to -4.5 psid, depending on which loop.

d. If a Core Spray line breaks internal to the vessel, pressure will be between points (2) and (5). There is an approximate 7 pound drop in pressure across the steam dryers (points (3) to (5)). If a break occurred, the pressure sensed on the reference leg pressure would drop 7 pounds. This change in pressure is applied to the Low pressure instrument connection and would cause dp to become less negative causing an alarm to sound in the Control Room. The alarm setpoint is about 1 psid above normal dp.

IV. System Interfaces

Not specifically addressed in this lesson.

V. Control Features & Interlocks

A. Minimum Flow Valve F031A/B

- Auto-opens on a decreasing flow of < 700 gpm.

- Auto-closes on an increasing flow of > 950 gpm.
- A restricting orifice in the min flow line passes a maximum of 475 gpm.

B. Test Bypass Valve F015A/B

- This valve is interlocked closed on a system auto initiation.

C. Outboard Isolation Valve F004A/B

- Interlocked with inboard injection valve F005A/B such that F004A/B cannot be opened with its control switch unless F005A/B is full closed (regardless of reactor pressure).
- F004A/B Automatically opens and is interlocked open if:
- 4160VAC Power is available to the pump motor **and**,
- A Core Spray auto initiation signal is received, (Reactor Water Level - 101", High Drywell 1.85 psig) **and**,
- Reactor pressure decreases below 425# (449#).

D. Inboard Injection Valve F005A/B

- Interlocked with F004A/B such that when reactor pressure is above 425 (449) psig, F005A/B cannot be opened with its control switch unless F004A/B is fully closed.
- When reactor pressure is below 425 (449) psig, it can be opened with the control switch regardless of the position of F004A/B. The F005A/B valves **will not auto close** if reactor pressure increases above 425 (449) psig.

1. F005A/B will automatically open if:

   - 4160VAC power is available to the pump motor **and**,
   - A Core Spray initiation signal is received, (Water Level -101" or Drywell Pressure 1.85 psig) **and**,
   - Reactor pressure decreases to 425 (449) psig.

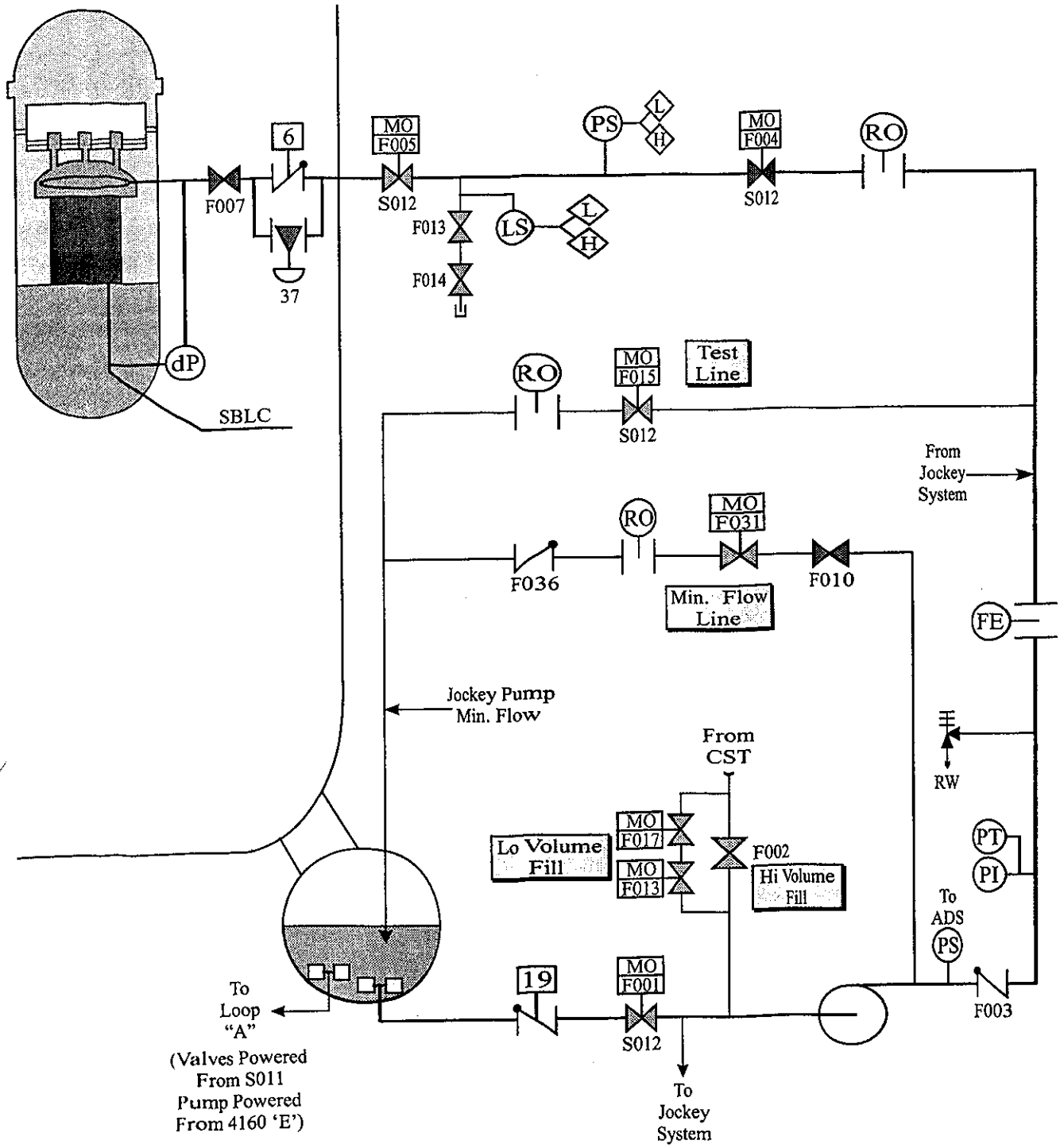

Core Spray (E21) System (Simplified Diagram)

SI-00801 FIG 1

19. 212000A3.05 001

Unit 2 is in Mode 1 at 27% RTP after a forced shutdown. The Shift Supervisor is reviewing work that was performed during the shutdown and notices that a required logic test for the SDV bypass switch was not completed. The test verifies that the Scram Signal for SDV Hi level can be reset with the switch in Bypass.

Which ONE of the following describes the effect of taking the SDV Hi Level Bypass switch to Bypass under the current plant conditions?

A. RPS would not actuate on any SDV Hi Level signal.

B. RPS would still actuate on any SDV Hi Level signal.

C. RPS would only actuate on a SDV Hi Level signal received from the Float Switches.

D. RPS would only actuate on a SDV Hi Level signal received from the RTD's.

Reference: SI-LP-01001-01 Rev. SI-01, Reactor Protection System pg 24 of 68.
Tech Spec section 3.3.1.1, RPS Instrumentation
EO 010.019.a.03

A. Incorrect since this switch has no affect on RPS with the Mode Switch in RUN.

B. Correct answer.

C. Incorrect since this switch has no affect on RPS with the Mode Switch in RUN.

D. Incorrect since this switch has no affect on RPS with the Mode Switch in RUN.

RO Tier:	T2G1	SRO Tier:	
Keyword:	SDV BYPASS	Cog Level:	C/A 3.9/3.9
Source:	N	Exam:	HT02301
Test:	R	Misc:	TCK

8. 212000A3.05 001

Unit 2 is in Mode 1 at 27% Reactor power after a forced shutdown. The Shift Supervisor is reviewing work that was performed during the shutdown and notices that a logic test for the SDV bypass switch was not signed off. The test verifies that the Scram Signal for SDV Hi level can be reset with the switch in Bypass. What would be the effect of taking the SDV Hi Level Bypass switch to Bypass under the current plant conditions?

A. RPS would not actuate on any SDV Hi Level signal.

B. RPS would still actuate on any SDV Hi Level signal.

C. RPS would only actuate on a SDV Hi Level signal from the Float Switches.

D. RPS would only actuate on a SDV Hi Level signal from the RTD's.

Reference: SI-LP-01001-01 Rev. SI-01, Reactor Protection System
Tech Spec section 3.3.1.1, RPS Instrumentation
EO 010.019.a.03

A. Incorrect since this switch has no affect on RPS with the Mode Switch in RUN.

B. Correct answer.

C. Incorrect since this switch has no affect on RPS with the Mode Switch in RUN.

D. Incorrect since this switch has no affect on RPS with the Mode Switch in RUN.

ENABLING OBJECTIVES

1. Given a list, IDENTIFY the statement that describes the control rod drive system response if the scram air header was vented. (010.015.A.02)

2. Given a list of definitions, SELECT the item which best describes the term "one-out-of-two-taken-twice." (010.011.A.04)

3. Given a list, SELECT the statement(s) which best describe the conditions necessary to Open or Close the following valves: (010.013.A.05)

   a. Scram Discharge Volume Vent and Drain and Backup Vent and Drain Valves.
   b. Scram Air Header Pilot and Backup Scram Valves.

4. Given a list of power supplies, SELECT the power supply for the Back-Up Scram Air Header Valves. (010.001.A.02)

5. Given a simplified drawing or P&ID of the Scram Air Header/Discharge Volume, IDENTIFY the valve positions and flowpaths for non-scram and scram conditions. (010.013.A.03)

6. Given a list, SELECT the statement which best describes the reason the Backup SDV Vent and Drain Valves are shut per 31RS-OPS-001-1/2S "Shutdown Outside Control Room." (010.013.A.04)

7. From a list of possible loads, SELECT the loads supplied by each RPS Bus. (010.001.A.03)

8. Given the procedure, SUMMARIZE the steps necessary to reset a half scram per 34AR-603-117(118)-1/2S "Reactor Auto Scram System A(B) Trips." (010.011.A.01)

9. Given a list, IDENTIFY the statement that describes the effect on RPS of pulling the scram solenoid fuses. (010.016.A.02)

10. Given a list, SELECT the Scrams or Rod Blocks which are bypassed with the Mode switch in RUN. (010.019.A.03)

11. Given a list, IDENTIFY the statement that describes the effect on RPS of placing the RPS Trip Test Logic Switches in TRIP. (010.022.A.02)

12. Given a list, IDENTIFY the statement that describes the effect on individual CRDMs of placing the individual control rod scram test switches in SCRAM. (010.020.A.02)

Given a simplified drawing or P&ID, TRACE the normal power supply and the alternate power supply for the RPS System. (010.001.A.04, 010.025.A.01)

- The test switch must be held in the SCRAM position until it is verified that the control rod is fully inserted.

3. The Individual Rod Scram Test switches provide an input to the scram actuation logic.

4. The Individual Rod Scram Test Switches were designed for performing scram time testing and are not intended to be used for normal rod insertion. Do not use these switches unless directed by procedure.

5. All 137 Individual Rod Scram Test switches are located on P610.

R. Scram Reset Switch (GROUP 1 4/NORMAL/GROUP 2 3)

1. The Scram Reset switch is located on P603, and provides an input into the scram reset logic.

2. The Scram Reset switch is used to reset the RPS trip systems after the trip signals have cleared.

S. SDV Isolation Test Switch (NORMAL/ISOLATE)

1. When placed in ISOLATE, contacts close to energize F008, which allows the SDV vent and drain valves to close.

2. The SDV Isolation Test Switch is located on P603.

T. SDV High Water Level Bypass Switch (NORMAL/BYPASS)

1. This keylock switch, located on P603, is used to override the SDV High Water Level Trip Signal in the automatic scram logic.

   a. This allows the operator to reset RPS, which will open the SDV vent and drain valves allowing the SDV to drain.

   b. This switch is only active when the Mode Switch is in either SHUTDOWN or REFUEL.

   c. Also, when the switch is active, placing it in the BYPASS position will give the operator a "silent" (Non-annunciated) rod out block.

Table 3.3.1.1-1 (page 2 of 3)
Reactor Protection System Instrumentation

FUNCTION	APPLICABLE MODES OR OTHER SPECIFIED CONDITIONS	REQUIRED CHANNELS PER TRIP SYSTEM	CONDITIONS REFERENCED FROM REQUIRED ACTION D.1	SURVEILLANCE REQUIREMENTS	ALLOWABLE VALUE
2. Average Power Range Monitor (continued)					
e. Two-out-of-Four Voter	1,2	2	G	SR 3.3.1.1.1 SR 3.3.1.1.10 SR 3.3.1.1.15 SR 3.3.1.1.16	NA
f. OPRM Upscale	1	3[c]	I	SR 3.3.1.1.1 SR 3.3.1.1.8 SR 3.3.1.1.10 SR 3.3.1.1.13 SR 3.3.1.1.17	NA
3. Reactor Vessel Steam Dome Pressure - High	1,2	2	G	SR 3.3.1.1.1 SR 3.3.1.1.9 SR 3.3.1.1.13 SR 3.3.1.1.15 SR 3.3.1.1.16	≤ 1085 psig
4. Reactor Vessel Water Level - Low, Level 3	1,2	2	G	SR 3.3.1.1.1 SR 3.3.1.1.9 SR 3.3.1.1.13 SR 3.3.1.1.15 SR 3.3.1.1.16	≥ 0 inches
5. Main Steam Isolation Valve - Closure	1	8	F	SR 3.3.1.1.9 SR 3.3.1.1.13 SR 3.3.1.1.15 SR 3.3.1.1.16	≤ 10% closed
6. Drywell Pressure - High	1,2	2	G	SR 3.3.1.1.1 SR 3.3.1.1.9 SR 3.3.1.1.13 SR 3.3.1.1.15	≤ 1.92 psig
7. Scram Discharge Volume Water Level - High					
a. Resistance Temperature Detector	1,2	2	G	SR 3.3.1.1.9 SR 3.3.1.1.13 SR 3.3.1.1.15	≤ 57.15 gallons
	5[a]	2	H	SR 3.3.1.1.9 SR 3.3.1.1.13 SR 3.3.1.1.15	≤ 57.15 gallons
b. Float Switch	1,2	2	G	SR 3.3.1.1.13 SR 3.3.1.1.15	≤ 57.15 gallons
	5[a]	2	H	SR 3.3.1.1.13 SR 3.3.1.1.15	≤ 57.15 gallons

(continued)

(a) With any control rod withdrawn from a core cell containing one or more fuel assemblies.

(c) Each APRM channel provides inputs to both trip systems.

SURVEILLANCE REQUIREMENTS (continued)

SURVEILLANCE		FREQUENCY
SR 3.3.1.1.13	----------NOTES---------- 1. Neutron detectors are excluded. 2. For Function 1, not required to be performed when entering MODE 2 from MODE 1 until 12 hours after entering MODE 2. ---------- Perform CHANNEL CALIBRATION.	18 months
SR 3.3.1.1.14	(Not used.)	
SR 3.3.1.1.15	Perform LOGIC SYSTEM FUNCTIONAL TEST.	18 months
SR 3.3.1.1.16	----------NOTES---------- 1. Neutron detectors are excluded. 2. For Functions 3 and 4, channel sensors are excluded. 3. For Function 5, "*n*" equals 4 channels for the purpose of determining the STAGGERED TEST BASIS Frequency. ---------- Verify the RPS RESPONSE TIME is within limits.	18 months on a STAGGERED TEST BASIS
SR 3.3.1.1.17	Verify OPRM is not bypassed when APRM Simulated Thermal Power is ≥ 25% and recirculation drive flow is < 60% of rated recirculation drive flow.	18 months

22. 215002G2.1.23 001

Unit 2 is operating at 50% RTP and a center control rod is selected for withdrawal.

Which ONE of the following statements best describes the Rod Block Monitor nulling sequence once it has been initiated?

A. The recorder is frozen and rod select matrix lights are all extinquished until the null sequence is complete. After the nulling, the recorder will read current power level.

B. The recorder will read downscale until the null sequence is complete. After the nulling, the recorder will read 100.

C. The recorder will read 100, but control rod movement will be blocked until the nulling is complete.

D. The recorder will read upscale until the null sequence is complete. After the nulling, the recorder will read 100.

References: SI-LP-01203-00 Rev. SI-00 pg 19-22 of 51
EO 012.003.e.06

A. Incorrect since the rod select matrix lights do not extinquish and the recorder will not read the current power level.

B. Correct answer.

C. Incorrect answer since the recorder will read downscale during the nulling sequence.

D. Incorrect answer since the recorder will read downscale during the nulling sequence.

RO Tier:	T2G2	SRO Tier:	
Keyword:	ROD BLOCK MONITOR	Cog Level:	MEM 3.9/4.0
Source:	B	Exam:	HT02301
Test:	R	Misc:	TCK

9. 215002G2.1.23 001

Unit 2 is operating at 50% RTP and a center control rod is selected for withdrawal. Which statement best describes the Rod Block Monitor nulling sequence?

A. When a control rod is selected, the null sequence is initiated. The recorder is frozen and rod select matrix lights are all extinquished until the null sequence is complete. After the nulling, the recorder will read current power level.

B. When a control rod is selected, the null sequence is initiated. The recorder will read downscale until the null sequence is complete. After the nulling, the recorder will read 100.

C. When a control rod is selected, the null sequence is initiated. The recorder will read 100, but control rod movement will be blocked until the nulling is complete.

D. When a control rod is selected, the null sequence is initiated. The recorder will read upscale until the null sequence is complete. After the nulling, the recorder will read 100.

References: SI-LP-01203-00 Rev. SI-00 pg 19-22 of 51
EO 012.003.e.06

A. Incorrect since the rod select matrix lights do not extinquish and the recorder will not read the current power level.

B. Correct answer.

C. Incorrect answer since the recorder will read downscale during the nulling sequence.

D. Incorrect answer since the recorder will read downscale during the nulling sequence.

4. STATE the functionional interface between the following systems and other plant systems: (012.003.D.16)
   a. LPRMs
   b. APRMs
   c. OPRMs
   d. RBM
   e. Recirculation flow units
   f. Two-out-of-Four Logic Module

5. STATE the number of LPRMs assigned to a specific APRM. (012.003.D.09)

6. Given Plant conditions, ANALYZE these conditions to DETERMINE if a Recirculation Flow unit generated Rod Block should have occurred. (012.003.F.01)

7. STATE the LPRM detector assignments to the RBM channels to include number and level for a control rod selected near the center of the core. (012.003.E.05)

8. DESCRIBE the RBM nulling sequence to include: Initiation signal to null, recorder readings during and after the null sequence, and the function of the APRM reference signal. (012.003.E.06)

9. Given the applicable electrical prints, DETERMINE the power supplies to the following: (012.003.D.12)
   a. APRM Drawer
   b. RBM Drawer
   c. APRM/RBM Recorders

10. Given plant conditions, ANALYZE those conditions to DETERMINE if an APRM generated Rod Block should have occurred. (012.003.D.02)

11. Given plant conditions, ANALYZE those conditions to DETERMINE if a RBM channel generated Rod Block should have occurred. (012.003.E.01)

12. Given plant conditions, ANALYZE those conditions to DETERMINE if a Two-out-of-Four Logic System generated reactor scram should have occurred. (012.003.D.01)

13. Given a list of plant conditions, IDENTIFY which would result in an APRM INOP trip. (012.003.D.04)

2. Recirculation Flow Processing

Table 4

The APRM instrument converts the signal from each sensor/transmitter into a voltage, digitizes it, and digitally filters the signal to remove noise. Each filtered dP signal is converted to a flow rate and scaled to a Recirculation Loop Flow signal. The two Recirculation Loop Flow signals are then combined to obtain a Total Recirculation Flow signal. The APRM instrument generates a Flow Upscale/Off-Normal alarm if the Total Recirculation Flow value is greater than or equal to 108% or if an INOP dP sensor/transmitter is detected. The RBM Instrument generates a Flow Compare alarm if any two Total Recirculation Flow values differ by an amount greater than or equal to 10%.

3. Outputs

The APRM "D" instrument provides Loop A and Loop B Flow signals for meters. The APRM "A" instrument provides Loop A and Loop B flow signals for a two-pen flow recorder. All APRM instruments provide their Recirculation Flow data to the RBM instruments via fiber-optic cables. The RBM instruments relay the flow data to the Process Computer. Flow data is available to the operator from front panels and the ODAs of the APRM and RBM instruments.

E. RBM System

Table 3
Fig 12, 13, 14, 15

The RBM System consists of two redundant channels. The primary purpose of the RBM System is to monitor for excessive power in local regions of the reactor core in which rod motion (withdrawal in particular) is taking place and to generate a control rod withdrawal block signal if excessive power is detected. The RBM System uses the processed LPRM detector data as input along with the locality of the operator-selected control rod. The PRNMs uses the RBM instrument to provide the two-way communication interface between the PRNMs and the Process Computer.

1. Inputs

Fig 16

The RBM System receives the processed LPRM detector data from the LPRM System and receives the locality of the operator-selected control rod from the Reactor Manual Control System (RMCS). The precise identity of the selected control rod is not identified by the RMCS. The actual signals received are:

a. Selected Rod Group Identity

b. No Control Rod Selected

c. Edge Control Rod Selected

d. RBM Gain Adjust Initiation/Multiple Rods Selected

The RBM bypass switch is retained and allows the operator to manually bypass either of the RBM channels but not both at the same time. The switch provides an input to each of the RBM channels.

The RBM instruments receive a variety of other data from the APRM instruments. Most of this data is not used or processed by the RBM System but is only relayed on to the Process Computer. This data includes all APRM System data, Total Recirculation Flow data from the Recirculation Flow Monitor System, OPRM System data, and other LPRM System data such as I/V plot data. The RBM instruments receive LPRM detector GAFs and other data to semi-automate the process of adjusting the gains of the LPRM detector signals and the APRM Average Neutron Flux signal.

2. RBM Processing

The RBM System processing logic incorporates the principles of the ARTS (APRM/RBM Technical Specifications) in its design.

Fig 16

The locality of the operator selected control rod is identified to the RBM Interface Module by the RMCS. The RBM Interface Module converts this data along with the information provided by the NO Rod Selected, Edge Rod Selected, and the Gain Adjust Initiation/Multiple Rods Selected signals into a multiplexed digital data signal which is serially transmitted to the RBM instrument via a wired cable. Indication of more than one rod selected causes the RBM instrument to generate a control rod block signal.

Fiber optic cables between the RBM instruments and the APRM instruments provide both RBM instruments with the data for every LPRM detector. The RBM instrument identifies the set of eight LPRM detectors in four LPRM strings which monitor the neutron flux in the locality of the selected rod. Localities near to the edge of the reactor are monitored by three or two LPRM strings. Each RBM instrument monitors half of the LPRM detector signals of the total available in the local LPRM strings. Only operative (non-bypassed) LPRM detectors are actively monitored.

The "A" level LPRMs are not used for RBM input, while all the "C" level detectors are used. This gives a truer representation of actual power around the control rod. The "B" and "D" detectors are distributed evenly between the two RBMs. Example of LPRM input to "A" RBM with a four string rod selected is 2 "B", 4 "C", and 2 "D" level LPRMs.

The RBM circuitry undergoes a nulling AND filtering sequence WHEN a rod is selected and therefore a delay of at least 5 seconds must be allowed between selection and rod movement. The monitored LPRM detector signals are averaged and gain adjusted to obtain the RBM Average Flux value. The gain adjustment value is that value necessary to produce a RBM Average Flux value of 100%. The gain adjustment value is never less than a value of one. In this way, if the local LPRM detector signals average to a value greater than 100%, the RBM Average Flux value is not scaled down to achieve 100% but rather is kept at the naturally higher value for conservatism.

Fig 17

Both RBM instruments separately receive the STP value from each of the four APRM channels. Based on this value, the RBM instrument selects one of three different RBM Average Flux Upscale setpoints or automatically bypasses itself.

Each RBM channel designates a hierarchy of normal and alternate APRM channels to use as their reference APRM channel. The alternate channels are used in hierarchical order when the preferred channels are not available. The primary reference APRM for RBM "A" is APRM "A" with first alternate as "C" APRM and the second alternate is "D" APRM. The primary reference APRM for RBM "B" is APRM "B" with first alternate as "D" APRM and the second alternate is "C" APRM.

	RBM ChannelA APRM	RBM Channel B APRM
Primary Reference --	A	B
First Alternate --	C	D
Second Alternate --	D	C

Fig 17

The RBM channel automatically bypasses itself when the reference APRM STP value is below the RBM Low Power Setpoint. The Low Trip Setpoint is active when STP is between the RBM Low Power Setpoint and the Intermediate Power Setpoint, the intermediate Trip Setpoint is active when STP is between the Intermediate Power Setpoint and the High Power Setpoint, and the High Trip setpoint is active when STP is above the High Power Setpoint. Seemingly contrary to their designations, the Low Trip Setpoint is a greater value than the Intermediate Trip Setpoint which, in turn, is a greater value than the High Trip Setpoint. This reflects the reduction of operating margin before an alarm is reached as the overall reactor power increases. The designation or name of the trip indicates the range of STP values over which the trip setpoint is active.

3. Outputs

Fig 18

The RBM instrument provides a variety of related data to its local front panel and to its remote ODA. Alarm, remote indicator, and control rod block signals are provided from the RBM Interface Panel. Included in this set of alarm signals is the Total Recirculation Flow Compare Alarm.

'able 4

4. Setpoints

a. RBM Alarm Setpoints

- Upscale High Alarm 105.5%
- Upscale Int. Alarm 109.3%
- Upscale Low Alarm 115.1%
- Downscale Alarm 95.0%

b. RBM Power Setpoints

- High Power Setpoint 82.0%
- Int. Power Setpoint 62.0%
- Low Power Setpoint 27.0%

23. 215003A4.05 001

Unit 1 is in the process of starting up after a Refueling outage. The plant has just entered Mode 1 and the Reactor Operator notes the following IRM readings: (shorting links are installed)

IRM A	110/125	IRM B	112/125
IRM C	Bypassed	IRM D	114/125
IRM E	114/125	IRM F	116/125
IRM G	112/125	IRM H	110/125

Based on these readings which ONE of the following describes the affect on the plant?

A. A half scram should have occurred due to an IRM above the Hi-Hi limit.

B. A full scram should have occurred due to an IRM above the Hi-Hi limit with shorting links installed.

C. A Rod Block should have occurred due to all IRMs above rod block setpoint.

D. No affect on the plant since all of the IRM inputs are bypassed.

References: SI-LP-01202 Rev. 01 pg 21 - 23 of 40
EO 012.003.c.09, 012.003.c.10, 012.003.c.11

A. Incorrect since the IRM scram signal is bypassed with Mode Switch in RUN.

B. Incorrect since the IRM scram signal is bypassed with Mode Switch in RUN and with the shorting links installed this prevents the single IRM scram function.

C. Incorrect since the rod blocks are bypassed with the Mode Switch in RUN.

D. Correct answer.

RO Tier:	T2G1	SRO Tier:	
Keyword:	IRM	Cog Level:	C/A 3.4/3.4
Source:	N	Exam:	HT02301
Test:	R	Misc:	TCK

10. 215003A4.05 001

Unit 1 is in the process of starting up after a Refueling outage. The plant has just entered Mode 1 and the Reactor Operator notes the following IRM readings: (shorting links are installed)

IRM A	110/125	IRM B	112/125
IRM C	Bypassed	IRM D	114/125
IRM E	114/125	IRM F	116/125
IRM G	112/125	IRM H	110/125

Based on these readings CHOOSE the answer that describes the affect on the plant.

A. A half scram should have occurred on "B" channel due to IRM F above Hi-Hi limit.

B. A full scram should have occurred due to IRM F above Hi-Hi limit with shorting links installed.

C. A Rod Block should have occurred due to all IRMs above rod block setpoint.

D. No affect on the plant since all of the IRM inputs are bypassed.

References: SI-LP-01202 Rev. 01 pg 21 - 23 of 40
EO 012.003.c.09, 012.003.c.10, 012.003.c.11

A. Incorrect since the IRM scram signal is bypassed with Mode Switch in RUN.

B. Incorrect since the IRM scram signal is bypassed with Mode Switch in RUN and with the shorting links installed this prevents the single IRM scram function.

C. Incorrect since the rod blocks are bypassed with the Mode Switch in RUN.

D. Correct answer.

5. From a list of statements, SELECT the statement that describes the operation of the following IRM Controls. (012.003.c.06)
   a. IRM Drive In/Out Controls
   b. IRM Bypass Switches

6. From a list of statements, SELECT the statement that describes the basic process by which an IRM fission chamber detects neutrons. (012.003.c.07)

7. Given Plant conditions, ANALYZE these conditions to DETERMINE if an IRM generated Rod Block should have occurred. (012.003.c.09)

8. Given Plant conditions, ANALYZE these conditions to DETERMINE if an IRM generated Reactor Scram should have occurred. (012.003.c.10)

9. Given Plant conditions, ANALYZE these conditions to DETERMINE if an IRM automatic bypass should have occurred. (012.003.c.11)

10. Given the applicable electrical prints, DETERMINE the power supplies to the following: (012.003.c.15)
    a. IRMs
    b. IRM Recorders

11. Given a list of IRM components, a simplified IRM schematic and Plant conditions where an IRM has failed the overlap check between ranges 6 and 7, SELECT the component which has the highest probability of causing this failure. (012.010.a.02)

12. From a list, SELECT the statement which describes the operation of the Range Switches. (012.010.a.03)

13. From a list, SELECT the statement which describes the location of IRM system control switches, recorders and indicators in the main control room. (012.003.h.01)

d. Downscale

- IRM reading of 10/125 scale or less.

The IRM downscale is bypassed if:

1) The Reactor Mode Switch is in RUN,

OR

2) The IRM Channel is bypassed,

OR

3) The IRM Channel Range Switch on Range 1.

Fig 12

3. Scrams

a. Drawer Inoperative

1) High Voltage Power Supply output is low.

2) Local Function Switch is out of OPERATE.

3) When a module is unplugged in the IRM Drawer.

The IRM Srcam is bypassed if:

1) The IRM Channel is bypassed,

OR

2) The Reactor Mode Switch is in RUN,

b. Upscale Trip (High - High)

IRM reading of 115/125 of scale or more.

The IRM Hi-Hi Scram function is bypassed if:

1) The IRM Channel is bypassed,

OR

2) The Reactor Mode Switch is in RUN,

4. Interlocks

Fig 13

a. SRM Retract Permissive Interlock

1) This is an interlock between the following:

a) The SRM count rate (less than 5 cps).

b) The SRM Detector position (not full in).

c) The IRM Range Switches

2) The interlock <u>does not stop</u> detector movement.

3) The interlock causes a rod block if the following conditions are not met:

a) The SRM Detector FULL IN,

<u>OR</u>

b) The SRM count rate above 200 cps,

<u>OR</u>

c) All IRM Range Switches on RANGE 3 or above,

<u>OR</u>

d) Reactor Mode Switch in RUN.

NOTE: IRMs A, C, E and G must be on range 3 or above to bypass SRM A and C Rod Blocks (IRMs B, D, F, and H to bypass SRM B and D)

b. All SRM Rod Blocks are bypassed if All IRM Range Switches are on Range 8 or above.

NOTE: IRMs A, C, E and G must be on range 8 or above to bypass SRM A and C Rod Blocks (IRMs B, D, F, and H to bypass SRM B and D)

24. 215004K2.01 001

While operating at 94% RTP on Unit 2, an event causes the following conditions:

Loss of Rx Bldg Vent Monitor B
Loss of Service Water Effluent Monitor
Loss of Stack Gas Monitor B
IRMs B, D, F and H reading downscale
SRMs B and D reading downscale

Which ONE of the following events is indicative of these indications?

A. Loss of Instrument Bus 2B

B. Loss of 24/48 VDC Bus 2B

C. Loss of Vital AC Bus

D. Loss of 125/250 VDC Bus "B"

References: SI-LP-01202 Rev. 01 pg 15 of 40
SI-LP-01201 Rev. SI-00 pg 11 of 30
LT-LP-02704 Rev. 03 pg 59 of 61
LO 012.003.a.09

A. Incorrect since this does not power the listed items.

B. Correct answer.

C. Incorrect since this does not power the listed items.

D. Incorrect since this does not power the listed items.

RO Tier:	T2G1	SRO Tier:	
Keyword:	SRM	Cog Level:	MEM 2.6/2.8
Source:	N	Exam:	HT02301
Test:	R	Misc:	TCK

11. 215004K2.01 001

While operating at 94% RTP on Unit 2, an event causes the following conditions:

Loss of Rx Bldg Vent Monitor B
Loss of Service Water Effluent Monitor
Loss of Stack Gas Monitor B
IRMs B, D, F and H reading downscale
SRMs B and D reading downscale

SELECT the event indicative of these indications:

A. Loss of Instrument Bus 2B

B. Loss of 24/48 VDC Bus 2B

C. Loss of Vital AC Bus

D. Loss of 125/250 VDC Bus "B"

References: SI-LP-01202 Rev. 01 pg 15 of 40
SI-LP-01201 Rev. SI-00 pg 11 of 30
LT-LP-02704 Rev. 03 pg 59 of 61
LO 012.003.a.09

A. Incorrect since this does not power the listed items.

B. Correct answer.

C. Incorrect since this does not power the listed items.

D. Incorrect since this does not power the listed items.

TABLE 2
LOADS OFF DC DISTRIBUTION SYSTEMS

24/48V DC Cabinet A (R25-S015)

SRMs A and C

IRMs A, C, E, and G

Reactor Bldg. Vent Monitor A

Stack Monitor A

Flux Tilt Monitor

24/48 DC Cabinet B (R25-S016)

SRMs B and D

IRMs B, D, F, and H

Reactor Bldg. Vent Monitor B

Stack Monitor B

Radwaste Effluent Monitor

Service Water Effluent Monitor

RBCCW Monitor

6. Given the applicable electrical prints, DETERMINE the power supplies to the following: (012.003.a.09)

   a. Source Range Monitors
   b. Source Range Recorders

7. DESCRIBE the operation of the following SRM controls and indications (012.003.a.06)

   a. SRM Drive in/Drive out controls
   b. SRM Meters/Recorders (cps) P603/P606
   c. SRM Period Indication P603/P606
   d. SRM Bypass Switch
   e. SRM upscale/downscale indication

8. Given plant conditions, ANALYZE these conditions to DETERMINE if an SRM generated Rod Block should have occurred. (012.003.a.10)

9. Given plant conditions, ANALYZE these conditions to DETERMINE if an SRM generated reactor scram should have occurred. (012.003.a.11)

10. Given plant conditions, ANALYZE these conditions to DETERMINE if an SRM bypass should have occurred. (012.003.a.12)

IV. System Interfaces

A. SRM Power Supplies

1. Source Range Monitors

   - Channels A & C - 24/48 VDC Cabinet 2A, 2R25-S015.
   - Channels B & D - 24/48 VDC Cabinet 2B, 2R25-S016.

2. Source Range Monitor Recorders - Vital AC, 2R25-S063

3. Drive Mechanisms

   a. Indication and Control - (120 VAC) 208/120 VAC PNL, 2R25-S101 (1R25-S125)

   b. Motor module (208 VAC) - 208/120 VAC PNL, 2R25-S101 (1R25-S125)

B. Reactor Protection System

The Source Range Monitors provide input to the RPS system which can cause a SCRAM signal on a SRM high flux signal. This signal is normally bypassed by installing shorting links and is used only during refueling.

C. Reactor Manual Control System (RMCS)

Signals to the RMCS from the Source Range prevent rod withdrawal at various SRM levels and operational conditions.

2. Power is supplied at +24 VDC and -24 VDC to the input of a regulator circuit that produces a constant +15 VDC and -15 VDC for input to the high voltage power supply.

3. The power supply output is 100 VDC for application to the detector. A voltage sensing circuit is used to detect decreases in the output voltage and provide a Low High Voltage Trip signal to the Drawer Inop circuit.

IV. System Interfaces

A. Electrical Power Systems

1. IRMs powered from 24/48 VDC.

   a. IRMs A, C, E, and G - 24/48 VDC Cabinet 2A (2R25-S015)

   b. IRMs B, D, F, and H - 24/48 VDC Cabinet 2B (2R25-S016)

2. IRM Detector Drive Motors are powered by 208/120 VAC PNL (2R25-S101).

3. IRM recorders powered from Vital AC (2R25-S063).

B. Instrument and Control Systems.

1. Reactor Manual Control System

   - Rod Blocks

2. Reactor Protection System

   - Scrams

3. Source Range Monitors

   a. SRM Detector retract permit and downscale Rod Blocks are bypassed when IRMs are on Range 3 or above.

   b. All SRM Rod Blocks are bypassed when IRMs are on Range 8 or above.

37. 239002K6.05 001

A Safety/Relief Valve tailpipe vacuum breaker has failed in the "OPEN" position.

Which ONE of the following describes the effect on containment and the Safety/Relief Valve if the relief valve with the failed vacuum breaker lifts?

A. Drywell pressure would increase before Torus pressure during the time the relief valve was open and the relief valve would operate normally.

B. Torus pressure would increase before Drywell pressure during the time the relief valve was open and the relief valve would operate normally.

C. Drywell pressure would not be affected during the time the relief valve was open and the relief valve would open at a lower pressure.

D. Torus pressure would not be affected during the time the relief valve was open and the relief valve would open at a higher pressure.

References: FSAR Section 6.2

A. Correct answer.

B. Incorrect since the vacuum breakers are physically located in the Drywell.

C. Incorrect since Drywell pressure will increase when the relief valve is open due to the location of the vacuum breaker.

D. Incorrect since Torus pressure would increase after Drywell pressure increases due to the location of the vacuum breakers.

RO Tier:	T2G1	SRO Tier:	
Keyword:	RELIEF VALVE	Cog Level:	C/A 2.7/3.0
Source:	N	Exam:	HT02301
Test:	R	Misc:	TCK

12. 239002K6.05 001

CHOOSE the statement below that best describes the effect on containment and the Safety Relief Valves if a relief valve lifts with the tailpipe vacuum breaker failed in the "OPEN" position.

A. Drywell pressure would increase before Torus pressure during the time the relief valve was open and the relief valve would operate normally.

B. Torus pressure would increase before Drywell pressure during the time the relief valve was open and the relief valve would operate normally.

C. Drywell pressure would not be affected during the time the relief valve was open and the relief valve would open at a lower pressure.

D. Torus pressure would not be affected during the time the relief valve was open and the relief valve would open at a higher pressure.

References: FSAR Section 6.2

A. Correct answer.

B. Incorrect since the vacuum breakers are physically located in the Drywell.

C. Incorrect since Drywell pressure will increase when the relief valve is open due to the location of the vacuum breaker.

D. Incorrect since Torus pressure would increase after Drywell pressure increases due to the location of the vacuum breakers.

Symbol	Description
h_E	entrance enthalpy
g_c	gravitational constant
m_∞	mass flowrate at steady state
t_v	ramp time
t	time
k	ratio of specific heat at constant pressure to specific heat at constant volume
P_E	entrance pressure
P_O	stagnation pressure
ρ_O	stagnation density
V_t	throat velocity
C	velocity of sound at throat conditions
L_{EQ}	equivalent length
Z_P	arbitrary length defining wave boundary interface with water slug
V_p	velocity of point defined by Z_P
P_R	receiver pressure
ρ_L	liquid density

The SRV discharge line vacuum breakers are designed to have sufficient capacity to preclude the siphoning of water from the torus into the discharge line after an SRV cycle.

The required capacity was determined by assuming instantaneous condensation of the steam in the discharge line and requiring equalization of pressure between the discharge line and the drywell within 2 s.

A modified Darcy formula was used to select a valve having a larger capacity than required under existing parameters.

6.2.1.2.2 Secondary Containment System

The reactor building is designed to minimize the ground-level release of airborne radioactive material and permit the controlled elevated release of the building atmosphere. A discussion of reactor building design is provided in paragraph 3.8.4.1.

Portions of the reactor building provide secondary containment when the primary containment is closed and in service, and primary containment when the primary containment is open, as it is during refueling. The reactor building houses the following:

- Refueling and reactor servicing equipment.
- New and wet spent-fuel storage facilities.

40. 256000K1.05 001

Unit 2 is operating at 80% RTP. An operator inadvertently opens the Unit 2 Condensate Suction Pressure Control Valve "Bypass Valve" (*2N21-F182, Condensate Supply to CRD*).

Which ONE of the following describes the probable consequences which will occur because of this action?

A. Opening 2N21-F182 could result in excessive condensate system losses via recirc flow back to the CST through the CRD suction line from the CST.

B. Opening 2N21-F182 increases the NPSH to the CRD pump which could result in the CRD pump discharge pressure exceeding its design pressure limit of 1510 psig.

C. Opening 2N21-F182 may result in excessively high CRD pump suction pressure which could cause overpressurization of the CRD suction piping if the suction relief valve capacity is exceeded.

D. The CRD pump suction pressure trip is set such that the pump will trip above 18" Hg Vac; opening 2N21-F182 will cause the pump suction pressure trip to activate.

References: LT-LP-00101-00 Rev. 04 pg. 14 of 28
EO 001.005.a.07

A. Incorrect since water is prevented from going back to the CST by a check valve.

B. Incorrect since there are other means of preventing the CRD system from reaching its design pressure limit.

C. Correct answer.

D. Incorrect since the CRD pumps trip on low suction pressure.

RO Tier:	T2G2	SRO Tier:	
Keyword:	CRD SUCTION	Cog Level:	C/A 3.1/3.1
Source:	B	Exam:	HT02301
Test:	R	Misc:	TCK

QUESTIONS REPORT
for HT2002

1. 256000K1.05 001

Unit 2 is operating at 80% RTP. An operator opens the Unit 2 Condensate Suction Pressure Control Valve "Bypass Valve" (2N21-F182, Condensate Supply to CRD). DETERMINE the probable consequences which will occur because of this action:

A. Opening 2N21-F182 could result in excessive condensate system losses via recirc flow back to the CST through the CRD suction line from the CST.

B. Opening 2N21-F182 increases the available NPSH to the CRD pump which could result in the CRD pump discharge pressure exceeding its design pressure limit of 1510 psig.

C. Opening 2N21-F182 may result in excessively high CRD pump suction pressure which could cause overpressurization of the CRD suction piping if the suction relief valve capacity is exceeded.

D. The CRD pump suction pressure trip is set such that the pump will trip above 18" Hg Vac; opening 2N21-F182 will cause the pump suction pressure trip to activate.

References: LT-LP-00101-00 Rev. 04 pg. 14 of 28
EO 001.005.a.07

A. Incorrect since water is prevented from going back to the CST by a check valve.

B. Incorrect since there are other means of preventing the CRD system from reaching its design pressure limit.

C. Correct answer.

D. Incorrect since the CRD pumps trip on low suction pressure.

g. CRD Pump suction pressure should be 5 to 40 psig from the CST, and 20 to 40 psig from the Condensate system.

2. Precautions for System Operation

Point out to the students that the CRD suction piping **does** have a relief valve, but that you could exceed the relief capacity of the valve and overpressurize the
EO 14
piping by opening the 2N21-F182. Also point out that when the relief valve lifted you would be sending condensate water to the reactor building sump.

a. Starting a CRD pump with seal purge lined up to an isolated Recirc or RWCU pump will result in overpressurization of the Recirc Loop or RWCU pump.

b. CRD Suction from Condensate Control Valve Bypass Valve, 2N21-F182, must remain locked closed when the Condensate System is in service. Opening this valve could result in overpressurization of the CRD suction piping.

GE states that approximately 0.75 gal is displaced from each HCU to begin the scram inward motion.
EO 15
C11-F034 is throttled 3 turns open on Unit 2 and 2 turns open on Unit 1 to prevent the CRD pump from tripping on overcurrent
EO 16
during a scram. Thus, the flow via the charging water header during a scram is about 95 gpm with one pump operating. With two pumps operating, flow only increased to about 105 gpm.
EO 17

c. Cooling Water Differential Pressure must not exceed 25 psi to prevent rods from drifting in.

d. If system flow exceeds 68 gpm, cooling flow will exceed 68 gpm also; and could result in drifting control rods *if the return to vessel is isolated.*

e. Opening Insert Riser Isolation Valve EP-101 PRIOR to opening both the Scram Discharge Volume Isolation Valve, EP-112, or the Withdraw Riser Isolation Valve, EP-102, can result in severe damage to the CRD mechanism internals if a Scram occurs.

f. Isolating an HCU during reactor operation may result in damage to the CRD seals due to overheating. The HCU may only be isolated for a maximum of 8 hours during operational condition 1. After 8 hours, cooling must be restored or Scram Testing must be done.

EO 19

3. Starting a CRD Pump Following a LOCA

To restart a CRD pump following a LOCA the following steps must be completed:

11. Given a list of HCU parameters, SELECT the parameters which will cause a "CRD Accumulator Press Low or Level High" annunciator. (001.016.a.01)

12. IDENTIFY which CRD pump can be controlled from the Unit 2 Remote Shutdown Panel. (001.023.a.01)

13. Given a list of CRD pump trips, SELECT which trips are bypassed when the pump is being controlled from the Remote S/D Panel(s). (001.023.a.02)

14. STATE what damage may occur to the Unit 2 CRD system if the Condensate Control Valve Bypass Valve (2N21-F182) is opened with the Condensate System in service, per 34SO-C11-005-2S, "Control Rod Drive Hydraulic System." (001.005.a.07)

15. STATE the possible consequences of allowing Cooling Water Flow to exceed 68 GPM per 34SO-C11-005-2/1S, "Control Rod Drive Hydraulic System." (001.005.a.11)

16. STATE the reason for opening the Scram Discharge Volume Isolation Valve (F112) prior to opening the Insert Riser Isolation Valve (F101) per 34SO-C11-005-2/1S "Control Rod Drive Hydraulic System." (001.002.a.04)

17. STATE the potential detrimental effects to the CRD mechanism if the HCU is totally isolated. (001.004.a.02)

18. Given a list of statements, SELECT the statement which best describes the CRD system response to a Reactor SCRAM. (001.013.a.07)

19. STATE the steps necessary to start a CRD pump after a LOCA per 34AR-603-128-2/1S, "CRD Pump "A" Breaker Trip." (001.005.a.12)

20. Given a simplified drawing or P&ID of the CRD system, IDENTIFY the flowpath used to maximize flow per 34SO-C11-005-2/1S, "Control Rod Drive Hydraulic System". (001.032.a.02)

21. Given a list of statements, SELECT the statement which best describes the function of the ARI system. (010.024.a.01)

22. Given a simplified drawing or P&ID of the SCRAM air header, IDENTIFY the ARI Solenoid vent valves. (010.024.a.05)

23. Given a list, SELECT the ARI auto initiation setpoints. (010.024.a.02)

41. 259001K1.05 001

Which ONE of the following describes the sequence of components that condensate would pass through to get from the Main Condenser to the Reactor Vessel?

A. Condensate Booster Pumps, Gland Seal Condenser, Condensate Pumps, 10th Stage Feedwater Heaters, Reactor Feed Pumps.

B. Condensate Pumps, Condensate Booster Pumps, Condensate Demins, Reactor Feed Pumps, 4th Stage "A" Heater.

C. Condensate Pumps, Gland Seal Condenser, Condensate Booster Pumps, 6th Stage Feedwater Heater, Reactor Feed Pumps.

D. Condensate Pumps, 4th Stage "A" Heater, 6th Stage Feedwater Heater, Reactor Feed Pumps, Feedwater Level Control Valves.

References: SI-LP-00201 Rev. SI-00 Figure 01

A. Incorrect since the Condensate Pumps come before the Condensate Booster Pumps.

B. Incorrect since Condensate Demins come before the Condensate Booster Pumps.

C. Correct answer.

D. Incorrect since 6th stage heater comes before the 4th stage heater.

RO Tier:	T2G1	SRO Tier:	
Keyword:	CONDENSATE	Cog Level:	MEM 3.2/3.2
Source:	N	Exam:	HT02301
Test:	R	Misc:	TCK

14. 259001K1.05 001

CHOOSE the correct sequence of components that condensate would pass through to get from the Main Condenser to the Reactor Vessel.

A. Condensate Booster Pumps, Gland Seal Condenser, Condensate Pumps, 10th Stage Feedwater Heaters, Reactor Feed Pumps.

B. Condensate Pumps, Condensate Booster Pumps, Condensate Demins, Reactor Feed Pumps, 4th Stage "A" Heater.

C. SJAE Inter Condenser, Gland Seal Condenser, Condensate Booster Pumps, 6th Stage Feedwater Heater, Reactor Feed Pumps.

D. Condensate Pumps, 4th Stage "A" Heater, 6th Stage Feedwater Heater, Reactor Feed Pumps, Feedwater Level Control Valves.

References: SI-LP-00201 Rev. SI-00 Figure 01

A. Incorrect since the Condensate Pumps come before the Condensate Booster Pumps.

B. Incorrect since Condensate Demins come before the Condensate Booster Pumps.

C. Correct answer.

D. Incorrect since 6th stage heater comes before the 4th stage heater.

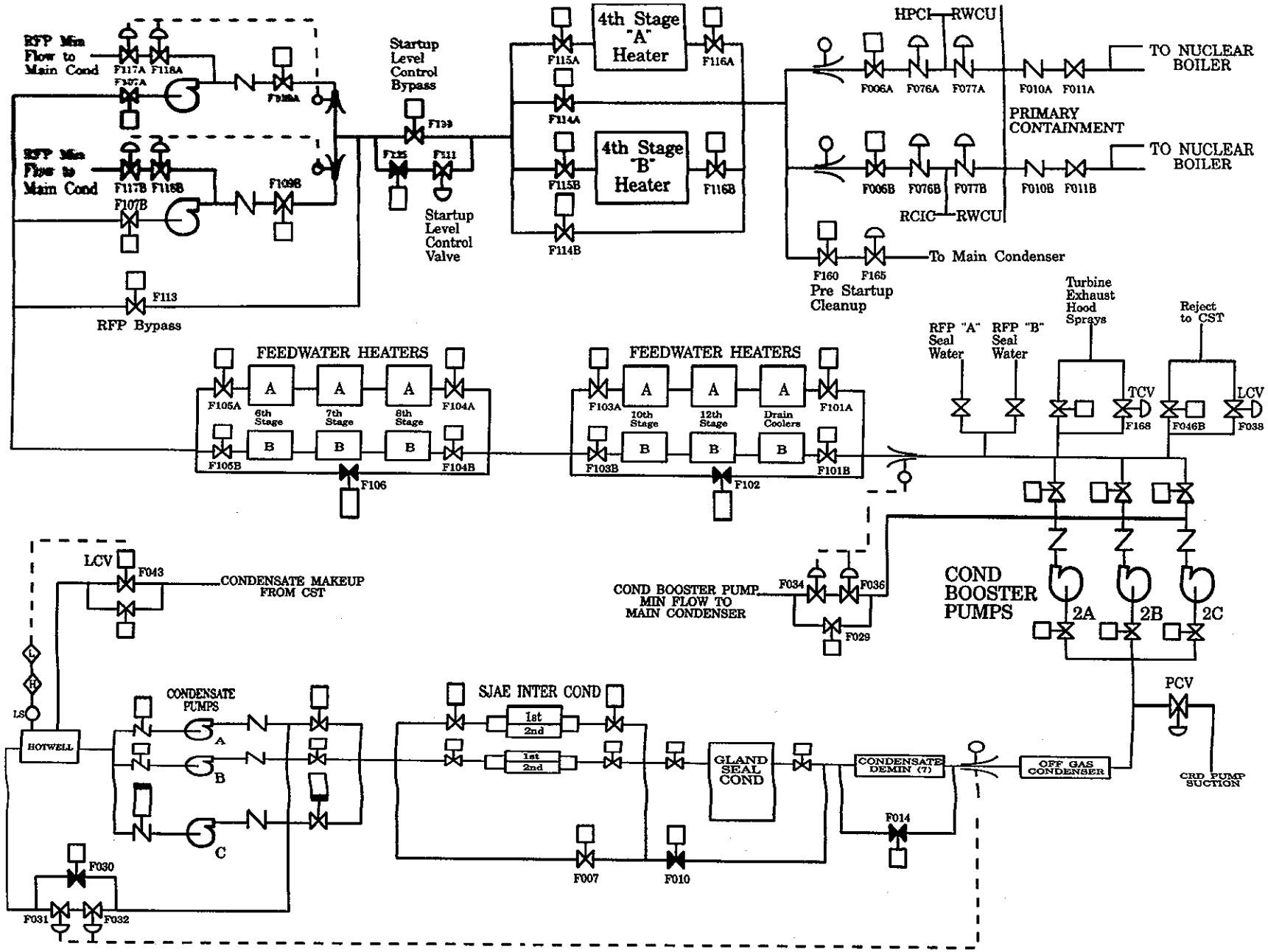

CONDENSATE and FEEDWATER System

LT-00201 Fig 01
Feed and Condensate System

14. 264000A1.01 001

The 2A Emergency Diesel Generator is running loaded and tied to the bus for the normal Monthly load test. While adjusting the load to maintain between 1710 and 2000 KW the D/G trips. The following conditions existed at the time of the trip:

Engine Speed	980 RPM
Lube Oil Pressure	22 psig
Lube Oil Temp	240°F
Jacket Water Temp	200°F
Jacket Water Pressure	14 psig

Which ONE of the following is the most likely cause of the D/G trip?

A. Engine Overspeed.

B. High Jacket Water Temp.

C. Low Lube Oil Pressure.

D. High Lube Oil Temperature.

References: LT-LP-02801-03 Rev. 03 pg 43 and 44 of 87
EO 028.023.a.02
34SO-R43-001-2

A. Incorrect since this is below the setpoint of 1000 ± 10 RPM.

B. Incorrect since the setpoint for High Jacket Water Temp Trip is 205 F.

C. Incorrect since the setpoint for the Low Lube Oil Pressure trip is 21 psig decreasing.

D. Correct answer.

RO Tier:	T2G1	SRO Tier:	
Keyword:	DIESEL GENERATOR	Cog Level:	C/A 3.0/3.0
Source:	N	Exam:	HT02301
Test:	R	Misc:	TCK

46. 264000A1.01 001

The 2A Emergency Diesel Generator is running loaded and tied to the bus for the normal Monthly load test. While adjusting the load to maintain between 1710 and 2000 KW the D/G trips. The following conditions existed at the time of the trip:

Engine Speed	980 RPM
Lube Oil Pressure	20 psig
Lube Oil Temp	240°F
Jacket Water Temp	200°F
Jacket Water Pressure	14 psig

Which ONE of the following is the most likely cause of the D/G trip?

A. Engine Overspeed.

B. High Jacket Water Temp.

C. Low Lube Oil Pressure.

D. ✓ High Lube Oil Temperature.

References: LT-LP-02801-03 Rev. 03 pg 43 and 44 of 87
EO 028.023.a.02

A. Incorrect since this is below the setpoint of 1000 ± 10 RPM.

B. Incorrect since the setpoint for High Jacket Water Temp Trip is 205 F.

C. Incorrect since the setpoint for the Low Lube Oil Pressure trip is 18 psig decreasing.

D. Correct answer.

RO Tier:	T2G1	SRO Tier:	
Keyword:	DIESEL GENERATOR	Cog Level:	C/A 3.0/3.0
Source:	N	Exam:	HT02301
Test:	R	Misc:	TCK

QUESTIONS REPORT
for HT2002

1. 264000A1.01 001

The 2A Emergency Diesel Generator is running loaded to the bus for the normal Monthly load test. While adjusting the load to maintain between 1710 and 2000 KW the D/G trips. The following conditions existed at the time of the trip:

Engine Speed	980 RPM
Lube Oil Pressure	20 psig
Lube Oil Temp	231 F
Jacket Water Temp	200 F
Jacket Water Pressure	14 psig

What is the most likely cause of the D/G trip?

A. Engine Overspeed.

B. High Jacket Water Temp.

C. Low Lube Oil Pressure.

D. High Lube Oil Temperature.

References: LT-LP-02801-03 Rev. 03 pg 43 and 44 of 87
EO 028.023.a.02

A. Incorrect since this is below the setpoint of 1000 ± 10 RPM.

B. Incorrect since the setpoint for High Jacket Water Temp Trip is 205 F.

C. Incorrect since the setpoint for the Low Lube Oil Pressure trip is 18 psig decreasing.

D. Correct answer.

NOTE: On loss of power to the respective bus the D/G output breaker will close after the bus undervoltage 86 relay trips and diesel comes up to speed. (An additional one-second time delay is provided to allow the alternate power supply breaker an opportunity to close.) On Reactor Water Level Low or High Drywell Pressure the output breaker remains open.

Table 04

C. Trips

EO 7

1. The following four conditions will trip the diesel generator at anytime:

   a. Low Lube Oil Pressure

      1) 18 psig decreasing

      2) Armed 20 sec after D/G startup

   b. Engine Overspeed (1000 ± 10 RPM)

   c. Engine Start Failure

      Less then 250-RPM and 6 psig lube oil pressure within 7 sec of attempted start.

   d. Differential Lockout

EO 7

2. The following additional six conditions will trip the D/G if the TEST circuit is energized.

   a. Lube Oil Temperature High (230°F)

   b. Jacket Water Temperature High (205°F)

   c. Jacket Water Pressure Low

      1) 12 psig decreasing

      2) Armed 20 sec after D/G startup

   d. Crankcase Pressure High

1) 0.5" H_2O

2) Armed 20 sec after D/G startup

e. Generator Reverse Power

- Trips the Differential Lockout

f. Local trip pushbutton or remote stop switch.

Armed when

1) D/G output breaker is open and

2) No automatic initiation signal is present.

EO 8

3. Two additional methods for securing the D/G in the D/G room:

a. Push "Emergency Stop" pushbutton on the diesel generator to trip the fuel racks.

b. Turn Load Limit Knob on the D/G Governor to "0" provides an electrical signal to shut off the fuel supply.

D. Interlocks

EO 9

1. Interlocks for the diesel generator output breaker

NOTE: With both breakers opened the 86 lockout opens before the diesel output breaker closes to prevent inadvertent paralleling.

a. With diesel generator mode switch in NORMAL the D/G output breaker will close provided the following exist:

1) Emergency 4160V bus undervoltage (86 relay)

2) Proper D/G frequency

3) Proper D/G voltage

5. Following a control room evacuation, DETERMINE if additional Load may be added to an operating diesel. (028.028.a.01)

6. Given Plant parameters, DETERMINE if the D/Gs should have auto-started per 34SO-R43-001-1/2S, "Diesel Generator Standby AC System." (028.025.a.01)

7. Given D/G parameters, DETERMINE if the D/G should have tripped per 34SO-R43-001-1/2S, "Diesel Generator Standby AC System." (028.023.a.02)

8. From a list, SELECT the available means to locally shutdown a D/G. (028.022.a.03)

9. From a list of statements, SELECT the statement which best describes the conditions necessary for an D/G to auto-tie to an emergency bus per 34SO-R43-001-1/2S, "Diesel Generator Standby AC System." (028.006.a.01)

10. From a list, SELECT the (6) system responses that occur when the D/G mode switch is placed in "TEST" according to 34SO-R43-001-1/2S, "Diesel Generator Standby AC System." (028.023.a.04)

11. From a list of statements, SELECT the statement which best describes the Plant response if an D/G mode switch is in "TEST" and the following occurs. (028.023.a.10)

    a. LOSP
    b. LOCA
    c. Loss of respective 4160 VAC Emergency Bus

12. Given Plant conditions for Units 1 and 2, IDENTIFY which unit the "1B" D/G will tie to for any specified combination of LOSP, LOCA or position of the "D/G Unit Select Switch." (028.025.a.04)

13. From a list of cooling water supplies, SELECT the D/G sources of cooling water. (028.023.a.05)

14. From a list, SELECT the proper loading sequence for any 4160 VAC Emergency bus after the D/G starts and the following conditions exist: (028.025.a.02)

    a. LOSP
    b. LOCA/LOSP

45. 264000K3.01 001

Unit 1 has experienced a LOCA with a LOSP. Emergency Diesel Generators "1A" and "1B" are running with their output breakers closed. Emergency Diesel Generator "1C" has failed to start. Approximately 25 seconds after EDG "1A" and "1B" receive the start signal you notice the following pump status:

Pumps Running	Pumps Idle
"1A" Core Spray Pump	"1A" PSW Pump
"1C" RHR Pump	"1B" PSW Pump
	"A, B and D" RHR Pumps
	"1B" Core Spray Pump

Which ONE of the following describes the pumps that you would expect to be operating for this condition?

A. PSW pump "1A" should also be running.

B. "A" and "D" RHR pumps should also be running.

C. "A", "B" and "D" RHR pumps should also be running.

D. "B" Core Spray, "A" and "D" RHR pumps and "1A" PSW pump should also be running.

References: LT-LP-02801 Rev. 03, pg 49-50 of 87
EO 028.025.a.02

A. Incorrect since the PSW pumps are load-shed upon an auto start of the D/G.

B. Correct answer.

C. Incorrect since "B" RHR pump is powered from the 1C D/G which has failed.

D. Incorrect since "B" Core Spray is powered from 1C D/G which has failed and the "1A" PSW pump should not have started.

RO Tier:	T2G1	SRO Tier:	
Keyword:	DIESEL GENERATOR	Cog Level:	C/A 4.2/4.4
Source:	M	Exam:	HT02301
Test:	R	Misc:	TCK

47. 264000K3.01 001

Unit 1 has experienced a LOCA with a LOSP. Emergency Diesel Generators "1A" and "1B" are running with their output breakers closed. Emergency Diesel Generator "1C" has failed to start. Approximately 25 seconds later you notice the following pump status:

Pumps Running	Pumps Idle
"1A" Core Spray Pump	"1A" PSW Pump
"1C" RHR Pump	"1B" PSW Pump
	"A, B and D" RHR Pumps
	"1B" Core Spray Pump

Which ONE of the following describes the pumps that you would expect to be operating for this condition?

A. PSW pump "1A" should also be running.

B. "A" and "D" RHR pumps should also be running.

C. "A", "B" and "D" RHR pumps should also be running.

D. "B" Core Spray, "A" and "D" RHR pumps and "1A" PSW pump should also be running.

References: LT-LP-02801 Rev. 03, pg 49-50 of 87
EO 028.025.a.02

A. Incorrect since the PSW pumps are load-shed upon an auto start of the D/G.

B. Correct answer.

C. Incorrect since "B" RHR pump is powered from the 1C D/G which has failed.

D. Incorrect since "B" Core Spray is powered from 1C D/G which has failed and the "1A" PSW pump should not have started.

RO Tier:	T2G1	SRO Tier:	
Keyword:	DIESEL GENERATOR	Cog Level:	C/A 4.2/4.4
Source:	M	Exam:	HT02301
Test:	R	Misc:	TCK

16. 264000K3.01 001

Unit 1 has experienced a LOCA with a LOSP. All of the Emergency Diesel Generators are running with their output breakers closed. Approximately 23 seconds later you notice the following pump status:

Pumps Running	Pumps Idle
"1A" Core Spray Pump	"1A" PSW Pump
"1B" Core Spray Pump	"1B" PSW Pump
"1C" RHR Pump	"A, B and D" RHR Pumps

SELECT the response below that describes the current plant conditions.

A. PSW pump "1A" and PSW pump "1B" should also be running.

B. "A, B and D" RHR pumps should also be running.

C. All Core Spray, RHR and both PSW pumps should be running at this time.

D. All required automatic actions have occurred at this time.

References: LT-LP-02801 Rev. 03, pg 49-50 of 87
EO 028.025.a.02

A. Incorrect since the PSW pumps are load-shed upon an auto start of the D/G.

B. Correct answer.

C. Incorrect since the PSW pumps are load-shed on a D/G start.

D. Incorrect since there are aditional pumps that should be running.

Review Attachment 2 with students

NOTE: Refer to Attachment 2 for detailed sequence.

3. Diesel Generator Start Failure

   a. If the time delayed (T2A and T2B) relays time out (7 seconds) before the Low Speed Relay deenergizes them, the Start Failure Relay (SFR) is energized (diesel generator has cranked for 7 seconds without firing and has failed to start).

   b. The energized Start Failure Relay energizes the Shutdown Relay (SDR) which seals in and stops the diesel generator.

   c. The diesel generator can be returned to a standby condition after the shutdown relay is manually reset using the pushbutton on P652. The diesel generator may now be restarted after a 100-second time delay.

EO 14

Table 02

5. Diesel Generator Loading Sequence

   a. If the diesel generator started due to a LOSP signal, it will tie to its respective 4160 VAC emergency bus and initiate LOSP/LOCA Timers and Load Shed Relays which will:

      1) Prior to the Diesel tying to the bus, all loads on the respective 4160 VAC emergency bus are Loadshed.

         NOTE: Loadshed is a term used to describe the tripping of power supply breakers to non-essential loads. This in conjunction with time delayed starts prevents overloading the diesels.

      2) Immediately start both Core Spray Pumps and LPCI RHR Pump C if a LOCA signal exists. (T=12 seconds)

3) 10 seconds later, LPCI RHR Pumps A, D and B start if a LOCA exists (T=22 seconds)

4) 8 seconds later, PSW Pumps A and B start (T=30 seconds)

5) 2 seconds later, PSW Pump C start if PSW pump A failed to start. (T=32 seconds)

6) 2 seconds later, PSW Pump D start if PSW pump B failed to start. (T=34 seconds)

b. This loading sequence prevents overloading the diesel generator due to motor starting current.

6. Diesel Generator Shutdown Sequence

NOTE: Refer to Attachment 2 for detailed sequence.

Figs 09 & 14

B. Diesel Generator Heating Ventilation System Operation

EO 15a

1. Generator Room Heating and Ventilation System

Each generator room contains three 50% heaters. Each heater is rated at 12 kW. These heaters are normally automatically controlled by separate wall mounted thermostats to maintain the area temperature above 40°F. The operating range of the heaters is 40-43°F.

MKV-2(1) Normal fan
MKV-1(2) Backup fans

There are three vents fans located in each generator room. The MK V-2 fan is controlled by thermostat X41-N012, and the MK V-1 fans are controlled by thermostat X41-N011. At 95°F increasing the MK V-2 fan is auto started and at 97°F increasing the MK V-1 primary fan is auto started. The MK V-1 fan is tripped off at 94°F decreasing and the MK V-2 fan at 92°F decreasing.

a. Interlocks

5. Following a control room evacuation, DETERMINE if additional Load may be added to an operating diesel. (028.028.a.01)

6. Given Plant parameters, DETERMINE if the D/Gs should have auto-started per 34SO-R43-001-1/2S, "Diesel Generator Standby AC System." (028.025.a.01)

7. Given D/G parameters, DETERMINE if the D/G should have tripped per 34SO-R43-001-1/2S, "Diesel Generator Standby AC System." (028.023.a.02)

8. From a list, SELECT the available means to locally shutdown a D/G. (028.022.a.03)

9. From a list of statements, SELECT the statement which best describes the conditions necessary for an D/G to auto-tie to an emergency bus per 34SO-R43-001-1/2S, "Diesel Generator Standby AC System." (028.006.a.01)

10. From a list, SELECT the (6) system responses that occur when the D/G mode switch is placed in "TEST" according to 34SO-R43-001-1/2S, "Diesel Generator Standby AC System." (028.023.a.04)

11. From a list of statements, SELECT the statement which best describes the Plant response if an D/G mode switch is in "TEST" and the following occurs. (028.023.a.10)

    a. LOSP
    b. LOCA
    c. Loss of respective 4160 VAC Emergency Bus

12. Given Plant conditions for Units 1 and 2, IDENTIFY which unit the "1B" D/G will tie to for any specified combination of LOSP, LOCA or position of the "D/G Unit Select Switch." (028.025.a.04)

13. From a list of cooling water supplies, SELECT the D/G sources of cooling water. (028.023.a.05)

14. From a list, SELECT the proper loading sequence for any 4160 VAC Emergency bus after the D/G starts and the following conditions exist: (028.025.a.02)

    a. LOSP
    b. LOCA/LOSP

50. 271000K4.08 001

The following Unit 2 valves have automatically closed:

Main Stack Inlet valve 2N62-F057
Holdup Volume Drain valve 2N62-F085
Offgas Moisture Separator drain to the Main Condenser 2N62-F030A/B

Which ONE of the following is most likely to have caused this plant condition?

A. BOTH Off-Gas Pre-treat Monitors Hi-Hi.

B. ✓ ONE Off-Gas Post-treat Monitor downscale and ONE Off-Gas Post-treat Monitor Hi-Hi-Hi.

C. BOTH Stack Gas Monitors Hi-Hi.

D. Recombiner building CCW out of Off-Gas Condenser reading 148 F.

References: LT-LP-03101-03 Rev. 03 pg 20-22 of 44.
EO 031.001.a.15

A. Incorrect since this alarm does not cause any isolations.

B. Correct answer since any combination of downscale or Hi-Hi-Hi in both trip systems simultaneously causes these valves to isolate.

C. Incorrect since this setpoint causes the Main Stack Effluent Accident Range Gas Monitor to actuate.

D. Incorrect since a temperature of 140 F causes 2N62-F003 A/B to close.

(Changed answer C and D from OffGas Carbon Vault Monitors Inop and Main Steam Line Radiation Monitors greater than 3x normal to the ones that were listed. Changed answer B to actuate on any combination of setpoints. Added information to answers for the number of monitors that were in alarm. Modified the list of valves in the stem).

RO Tier:	T2G2	SRO Tier:	
Keyword:	OFF-GAS	Cog Level:	MEM 3.1/3.3
Source:	M	Exam:	HT02301
Test:	R	Misc:	TCK

QUESTIONS REPORT
for HT2002

1. 271000K4.08 001

The following plant valves have automatically closed:

Main Stack Inlet valve 2N62-F057
Holdup Volume Drain valve 2N62-F085
Offgas Moisture Separator drain to the Main Condenser 2N62-F030A/B

SELECT the signal which is most likely to have caused this plant condition.

A. BOTH Off-Gas Pre-treat Monitors Hi-Hi.

B. ✓ ONE Off-Gas Post-treat Monitor downscale and ONE Off-Gas Post-treat Monitor Hi-Hi-Hi.

C. BOTH Stack Gas Monitors Hi-Hi.

D. Recombiner building CCW out of Off-Gas Condenser reading 148 F.

References: LT-LP-03101-03 Rev. 03 pg20-22 of 44.
EO 031.001.a.15

A. Incorrect since this alarm does not cause any isolations.

B. Correct answer since any combination of downscale or Hi-Hi-Hi in both trip systems simultaneously causes these valves to isolate.

C. Incorrect since this setpoint causes the Main Stack Effluent Accident Range Gas Monitor to actuate.

D. Incorrect since a temperature of 140 F causes 2N62-F003 A/B to close.

(Changed answer C and D from OffGas Carbon Vault Monitors Inop and Main Steam Line Radiation Monitors greater than 3x normal to the ones that were listed. Changed answer B to actuate on any combination of setpoints. Added information to answers for the number of monitors that were in alarm. Modified the list of valves in the stem).

Table LT-03101-3 contains a listing of system controls and switch positions.

EO 6q

B. Hydrogen Analyzers

Two H_2 analyzers are used to monitor and record the level of Hydrogen in the Off-Gas System. Both analyzers draw a sample from just prior to the holdup volume.

Fig 06

A list of the controls and indications for the analyzers is contained in Table LT-03101-4.

EO 6p

C. Radiation Monitors

Radiation monitors are used to monitor, indicate, record, and annunciate radiation levels at various points from gasses flowing through the system. The following areas are sampled:

Two Pretreatment Monitors (gamma compensated Ion Chambers) sample just prior to the holdup volume.

Two Posttreatment Monitors (Scintillation detectors) sample from the discharge of the first carbon bed in each train and just prior to the after filters.

Two Stack Monitors (Scintillation detectors) sample the Off-Gas flow going up the stack and will activate the Main Stack Effluent Accident Range Gas Monitor on a **Hi-Hi** signal. The sample probes are arranged across the stack to ensure a representative sample is obtained.

EO 8

Two Carbon vault monitors (Geiger-Mueller) sample for buildup of radiation due to long-lived particulates.

EO 6j

Any combination of Inoperable, Downscale, or **Hi-Hi-Hi** radiation signals, simultaneously in both trip channels of the Posttreatment Monitors, will cause the following valves to close:

EO 6k, l, m

Main Stack Inlet Valve F057 (F527) to prevent additional release.

The following Loop Seal Drain valves close to prevent an inadvertent release, since these drain to Radwaste instead of the Main Condenser.

Cooler Condenser and Moisture Separator, F030A/B

Holdup volume F085(F086)

Prefilter F111A/B (Unit 1 only)

EO 6o
EO 7

If the charcoal beds are being bypassed with the Off-Gas Mode Switch in AUTO, receipt of a posttreatment **Hi** radiation signal (either channel) will cause the bypass valve F043 to close and the charcoal bed inlet, F042 to open.

The posttreatment trip signal setpoints are based on short term maximum release rates contained in Technical Specifications 3.11.2.1(3.15.2.1)

Table LT-03101-6 contains power supply list.

EO 5

Table LT-03101-5 contains a list of control room associated instruments and alarms.

D. Recombiner Isolation (Unit One)

EO 5

A high temperature from the Recombiner Building Closed Cooling Water out of the Off-Gas condenser causes the recombiner inlet valves F003A/B to close. The setpoint for this temperature trip is 140°F.

E. Glycol System Auto-Starts

7. Given a list of Off-Gas Post Treatment Radiation Monitor conditions, DETERMINE which conditions would actuate the automatic interlock between the Adsorber Bypass Valve (F043) and the Inlet to Adsorber Valve (F042). (031.001.a.12)

8. Given a list of plant parameters, SELECT those that would directly result in an Off-Gas System isolation. (031.001.a.15)

9. From a list of statements, SELECT the statement that describes the reason for air purging the Off-Gas System prior to placing the system in operation. (031.001.a.13)

10. From a list of statements, SELECT the statement that describes the advantage of operating the Off-Gas System in series train mode. (031.003.a.02)

11. From a list of statements, SELECT the statement that describes the effect of the charcoal adsorbers on the radioactive iodine as it passes through the charcoal beds. (031.005.a:02)

46. 295002G2.1.2 001

Unit 1 is operating at 550 MWe when the "1A" Circ Water pump trips.

Which ONE of the following actions should be taken by the Operator?

A.✓ Reduce power as necessary to maintain Conderser Vacuum and attemp to restart the "1A" Circ Water pump.

B. Immediately attempt to restart the "1A" Circ Water pump. If the Circ Water pump fails to start, then scram the reactor and close the MSIV's.

C. Immediately attempt to restart the "1A" Circ Water pump. If the Circ Water pump fails to start, then reduce power to less than 450 MWe.

D. Reduce power as necessary to maintain Condenser Vacuum. When condensate demin inlet temperature reaches 140°F, isolate the feed and condensate system.

References: 34AB-N71-001-1S Rev. 4.1
Copy of bank question.

A. Correct answer.

B. Incorrect since the MSIV's are closed if there is no circ water flow.

C. Incorrect since there is not a limit for how far to reduce power as long as condenser vacuum is being maintained.

D. Incorrect since there is no direction to isolate the Condensate System.

RO Tier:	T1G2	SRO Tier:	
Keyword:	CONDENSER VACUUM	Cog Level:	MEM 3.0/4.0
Source:	B	Exam:	HT02301
Test:	R	Misc:	TCK

59. 295002G2.1.2 001

Unit 1 is operating at 800 MWe when the "1A" Circ Water pump trips.

Which ONE of the following actions should be taken by the Operator?

A.✓ Reduce power as necessary to maintain Conderser Vacuum and attemp to restart the "1A" Circ Water pump.

B. Immediately attempt to restart the "1A" Circ Water pump. If the Circ Water pump fails to start, then scram the reactor and close the MSIV's.

C. Immediately attempt to restart the "1A" Circ Water pump. If the Circ Water pump fails to start, then reduce power to less than 450 MWe.

D. Reduce power as necessary to maintain Condenser Vacuum. When condensate demin inlet temperature reaches 140°F, isolate the feed and condensate system.

References: 34AB-N71-001-1S Rev. 4.1
Copy of bank question.

A. Correct answer.

B. Incorrect since the MSIV's are closed if there is no circ water flow.

C. Incorrect since there is not a limit for how far to reduce power as long as condenser vacuum is being maintained.

D. Incorrect since there is no direction to isolate the Condensate System.

RO Tier:	T1G2	SRO Tier:	
Keyword:	CONDENSER VACUUM	Cog Level:	MEM 3.0/4.0
Source:	B	Exam:	HT02301
Test:	R	Misc:	TCK

QUESTIONS REPORT
for HT2002

1. 295002G2.1.2 001

Unit 1 is operating at 800 MWe when the "1A" Circ Water pump trips. Which of the following actions should be taken by the Operator?

A. Reduce power as necessary to maintain Conderser Vacuum and attemp to restart the "1A" Circ Water pump.

B. Immediately attempt to restart the "1A" Circ Water pump. If the Circ Water pump fails to start, then scram the reactor and close the MSIV's.

C. Immediately attempt to restart the "1A" Circ Water pump. If the Circ Water pump fails to start, then reduce power to less than 450 MWe.

D. Reduce power as necessary to maintain Condenser Vacuum. When condensate demin inlet temperature reaches 140 F, isolate the feed and condensate system.

References: 34AB-N71-001-1S Rev. 4.1
Copy of bank question.

A. Correct answer.

B. Incorrect since the MSIV's are closed if there is no circ water flow.

C. Incorrect since there is not a limit for how far to reduce power as long as conderser vacuum is being maintained.

D. Incorrect since there is no direction to isolate the Condensate System.

3.0 IMMEDIATE OPERATOR ACTIONS

NOTE

The Helper Cooling Tower typically carries 35%-40% of the heat load under rated conditions.

3.1 IF power is lost to the Helper Cooling Tower, REDUCE reactor power to <2558 MWt.

3.2 IF power is lost to the Helper Cooling Tower AND any other cooling tower (1A, 1B, 1C) is out of service, THEN reduce reactor power to ≤ 75% RTP.

4.0 SUBSEQUENT OPERATOR ACTIONS

4.1 Maintain condenser parameters within the limits of Attachment 2. FURTHER power reductions MAY be necessary to accomplish this.

4.2 IF power is lost to any Cooling Tower(s) OTHER than the Helper Tower, THEN reduce power AS NECESSARY to maintain condenser parameters within the limits of Attachment 2.

4.3 IF circulating water system flow cannot be reestablished AND reactor power is greater than 5%, enter 34AB-C71-001-1S, Scram Procedure, AND SCRAM the reactor.

CAUTION

A LOSS OF CIRCULATING WATER PUMPS COULD CAUSE THE MAIN CONDENSER RUPTURE DISC, ON THE L. P. TURBINE, TO RUPTURE IF THE STEAM SUPPLY IS NOT ISOLATED TO THE CONDENSER

4.4 IF circulating water system flow cannot be reestablished in a timely manner, after one restart attempt (allowing a couple of minutes for the disch. valve to close), perform the following:

- CLOSE the MSIV's
- CLOSE the MSL Drains
- CLOSE 1N38-F101A and 1N38-F101B, RSSV's

4.5 IF the MSIVs are CLOSED, control reactor pressure using SRVs, HPCI and/or RCIC per the applicable system operating procedures.

4.6 IF condenser room flooding has occurred, enter 34AB-P41-001-1S, Loss of Plant Service Water AND 34AB-B31-001-1S, Trip of One or Both Reactor Recirculation Pumps AND perform concurrently with this procedure.

4.7 IF a single circulating pump has tripped and cannot be restarted, reduce reactor power to maintain a constant vacuum per 34GO-OPS-005-1S, Power Changes.

4.8 IF the condensate demineralizer inlet temperature exceeds 140°F, BYPASS the filter demins by opening 1N21-F254 on 1N21-P001.

4.9 Continue attempts to restore the Circulating Water System and utilize main condenser as the reactor heat sink.

5.0 REFERENCES

5.1 H-11086, Circulating Water System P&ID

5.2 57CP-CAL-062-1S, Barksdale Pressure Switch Calibration

Question #:	LR-LP-999000-0005	**Objective #:**	14
Media #:	LR-LP-03201-01	**Answer:**	**c. (1.0)**

Unit 2 is operating at 790 MWe when "2A" Circ water pump trips, the ì operator should:

a. Immediately attempt to restart the "2A" Circ Water Pump. If the Circ Water pump fails to start, then reduce power to less than 450 MWE.

b. Immediately attempt to restart the "2A" Circ Water Pump. If the Circ Water Pump fails to start, then scram the reactor and close the MSIVs.

c. Reduce power as necessary to maintain Condenser Vacuum and attempt to restart the "2A" Circ Water Pump.

d. Reduce power as necessary to maintain vacuum. When condensate demin inlet temperature reaches 140 degrees Farenheit, isolate the feed and condensate system.

69. 295010AA2.02 001

Unit 1 has scrammed due to high Drywell pressure. Torus Spray is INOPERABLE and Drywell Spray was initiated per the EOP's. The following conditions presently exist:

Reactor Water Level	-135 inches and increasing
Torus level	136 inches and stable
Torus temperature	125°F and increasing
Torus pressure	.5 psig and increasing
Drywell average temperature	145°F and increasing
Drywell pressure	-.5 psig and increasing

Based on the above plant conditions, which ONE of the following describes Drywell Spray operation?

A. SHOULD NOT be in operation because Drywell pressure is below 0 psig.

B. SHOULD be in operation until Torus pressure reaches 0 psig.

C. SHOULD NOT be in operation because Drywell pressure is below the EOP entry condition.

D. SHOULD be in operation because a PC-1 Primary Containment Control entry condition still exists.

References: PC-1 Primary Containment Control

A. Correct answer.

B. Incorrect since Drywell Sprays should be isolated before Drywell pressure reaches 0 psig.

C. Incorrect since Drywell Sprays are not governed by the EOP entry conditions but by the Primary Containment Pressure leg of the EOP's.

D. Incorrect since Drywell Sprays should be isolated before Drywell pressure reaches 0 psig per the overide in EOP's.

RO Tier:	T1G1	SRO Tier:	
Keyword:	DRYWELL SPRAY	Cog Level:	C/A 3.8/3.9
Source:	N	Exam:	HT02301
Test:	R	Misc:	TCK

QUESTIONS REPORT
for HT2002

1. 295010AA2.02 001

Unit 1 has scrammed due to high Drywell pressure. Torus Spray is INOPERABLE and Drywell Spray was initiated per the EOP's. The following conditions presently exist:

Reactor Water Level	-135 inches and increasing
Torus level	136 inches and stable
Torus temperature	125°F and increasing
Torus pressure	.5 psig and increasing
Drywell average temperature	145°F and increasing
Drywell pressure	-.5 psig and increasing

Based on the above plant conditions, which ONE of the following indicates if Drywell Sprays SHOULD or SHOULD NOT be in operation?

A. SHOULD NOT be in operation because Drywell pressure is below 0 psig.

B. SHOULD be in operation until Torus pressure reaches 0 psig.

C. SHOULD NOT be in operation because Drywell pressure is below the EOP entry condition.

D. SHOULD be in operation because a PC-1 Primary Containment Control entry condition still exists.

References: PC-1 Primary Containment Control
Graph 8, Drywell Spray Initiation Limit

A. Correct answer.

B. Incorrect since Drywell Sprays should be isolated before Drywell pressure reaches 0 psig.

C. Incorrect since Drywell Sprays are not governed by the EOP entry conditions but by the Primary Containment Pressure leg of the EOP's.

D. Incorrect since Drywell Sprays should be isolated before Drywell pressure reaches 0 psig per the overide in EOP's.

19. 295010AA2.02 001

Unit 1 has scrammed due to high Drywell pressure. The RHR system is operating in Torus Spray mode with the following plant conditions:

Reactor Water Level	-150 inches and increasing
Torus level	136 inches and stable
Torus temperature	93 F and increasing
Torus pressure	18.2 psig and increasing
Drywell average temperature	335 F and increasing
Drywell pressure	26.8 psig and stable

Based on the above plant conditions, Drywell Sprays:

A. SHOULD NOT be initiated because Reactor water level is too low.

B. SHOULD be initiated due to increasing Drywell temperature.

C. SHOULD NOT be initiated because the unsafe region of the Drywell Spray Initiation Limit has been entered.

D. SHOULD be initiated due to increasing Torus pressure.

References: PC-1 Primary Containment Control

A. Incorrect since RWL is above TAF and increasing and this will not prevent actuating DW Sprays.

B. Incorrect since you must be within the DW Spray Initiation Limit before actuating DW Sprays and with current plant conditions it is outside these limits.

C. Correct answer.

D. Incorrect since this also requires the plant to be within the DW Spray Initiation Limit.

PC-1 PRIMARY CONTAINMENT CONTROL

ater level
150 in.

Drywell temperature above 150 °F

Torus water level below 146 in.

Torus water temperature above 100 °F

Drywell pressure above 1.85 psig

WHILE PERFORMING THE FOLLOWING

IF PRIMARY CONTAINMENT FLOODING IS OR HAS BEEN REQUIRED — THEN exit the EOPs and enter the Severe Accident Guidelines → Go to SAGs

PERFORM CONCURRENTLY

SP/L

nd control torus water level
146 in. and 150 in. using:
for low water levels per
SO-E21-001-1S
IR for high water levels per
SO-E11-010-1S

WAIT UNTIL
torus water level
CANNOT be maintained
tween 146 in. and 150 in.

Is torus water level low 146 in. or above 150 in. — ABOVE 150

ENTLY
rus water level
in. per 34SO-E21-001-1S or
-087-1S

torus level
CANNOT be maintained
above 115 in.

and prevent operation of HPCI
pective of adequate core cooling

ting
level
er

ENTLY
rus water level
.5 in. per 34SO-E11-010-1S or
-087-1S

WAIT UNTIL
torus water level
CANNOT be maintained
below 197.5 in.

e drywell sprays
AND
injection into RPV from sources
to primary containment EXCEPT
required for:
lequate cooling
ron ini
RD

WAIT UNTIL
torus water level
CANNOT be maintained
below 300 in.

SP/T

3

Monitor and control torus water temperature below 100°F using available torus cooling per 34SO-E11-010-1S

WAIT UNTIL
torus water temperature CANNOT be maintained below 100°F

5

Operate ALL available torus cooling per 34SO-E11-010-1S EXCEPT RHR pumps required for adequate core cooling by continuous operation in LPCI mode

BEFORE
torus water temperature reaches BIIT curve limit (Graph 5)

PERFORM CONCURRENTLY
RC[A] point A

WAIT UNTIL
torus water temperature
AND
reactor pressure
CANNOT be maintained below
Heat Capacity Temperature Limit (Graph 2)

EMERGENCY DEPRESS IS REQUIRED

DW/T

1

Monitor and control drywell temperature below 150°F using:
- Drywell cooling fans per 34SO-T47-001-1S

WAIT UNTIL
drywell temperature CANNOT be maintained below 150°F

NOTE 7
Refer to 34AB-B21-002-1S for water level corrections

Operate ALL available drywell cooling using:
- Drywell cooling fans per 34SO-T47-001-1S

If necessary defeat isolation interlocks per 31EO-EOP-100-1S

WHILE PERFORMING THE FOLLOWING
IF primary containment water level and torus pressure CANNOT be maintained below Primary Containment Pressure Limit (Graph 13) — THEN terminate sprays from sources external to the primary containment

7

WHILE PERFORMING THE FOLLOWING
IF drywell sprays have been initiated AND BEFORE drywell pressure drops to 0 psig — THEN terminate drywell sprays

PC/P

1

Monitor and control containment pressure below 1.85 psig using:
- containment pressure control systems per 34SO-T48-002-1S
- SBGT per 34SO-T46-001-1S

WAIT UNTIL
primary containment pressure CANNOT be maintained below 1.85 psig

WHILE PERFORMING THE FOLLOWING
IF primary containment water level and torus pressure CANNOT be maintained below Primary Containment Pressure Limit (Graph 13) — THEN terminate sprays from sources external to the primary containment

7

WHILE PERFORMING THE FOLLOWING
IF torus sprays have been initiated AND BEFORE torus pressure drops to 0 psig — THEN terminate torus sprays

NOTE 3
Torus pressure is indicated on the following:
- 1T48-PI-R632A (P657)
- 1T48-PI-R632B (P654)
- 1T48-PR-R608 (P657)
- 1T48-PR-R609 (P650)

BEFORE
torus pressure reaches 10 psig

3

IF torus water level is below 285 in.
THEN initiate torus sprays per 34SO-E11-010-1S EXCEPT RHR pumps required for adequate core cooling by continuous injection in LPCI mode

7

WHILE PERFORMING THE FOLLOWING
IF drywell sprays have been initiated AND BEFORE drywell pressure drops to 0 psig — THEN terminate drywell sprays

WAIT UNTIL
torus pressure is above 10 psig

[redacted]

3

IF torus water level is below 197.5 in. AND drywell temperature and pressure are within the Drywell Spray Initiation Limit (Graph 8)
THEN trip recirc pumps and drywell cooling fans
AND
initiate drywell sprays per 34SO-E11-010-1S EXCEPT RHR pumps required for adequate core cooling by continuous injection in LPCI mode

NOTE 9
Drywell spray flow limits:
- 17,000 gpm per loop
- 11,500 gpm through the heat exchanger

NOTE 10
If DW sprays are throttled closed, and an increase in DW pressure occurs, then DW sprays must be considered secured. Conditions for initiating DW sprays must be met to resume DW sprays

WAIT UNTIL
torus pressure CANNOT be maintained below Pressure Suppression Pressure (Graph 7)

EMERGENCY DEPRESS IS REQUIRED

BEFORE
torus pressure reaches

DRYWELL SPRAY INITIATION LIMIT

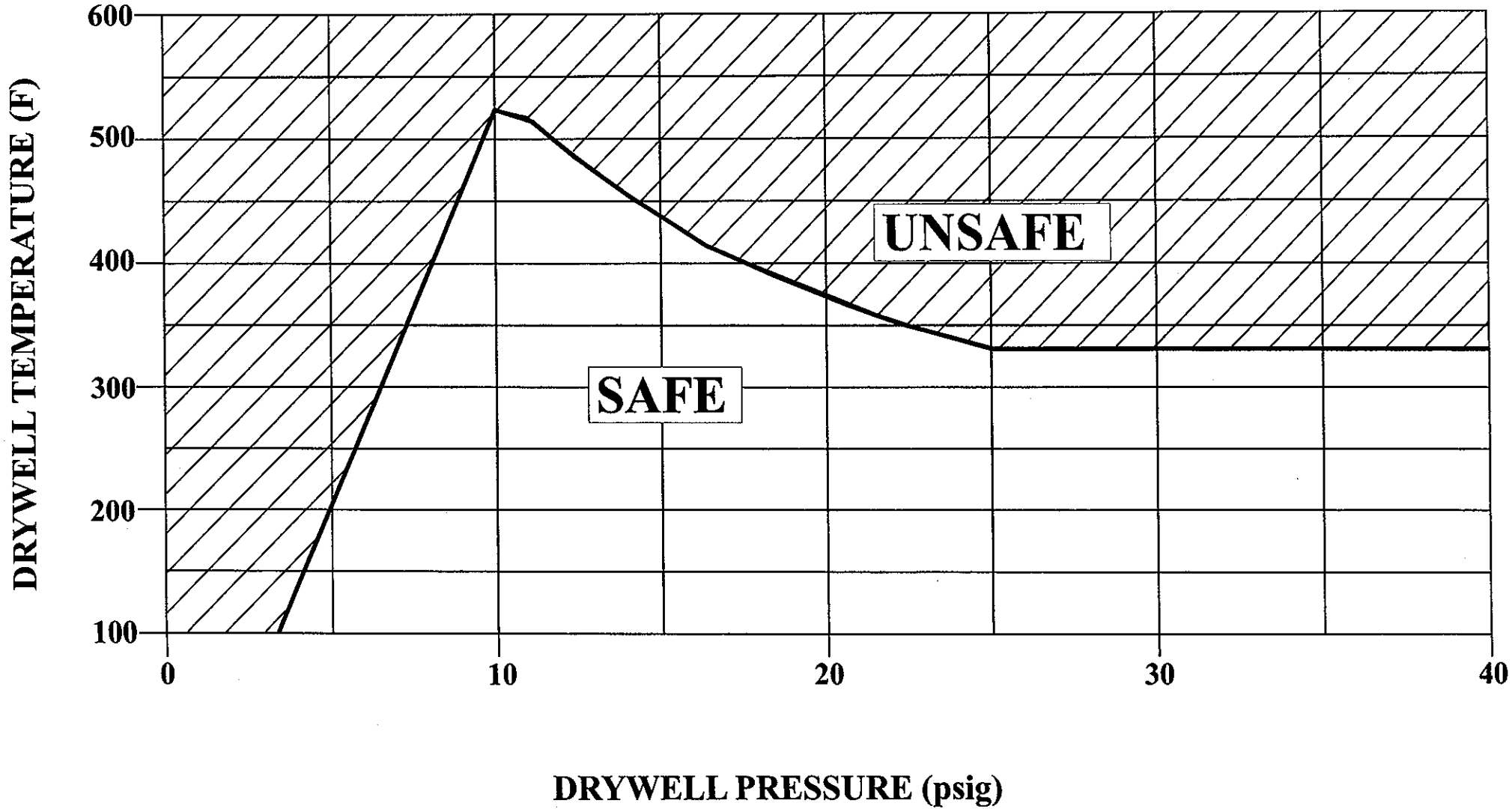

NOTE: May use SPDS Emergency Displays in place of this Graph.

47. 295020G2.1.20 001

Unit 2 is at 100% RTP with the I & C Technicians in the process of performing the quarterly Main Steam Line Flow - High functional surveillance. The unit scrams due to a Group 1 isolation.

Which ONE of the following actions are required to be performed to reset the GROUP 1 signal?

A. Confirm all Group 1 valves are closed. Shift Supervisor determines that signal was spurious since I & C Techs were performing a Group 1 surveillance and orders CBO to reset the Group 1 signal.

B. Confirm all Group 1 valves are closed. CBO places all MSIV control switches to 'closed'. Shift Supervisor stops I & C surveillance and verifies Group 1 signal is spurious by checking associated parameters and orders CBO to reset the Group 1 signal.

C. Shift Supervisor stops I & C surveillance and ensures all equipment is back to normal. Shift Supervisor verifies Group 1 signal is spurious by checking associated parameters including radiation monitors and orders CBO to reset the Group 1 signal.

D. Confirm that the Group 1 isolation was valid. Do not reset the Group 1 isolation until the plant enters Mode 4 where the instrumentation is not required to be OPERABLE.

References: 34AR-603-208-2S Rev. 4.2
Tech Spec 3.3.6.1, Primary Containment Isolation Instrumentation

A. Incorrect since the MSIV's are required to have a closed signal applied with the control switches prior to reseting the isolation signal.

B. Correct answer.

C. Incorrect since the Operators must verify isolation occurred properly and also give a closed signal to the MSIV's prior to resetting isolation signal.

D. Incorrect since the cause of the Group 1 was spurious and you do not need to wait for Mode 4 to reset the Group 1 since nothing is INOPERABLE.

RO Tier:	T1G2	SRO Tier:	
Keyword:	ISOLATION INSTR	Cog Level:	C/A 4.2/3.9
Source:	N	Exam:	HT02301
Test:	R	Misc:	TCK

79. 295020G2.1.20 001

Unit 2 is at 100% RTP with the Instrument Maintenance Technicians in the process of performing the quarterly Main Steam Line Flow - High functional surveillance. The unit scrams due to a Group 1 isolation.

Which ONE of the following actions are required to be performed to reset the GROUP 1 signal?

A. Confirm all Group 1 valves are closed. Shift Supervisor determines that signal was spurious since IM's were performing Group 1 surveillance and orders CBO to reset the Group 1 signal.

B.✓ Confirm all Group 1 valves are closed. CBO places all MSIV control switches to 'closed'. Shift Supervisor stops IM surveillance and verifies Group 1 signal is spurious by checking associated parameters and orders CBO to reset the Group 1 signal.

C. Shift Supervisor stops IM surveillance and ensures all equipment is back to normal. Shift Supervisor verifies Group 1 signal is spurious by checking associated parameters including radiation monitors and orders CBO to reset the Group 1 signal.

D. Confirm that the Group 1 isolation was valid. Do not reset the Group 1 isolation until the plant enters Mode 4 where the instrumentation is not required to be OPERABLE.

References: 34AR-603-208-2S Rev. 4.2
Tech Spec 3.3.6.1, Primary Containment Isolation Instrumentation

A. Incorrect since the MSIV's are required to have a closed signal applied with the control switches prior to reseting the isolation signal.

B. Correct answer.

C. Incorrect since the Operators must verify isolation occurred properly and also give a closed signal to the MSIV's prior to resetting isolation signal.

D. Incorrect since the cause of the Group 1 was spurious and you do not need to wait for Mode 4 to reset the Group 1 since nothing is INOPERABLE.

RO Tier:	T1G2	SRO Tier:	
Keyword:	ISOLATION INSTR	Cog Level:	C/A 4.2/3.9
Source:	N	Exam:	HT02301
Test:	R	Misc:	TCK

QUESTIONS REPORT
for HT2002

1. 295020G2.1.20 001

Unit 2 is at 100% RTP with the Instrument Maintenance Technicians in the process of performing the quarterly Main Steam Line Flow - High functional surveillance. The unit scrams due to a Group 1 isolation. SELECT the actions required to be performed to reset the GROUP 1 signal.

A. Confirm all Group 1 valves are closed. Shift Supervisor determines that signal was spurious since IM's were performing Group 1 surveillance and orders CBO to reset the Group 1 signal.

B. Confirm all Group 1 valves are closed. CBO places all MSIV control switches to 'closed'. Shift Supervisor verifies Group 1 signal is spurious by checking associated parameters including radiation monitors and orders CBO to reset the Group 1 signal.

C. Shift Supervisor stops IM surveillance and ensures all equipment is back to normal. Shift Supervisor verifies Group 1 signal is spurious by checking associated parameters including radiation monitors and orders CBO to reset the Group 1 signal.

D. Confirm that the Group 1 isolation was valid. Do not reset the Group 1 isolation until the plant enters Mode 4 where the instrumentation is not required to be OPERABLE.

References: 34AR-603-208-2S Rev. 4.2
Tech Spec 3.3.6.1, Primary Containment Isolation Instrumentation

A. Incorrect since the MSIV's are required to have a closed signal applied with the control switches prior to reseting the isolation signal.

B. Correct answer.

C. Incorrect since the Operators must verify isolation occurred properly and also give a closed signal to the MSIV's prior to resetting isolation signal.

D. Incorrect since the cause of the Group 1 was spurious and you do not need to wait for Mode 4 to reset the Group 1 since nothing is INOPERABLE.

1.0 IDENTIFICATION:

ALARM PANEL 603-2

GROUP 1

SYSTEM A

TRIP

DEVICE:
2A71-K7A,C

SETPOINT:
SEE SECTION 6.0

2.0 CONDITION:
Indicates that one half of the logic required to auto close the Group 1 Isolation Valves has tripped

3.0 CLASSIFICATION:
EMERGENCY

4.0 LOCATION:
2H11-P603 Panel 603-2

5.0 OPERATOR ACTIONS:

5.1 IF only a half isolation occurred, determine the cause of the trip AND take corrective actions.
5.2 IF a SCRAM occurs, enter 34AB-C71-001-2S, Scram Procedure.
5.3 IF a full isolation occurred, confirm the following valves CLOSE:
5.3.1 2B21-F022A,B,C,D (Inboard MSIVs)
5.3.2 2B21-F028A,B,C,D (Outboard MSIVs)
5.3.3 2B21-F016 and 2B21-F019 (MSL Drain Vlvs)
5.3.4 2B31-F019 and 2B31-F020 (Rx Water Sample Vlvs)
5.4 IF a full isolation occurred, PLACE the control switch to CLOSE for the following valves:
5.4.1 2B21-F022A,B,C,D (Inboard MSIVs)
5.4.2 2B21-F028A,B,C,D (Outboard MSIVs)

NOTE

A primary containment isolation may be reset IF an analysis of parameters indicates the initiation was spurious OR cause of the initiation has been corrected as indicated by two OR more indications AND the Shift Supervisor has determined that the isolation may be safely reset. A survey of other plant parameters AND alarms including radiation monitors must be made BEFORE resetting.

5.5 RESET the isolation logic by placing Gr Isol Reset switch S32 on panels 2H11-P602 and S33, on panel 2H11-P601 to the left RESET position.
5.6 IF a half isolation occurred, REOPEN 2B21-F016 and 2B31-F019, as required.
5.7 IF a full isolation occurred, REOPEN the valves listed in step 5.3 as required.

6.O CAUSES:

6.1 Reactor water level low (LVL. 1, -101 inches)
6.2 Main steam line flow high (180.5 PSID)
6.3 Main steam tunnel temperature high (190°F)
6.4 Turbine building steam line area temperature high (190°F)
6.5 Main steam line low pressure (855 PSIG in Run Mode)
6.6 Condenser vacuum low (10 inches Hg. Vacuum)

7.0 REFERENCES:

7.1 H-27450 thru H-27464, H-27965 & H-27989 thru H-27991, Nuclear Steam Supply Shutoff System Elementary
7.2 H-24401 thru H-24435, ATTS Elementary
7.3 57CP-CAL-102-2S, Analog Master/Slave Trip Unit Calibration
7.4 57CP-CAL-062-2S, Barksdale Press SW Calibration
7.5 57CP-CAL-090-2S, Sigma Temp Monitor Calibration

8.0 TECH. SPEC./LCO:

8.1 TS 3.3.6.1 Primary Containment Instrumentation
8.2 TS 3.6.1.3 Primary Containment Isolation Valves

Table 3.3.6.1-1 (page 1 of 4)
Primary Containment Isolation Instrumentation

FUNCTION	APPLICABLE MODES OR OTHER SPECIFIED CONDITIONS	REQUIRED CHANNELS PER TRIP SYSTEM	CONDITIONS REFERENCED FROM REQUIRED ACTION C.1	SURVEILLANCE REQUIREMENTS	ALLOWABLE VALUE
1. Main Steam Line Isolation					
a. Reactor Vessel Water Level - Low Low Low, Level 1	1,2,3	2	D	SR 3.3.6.1.1 SR 3.3.6.1.2 SR 3.3.6.1.5 SR 3.3.6.1.6 SR 3.3.6.1.7	≥ -113 inches
b. Main Steam Line Pressure - Low	1	2	E	SR 3.3.6.1.3 SR 3.3.6.1.6	≥ 825 psig
c. Main Steam Line Flow - High	1,2,3	2 per MSL	D	SR 3.3.6.1.1 SR 3.3.6.1.2 SR 3.3.6.1.5 SR 3.3.6.1.6 SR 3.3.6.1.7	≤ 138% rated steam flow
d. Condenser Vacuum - Low	1, 2[a], 3[a]	2	D	SR 3.3.6.1.3 SR 3.3.6.1.6	≥ 7 inches Hg vacuum
e. Main Steam Tunnel Temperature - High	1,2,3	6	D	SR 3.3.6.1.1 SR 3.3.6.1.2 SR 3.3.6.1.5 SR 3.3.6.1.6	≤ 194°F
f. Turbine Building Area Temperature - High	1,2,3	16[b]	D	SR 3.3.6.1.2 SR 3.3.6.1.5 SR 3.3.6.1.6	≤ 194°F
2. Primary Containment Isolation					
a. Reactor Vessel Water Level - Low, Level 3	1,2,3	2	G	SR 3.3.6.1.1 SR 3.3.6.1.2 SR 3.3.6.1.5 SR 3.3.6.1.6	≥ 0 inches
b. Drywell Pressure - High	1,2,3	2	G	SR 3.3.6.1.1 SR 3.3.6.1.2 SR 3.3.6.1.5 SR 3.3.6.1.6	≤ 1.92 psig

(continued)

(a) With any turbine stop valve not closed.

(b) With 8 channels per trip string. Each trip string shall have 2 channels per main steam line, with no more than 40 ft separating any two OPERABLE channels.

101. 300000K6.12 001

Unit 1 is in cold shutdown with repairs being performed on the 1B Recirc Pump seals. The inboard MSIV's are being stroked for surveillance purposes to determine closing times. A LOSP has occurred and the supply breakers have tripped on undervoltage for the Station Service Air Compressors (SSAC's).

Which ONE of the following describes how this will affect the ability to stroke the inboard MSIV's on Unit 1?

A.✓ They have failed closed due to the loss of motive force as the Station Service Air Receivers bleed down.

B. They may still be operated normally since the Backup Nitrogen Supply valve automatically opens at 90# pressure to supply the motive force.

C. They may each be operated once after the Emergency Nitrogen Supply bottles are valved in manually.

D. They may still be operated normally since the normal nitrogen makeup is supplying the motive force to operate the valves.

References: LT-LP-03501-03 Rev. 03 pg 49 of 97
LT 03501 Fig. 03
EO 200.025.a.01

A. Correct answer since the Drywell is de-inerted for ongoing work and nitrogen is not available to operate the valves.

B. Incorrect since this supply is isolated when the drywell is de-inerted.

C. Incorrect since this supply is isolated when the drywell is de-inerted.

D. Incorrect since these bottles cannot be lined up to supply the MSIV's.

RO Tier:	T2G2	SRO Tier:	
Keyword:	INSTRUMENT AIR	Cog Level:	C/A 2.9/2.9
Source:	N	Exam:	HT02301
Test:	R	Misc:	TCK

21. 300000K6.12 001

Unit 1 is in cold shutdown with repairs being performed on the 1B Recirc Pump seals. The MSIV's are being stroked for surveillance purposes to determine closing times. A LOSP has occurred and the supply breakers have tripped on undervoltage for the Station Service Air Compressors (SSAC's). Concerning the MSIV's, how will this affect the ability to stroke the MSIV's on Unit 1?

A. They have failed closed due to the loss of motive force as the Station Service Air Receivers bleed down.

B. They may still be operated normally since the Backup Nitrogen Supply valve automatically opens at 90# pressure to supply the motive force.

C. They may still be operated normally since the normal nitrogen makeup is supplying the motive force to operate the valves.

D. They may each be operated once since the Emergency Nitrogen Supply bottles have a limited amount of gas available.

References: LT-LP-03501-03 Rev. 03 pg 49 of 97
LT 03501 Fig. 03
EO 200.025.a.01

A. Correct answer since the Drywell is de-inerted for ongoing work and nitrogen is not available to operate the valves.

B. Incorrect since this supply is isolated when the drywell is de-inerted.

C. Incorrect since this supply is isolated when the drywell is de-inerted.

D. Incorrect since these bottles cannot be lined up to supply the MSIV's.

25. Given a simplified drawing or P&ID of the Drywell Pneumatic System, IDENTIFY the following components: (042.001.a.02)

    a. Inboard Suction Valve F002
    b. Outboard Suction Valve F003
    c. Inlet Filter D006
    d. Compressor C001A/B
    e. Interruptible Air Back-Up Isolation Valves F036, F038
    f. Receiver Inlet Valve F015
    g. Receiver Outlet Valve F016
    h. Non-Interruptible Air Back-Up Isolation Valves F053, F029
    i. Nitrogen Makeup Isolation Valves F001A/F001B
    j. Flow Elements N019, N021
    k. Drywell Inboard Isolation Valves F004, F066
    l. Drywell Outboard Isolation Valves F005, F067

26. Given plant and/or system conditions, EVALUATE these conditions and DETERMINE if the Drywell Pneumatic System should have isolated on a Primary Containment Signal. (042.001.a.03)

27. From a list, IDENTIFY the loads supplied by the Drywell Pneumatic System. (042.001.a.06)

28. From a list, SELECT the setpoints associated with N_2 makeup valves F001A/F001B. (042.001.a.07)

29. From a list of statements, SELECT the statement that best describes the adverse effects on the MSIVs and SRVs if Drywell Pneumatic pressure is lost. (042.004.a.01)

30. LIST five plant responses to a loss of Instrument/Service Air as stated in 34AB-P51-001-2/1S "Loss of Instrument and Service Air System." (200.025.a.01)

31. Given a list of plant conditions, DETERMINE if the reactor must be manually scrammed per 34AB-P51-001-2/1S "Loss of Instrument and Service Air System." (200.025.a.02)

32. Given a simplified drawing or P&ID of the Instrument/Service Air System and the location of a leak, DETERMINE the air system response and final status. (200.025.a.03)

33. From a list, IDENTIFY the firewatch requirements if fire sprinklers are isolated during a loss of air per 34AB-P51-001-2/1S "Loss of Instrument and Service Air System." (200.025.a.04)

EO 30

3. Automatic Initiations and Isolations

a. The standby Service Air Compressor (A or B) starts at 100 psig and decreasing combined air header pressure.

- "C" starts at 107 psig

b. The Nitrogen Backup Valve(s) open automatically at 80 psig (90 psig for Unit 1, F875 80 psig) decreasing to supply nitrogen pressure to the Non-Interruptible Essential Air Header.

c. The Air Compressor Discharge Valves F200A/B/C close if compressor discharge pressure decreases to 80 psig.

d. On Unit 2, the standby dryer tower, prefilter, and after filter will all automatically valve into service if Instrument Air pressure decreases to 75 psig.

e. On Unit 1, the dryer bypass valve will automatically open if Instrument Air pressure decreases to 70 psig.

f. Also at 70 psig, the Service Air Isolation valve closes, isolating the Service Air System.

g. The Non-Essential Instrument Air Header Isolation valve automatically closes when system air pressure decreases to 50 psig.

h. Also at 50 psig (80 psig for Unit 1), the Feedwater Startup Level Control Valve 2N21-F111 (1N21-F212) LOCKS UP in its existing position.

- This may result in some RPV level problems.

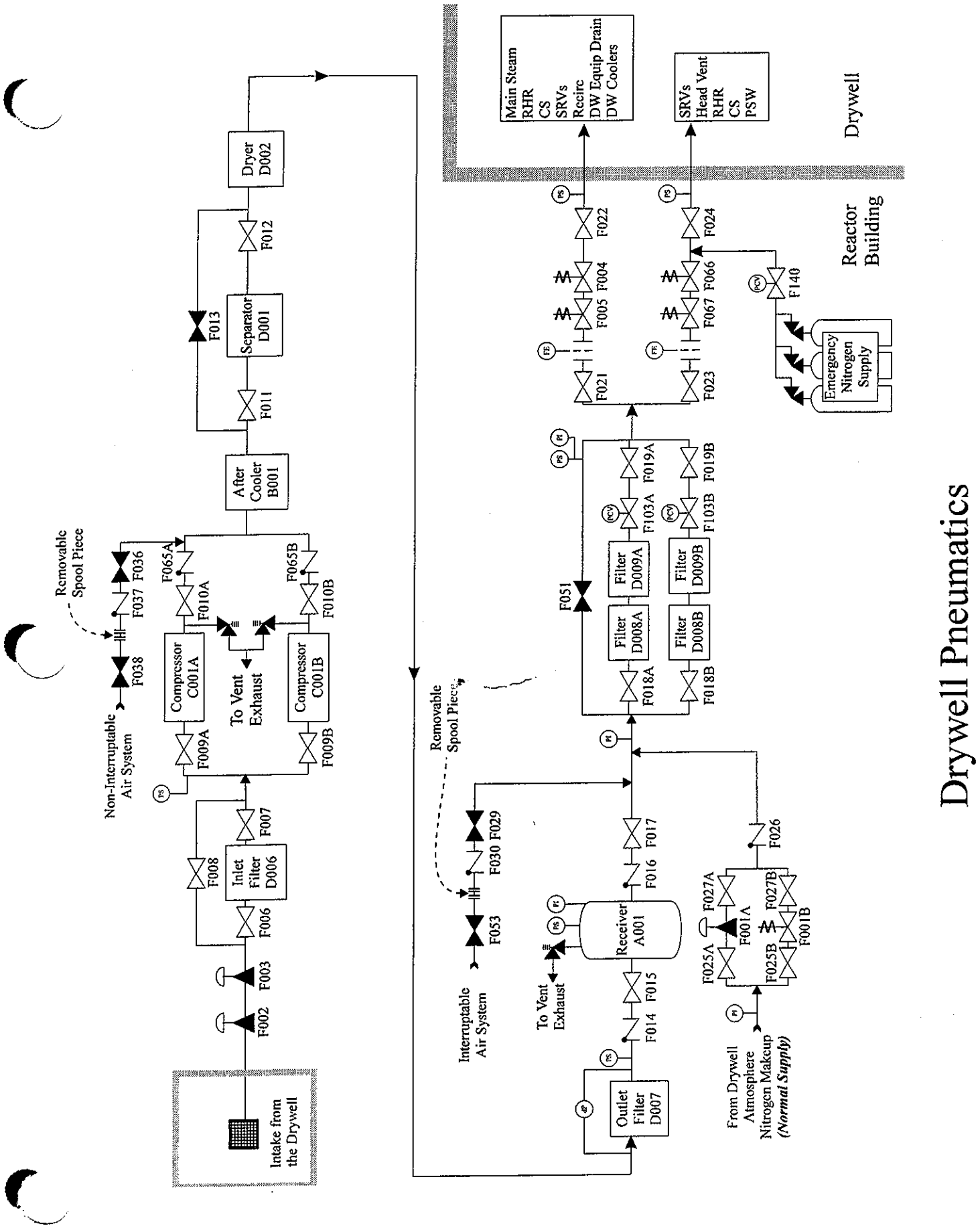

LT-03501 Fig 03

105. G2.1.10 001

Which ONE of the following is the maximum power level authorized for Unit 2 operation in accordance with Tech Specs?

A. 897 MWe

B. 943 MWe

C. 2763 MWt

D. 2816 MWt

References: Tech Specs Section 1.1 pg 1.1-4.
99 Hatch exam question #9

A. Incorrect since MWe is not discussed in the license.

B. Incorrect since MWe is not discussed in the license.

C. Correct answer.

D. Incorrect since wrong number.

RO Tier:	T3	SRO Tier:	
Keyword:	OPERATING LIMITS	Cog Level:	MEM 2.7/3.9
Source:	B	Exam:	HT02301
Test:	R	Misc:	TCK

QUESTIONS REPORT
for HT2002

1. G2.1.10 001

According the the current Facility Operating License No. NPF-5, which one of the following is the maximum power level authorized by the NRC for Unit 2?

A. 897 MWe

B. 943 MWe

C. 2763 MWt

D. 2816 MWt

References: Tech Specs Section 1.1 pg 1.1-4.
99 Hatch exam question #9

A. Incorrect since MWe is not discussed in the license.

B. Incorrect since MWe is not discussed in the license.

C. Correct answer.

D. Incorrect since wrong number.

#8
OK

9. According to the current Facility Operating License No. DPR-57, which one of the following is the maximum power level authorized by NRC for Unit 1?

   a. 897 MWe
   b. 943 MWe
   ✓c. 2763 MWt
   d. 2816 MWt

New question
Facility Operating License No. DPR-57
Unit 1 Tech. Spec., Sect. 1.1, p. 1.1-5
LT-LP-30005-04, p. 7 (note: U1 data in LP is incorrect, see license)

KEY WORDS:

System	K/A No.	K/A Value	Difficulty	SamplePlan	Vendor	Licensee	Last used
GENERICS	2.1.10	(2.7/3.9)	1	TIER3CAT1	BWR-4	HATCH	NEW

DATES: Modified: Wednesday, September 22, 1999 Used:

1.1 Definitions (continued)

LOGIC SYSTEM FUNCTIONAL TEST	A LOGIC SYSTEM FUNCTIONAL TEST shall be a test of all required logic components (i.e., all required relays and contacts, trip units, solid state logic elements, etc.) of a logic circuit, from as close to the sensor as practicable up to, but not including, the actuated device, to verify OPERABILITY. The LOGIC SYSTEM FUNCTIONAL TEST may be performed by means of any series of sequential, overlapping, or total system steps so that the entire logic system is tested.
MINIMUM CRITICAL POWER RATIO (MCPR)	The MCPR shall be the smallest critical power ratio (CPR) that exists in the core for each class of fuel. The CPR is that power in the assembly that is calculated by application of the appropriate correlation(s) to cause some point in the assembly to experience boiling transition, divided by the actual assembly operating power.
MODE	A MODE shall correspond to any one inclusive combination of mode switch position, average reactor coolant temperature, and reactor vessel head closure bolt tensioning specified in Table 1.1-1 with fuel in the reactor vessel.
OPERABLE - OPERABILITY	A system, subsystem, division, component, or device shall be OPERABLE or have OPERABILITY when it is capable of performing its specified safety function(s) and when all necessary attendant instrumentation, controls, normal or emergency electrical power, cooling and seal water, lubrication, and other auxiliary equipment that are required for the system, subsystem, division, component, or device to perform its specified safety function(s) are also capable of performing their related support function(s).
PHYSICS TESTS	PHYSICS TESTS shall be those tests performed to measure the fundamental nuclear characteristics of the reactor core and related instrumentation. These tests are: a. Described in Chapter 14, Initial Tests and Operation, of the FSAR; b. Authorized under the provisions of 10 CFR 50.59; or c. Otherwise approved by the Nuclear Regulatory Commission.
RATED THERMAL POWER (RTP)	RTP shall be a total reactor core heat transfer rate to the reactor coolant of 2763 MWt.

(continued)

17. G2.1.2 001

Unit 1 has just declared a General Emergency due to offsite radioactivity release rates reaching 1000mR/hr.

Which ONE of the following describes the appropriate duties that would be performed by the Control Room Reactor Operator?

A. Perform offsite dose assessment calculations as appropriate.

B. Activate the Emergency Response Teams and establish communications with the NRC.

C. Complete the Emergency Page Announcement Guide as appropriate and initiate site evacuation per the Emergency Plan.

D. Assist the Emergency Director with protective action recommendations and take actions to mitigate the consequences of the event.

References: 73EP-EIP-005-0 Rev. 6 pg 3-7 of 8.

A. Incorrect since the Control Room Operator doesn't activate the Emergency Response Teams.

B. Correct answer.

C. Incorrect since the Control Room Operator doesn't initiate site evacuation.

D. Incorrect since the Control Room Operator doesn't perform protective action recommendations.

RO Tier:	T3	SRO Tier:	
Keyword:	RO DUTIES	Cog Level:	C/A 3.0/4.0
Source:	N	Exam:	HT02301
Test:	R	Misc:	TCK

48. G2.1.2 001

Unit 1 has just declared a General Emergency due to offsite radioactivity release rates reaching 1000mR/hr.

Which ONE of the following describes the appropriate duties that would be performed by the Control Room Reactor Operator?

A. Perform offsite dose assessment calculations as appropriate.

B. Activate the Emergency Response Teams and establish communications with the NRC.

C. Complete the Emergency Page Announcement Guide as appropriate and initiate site evacuation per the Emergency Plan.

D. Assist the Emergency Director with protective action recommendations and take actions to mitigate the consequences of the event.

References: 73EP-EIP-005-0 Rev. 6 pg 3-7 of 8.

A. Incorrect since the Control Room Operator doesn't activate the Emergency Response Teams.

B. Correct answer.

C. Incorrect since the Control Room Operator doesn't perform protective action recommendations.

D. Incorrect since the Control Room Operator doesn't initiate site evacuation.

RO Tier:	T3	SRO Tier:	
Keyword:	RO DUTIES	Cog Level:	C/A 3.0/4.0
Source:	N	Exam:	HT02301
Test:	R	Misc:	TCK

106. G2.1.2 001

Unit 1 has just declared a General Emergency due to offsite radioactivity release rates reaching 1000mR/hr.

Which ONE of the following describes the appropriate duties that would be performed by the Control Room Reactor Operator?

A. Activate the Emergency Response Teams and establish communications with the NRC.

B. Ensure START HIST light on the SPDS keyboard is lit and perform offsite dose assessment calculations as appropriate.

C. Assist the Emergency Director with protective action recommendations and take actions to mitigate the consequences of the event.

D. Complete the Emergency Page Announcement Guide as appropriate and initiate site evacuation per the Emergency Plan.

References: 73EP-EIP-005-0 Rev. 6 pg 3-7 of 8.

A. Incorrect since the Control Room Operator doesn't activate the Emergency Response Teams.

B. Correct answer.

C. Incorrect since the Control Room Operator doesn't perform protective action recommendations.

D. Incorrect since the Control Room Operator doesn't initiate site evacuation.

RO Tier:	T3	SRO Tier:	
Keyword:	RO DUTIES	Cog Level:	C/A 3.0/4.0
Source:	N	Exam:	HT02301
Test:	R	Misc:	TCK

6. G2.1.2 001

Unit 1 has just declared a General Emergency due to offsite radioactivity release rates reaching 1000mR/hr. DETERMINE the appropriate duties that would be performed by the Control Room Reactor Operator.

A. Activate the Emergency Response Teams and establish communications with the NRC.

B. Ensure START HIST light on the SPDS keyboard is lit and perform offsite dose assessment calculations as appropriate.

C. Assist the Emergency Director with protective action recommendations and take actions to mitigate the consequences of the event.

D. Complete the Emergency Page Announcement Guide as appropriate and initiate site evacuation per the Emergency Plan.

References: 73EP-EIP-005-0 Rev. 6 pg 3-7 of 8.

A. Incorrect since the Control Room Operator doesn't activate the Emergency Response Teams.

B. Correct answer.

C. Incorrect since the Control Room Operator doesn't perform protective action recommendations.

D. Incorrect since the Control Room Operator doesn't initiate site evacuation.

REFERENCE

7.0 PROCEDURE

7.1 SUPERINTENDENT OF SHIFT (SOS)

		NUE	ALERT	SITE-AREA	GENERAL
7.1.1	Review the event and classify the emergency in accordance with 73EP-EIP-001-0, Emergency Classification and Initial Actions.	X	X	X	X
7.1.2	Assume the duties of the ED in accordance with 73EP-EIP-004-0, Duties of Emergency Director.	X	X	X	X
7.1.3	After turnover of ED duties, perform the following:				
7.1.3.1	Direct operation of the plant to mitigate consequences of the event and to restore to a safe operating condition.	X	X	X	X
7.1.3.2	Analyze plant conditions and assist the ED with reclassifications and protective action recommendations.	X	X	X	X
7.1.3.3	Advise the ED and TSC Manager on degrading plant conditions, initiation of any release or changes in the magnitude of any release as soon as practical.	X	X	X	X
7.1.3.4	Ensure communications is established and maintained with the emergency response facilities (ERFs), NRC, and Security, as appropriate.		X	X	X
7.1.3.5	IF the following conditions are present which may prevent facility activation, protected area evacuation or site evacuation, THEN consult with the ED and Security prior to dispatching Control Room personnel, making PA announcements or augmenting on-shift staffing: • security events • severe weather conditions • other hazards that affect personnel safety		X	X	X

END OF 7.1, SUPERINTENDENT OF SHIFT (SOS)

7.2 SHIFT SUPERVISOR (SS)

		NUE	ALERT	SITE-AREA	GENERAL
7.2.1	IF the SOS is unavailable or incapacitated, assume the duties of SOS and perform the SOS duties in accordance with section 7.1 of this procedure. IF available, assign any qualified SRO to assume the unit SS duties.	X	X	X	X
7.2.2	Direct operation of the plant to mitigate consequences of the event and to restore to a safe operating condition.	X	X	X	X
7.2.3	Activate emergency response teams, IF necessary, by contacting the TSC (or the Health Physics office and other support departments IF the TSC is not activated) and provide directions regarding needed actions.	X	X	X	X
7.2.4	Assist in the performance of prompt offsite dose assessments, as needed.	X	X	X	X
7.2.5	Advise the SOS on any degradation of plant equipment, onset of a release, and changes in release magnitude as soon as possible.	X	X	X	X
7.2.6	Establish communications with the ERFs, Plant Security, the ED and the NRC as requested by SOS.		X	X	X

END OF 7.2, SHIFT SUPERVISOR (SS)

7.3 SHIFT SUPPORT SUPERVISOR (SSS)

		NUE	ALERT	SITE-AREA	GENERAL
7.3.1	Maintain accountability of all SOs dispatched from the Control Room.		X	X	X

NOTE:	All entries to areas with higher than normal radiological conditions must be dispatched from the OSC.

		NUE	ALERT	SITE-AREA	GENERAL
7.3.2	Ensure SOs are logged on the Operations rounds blanket RWP to track their dose.		X	X	X

NOTE:	SOs can be dispatched with no limitations provided radiological conditions are not degraded.

		NUE	ALERT	SITE-AREA	GENERAL
7.3.3	Dispatch SOs to perform various tasks to assist in mitigation of an emergency condition.		X	X	X
7.3.4	Coordinate with Control Room Operators to monitor ARM readings and plant conditions for the location where SOs have been dispatched. IF conditions change, THEN withdraw all personnel dispatched to that location.		X	X	X
7.3.5	Send extra SOs to the OSC as conditions allow. SOs for shutdown activities will remain in the Control Room.		X	X	X

END OF 7.3, SHIFT SUPPORT SUPERVISOR (SSS)

7.4 CONTROL ROOM OPERATOR

		NUE	ALERT	SITE-AREA	GENERAL
7.4.1	Ensure the START HIST light on the Safety Parameter Display System (SPDS) keyboard is lit, as appropriate. IF the light is off, depress the CTRL AND START HIST keys. Continue or cancel history, as directed by the SS.	X	X	X	X
7.4.2	Take actions to place the plant in a safe condition in accordance with annunciator response procedures, emergency operating procedures and Technical Specifications.	X	X	X	X
7.4.3	Periodically report plant status to the SS.	X	X	X	X
7.4.4	Notify the SS or SOS of any degradation to plant equipment.	X	X	X	X
7.4.5	Perform prompt offsite dose assessment calculations in accordance with 73EP-EIP-018-0, Prompt Offsite Dose Assessment, as required. Notify the SOS or SS of the onset of a release or any change in the magnitude of release. When the TSC is activated, turnover dose assessment duties to the TSC and exit procedure 73EP-EIP-018-0.		X	X	X
7.4.6	Notify the SSS of changes in plant conditions, radiological conditions or radiological releases.		X	X	X

7.4 CONTROL ROOM OPERATOR (CONT'D)

CAUTION:	CHANGES IN WIND DIRECTION MAY REQUIRE CHANGING RALLY POINTS AND EVACUATION ROUTES; THEREFORE, USE OF AVERAGE WIND DIRECTION IS ACCEPTABLE AND DESIRED. BE AWARE OF CHANGING CONDITIONS.

		NUE	ALERT	SITE-AREA	GENERAL
7.4.7	Complete form TRN-0144, Emergency Page Announcement Guide, filling in the required sections.	X	X	X	X
7.4.8	Obtain concurrence from the SOS for PA announcements being made for the following circumstances: • security events • severe weather conditions • other hazards that affect personnel safety.	X	X	X	X

NOTE:	The purpose of making announcements is to inform plant personnel of an event or change in conditions that warrants a response. The timeliness and accuracy of the announcement will have a direct effect on the implementation of that response. Announcements are normally concise statements containing sufficient detail to elicit the appropriate response.

		NUE	ALERT	SITE-AREA	GENERAL
7.4.9	Make the appropriate announcement and sound the applicable warning tone, as directed by the SOS or SS and using the applicable section of TRN-0144, Emergency Page Announcement Guide. The appropriate announcement/tone will be made as soon as practicable upon initial emergency declaration, and every thirty (30) minutes for the first two (2) hours of the declared emergency. After the first two (2) hours, repeat the announcement/ tone as directed by the SS.	X	X	X	X

END OF 7.4, CONTROL ROOM OPERATOR

112. G2.2.13 001

During an outage on Unit 1, the 1A Core Spray pump motor has been replaced. The maintenance department has asked to momentarily start the pump to check for proper rotation.

Which ONE of the following should the SS/TDO perform in order to support this?

A. Release the applicable subclearance that applies to the MWO being worked.

B. Release all subclearances that require the 1A Core Spray pump to be tagged.

C. Issue a temporary release after verifying all subclearance holders concur.

D. Ensure that the maintenance department is using personalized danger tags.

References: 30AC-OPS-001-0S Rev. 23 pg 62-65 of 94.
Previous exam 95-SRO-01 test question #89.
changed Shift Supervisor to SS/TDO and resequenced answers.

A. Incorrect since can't release subclearances until all work is done.

B. Incorrect since can't release subclearances until all work is done.

C. Correct answer.

D. Incorrect since still need temporary release from other holders.

RO Tier:	T3	SRO Tier:	
Keyword:	TAGOUT	Cog Level:	MEM 3.6/3.8
Source:	B	Exam:	HT02301
Test:	R	Misc:	TCK

QUESTIONS REPORT
for HT2002

1. G2.2.13 001

During an outage on Unit 1, the 1A Core Spray pump motor has been replaced. The maintenance department has asked to momentarily start the pump to check for proper rotation. In order to support this, the SS/TDO should:

A. release the applicable subclearance that applies to the MWO being worked.

B. release all subclearances that require the 1A Core Spray pump to be tagged.

C. issue a temporary release after verifying all subclearance holders concur.

D. ensure that the maintenance department is using personalized danger tags.

References: 30AC-OPS-001-0S Rev. 23 pg 62-65 of 94.
Previous exam 95-SRO-01 test question #89.
changed Shift Supervisor to SS/TDO and resequenced answers.

A. Incorrect since can't release subclearances until all work is done.

B. Incorrect since can't release subclearances until all work is done.

C. Correct answer.

D. Incorrect since still need temporary release from other holders.

Unit Two is operating at 100% RTP. The operating crew is placing the 2B RHR loop in service to support a HPCI surveillance next shift (last day for HPCI to be run) and the following conditions are noted:

Torus Water Temp: 85°F and steady.
The 2A loop of RHR is ***not*** available.
The breaker to 2E11-F024B is tripped and will ***not*** reset.

In order to place the 2B loop of RHR in torus cooling, the Shift Supervisor should:

a. direct the operator to manually open 2E11-F024B
b. with the SOS concurrence direct manually opening 2E11-F024B
c. initiate a temporary change to the procedure to allow manually opening 2E11-F024B
d. initiate a permanent change to the procedure to allow manually opening 2E11-F024B.

ANS: *c*
a,b incorrect, can only authorize not following procedure in an emergency
d incorrect, this is a temporary condition
NEW

Generic 2.2.11	***OBJ#*** 300.002.a.02	***REF*** LT-LP-30004	***COGNITIVE LVL*** 3

During an outage on Unit One, the 1A Core Spray pump motor has been replaced. The maintenance department has asked to momentarily start the pump to check for proper rotation. In order to support this, the Shift Supervisor should:

a. ensure that the maintenance department is using personalized danger tags
b. release the applicable subclearance that applies to the MWO being worked
c. release all subclearances that require the 1A Core Spray pump be tagged
d. issue a temporary release after verifying all subclearance holders concur.

ANS: *d*
a incorrect, personalized danger tags are allowed but still need temp release if other subclearances are on the pump.
b incorrect, can't release the subclearance until work is done
c incorrect, can't release all subclearances until the work is done
NEW

Generic 2.2.13	***OBJ#*** 300.016.a.01	***REF*** LT-LP-30004	***COGNITIVE LVL*** 2

8.10 TEMPORARY RELEASE

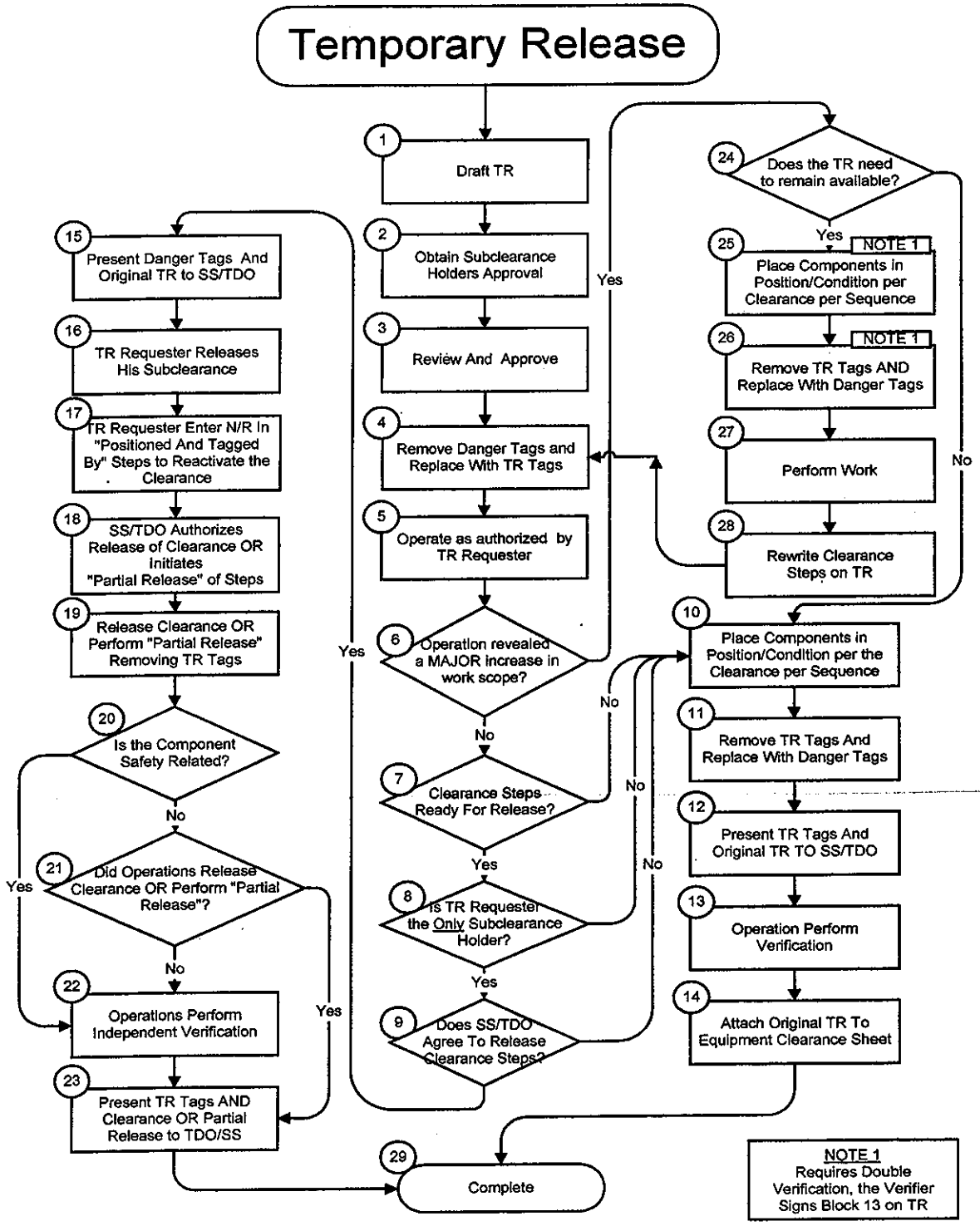

TEMPORARY RELEASE	**GUIDELINES** Components with more than one clearance tag must have a Temporary Release, OPS-0130, for each tag. A TR tag once hung will stay on the component until the work is complete or the clearance is reactivated. It will stay on the component whether it is running or off. It is the Subclearance holder's responsibility to ensure his Subclearance is reinstated prior to restarting work. If the Tags cannot be returned (e.g.: contaminated) to the SS/TDO, then the SS/TDO will be notified of the destruction of the tags in lieu of their return. Components Danger Tagged by use of another procedure may be TR'd. If a component is danger tagged as dictated by other procedures, then that component may be TR'd using the methods, cautions AND rules described in this procedure.
1 Draft TR	The Requester will draft the Temporary Release (TR) (see sample sheet in Attachment 8) as follows: Block 1: REQUESTER, Print and Sign Name/Ext/Date Block 2: CLEARANCE NUMBER, Enter Clearance number from Equipment Clearance sheet, OPS-0001 (see sample sheet in Attachment 6), Block 30. Block 3: DURATION, Approximate time TR will be in effect Block 4: EQUIPMENT AND MPL TO BE RELEASED FOR TEST, Enter information from Equipment Clearance sheet Block 1 or noun name and MPL of Component. Block 5: REASON FOR TEMPORARY RELEASE e.g. bumps motor for rotation, etc. Block 7: SUBCLEARANCE APPROVAL CONTINUATION SHEET (S) USED YES/NO, record/change the total number of Subclearance Approval Continuation Sheets used. IF required a Subclearance Approval Continuation Sheet, OPS-1041 will be used to provide more space list Subclearance holder for the components to be TR'd. If Continuation Sheet used circle YES, if not circle NO. Block 8: TAG NO., The Requester will list the Tag Numbers to be released from the Equipment Clearance sheet. Block 9: MPL/LOCATION OF COMPONENT, The requester will transfer from the Equipment Clearance sheet Block 32, MPL/LOCATION OF COMPONENT to the TR sheet Block 9, MPL/LOCATION OF COMPONENT. Block 10: TAGGED POSITION/CONDITION PER CLR, The requester will

	transfer the Equipment Clearance sheet Block 33, Tagged Position/Condition to the TR sheet Block 10, Tagged Position/Condition Per Clearance. Block 14: TEMPORARY RELEASE CONTINUATION SHEET (S) USED, record/change the total number of Temporary Release Continuation Sheet(s), OPS-1042, used. IF required a Temporary Release Continuation Sheet will be used to provide more space to list components to be TR'd.
2 Obtain Subclearance Holders Approval	Block 6 - SUBCLEARANCE HOLDERS APPROVAL OF TEMPORARY RELEASE, the Requester will obtain all Subclearance holders approval (signature/time/date) and Maintenance Subclearance sheets for the associated DANGER tags from the Equipment Clearance sheet.
3 Review And Approve	The Requester will submit the TR AND all Maintenance Subclearances Sheets for the associated tags to the SS/TDO for his review AND approval which includes insuring blocks 8, 9, and 10are correct. The SS/TDO will draft the Reactivate Clearance Steps sequence, Block 11. Authorization may be granted by fax at the SS/TDO discretion. The requester will fax the TR sheet to the SS/TDO and maintain the original TR sheet. The SS/TDO will perform the authorization of the faxed copy, sign and return the faxed copy to the TR Requester. The Requester will then write the name of the Authorizer, stating "BY FAX", sign and date the original TR sheet. Upon SS/TDO approval (block 15), all Maintenance Subclearance Sheets for the associated tags AND a copy of the TR will be maintained with the associated clearance AND placed in the TR Book. A copy/fax of the TR will be given to the Plant Operator (PO). The person performing the TR will keep the original TR in his possession until restoration is performed. While an Equipment Clearance is in the TR Book (Active TR On clearance) no Subclearance or TR s can be obtained on a TR'd step. While the clearance is in the TR book, additional Subclearances AND TRs can be added provided the new work does not conflict with an active TR.

4 Remove Danger Tags and Replace With TR Tags	Block 18: DANGER TAG REMOVED/TR TAG INSTALLED BY: The person performing the TR will remove the Danger tags and replace them with TR tags. The Plant Operator may remove Danger Tags, fill out, and install the TR tags associated with control switches in the Main Control Room (MCR). The Danger Tag will be attached to the CBO's copy of the TR sheet OR to the original TR.
5 Operate as authorized by TR Requester	The person in possession of the original TR may operate the equipment AND may authorize the operation of the equipment as long as he is in communication with the person operating the equipment (The TR Tag remains on the equipment during operation). The person in possession of the original TR may use the TR Tags for personnel protection to perform minor repairs (i.e. limit/torque switch adjustment, limit/torque switch replacement, swap leads on small motors, packing adjustments, minor leak repair, etc.).
6 Operation revealed a MAJOR increase in work scope?	Has the operation of the equipment revealed that more maintenance will be required than originally anticipated (i.e. large motor replacement, large valve operator replacement, pump/valve rebuild, swapping leads on a large motor, etc.).
7 Clearance Steps Ready For Release?	If the requester no longer requires a clearance on the component, the clearance steps may be released.
8 Is TR Requester the Only Subclearance Holder?	SS/TDO determines if Requester is the only Subclearance holder.
9 Does SS/TDO Agree To Release Clearance Steps?	At the Subclearance holder's request AND with the SS/TDO concurrence, the clearance steps can be released.
10 Place Components in Position/Condition per the Clearance per Sequence	Perform "Reactivate Clearance Steps" section of the TR sheet. Place the components in the TAGGED POSITION/CONDITION PER CLEARANCE Block 10, using the specified sequence, Block 11.

49. G2.2.3 001

The "B" CRD pump can be operated from the Remote Shutdown Panel AND the Control Room with the Emergency Transfer Switch (ETS) in a certain position.

Which ONE of the following describes the position of the Remote Shutdown Panel ETS and the Unit that is affected which will allow this to occur?

A.✓ ETS in NORM on Unit 1.

B. ETS in NORM on Unit 2.

C. ETS in EMERG on Unit 1.

D. ETS in EMERG on Unit 2.

References: SI-LP-05201 Rev. 00 pg 8 of 56.

A. Correct answer.

B,C and D. Incorrect since Unit 1 has a switch configuration which allows equipment to be operated from the control room or the RSDP with the Emergency Transfer Switch in the NORM position. If it is the EMERG position then the equipment can only be operated from the RSDP.

RO Tier:	T3	SRO Tier:	
Keyword:	REMOTE SHUTDOWN	Cog Level:	MEM 3.1/3.3
Source:	N	Exam:	HT02301
Test:	R	Misc:	TCK

114. G2.2.3 001

The "B" CRD pump can be operated from the Remote Shutdown Panel and the Control Room with the Emergency Transfer Switch (ETS) in a certain position.

Which ONE of the following describes the position of the Remote Shutdown Panel ETS and the Unit that is affected which will allow this to occur?

A.✓ ETS in NORM on Unit 1.

B. ETS in NORM on Unit 2.

C. ETS in EMERG on Unit 1.

D. ETS in EMERG on Unit 2.

References: SI-LP-05201 Rev. 00 pg 8 of 56.

A. Correct answer.

B,C and D. Incorrect since Unit 1 has a switch configuration which allows equipment to be operated from the control room or the RSDP with the Emergency Transfer Switch in the NORM position. If it is the EMERG position then the equipment can only be operated from the RSDP.

RO Tier:	T3	SRO Tier:	
Keyword:	REMOTE SHUTDOWN	Cog Level:	MEM 3.1/3.3
Source:	N	Exam:	HT02301
Test:	R	Misc:	TCK

QUESTIONS REPORT
for HT2002

1. G2.2.3 001

The "B" CRD pump can be operated from the Remote Shutdown Panel and the Control Room with the Emergency Transfer Switch (ETS) in a certain position.

Which ONE of the following describes the position of the Remote Shutdown Panel ETS and the Unit that is affected which will allow this to occur?

A. ETS in NORM on Unit 1.

B. ETS in NORM on Unit 2.

C. ETS in EMERG on Unit 1.

D. ETS in EMERG on Unit 2.

References: SI-LP-05201 Rev. 00 pg 8 of 56.

A. Correct answer.

B,C and D. Incorrect since Unit 1 has a switch configuration which allows equipment to be operated from the control room or the RSDP with the Emergency Transfer Switch in the NORM position. If it is the EMERG position then the equipment can only be operated from the RSDP.

The Emergency Transfer Switch (ETS) positions are NORM and EMERG.

1. For Unit 2, when the ETS is positioned to NORM, the equipment can only be operated from the MCR (the RSDP controls and indications are cut out). When positioned to EMERG, equipment can only be operated from the RSDP. The MCR controls and indications are cut out and an annunciator alarms in the MCR warning the operator that one or more transfer switches are in emergency. Depending on equipment, certain interlocks are bypassed (the interlocks that are bypassed are identified in the 31RS procedures).

2. When the Unit 1 Reactor Building RSDPs ETS are positioned to NORM, equipment can be operated from the MCR or the RSDPs. This equipment can be operated WITHOUT the transfer switch being in Emergency. Equipment controls and indication are available (except for the C and G SRVs) on RSDPs in the Reactor Building. The panels in the Reactor Building (P173, P001, and P002) have power to them under normal conditions and the lights are illuminated.

   When positioned to EMERG the equipment can only be operated from the RSDP. MCR control and indication are cut out and an annunciator from each panel alarms in the MCR to warn the operator that one or more transfer switches are in the Emergency position. Depending on equipment, certain interlocks are bypassed.

3. When the Unit 1 Diesel Building RSDPs ETS are positioned to NORM, the equipment can only be operated from the MCR. The Unit 1 panels in the Switchgear Rooms of the DG Bldg do not have power but the lights are dimly lit, due to power being back fed from the indicator light on the panels in the MCR. The transfer switch must be in Emergency to start the equipment. When positioned to EMERG, the equipment can only be operated from the RSDP. MCR control and indication are cut out and an annunciator from each panel alarms in the MCR to warn the operator that one or more transfer switches are in the Emergency position.

B. Residual Heat Removal System (RHR)

The RHR System may be used for restoring RWL inventory or to provide Reactor and Torus cooling.

1. The modes of RHR available from the RSDP include:

   a. Manual LPCI Injection

CONTENTS

1
2
3
4
5
6
7
8
9
10
11
12
13
14
15
16
17
18
19
20
21
22
23
24
25
26
27
28
29
30
31

QUESTIONS REPORT
for Revision4HT2002

1. 201002A3.03 001

Per 34GO-OPS-001-2S, Plant Startup, which ONE of the following statements describes how a Rod Drift Alarm test is performed?

A. Turn the Rod Drift Test Switch to test. Verify the ROD DRIFT annunciator alarms. Reset the drift alarm with the test switch.

B. While moving a Group 1 control rod, turn the Rod Select Power Switch to off. Verify the ROD DRIFT annunciator alarms. Turn the Rod Select Power Switch to on and reset the drift alarm with the Test Switch.

C. Select a Group 1 control rod and take the Rod Movement Control Switch to out-notch. During rod travel, place the Rod Drift Alarm Test Switch to test. Verify the ROD DRIFT annunciator alarms. Reset the drift alarm with the Test Switch.

D. Turn the Rod Movement Control Switch to out-notch. When the settle bus light de-energizes turn the Rod Drift Test Switch to test. Verify the ROD DRIFT annunciator alarms. Reset the drift alarm with the Test Switch.

References: SI-LP-05401 Rev. SI-00, pg. 8 of 26.
EO 001.010.a.12

A. Incorrect since the Rod Drift alarm will not actuate due to all control rods still at an even position.

B. Incorrect since turning the Rod Select Power to off will deselect any control rod and this does not guarantee that a Rod Drift alarm will occur.

C. Correct answer.

D. Incorrect since the procedure does not require the operator to wait until the settle light goes out.

RO Tier:	T2G1	SRO Tier:	T2G2
Keyword:	ROD DRIFT	Cog Level:	MEM 3.2/3.2
Source:	B	Exam:	HT02301
Test:	C	Misc:	TCK

2. 201002A3.03 001

Per 34GO-OPS-001-2S, Plant Startup, which ONE of the following statements describes how a Rod Drift Alarm test is performed?

A. Turn the Rod Drift Test Switch to test. Verify the ROD DRIFT annunciator alarms. Reset the drift alarm with the test switch.

B. While moving a central in-sequence control rod, turn the Rod Select Power Switch to off. Verify the ROD DRIFT annunciator alarms. Turn the Rod Select Power Switch to on and reset the drift alarm with the Test Switch.

C. Select a central in-sequence control rod and take the Rod Movement Control Switch to out-notch. During rod travel, place the Rod Drift Alarm Test Switch to test. Verify the ROD DRIFT annunciator alarms. Reset the drift alarm with the Test Switch.

D. Turn the Rod Movement Control Switch to out-notch. When the settle bus light de-energizes turn the Rod Drift Test Switch to test. Verify the ROD DRIFT annunciator alarms. Reset the drift alarm with the Test Switch.

References: SI-LP-05401 Rev. SI-00, pg. 8 of 26.
EO 001.010.a.12

A. Incorrect since the Rod Drift alarm will not actuate due to all control rods still at an even position.

B. Incorrect since turning the Rod Select Power to off will deselect any control rod and this does not guarantee that a Rod Drift alarm will occur.

C. Correct answer.

D. Incorrect since the procedure does not require the operator to wait until the settle light goes out.

RO Tier:	T2G1	SRO Tier:	T2G2
Keyword:	ROD DRIFT	Cog Level:	MEM 3.2/3.2
Source:	B	Exam:	HT02301
Test:	C	Misc:	TCK

3. 201002A3.03 001

Which ONE of the following statements describes how a Rod Drift Alarm test is performed?

A. Turn the Rod Drift Test Switch to test. Verify the ROD DRIFT annunciator alarms. Reset the drift alarm with the test switch.

B. While moving a central in-sequence control rod, turn the Rod Select Power Switch to off. Verify the ROD DRIFT annunciator alarms. Turn the Rod Select Power Switch to on and reset the drift alarm with the Test Switch.

C. Select a central in-sequence control rod and take the Rod Movement Control Switch to out-notch. During rod travel, place the Rod Drift Alarm Test Switch to test. Verify the ROD DRIFT annunciator alarms. Reset the drift alarm with the Test Switch.

D. Turn the Rod Movement Control Switch to out-notch. When the settle bus light de-energizes turn the Rod Drift Test Switch to test. Verify the ROD DRIFT annunciator alarms. Reset the drift alarm with the Test Switch.

References: SI-LP-05401 Rev. SI-00, pg. 8 of 26.
EO 001.010.a.12

A. Incorrect since the Rod Drift alarm will not actuate due to all control rods still at an even position.

B. Incorrect since turning the Rod Select Power to off will deselect any control rod and this does not guarantee that a Rod Drift alarm will occur.

C. Correct answer.

D. Incorrect since the procedure does not require the operator to wait until the settle light goes out.

RO Tier:	T2G1	SRO Tier:	T2G2
Keyword:	ROD DRIFT	Cog Level:	MEM 3.2/3.2
Source:	B	Exam:	HT02301
Test:	C	Misc:	TCK

QUESTIONS REPORT
for HT2002

1. 201002A3.03 001

From the following statements, SELECT the statement that best describes how a Rod Drift Alarm test is performed.

A. Turn the Rod Drift Test Switch to test. Verify the ROD DRIFT annunciator alarms. Reset the alarm with the test switch.

B. While moving a central in-sequence control rod, turn the Rod Select Power Switch to off. Verify the ROD DRIFT annunciator alarms. Turn the Rod Select Power Switch to on and reset the alarm with the Test Switch.

C. Select a central in-sequence control rod and take the Rod Movement Control Switch to out-notch. During rod travel, place the Rod Drift Alarm Test Switch to test. Verify the ROD DRIFT annunciator alarms. Reset the drift alarm with the Test Switch.

D. Turn the Rod Movement Control Switch to out-notch. When the settle bus light de-energizes turn the Rod Drift Test Switch to test. Verify the ROD DRIFT annunciator alarms. Reset the alarm with the Test Switch.

References: SI-LP-05401 Rev. SI-00, pg. 8 of 26.
EO 001.010.a.12

A. Incorrect since the Rod Drift alarm will not actuate due to all control rods still at an even position.

B. Incorrect since turning the Rod Select Power to off will deselect any control rod and this does not guarantee that a Rod Drift alarm will occur.

C. Correct answer.

D. Incorrect since the procedure does not require the operator to wait until the settle light goes out.

a. When a control rod movement is at any other reed switch other than an even reed switch position, a rod drift alarm occurs unless the rod drift is bypassed for that control rod.

Drift alarm senses power to the insert, withdraw and settle buses. The alarm is bypassed when any of the three are energized for that rod. A rod drifting while other normal rod movement is being conducted will still initiate a "ROD DRIFT" alarm.

NOTE: The rod drift alarm is bypassed for a control rod when that rod is being moved by Control Rod Hydraulics. This is a function performed by the reactor manual control system timer.

NOTE: A rod drift annunciator will alarm if a Non-Moving control rods present position even reed switch fails. This has happened at Plant Hatch.

b. When a drift alarm does occur, the test switch allows the alarm to be reset when the control rod is at an "even" notch position and the test switch is turned to the "RESET" position.

c. To test the rod drift alarm, the test switch is turned to the "TEST" position while a control rod is being moved with normal CRD hydraulic operations. By placing the switch in "TEST", the operator "bypasses the bypass" which allows the rod drift alarm to be received when the rod leaves the even numbered reed switch position.

E. Timer Malfunction Select Block Switch

1. The purpose of this switch is to test the operation of the auxiliary timer and select block functions.

Note: A select block is an interlock which de-energizes the select power to the select matrix, thus de-energizing the selected rod and preventing any further selection of rods until the block has been cleared.

2. The switch has the following three positions:

a. "TEST"

b. "OFF"

201002

Question # LT-LP-001010-0006 **Objective:** 001.010.A.12

Media # LT-LP-05401-02

From the following statements, SELECT the statement that best idescribes how a Rod Drift Alarm test is performed.

a. Turn the Rod Drift Test Switch to test. Verify the ROD DRIFT annunciator alarms. Reset the alarm with the Test Switch.

b. Turn the Rod Movement Control Switch to out notch, when the settle bus light de-energizes, turn the Rod Drift Test Switch to test. Verify the ROD DRIFT annunciator alarms. Reset the alarm with the Test Switch.

c. While moving a central insequence rod, turn the Rod Select Power Switch to off. Verify the ROD DRIFT annunciator alarms. Turn rod select power to on and reset the alarm with the Test Switch.

d. Select a central in-sequence control rod and take the Rod Movement Control Switch to out-notch. During rod travel, place the Rod Drift Alarm Test Switch to test. Verify the ROD DRIFT annunciator alarms. Reset the drift alarm with the Test Switch.

Answer: D.

4. 202001A1.07 001

Which ONE of the following occurs when Recirculation Pump speed is increased?

A. There is a temporary increase in core void content which causes a decrease in moderator density with a resultant decrease in neutron moderation. The steam generation rate decreases which causes a positive reactivity effect.

B. There is a temporary decrease in core void content which causes an increase in moderator density with a resultant increase in neutron moderation. The steam generation rate increases which causes a negative reactivity effect.

C. There is a temporary decrease in core void content which causes an increase in moderator density with a resultant increase in neutron moderation. The steam generation rate decreases which causes a positive reactivity effect.

D. There is a temporary increase in core void content which causes a decrease in moderator density with a resultant decrease in neutron moderation. The steam generation rate increases which causes a negative reactivity effect.

References: SI-LP-00401-01 Rev. SI-01 Pg 9 of 62
FSAR Section 7.7.2, Recirculation Flow Control System

A. Incorrect since increasing recirc pump speed will decrease core void content.

B. Correct answer.

C. Incorrect since increasing Recirc Pump speed causes the steam generation rate to increase which adds negative reactivity.

D. Incorrect since increasing recirc pump speed will decrease core void content.

RO Tier:	T2G2	SRO Tier:	T2G2
Keyword:	RECIRC	Cog Level:	C/A 2.7/2.8
Source:	B	Exam:	HT02301
Test:	C	Misc:	TCK

QUESTIONS REPORT
for HT2002

1. 202001A1.07 001

Which one of the following occurs when Recirculation Pump speed is increased?

A. There is a temporary increase in core void content which causes a decrease in moderator density with a resultant decrease in neutron moderation. The steam generation rate decreases which causes a positive reactivity effect.

B. There is a temporary decrease in core void content which causes an increase in moderator density with a resultant increase in neutron moderation. The steam generation rate increases which causes a negative reactivity effect.

C. There is a temporary decrease in core void content which causes an increase in moderator density with a resultant increase in neutron moderation. The steam generation rate decreases which causes a positive reactivity effect.

D. There is a temporary increase in core void content which causes a decrease in moderator density with a resultant decrease in neutron moderation. The steam generation rate increases which causes a negative reactivity effect.

References: SI-LP-00401-01 Rev. SI-01 Pg 9 of 62
FSAR Section 7.7.2, Recirculation Flow Control System

A. Incorrect since increasing recirc pump speed will decrease core void content.

B. Correct answer.

C. Incorrect since increasing Recirc Pump speed causes the steam generation rate to increase which adds negative reactivity.

D. Incorrect since increasing recirc pump speed will decrease core void content.

7.7.2 RECIRCULATION FLOW CONTROL SYSTEM

The objective of the RFCS is to control reactor power level over a limited range by controlling the flowrate of the reactor recirculating water.

7.7.2.1 Design Basis

The RFCS functions so that no anticipated operational occurrence (AOO) resulting from a malfunction in the RFCS can result in damaging the fuel or exceeding nuclear system pressure limits. The RFCS is designed to allow both manual and automatic recirculation flow adjustment, thereby enabling manual control of reactor power level and automatic load following. The automatic load-following capability is not used at Plant Hatch.

7.7.2.2 System Description

Each recirculation pump is started and accelerated to a speed equal to 30% of rated speed with the discharge valve closed. The discharge valve is opened and the flow increased by increasing pump speed. Control can be transferred to the master controller when the recirculation pump speed reaches the lower speed demand limiter range.

Depending on whether the unit is operating in one recirculation loop operation or two recirculation loop operation, reactor recirculation flow is changed by adjusting the speed of one or both of the two reactor recirculation pumps. The RFCS controls the power supplies to the recirculation pump motors by adjusting the frequency of the electrical power supplies to the recirculation pump motors. Thus, the RFCS can effect changes in reactor power level.

Control of pump speed, and thus core flow, is such that at various control rod patterns, different power level changes can be accommodated. For a rod pattern (called the rated pattern) where rated power accompanies 100% flow, power change control down to ~ 65% of full power is possible by use of flow variation. At other rod patterns, power control is over a range of ~ 35% of the maximum operating power level for that rod pattern. Thus, the power control range is approximately a constant fraction of operating power but a variable absolute power range. A lower limit exists on flow control capability, below which control by flow is not permitted.

An increase in recirculation flow temporarily reduces the void content of the moderator by increasing the flow of coolant through the core. The additional neutron moderation increases the reactivity of the core, which causes the reactor power level to increase. The increased steam generation rate increases the steam volume in the core with a consequent negative reactivity effect, and a new steady-state power level is established. When recirculation flow is reduced, the power level is reduced.

Drawing nos. H-24713 through H-24716 and H-24760 illustrate how the RFCS operates in conjunction with the turbine controls.

4. Although the pumps are located approximately 60 feet below the normal water level, this alone will not assure sufficient NPSH for all operating conditions. During normal operations, feedwater subcools the inlet flow to the pumps to prevent cavitation. During plant startup, there is no feedwater flow, therefore, the recirc pumps are limited to a speed of 22%. This speed is low enough to prevent pump cavitation, yet high enough to prevent cold water stagnation in the lower head region due to CRD cooling water flow.

Fig 3

5. Figure 3 represents the typical available NPSH vs. required NPSH for the recirc pumps from cold startup to rated conditions. With the reactor coolant at 140°F the total is about 60 feet (static head of water + velocity head). As a reactor heatup is accomplished, the available NPSH follows the path of A to B (decreases). This is a result of the coolant becoming less dense during the heatup. At point B, it is assumed that the heatup is completed (rated temperature and pressure) and no feed flow present.

6. The path of point B to C represents the power escalation from rated temperature and about 1% power to approximately 65% power. During this period, recirc pump speed is constant, but control rods are pulled and the steaming rate increases from the vessel with an increase of feed flow to the reactor vessel. This feed flow tends to subcool the water in the reactor downcomer region causing a rise in NPSH.

7. At approximately 65% power (point C) 100% control rod pattern is assumed and recirc pump speed is increased to increase flow and power in the core. The increase in pump speed causes an increase in required NPSH and also results in a drop on the actual available NPSH, represented by the plot of C to D, because of the rapidly increasing recirculation ratio in the core. NPSH decreases due to increasing the ratio of the flow of coolant from the core (hot water) into the downcomer to the flow of feedwater (cooler water) into the downcomer.

8. The minimum required NPSH at rated conditions is approximately 430 feet. The available NPSH is approximately 450 feet (static head + velocity head + subcooling). To ensure that recirc speed is not increased until sufficient feedwater flow is established to maintain the required NPSH during high temperature core conditions, and interlock termed # 1 speed limiter limits the recirc pump speed to 22% until total feedwater flow to the vessel is greater than 20 % of rated. Studies have shown that it is probable the recirc pumps could be operated as high as 40% speed with no feedwater flow without cavitation occurring. The speed limit of 22% is therefore conservative.

QUESTIONS REPORT
for Revision2 HT2002

1. 202002K3.05 001

Unit 2 is at 100% RTP with the following conditions:

Both Reactor Recirc Pumps are in Master-Manual Control
A fuse for the power supply to the Master Controller fails
The Master Controller **de-energizes**

Which ONE of the following describes the Reactor Recirculation System response?

A. Speed will remain constant because both scoop tubes lock up.

B. BOTH Recirc Pumps will decrease speed to approximately 44% speed.

C. Both Recirc Pumps will decrease to approximately 22% speed.

D. The controller will lock in its previous signal and maintain pump speed constant.

References: SI-LP-00401-01 Rev. SI-01 pg 42 of 62.
On test SR 95-01 question 4
Updated correct answer per lesson plan. Resequenced answers.

A. Incorrect since the speed control signal was not lost.

B. Correct answer.

C. Incorrect because of clamped lower limit is 45% speed on the master controller.

D. Incorrect since this happens on a loss of signal from controller (not power loss).

RO Tier:	T2G1	SRO Tier:	T2G1
Keyword:	RECIRC	Cog Level:	C/A 3.2/3.3
Source:	B	Exam:	HT02301
Test:	C	Misc:	TCK

5. 202002K3.05 001

Unit 2 is at 100% RTP with the following conditions:

Both Reactor Recirc Pumps are in Master-Manual Control
A fuse for the power supply to the Master Controller fails
The Master Controller **de-energizes**

Which ONE of the following describes the Reactor Recirculation System response?

A. Speed will remain constant because both scoop tubes lock up.

B. The "2A" Recirc pump scoop tube locks up and the "2B" Recirc pump will run back to approximately 45% speed.

C. Both Recirc Pumps will run back to approximately 22% speed.

D. The controller will lock in its previous signal and maintain pump speed constant.

References: SI-LP-00401-01 Rev. SI-01 pg 42 of 62.
On test SR 95-01 question 4
Updated correct answer per lesson plan. Resequenced answers.

A. Incorrect since the speed control signal was not lost.

B. Correct answer.

C. Incorrect because of clamped lower limit of 45% on master controller.

D. Incorrect since this happens on a loss of signal from controller (not power loss).

RO Tier:	T2G1	SRO Tier:	T2G1
Keyword:	RECIRC	Cog Level:	C/A 3.2/3.3
Source:	B	Exam:	HT02301
Test:	C	Misc:	TCK

QUESTIONS REPORT
for HT2002

1. 202002K3.05 001

Unit 2 is at 100% RTP with the following conditions:

Both Reactor Recirc Pumps are in Master-Manual Control
A fuse for the power supply to the Master Controller fails
The Master Controller **de-energizes**

SELECT the Reactor Recirculation System response:

A. Speed will remain constant because both scoop tubes lock up.

B. The "2A" Recirc pump scoop tube locks up and the "2B" Recirc pump will run back to approximately 45% speed.

C. Both Recirc Pumps will run back to approximately 20% speed.

D. The controller will lock in its previous signal and maintain pump speed constant.

References: SI-LP-00401-01 Rev. SI-01 pg 42 of 62.
On test SR 95-01 question 4
Updated correct answer per lesson plan. Resequenced answers.

A. Incorrect since the speed control signal was not lost.

B. Correct answer.

C. Incorrect because of clamped lower limit of 45% on master controller.

D. Incorrect since this happens on a loss of signal from controller (not power loss).

D. System response to a loss of Instrument Bus "A".

Upon failure of R25-S064 (Instrument bus "A"), the Recirc Master Controller (2B31-R620) and the "A" M/A Station Controller (B31-R621A) lose power. The Master Controller output fails downscale and sends a 44% speed signal to the individual controllers. The "A" Recirc pump receives a scoop tube lock condition due to the loss of the Instrument bus, but the "B" Recirc Pump decreases its output as the Master Controller output decreases (failed downscale). The Recirc pumps end up with a large mismatch.

THIS IS THE END OF THE REACTOR RECIRCULATION SYSTEM INFORMATION DOCUMENT

3. The 2A Emergency Diesel Generator (EDG) is in TEST and the operator has just closed the diesel output breaker to parallel the EDG to the bus, when he notices the following:

EDG Frequency	60 Hz
EDG Kilowatts	5 Kw
EDG Kilovars	4500 Kvar

Attempting to lower the Kvars on the EDG, the operator takes the SPEED ADJUST switch to lower. SELECT the EDG response to this action:

a. Frequency will decrease rapidly.
b. Kilovars will decrease rapidly.
c. The EDG will slip a pole.
d. The EDG will trip on reverse power.

ANS: *d*
a incorrect because frequency will be locked into the grid's frequency when in parallel
b incorrect because the speed adjust does not adjust reactive load (volt adjust does)
c incorrect because a low generator field strength is what causes a pole to slip.
NEW

KA# 264000 A4.01	***OBJ#*** 028.023.a.02	***REF*** LT-LP-02801	***COGNITIVE LVL*** 3

4. Unit Two is at 100% RTP with the following conditions:

Both Reactor Recirc Pumps are in Master-Manual Control
A fuse for the power supply to the Master Controller fails
The Master Controller ***de-energizes***.

SELECT the Reactor Recirculation System response:

a. the controller will lock in its previous signal and maintain pump speed constant.
b. both recirc pumps will run back to approximately 45% speed.
c. both recirc pumps will run back to approximately 20% speed.
d. speed will remain constant because both scoop tubes lock up.

ANS: *b*
a incorrect because this happens on a loss of signal from controller (not power loss)
c incorrect because of clamped lower limit of 45% on master controller.
d incorrect because the speed control signal was not lost.
NEW

KA# 202002 K3.05	***OBJ#*** 004.001.a.02	***REF*** LR-LP-00401	***COGNITIVE LVL*** 3

6. 203000A1.01 001

During an ATWS on Unit 2, the Shift Supervisor directs injection to be terminated except for Boron, CRD and RCIC. He then directs Emergency Depressurization of the RPV because reactor water level CANNOT be maintained above -185 inches.

Which ONE of the following describes when the Shift Supervisor should recommence injection?

A. When reactor pressure is less than MARPVFP using RHR or Condensate pumps.

B. As soon as RPV pressure decreases to within the shutoff head of the RHR and Core Spray pumps.

C. When reactor pressure is less than MARPVFP using both Core Spray and RHR pumps.

D. As soon as RPV pressure decreases to within the shutoff head of the RHR and Condensate pumps.

References: LR-LP-20327 Rev. 07, pg 30 - 35 of 53
CP-3 ATWS LEVEL CONTROL
EO 201.091.a.15

A. Correct answer.

B. Incorrect since all injection is prevented except Boron, CRD and RCIC until MARPVFP is reached and Table 13 systems are available.

C. Incorrect since Core Spray is not a Table 13 system.

D. Incorrect since all injection is prevented except Boron, CRD and RCIC until MARPVFP is reached and Table 13 systems are available.

RO Tier:	T2G1	SRO Tier:	T2G1
Keyword:	ATWS CONTROL	Cog Level:	MEM 4.2/4.3
Source:	B	Exam:	HT02301
Test:	C	Misc:	TCK

QUESTIONS REPORT
for HT2002

1. 203000A1.01 001

During an ATWS on Unit 2, the Shift Supervisor directs injection to be terminated except for Boron, CRD and RCIC. He then directs Emergency Depressurization of the RPV because reactor water level CANNOT be maintained above -185 inches. The Shift Supervisor should recommence injection:

A. When reactor pressure is less than MARPVFP using RHR or Condensate pumps.

B. As soon as RPV pressure decreases to within the shutoff head of teh RHR and Core Spray pumps.

C. When reactor pressure is less than MARPVFP using both Core Spray and RHR pumps.

D. As soon as RPV pressure decreases to within the shutoff head of the RHR and Condensate pumps.

References: LR-LP-20327 Rev. 07, pg 30 - 35 of 53
CP-3 ATWS LEVEL CONTROL
EO 201.091.a.15

A. Correct answer.

B. Incorrect since all injection is prevented except Boron, CRD and RCIC until MARPVFP is reached and Table 13 systems are available.

C. Incorrect since Core Spray is not a Table 13 system.

D. Incorrect since all injection is prevented except Boron, CRD and RCIC until MARPVFP is reached and Table 13 systems are available.

Question # LT-LP-201091-0004 **Objective:** 201.091.A.15

Media # LR-LP-20327-06

During an ATWS on Unit 2, the Shift Supervisor directs injection to be terminated and Emergency Depressurizes the RPV because reactor water level can NOT be maintained above -185 inches. The Shift Supervisor should recommence injection:

a. When Reactor pressure is less than MARPVFP using both Core Spray and RHR pumps.

b. When reactor pressure is less than MARPVFP using RHR or Condensate pumps.

c. As soon as RPV pressure decreases to within the shutoff head of the RHR and Core Spray pumps.

d. As soon as RPV pressure decreases to within the shutoff head of the RHR and Condensate pumps.

(c) is the wrong answer. See documents.

Answer: c (1.00 pt.)

Injection systems need to be controlled to prevent rapid injection.

Note that the **Emergency Depressurization** requirement will trigger the first OVERRIDE statement in section RC/P and thus send the operator to the CP-1 flowchart. This will render section RC/P no longer effective until reactor shutdown is achieved.

Note also that if the RPV must be rapidly depressurized, the systems used to control RWL must be operated so as to minimize rapid injection of water into the core region as pressure decreases.

Terminate and prevent ALL injection into RPV per 31EO-EOP-113-2S EXCEPT from: o Boron Injection Systems o CRD o RCIC

Discuss why injection is terminated and prevented.

Injection into the RPV is terminated and prevented, while **Emergency Depressurization** proceeds, in order to prevent uncontrolled injection of large amounts of cold water as RPV pressure decreases below the shutoff head of operating system pumps.

- This could result in a large power excursion caused by cold water addition and boron dilution.

EO 20

Point out that the operator must be aware of systems that may not be injecting now but will as pressure is reduced.

Its important that operators be aware of systems that may not be injecting at the time this step is reached, but might inject as RPV pressure is lowered.

- Examples include Condensate, RHR, and Core Spray.

Injection from these systems must also be terminated and prevented to prevent uncontrolled injection as RPV pressure drops.

EO 21a and b

Discuss why boron injection and CRD are allowed to continue.

Injection from boron injection systems and CRD is not terminated because operation of these systems may be needed to establish and maintain the reactor shutdown.

- Further, the injection flow rates from these systems are small compared to those of the other systems used to control RWL.

EO 21c

Discuss why RCIC is allowed to continue.

Injection from RCIC is not terminated because the injection flow rate from this system is small. Continued operation of the turbine aids in depressurizing the RPV, and operation during RPV depressurization is not expected to result in significant injection flow rate variations.

WAIT UNTIL

reactor pressure
is below
Minimum Alternate RPV Flooding Pressure
(Table 10)
OR
NO SRV can be opened

While depressurizing, the core is adequately cooled, regardless of level, as long as pressure is above MARPVFP.
Define Minimum Alternate RPV Flooding Pressure

As long as RPV pressure remains above the **Minimum Alternate RPV Flooding Pressure,** the core is adequately cooled by steam flow through the open SRVs even if the core is not completely covered.

The **Minimum Alternate RPV Flooding Pressure (MARPVFP)** is defined to be the lowest RPV pressure at which steam flow through open SRVs is sufficient to preclude any clad temperature from exceeding 1500°F, even if the reactor core is not completely covered.

- Thus, so long as RPV pressure does not decrease below the **MARPVFP**, adequate core cooling is assured through steam cooling.

FIG 01

FIG 01 illustrates the manner in which the **Minimum Alternate RPV Flooding Pressure** is determined.

Curve A - Steam flow required.

- Curve A is the steam flow required to remove core heat by steam cooling with the temperature of the hottest fuel rod **not exceeding 1500°F.**

Curve D1-DX - Steam flow through SRVs as a function of RPV pressure.
Intersection is MARPVFP for that number of open SRVs.

- Curve D1 through DX are plots of steam flow through one of X number of open SRVs as a function of RPV pressure.

The RPV pressure which corresponds to the intersection of Curve A with each Curve D is defined to be the **Minimum Alternate RPV Flooding Pressure** for the given number of open SRVs.

EO 12b.

Note that Minimum Alternate RPV Flooding Pressure provides adequate core cooling via the "Steam Cooling With Injection Method".

- Even though most injection into the vessel has been stopped, the determination of **Minimum Alternate RPV Flooding Pressure** assumes some injection. In any case, this is a conservative assumption because it means that the water available in the vessel to produce steam is farther from saturation conditions because of the assumed, subcooled injected water.

These steps used any time Emergency Depressurization is required and CP-3 is in progress.

It should also be stressed that these steps are used any time emergency depressurization is required and CP-3 is in progress. The inability to maintain RWL above -185 inches is just one such case.

- Using these steps during emergency depressurization with an ATWS assures that power excursions do not occur because of uncontrolled injection.

If < MARPVFP, adequate core cooling is not assured.

When RPV pressure drops below the **Minimum Alternate RPV Flooding Pressure**, adequate core cooling by this method is no longer assured and injection into the RPV must be re-established to maintain adequate core cooling.

Likewise, if no SRV can be opened, this method of core cooling can not be established and injection into the RPV must be re-started to maintain adequate core cooling.

EO-22

Table 10 Minimum Alternate RPV Flooding Pressure

Number of SRVs	MARPVFP
7 or more	100
6	120
5	140
4	180
3	250
2	380
1	760

CAUTION # 6

Power excursion possible with rapid injection resulting in core damage.

Caution #6 warns the operator of the potential plant response if injection of cold, unborated water into the core is too rapid. This may result in a large increase in positive reactivity with an attendant reactor power excursion sufficient to substantially damage the core.

This Caution is applicable since power has been unintentionally choked through level reduction due to loss of makeup water.

Following depressurization, level is restored to maintain ACC.

At this point, the operator has completed the emergency depressurization and is ready to re-establish injection to maintain RWL. Over feed of the RPV could easily cause power to spike the APRMs (actual power levels may exceed 175% of rated).

Positive reactivity mechanisms:

There are several effects that will provide positive reactivity to the reactor due to restoring RWL:

1. Cold water
   - Colder water is being injected from the Torus, the Hotwell, or the CST.
2. Boron dilution
   - Boron that was possibly being injected will be flushed out of the core for a period of time and diluted, and
3. Natural circulation
   - The RWL rise may restore the circulation from the core through the steam separators and down to the jet pumps, thus returning the reactor to a natural circulation condition.

Pressure effects on reactivity.

Any pressure control problems that result in RPV pressure cycling on the SRVs (Low Low Set or manual SRV operation) will magnify power spikes due to positive reactivity feedback.

Injection must be controlled.

It is therefore imperative that RWL be restored in as controlled a manner as possible under these conditions.

SLOWLY raise injection to restore and maintain RWL between -185 in. and previously established level using Table 13 Systems Ignore NPSH and Vortex Limits

Following depressurization, RWL is restored to maintain ACC.

Injection into the RPV is re-established to maintain adequate core cooling.

Irrespective of whether the reactor is shutdown, **injection is controlled to make up the mass of steam being rejected through open SRVs** and, if possible, to keep the core submerged.

Inject slowly to preclude power excursion.

Injection is increased slowly to preclude the possibility of large reactor power excursions due to the rapid injection of relatively cold, unborated water under conditions where the reactor may not be shutdown.

Systems injecting outside the shroud are preferred.

The systems identified for use in controlling RWL are the same as those listed earlier.

ACC has priority over NPSH and Vortex limits.

- Use of these systems is given preference to mix cold, unborated water injected into the RPV with warm, borated water prior to it reaching the core. The MSCRWL is specified as the lower limit for control of RWL to provide the widest possible control band.

EO 23

Systems may be operated even if pump NPSH or Vortex Limits are exceeded.

- The undesirable consequence of uncovering the core and losing adequate core cooling outweighs the risk of any equipment damage which could result if NPSH or Vortex Limits are exceeded.

- Immediate and catastrophic failure of the system pumps is not expected should operation beyond these limits be required; rather, degraded system performance could occur after prolonged operation under these conditions.

With RPV pressure below **Minimum Alternate RPV Flooding Pressure** and adequate core cooling not assured because of low RWL, the operator must inject water to gain adequate core cooling and yet inject slowly enough to prevent a large power excursion.

EO 24

Any one pump allowed by the EOPs injecting at Rated flow (i.e.; RHR 7700 GPM).

Currently, information from GE states that one pump injecting into the vessel at rated flow should not cause a power excursion to occur. When re-establishing injection to **"SLOWLY"** raise RWL, any one pump allowed by the EOPs injecting at rated flow, should be established first.

Discuss Operations Standards

*"As soon as RPV pressure is below the **Minimum Alternate RPV Flooding Pressure**, start injection with one RHR pump at rated, two RHR pumps with total flow not to exceed 7700 gpm, or one Condensate pump at rated. If RWL does not increase in a timely manner, start another pump without excessive delay. If an additional pump must be started, it should be started on minimum flow and carefully brought on line.*

Limit power excursions while increasing RWL.

Note that if RWL is above -185 inches, the core is adequately cooled during an ATWS and preventing a power excursion becomes the major concern.

IF required to restore and maintain RWL above -185 in.

THEN slowly raise injection, using the following systems:

- o Core Spray per 34SO-E21-001-2S (Ignore NPSH and Vortex Limits)
- o RHRSW crosstie per 31EO-EOP-110-2S
- o Fire System per 31EO-EOP-110-2S
- o ECCS Keep-full per 31EO-EOP-110-2S
- o Condensate transfer per 31EO-EOP-110-2S

EO 25

If RWL **cannot** be restored and maintained above the **MSCRWL** using the preferred systems, use of additional systems is then required.

If preferred systems fail to restore level, then alternate systems are attempted.

The systems identified earlier in the EOP were those injecting outside the shroud.

Maintain RWL between -185 in. and +50 in. with TABLE 13 Systems

E

F

G

LEVEL CONTROL WHEN EMERGENCY DEPRESS IS REQUIRED

L

EMERGENCY DEPRESS IS REQUIRED

Terminate and prevent ALL injection into RPV per 31EO-EOP-113-2S EXCEPT from:

- Boron Injection Systems
- CRD
- RCIC

WAIT UNTIL

reactor pressure is below Minimum Alternate RPV Flooding Pressure (Table 10)

OR

NO SRV can be opened

6

With pressure b
Minimum Alterna
and water level
adequate core c

SLOWLY raise injection to restore and maintain RWL between -185 in. and previously established level using Table 13 Systems

Ignore NPSH and Vortex Limits

Slowly raise in
pump at rated
If level does n
manner, then s
excessive dela

IF required to restore and maintain RWL above -185 in.

THEN slowly raise injection, using the following systems:

- Core Spray per 34SO-E21-001-2S (Ignore NPSH and Vortex Limits)
- RHRSW crosstie per 31EO-EOP-110-2S
- Fire system per 31EO-EOP-110-2S
- ECCS Keep-full per 31EO-EOP-110-2S
- Condensate transfer per 31EO-EOP-110-2S

EMERGENCY DEPRESS IS REQUIRED

GO TO point L
on this sheet

Table 13 CP-3 INJECTION SYSTEMS 3 4 5 6

- Condensate/feedwater per 34SO-N21-007-2S
- CRD per 34SO-C11-005-2S
- RCIC, with suction from the condensate storage tank if available, per 34SO-E51-001-2S. If necessary, defeat any or all of the following:
  - -high torus water level suction transfer logic per 31EO-EOP-100-2S
  - -low reactor pressure isolation per 31EO-EOP-100-2S
  - -high area temperature isolation per 31EO-EOP-100-2S
- HPCI, with suction from the condensate storage tank if available, per 34SO-E41-001-2S. If necessary, defeat one or both of the following:
  - -high torus water level suction transfer logic per 31EO-EOP-100-2S
  - -high area temperature isolation per 31EO-EOP-100-2S
- LPCI, with injection through the heat exchangers as soon as possible per 34SO-E11-010-2S
- RHR Crosstie per 31EO-EOP-110-2S

1 CAUTION 1

RWL instrument may be used only if BOTH of the following exist
- there is no indication of erratic instrument behavior
- the instrument reads above minimum level for the associated reference leg maximum run temperature

See 34AB-B21-002-2S for Caution 1

3 CAUTION 3

Operation of HPCI, RCIC, CS, or RHR with suction from the toru pump flow above the NPSH or vortex limit may result in equipm

4 CAUTION 4

Elevated torus pressure may trip the RCIC turbine on high exha of 40 psig

5 CAUTION 5

Operation of HPCI or RCIC turbines with suction temperature a may result in equipment damage

6 CAUTION 6

A rapid rise in injection into the RPV may induce a large power and result in substantial core damage

7	8	9	10	1

*12. Given a set of EOP actions taken to assure adequate core cooling, DETERMINE which of the following methods the steps represent: (201.093.A.10)

a. Core Submergence.
b. Steam Cooling With Injection.

*13. Given a list, IDENTIFY the statement that describes the reasons for maintaining RWL between -185 and +50 inches during an ATWS when the MSIVs are shut and primary containment is not threatened. (201.068.A.17)

*14. Given a list, IDENTIFY the statement the describes the reason for maintaining RWL between -100 and +50 inches during an ATWS when the MSIVs are open and primary containment is not threatened. (201.068.A.33)

15. Given an ATWS and 31EO-EOP-017-2S, "CP-3 ATWS Level Control," EVALUATE plant conditions and DETERMINE if RWL can be maintained above -100 inches when the MSIVs are open and primary containment is not threatened. (201.068.A.35)

16. Given an ATWS and 31EO-EOP-017-2S, "CP-3 ATWS Level Control," DETERMINE which Table 13 systems can be used to maintain RWL within a specified band. (201.068.A.18, 201.090.A.13, 201.091.A.14)

17. Given a list, RECOGNIZE the types of information that an operator needs to consider when determining whether or not RWL can be restored and/or maintained above a specified value during an ATWS. (201.068.A.34, 201.090.A.14, 201.091.A.15, 201.092.A.08)

*18. Given a list, IDENTIFY the statement that describes the purpose of injecting through the RHR heat exchangers as soon as possible when using RHR in the LPCI mode. (201.068.A.21, 201.090.A.18, 201.091.A.11)

19. Given an ATWS and 31EO-EOP-017-2S, "CP-3 ATWS Level Control," EVALUATE plant conditions and DETERMINE if RWL can be maintained above -185 inches with the RPV pressurized. (201.090.A.15)

*20. Given a list, IDENTIFY the statement that describes the plant response to Emergency Depressurizing the RPV during an ATWS before significant sources of injection are secured. (201.091.A.02)

13. 206000K6.08 001

Unit 2 has just experienced a transient with the following conditions present:

Reactor water level	-45" increasing
Reactor pressure	123 psig
Drywell pressure	18 psig
HPCI turbine exhaust diaphragm pressure	8 psig

Which ONE of the following indicates the proper HPCI lineup for the present conditions including the cause?

A.✓ F002 closed
F003 closed
F001 open
HPCI isolated on reactor low pressure with initiation signal still present.

B. F001 closed
F002 closed
F003 open
HPCI isolated on reactor low pressure with initiation signal still present.

C. F002 open
F003 open
Turbine Stop Valve open
HPCI should be injecting at full flow due to high drywell pressure.

D. F002 closed
F001 open
F006 closed
HPCI isolated on high turbine exhaust pressure with initiation signal still present.

References: SI-LP-00501 Rev 01 pg 30 - 33 of 46

A. Correct answer.

B. Incorrect since F001 should be open from initiation signal and F003 should be closed due to auto isolation signal.

C. Incorrect since HPCI should not be injecting due to auto isolation signal from low reactor pressure.

D. Incorrect since HPCI should not have isolated on high exhaust pressure (setpoint is 10 psig).

QUESTIONS REPORT
for HT2002

RO Tier:	T2G1	SRO Tier:	T2G1
Keyword:	HPCI	Cog Level:	C/A 3.4/3.4
Source:	N	Exam:	HT02301
Test:	C	Misc:	TCK

QUESTIONS REPORT
for HT2002

1. 206000K6.08 001

Unit 2 has just experienced a transient with the following conditions present:

Reactor water level	-45" increasing
Reactor pressure	123 psig
Drywell pressure	18 psig
HPCI turbine exhaust diaphragm pressure	8 psig

DETERMINE the proper HPCI lineup for the present conditions including the cause.

A. F002 closed
F003 closed
F001 open
HPCI isolated on reactor low pressure with initiation signal still present.

B. F001 closed
F002 closed
F003 open
HPCI isolated on reactor low pressure with initiation signal still present.

C. F002 open
F003 open
Turbine Stop Valve open
HPCI should be injecting at full flow due to high drywell pressure.

D. F002 closed
F001 open
F006 closed
HPCI isolated on high turbine exhaust pressure with initiation signal still present.

References: SI-LP-00501 Rev 01 pg 30 - 33 of 46

A. Correct answer.

B. Incorrect since F001 should be open from initiation signal and F003 should be closed due to auto isolation signal.

C. Incorrect since HPCI should not be injecting due to auto isolation signal from low reactor pressure.

D. Incorrect since HPCI should not have isolated on high exhaust pressure (setpoint is 10 psig).

SYSTEM INITIATIONS
TABLE 5

HPCI System initiations

A. -35" Reactor water level

B. 1.85 psig drywell pressure

System Response

1. F001 auto-opens.
2. F025 and F026 close.
3. F028 and F029 close.
4. Barometric Condenser Vacuum Pump auto-starts.
5. F059 auto-opens.
6. If F041 and F042 are not fully open, F004 opens.
7. Auxiliary Oil Pump auto-starts.
8. Turbine Stop Valve opens.
9. With sufficient oil pressure, Turbine Control Valve begins to open and roll the turbine.
10. F007 opens if shut.
11. F008 and F011 auto-close if open.
12. Once Turbine Stop and Steam Supply Valves are 10% open, F006 opens.
13. Once turbine is rolling and discharge pressure reaches 125 psig, F012 opens.
14. As turbine begins to increase speed, Shaft Oil Pump discharge pressure increases and Aux Oil Pump stops at approximately 90 psig.
15. At first, since system injection flow is at zero, the ramp generator will limit the governor valve opening; until the flow controller takes control to limit the peak speed at startup to about 2000 rpm.

TRIPS AND SETPOINTS
TABLE 6

Unit 1 and Unit 2 HPCI Turbine Trips:

1. Turbine Over-speed (mechanical) 5000 rpm (125%).
2. Turbine exhaust press high 140 psig.
3. Pump suction press low 10" Hg Vac.
4. Reactor Water level high +51.7" (51.5" Unit 1).
5. Any auto system isolation.
6. Manual trip pushbutton on H11-P601 is used to trip the turbine from the Control Room if a malfunction should occur or to secure the system after operation.
7. Local manual trip.

HPCI System Response to Turbine Trips:

1. Turbine Stop Valve closes.
2. Injection Valve (F006) closed when Turbine Stop Valve fully closed.
3. Minimum Flow Valve (F012) interlocked closed when Turbine stop Valve fully closed.
4. Auxiliary Oil Pump auto-starts at 39 psig oil pressure.

Reactor Water Level High Trip Difference:

1. Valves can be reopened after the high water level condition clears (by pushing reset button).
2. Will auto-open on receiving another low water level initiation signal.

ISOLATIONS AND SETPOINTS
TABLE 7

Isolation Signals:

1. Low steam line pressure: 128 psig

2. High steam line flow to turbine: +202" H_2O increasing or -100" H_2O decreasing (Unit 1 +218" H_2O, -100" H_2O of rated flow)

3. Turbine exhaust diaphragm high pressure: 10 psig

4. High temperature leak detection

   - HPCI Emergency Area Cooler Temp High: 165°F
   - (Unit 2 only) HPCI Pipe Penetration Room Temp High: 165°F
   - Suppression Pool Area Ambient Temp (15 min time delay): 165°F
   - Suppression Pool Area Diff Temp(15 min time delay): 36°F

5. Manual isolation (with an auto-initiation signal present)

Auto-Isolation Will Cause the Following to Occur:

1. Steam supply isolation valves (F002 and F003) close.

2. Pump suction valves from Torus (F041 and F042) close.

3. HPCI Turbine trips.

Manual-Isolation Will Cause the Following to Occur:

1. Steam supply isolation valve (F003) close.

2. Pump suction valves from Torus (F041) close.

3. HPCI Turbine trips.

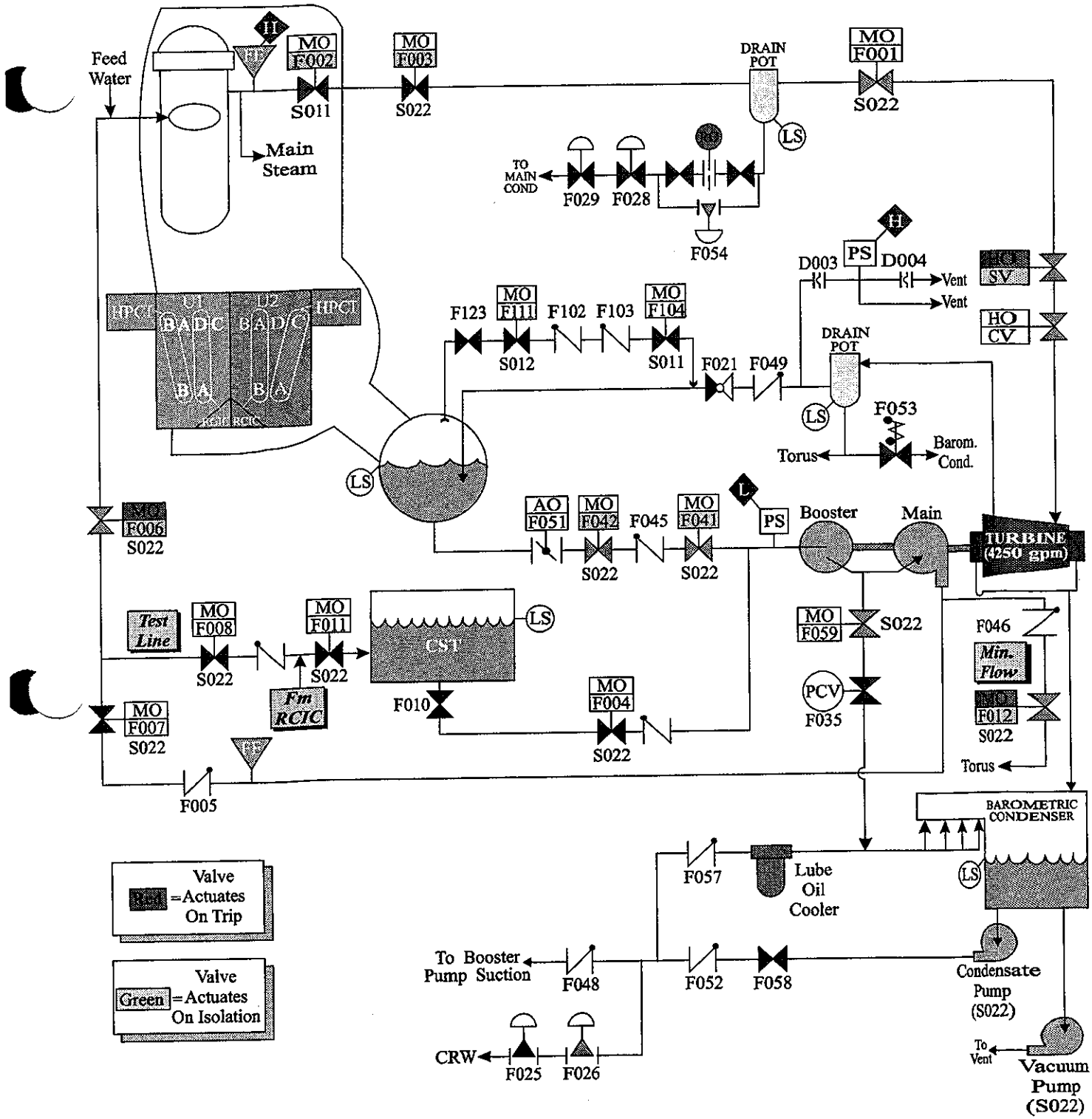

HPCI SYSTEM (SIMPLIFIED DIAGRAM)

LT-00501 Fig 1

17. 211000A3.04 001

Which ONE of the following contains a correct list of indications that are used to verify the Standby Liquid Control System is operating properly once the system has been initiated? (Not necessarily all the indications)

A. Squib valve loss of continuity alarm annunciated, storage tank level decreasing, discharge pressure slightly lower than reactor pressure.

B. Red light indicating pump is running, reactor water level will increase, neutron level in the reactor will increase.

C. Storage tank level increasing, RWCU suction valve 2G31-F004 closes, squib valve amber light goes off.

D. System discharge pressure will increase to greater than reactor pressure, neutron level in the reactor will decrease, RWCU suction valve 2G31-F004 closes.

References: SI-LP-01101 Rev. SI-00, pg 21 of 32.
EO 011.002.1.03

A. Incorrect since discharge pressure should be higher than reactor pressure.

B. Incorrect since reactor water level increasing is not an indication that SBLC is injecting. Also, neutron level should be decreasing.

C. Incorrect since storage tank level should decrease.

D. Correct answer.

RO Tier:	T2G1	SRO Tier:	T2G1
Keyword:	SBLC	Cog Level:	MEM 4.3/4.4
Source:	N	Exam:	HT02301
Test:	C	Misc:	TCK

QUESTIONS REPORT
for HT2002

1. 211000A3.04 001

SELECT the list of indications that are used to verify the Standby Liquid Control System is operating properly once the system has been initiated. (Not necessarily all the indications)

A. Squib valve loss of continuity alarm annunciated, storage tank level decreasing, discharge pressure slightly lower than reactor pressure.

B. Red light indicating pump is running, reactor water level will increase, neutron level in the reactor will decrease.

C. SBLC pump amps in normal band, RWCU suction valve 2G31-F004 closes, squib valve amber light goes off.

D. System discharge pressure will increase to greater than reactor pressure, neutron level in the reactor will decrease, RWCU suction valve 2G31-F004 closes.

References: SI-LP-01101 Rev. SI-00, pg 21 of 32.
EO 011.002.1.03

A. Incorrect since discharge pressure should be higher than reactor pressure.

B. Incorrect since reactor water level increasing is not an indication that SBLC is injecting.

C. Incorrect since there isn't indication for pump amps.

D. Correct answer.

1. Turn the Control Room keylock switch to either the "Start Sys A" or the "Start Sys B" position. The selected pump will start, both squib valves will fire, and the Reactor Water Cleanup System is isolated by its outboard isolation suction valve closing. (If the selected pump does not start, the keylock switch is turned to the other position in order to start the other pump).

2. The indicators used to verify the system is operating properly are:

   a. Red light indicating pump is running.

   b. Squib valve loss of continuity alarm annunciated.

   c. Squib valve amber lights goes off, indicating the valves have fired.

   d. System discharge pressure will increase to greater than reactor pressure.

   e. Storage tank level will decrease.

   f. Neutron level in the reactor will decrease.

   g. RWCU suction valve, 2G31-F004, closes as indicated on panel P601 in the Control Room.

NOTE: Discharge pressure, tank level, and neutron level are used to confirm that the SBLC system is injecting into the Reactor Core. Due to the large volume of the SBLC tank and the low flowrate of the SBLC pump, the tank level will not immediately show a decreasing level. It will take from 30 to 70 minutes to inject the entire contents of the tank.

I. Explosive Valves

1. A small trickle current of 4 milliamps (mA) is passed through the squib valve firing circuit to verify circuit continuity. This current is so small that as it passes through the primer bridge wires an insufficient amount of heat to cause firing is generated, but we can monitor this current flow to verify continuity.

2. When we verify the continuity of the firing circuit we are really verifying that the electrical firing circuit is intact.

OBJECTIVES

TERMINAL OBJECTIVES

1. **VERIFY** that the Standby Liquid Control System is in the Standby Mode of Operation per 34SO-C41-003-2/1S "Standby Liquid Control System." (011.001.a)

2. **INJECT** into the RPV with SBLC per 34SO-C41-003-2/1S "Standby Liquid Control System." (011.002.a)

ENABLING OBJECTIVES

1. Given a P&ID or a simplified diagram of the Standby Liquid Control System, **TRACE** the flow path through the system for injection into the RPV. (011.001.a.01)

2. Given a P&ID or a simplified diagram of the SBLC system, **IDENTIFY** the following components. (011.001.a.02)

   a. SBLC storage tank
   b. SBLC pumps
   c. SBLC squib valves
   d. Valves F001, F003A/B and F008
   e. SBLC Test Tank

3. Given a P&ID or a simplified diagram of the SBLC system **LOCATE** the following system interfaces. (011.001.a.03)

   a. Demin Water system
   b. Service Air systems

4. Given plant conditions, **DETERMINE** how the SBLC system will respond to a loss of Instrument/Service air. (011.002.A.05)

5. Given a Plant Hatch load list, **DETERMINE** the power supplies for the following SBLC system components: (011.001.a.04)

   a. SBLC pumps
   b. SBLC squib valves

6. Given a list of SBLC system equipment and components, **IDENTIFY** those which have local controls. (011.002.a.02)

7. **STATE** the two interlocks associated with the SBLC pumps and RWCU outboard isolation valve. (011.002.A.04)

8. **STATE** the three positive indications that SBLC is injecting into the Reactor Core. (011.002.a.03)

3. 211000A4.01 001

Unit 1 is in an ATWS condition and the Shift Supervisor is directing actions per RCA RPV Control (ATWS). He has determined that Boron injection is required. The CBO initiates Boron injection per *34SO-C41-003-2S,Standby Liquid Control System*. The initial tank level indicates 86%. Two minutes later the CBO notices that the SBLC Tank level indication has failed downscale.

Which ONE of the following could be the cause of this and how will the CBO ensure that the Cold Shutdown Boron Weight has been injected?

A. Instrument air has been lost to the level detector and an Operator should be sent to verify level in the tank via the local level indication.

B. Instrument air has been lost to the level detector and an Operator should be sent to verify level in the tank via the top hatch.

C. Too much instrument air is being supplied to the bubbler detector and an Operator should adjust the flow to approximately 1 scfh.

D. Too much instrument air is being supplied to the bubbler detector and an Operator should adjust the flow to approximately 10 scfh.

Reference: RCA RPV Control (ATWS) flow chart
SI-LP-01101-00 Rev. SI-00, Standby Liquid Control
EO 011.001.a.03

A. Incorrect due to local level indication is also lost on a loss of instrument air. The level indication fails downscale on a loss of instrument air.

B. Correct answer.

C. Incorrect since too much flow to the bubbler causes level indication to be high.

D. Incorrect since too much flow to the bubbler causes level indication to be high.

RO Tier:	T2G1	SRO Tier:	T2G1
Keyword:	SBLC	Cog Level:	C/A 3.9/3.9
Source:	N	Exam:	HT02301
Test:	C	Misc:	TCK

18. 211000A4.01 001

Unit 1 is in an ATWS condition and the Shift Supervisor is directing actions per RCA RPV Control (ATWS). He has determined that Boron injection is required. The CBO initiates Boron injection per *34SO-C41-003-2S,Standby Liquid Control System.* The initial tank level indicates 86%. Two minutes later the CBO notices that he has lost indication for the SBLC Tank level.

Which ONE of the following could be the cause of this and how will the CBO ensure that the Cold Shutdown Boron Weight has been injected?

A. Instrument air has been lost to the level detector and an Operator should be sent to verify level in the tank via the local level indication.

B.✓ Instrument air has been lost to the level detector and an Operator should be sent to verify level in the tank via the top hatch.

C. Too much instrument air is being supplied to the bubbler detector and an Operator should adjust the flow to approximately 1 scfh.

D. Too much instrument air is being supplied to the bubbler detector and an Operator should adjust the flow to approximately 10 scfh.

Reference: RCA RPV Control (ATWS) flow chart
SI-LP-01101-00 Rev. SI-00, Standby Liquid Control
EO 011.001.a.03

A. Incorrect due to local level indication is also lost on a loss of instrument air. The level indication fails downscale on a loss of instrument air.

B. Correct answer.

C. Incorrect since too much flow to the bubbler causes level indication to be high.

D. Incorrect since too much flow to the bubbler causes level indication to be high.

RO Tier:	T2G1	SRO Tier:	T2G1
Keyword:	SBLC	Cog Level:	C/A 3.9/3.9
Source:	N	Exam:	HT02301
Test:	C	Misc:	TCK

7. 211000A4.01 001

Unit 1 is in an ATWS condition and the Shift Supervisor is directing actions per RCA RPV Control (ATWS). He has determined that Boron injection is required. The CBO initiates Boron injection per 34SO-C41-003-2S. The initial tank level indicates 86%. Two minutes later the CBO notices that he has lost indication for the SBLC Tank level. What could be the cause of this and how will the CBO ensure that the Cold Shutdown Boron Weight has been injected?

A. Instrument air has been lost to the level detector and an Operator should be sent to verify level in the tank via the local level indication.

B. Instrument air has been lost to the level detector and an Operator should be sent to verify level in the tank via the top hatch.

C. Too much instrument air is being supplied to the bubbler detector and an Operator should adjust the flow to approximately 1 scfh.

D. Too much instrument air is being supplied to the bubbler detector and an Operator should adjust the flow to approximately 10 scfh.

Reference: RCA RPV Control (ATWS) flow chart
SI-LP-01101-00 Rev. SI-00, Standby Liquid Control
EO 011.001.a.03

A. Incorrect due to local level indication is also lost on a loss of instrument air. The level indication fails downscale on a loss of instrument air.

B. Correct answer.

C. Incorrect since too much flow to the bubbler causes level indication to be high.

D. Incorrect since too much flow to the bubbler causes level indication to be high.

OBJECTIVES

TERMINAL OBJECTIVES

1. **VERIFY** that the Standby Liquid Control System is in the Standby Mode of Operation per 34SO-C41-003-2/1S "Standby Liquid Control System." (011.001.a)

2. **INJECT** into the RPV with SBLC per 34SO-C41-003-2/1S "Standby Liquid Control System." (011.002.a)

ENABLING OBJECTIVES

1. Given a P&ID or a simplified diagram of the Standby Liquid Control System, **TRACE** the flow path through the system for injection into the RPV. (011.001.a.01)

2. Given a P&ID or a simplified diagram of the SBLC system, **IDENTIFY** the following components. (011.001.a.02)

   a. SBLC storage tank
   b. SBLC pumps
   c. SBLC squib valves
   d. Valves F001, F003A/B and F008
   e. SBLC Test Tank

3. Given a P&ID or a simplified diagram of the SBLC system **LOCATE** the following system interfaces. (011.001.a.03)

   a. Demin Water system
   b. Service Air systems

4. Given plant conditions, **DETERMINE** how the SBLC system will respond to a loss of Instrument/Service air. (011.002.A.05)

5. Given a Plant Hatch load list, **DETERMINE** the power supplies for the following SBLC system components: (011.001.a.04)

   a. SBLC pumps
   b. SBLC squib valves

6. Given a list of SBLC system equipment and components, **IDENTIFY** those which have local controls. (011.002.a.02)

7. **STATE** the two interlocks associated with the SBLC pumps and RWCU outboard isolation valve. (011.002.A.04)

8. **STATE** the three positive indications that SBLC is injecting into the Reactor Core. (011.002.a.03)

IV. System Interfaces

A. The Standby Liquid Control System injects into the Reactor Pressure Vessel.

B. The SBLC storage tank is filled from the Demin Water System. The Demin Water System also supplies water for filling and flushing the SBLC system.

C. The Service Air System supplies the SBLC storage tank air spargers to provide solution mixing during chemical addition and concentration analysis.

- Loss of Service Air could result in stratification and sodium pentaborate coming out of solution if it was being used for mixing at the time of loss.

D. Instrument Air supplies the bubbler level detector for tank level indication in the Control Room and locally. The air bubbler level detector is used to minimize a possible false level due to sodium pentaborate precipitating out and causing a malfunction of the level detection system. About one (1) SCFH is the air flow rate.

- Loss of Instrument Air would cause a loss of tank level indication in the Main Control Room, thereby preventing the determination of HOT SHUTDOWN BORON WEIGHT. The local level indicator would also be lost. The only way to determine level would be to open the hatch on top of the tank and visually check the level.

E. The SBLC pumps are powered from 2R24-S011 (R24-S011) and 2R24-S012 (R24-S012) respectively. (The same breakers that supply power to the squib valves.)

F. The explosive valves are powered from 2R24-S011 (R24-S011) for F004A and 2R24-S012 (R24-S012) for F004B (the same breaker as the associated pump).

- If power is available to both 2R24-S011 and 2R24-S012, starting <u>either</u> pump A or B will fire <u>both</u> F004A and B.

G. The "Squib Valves Ready" amber lights and position indication (red/green) lights for F008 receive power from 2R25-S101 (R25-S125), which are supplied from R24-S011 for the respective unit.

1. For the "Squib Valves Ready" light to be illuminated, both primers in the squib valve must have continuity across them.

2. Example: If the #1 primer in 2C41-F004A did not have continuity and the #2 primer did, the F004A amber continuity light would be extinguished.

PLANT E. I. HATCH | UNIT 1

RCA RPV CONTROL (ATWS)

31EO-EOP-011-1S | REV. 6 | ATTACHMENT 1

BWROG EPG/SAG REV. 1

RCA RPV CONTROL (ATWS)

A condition which requires reactor scram and reactor power CANNOT be determined

Reactor pressure above 1080 psig

Drywell pressure above 1.85 psig

WHILE PERFORMING THE FOLLOWING

IF PRIMARY CONTAINMENT FLOODING IS OR HAS BEEN REQUIRED — THEN exit the EOPs and enter the Severe Accident Guidelines → Go to SAGs

Perform RC-1, RC-2, RC-3

WHILE PERFORMING THE FOLLOWING

IF ALL control rods are inserted to or beyond position 02 OR control rods are inserted to a cold shutdown rod configuration — THEN teminate boron injection AND perform RPV Control (Non-ATWS) → GO TO RC point A → Go to 34AB-C71-001-1S

PERFORM CONCURRENTLY

RC/L

B

1 2

Confirm automatic actions:
- ISOLATION per 34AB-C71-001-1S
- ECCS
- EMERGENCY DIESEL GENERATOR

GO TO CP-3 point K

GO TO CP-1 point G

GO TO CP-2 point J

NOTE 1
CS shutoff head = 280 psig
LPCI shutoff head = 220 psig

OWING
orm Emergency Depress
orm RPV Flooding
vent injection from CS and LPCI
ps per 31EO-EOP-114-1S
CEPT when required for
quate c

ef setpoint
960 psig
le 1

OWING
aintain reactor pressure below
limit, irrespective of the resulting
oldown rate.
aintain reactor pressure below
limit, irrespective of the resulting
oldown rate.
en MSIVs to re-establish main
ndenser as a heat sink per
EO-EOP-111-1S

3 4 5

1080 psig
. If desired
:
ssure to
any
ontrol

off line
re below,
s valves

OLLOWING
rform the following:

t (Table 3)

RC/Q

WHILE PERFORMING THE FOLLOWING

IF reactor is shutdown (subcritical with IRMs below range 6) AND NO boron has been injected into RPV — THEN perform scram procedure → GO TO 34AB-C71-001-1S AND 34AB-C11-005-1S

Confirm reactor mode switch in SHUTDOWN

Confirm ARI initiation

Confirm recirc flow runback to minimum

IF reactor power is above 5% OR CANNOT be determined — THEN trip recirc pumps

PERFORM CONCURRENTLY

- WAIT UNTIL reactor power oscillations exceed 25% peak to peak
- BEFORE Torus water temperature reaches BIIT curve limit (Graph 5)
- Reset ARI and insert control rods per 31EO-EOP-103-1S

BORON INJECTION IS REQUIRED

Initiate SBLC per 34SO-C41-003-1S

Inhibit ADS

Evaluate override on CP-3 Chart at coordinate C-2

IF boron CANNOT be injected with SBLC — THEN Inject boron using one or more of the following per 31EO-EOP-109-1S:
- CRD
- HPCI
- RCIC

WHILE PERFORMING THE FOLLOWING

IF SBLC tank level drops to 8% — THEN trip the SBLC pumps

IF RWCU is NOT isolated — THEN bypass RWCU filter/demineralizers per 34SO-G31-003-1S

WAIT UNTIL Cold Shutdown Boron Weight (Table 3) has been injected

Go to 34AB-C71-001-1S

4. 212000K4.06 001

After a scram signal is received on Unit 2, control rods fail to insert and a manual scram is inserted. The white RPS scram group lights are **ILLUMINATED**.

Which ONE of the following describes the state of the scram solenoids and the **NEXT** action that should be taken?

A. Energized; Rods should be individually scrammed.

B. De-energized; Rods should be manually driven in.

C. Energized; RPS test switches should be taken to trip.

D. De-energized; Links for RPS solenoids should be opened.

References: 31EO-EOP-103-2S Rev4Ed2 pg 2

A. Incorrect, the scram solenoids are energized, but the next action to be taken is to place the RPS test switches to trip IAW 31-EO-EOP-103-2S.

B. Incorrect, the scram solenoids are not de-energized, however, this action can be taken concurrently IAW 31-EO-EOP-103-2S.

C. Correct, the scram solenoids are energized, and the next action to be taken is to place the RPS test switches to trip IAW 31-EO-EOP-103-2S.

D. Incorrect, the scram solenoids are not de-energized, and the next action to be taken is to place the RPS test switches to trip IAW 31-EO-EOP-103-2S.

RO Tier:	T2G1	SRO Tier:	T2G1
Keyword:	ROD SELECT	Cog Level:	C/A 3.0/3.0
Source:	B	Exam:	HT02301
Test:	C	Misc:	TCK

3.0 OPERATOR ACTIONS

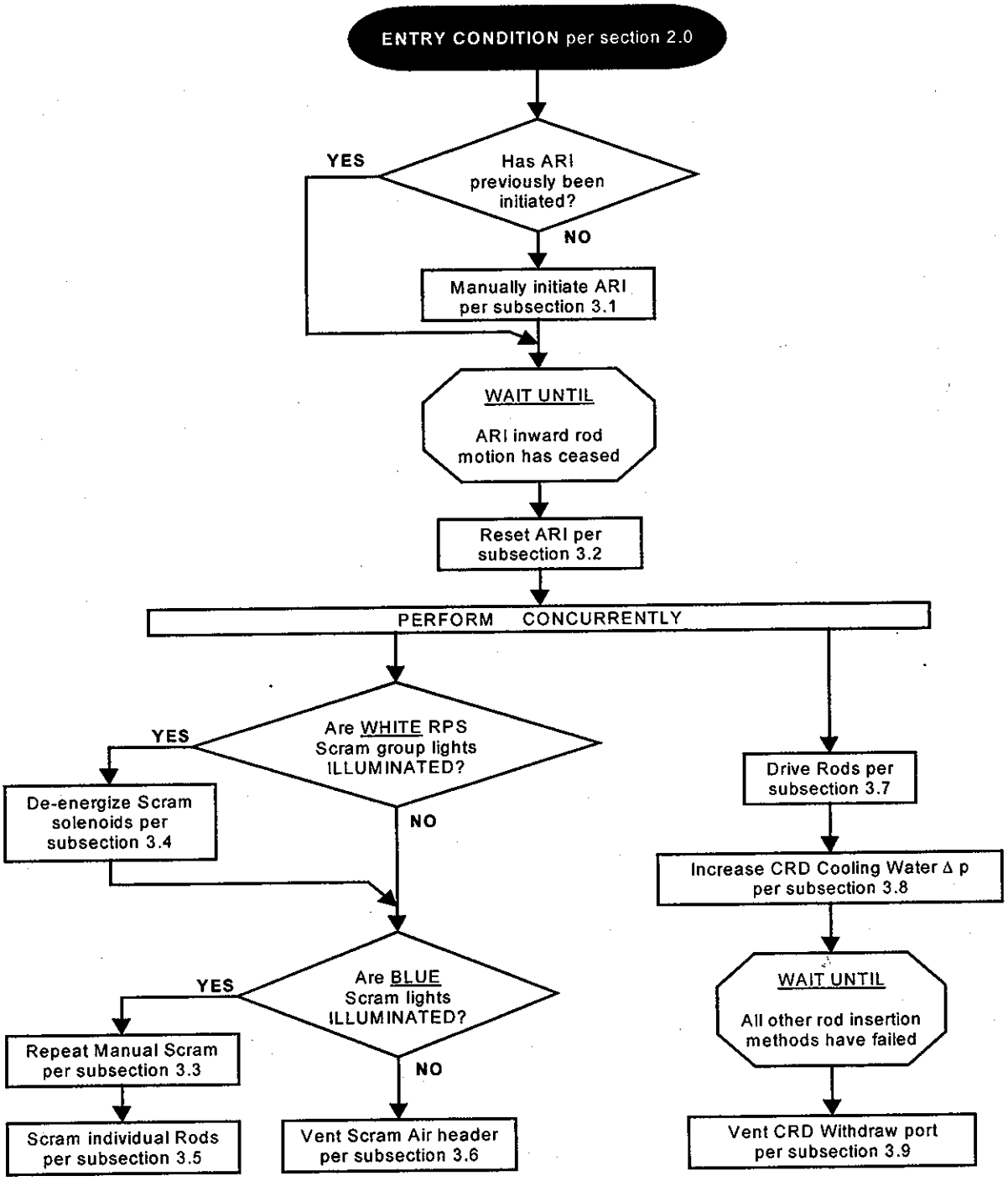

20. 212000K4.06 001

Which ONE of the following describes one reason why the Mode Switch is taken from the "Shutdown" position to the "Refuel" position during an ATWS condition?

A. Allows any control rod to be selected for insertion.

B. Allows control rod insertion free from RWM insert blocks.

C. Allows accurate OD-7 information to be obtainable from the plant process computer.

D. Allows the scram relays to be re-energized after automatic scrams have been overridden.

References: UFSAR Section 7.7.
I can't show it in the references but I believe that with the Mode Switch in Shutdown you can't select a control rod.

A. Correct answer.

RO Tier:	T2G1	SRO Tier:	T2G1
Keyword:	ROD SELECT	Cog Level:	MEM 3.0/3.0
Source:	B	Exam:	HT02301
Test:	C	Misc:	TCK

QUESTIONS REPORT
for HT2002

1. 212000K4.06 001

Select the statement below which describes one reason why the Mode Switch is taken from the "Shutdown" position to the "Refuel" position during an ATWS condition.

A. Allows any control rod to be selected for insertion.

B. Allows control rod insertion free from RWM insert blocks.

C. Allows accurate OD-7 information to be obtainable from the plant process computer.

D. Allows the scram relays to be re-energized after automatic scrams have been overridden.

References: UFSAR Section 7.7.
I can't show it in the references but I believe that with the Mode Switch in Shutdown you can't select a control rod.

A. Correct answer.

A. With the mode switch in SHUTDOWN, no control rod can be withdrawn. This enforces compliance with the intent of the Shutdown mode.

B. The circuitry is arranged to initiate a rod block regardless of the position of the mode switch for the following conditions:

1. Any APRM upscale rod block alarm. The purpose of this rod block function is to avoid conditions that would require RPS action if allowed to proceed. The APRM upscale rod block alarm setting is selected to initiate a rod block before the APRM high neutron flux scram setting is reached.

2. Any APRM inoperative alarm. This assures that no control rod is withdrawn unless the average power range neutron monitoring channels are either in service or properly bypassed.

3. Either RBM upscale alarm. This function is provided to stop the erroneous withdrawal of a single worst-case control rod so that violation of the fuel integrity safety limit does not result. Although local fuel damage poses no significant threat in terms of radioactive material released from the nuclear system, the alarm setting is selected so that no violation of the fuel integrity safety limit results from a single control rod withdrawal error during power range operation.

4. Either RBM inoperative alarm. This assures that no control rod is withdrawn unless the RBM channels are in service or properly bypassed.

5. Scram discharge volume high-water level. This assures that no control rod is withdrawn unless enough capacity is available in the scram discharge volume to accommodate a scram. The setting is selected to initiate a rod block well in advance of that level which produces a scram.

6. Scram discharge volume high-level scram trip bypassed. This assures that no control rod is withdrawn while the scram discharge volume high-water level scram function is out of service.

7. The RWM initiates a rod insert and withdraw block. The purpose of this function is to reinforce procedural controls that limit there activity worth of control rods under low-power conditions. The rod block trip settings are based on the allowable control rod worth limits established for the design basis rod drop accident. Adherence to prescribed control rod patterns is the normal method by which this reactivity restriction is observed. Additional information on the RWM function is available in section 7.10.

8. Rod position information system malfunction. This assures that no control rod can be withdrawn unless the rod position information system is in service.

9. Rod movement timer switch malfunction during withdrawal. This assures that no control rod can be withdrawn unless the timer is within specifications.

C. With the mode switch in RUN, the following conditions initiate a rod block:

1. Any APRM downscale alarm. This assures that no control rod is withdrawn during power range operation unless the average power range neutron monitoring channels are operating properly or are correctly bypassed. All unbypassed APRMs must be onscale during reactor operation in the RUN mode.

2. Either RBM downscale alarm. This assures that no control rod is withdrawn during power range operation unless the RBM channels are operating properly or are correctly bypassed. Unbypassed RBM must be onscale during reactor operations in the RUN mode.

D. With the mode switch in STARTUP or REFUEL, the following conditions initiate a rod block:

1. Any SRM detector not fully inserted into the core when the SRM count level is below the retract permit level and any IRM range switch on either of the two lowest ranges. This assures that no control rod is withdrawn unless all SRM detectors are properly inserted when they must be relied upon to provide the operator with neutron flux level information.

2. Any ARM upscale level alarm. This assures that no control rod is withdrawn unless the SRM detectors are properly retracted during a reactor startup. The rod block setting is selected at the upper end of the range over which the SRM is designed to detect and measure neutron flux.

3. Any SRM downscale alarm. This assures that no control rod is withdrawn unless the SRM count rate is above the minimum prescribed for low neutron flux level monitoring.

4. Any SRM inoperative alarm. This assures that no control rod is withdrawn during low neutron flux level operations unless proper neutron monitoring capability is available in that all ARM channels are in service or properly bypassed.

5. Any IRM detector not fully inserted into the core. This assures that no control rod is withdrawn during low neutron flux level operations unless proper neutron monitoring capability is available in that all IRM detectors are properly located.

6. Any IRM upscale alarm. This assures that no control rod is withdrawn unless the intermediate range neutron monitoring equipment is properly upranged during a reactor startup. This rod block also provides a means to stop rod

withdrawal in time to avoid conditions requiring RPS action (scram) in the event that a rod withdrawal error is made during low neutron flux level operations.

7. Any IRM downscale alarm except when range switch is on the lowest range. This assures that no control rod is withdrawn during low neutron flux level operations unless the neutron flux is being properly monitored. This rod block prevents the continuation of a reactor startup if the operator up-ranges the IRM too far for the existing flux level; thus, the rod block ensures that the IRM is onscale if control rods are to be withdrawn.

8. Any IRM inoperative alarm. This assures that no control rod is withdrawn during low neutron flux level operations unless proper neutron monitoring capability is available in that all IRM channels are in service or properly bypassed.

E. Refer to paragraph 7.7.1.2 for rod block bypasses.

The RMCS is an operational system used for regulating power level and power distribution. This system is self-monitoring with the automatic rod blocks, operator annunciators, and operating status lights (such as the rod position indicators) as part of the system design. The rod blocks are an internal subsystem of this nonsafety system and as such are designed to be single-failure proof but are not designed to stringent safety standards.

The RMCS receives rod block signals from the NMS to prevent improper rod motion which could result in reactor scram. Common LPRM, IRM, and SRM detectors are used, but the signal is physically and electrically isolated before use in the RMCS. This isolation is achieved through two separate relay trip units which prevent any feedback from the RMCS to the RPS.

The performance of the RMCS is monitored by the RPS. If a variable (for example, neutron flux) which is controlled by the RMCS exceeds specific limits, the RPS takes independent action to cause reactor shutdown.

The safety analysis in chapter 15 shows that failures in the RMCS, such as continuous withdrawal of a control rod, do not result in any fuel damage. No fuel damage results from any single operator error or single equipment malfunction.

Conformance to General Design Criterion 24

No part of the RMCS is required for scram. The rod block functions provided by the NMS are the only instances where the RMCS uses any instruments or devices used by the RPS. The rod block signals received from the NMS prevent improper rod motion before limits causing reactor scram are reached. Common LPRM, IRM, and SRM detectors are used, but physically and electrically separate trip units provide signals for the RMCS and RPS.

21. 214000K4.01 001

Which ONE of the following explains why a "ROD DRIFT" alarm is received after moving a control rod using the "EMERGENCY IN" switch?

A. "EMERGENCY IN" bypasses the Rod Position Indication System.

B. The sequence timer is bypassed causing an insert and withdraw signal at the same time.

C. The rod is at an even reed switch and none of the selected relay busses are energized (insert, withdraw or settle).

D. The rod is at an odd reed switch and none of the selected relay busses are energized (insert, withdraw or settle).

References: SI-LP-05401-00 Rev. SI-00, pg 7 & 8 of 26, Reactor Manual Control
EO 001.010.a.12, 001.026.a.02

A. Incorrect since this switch does not bypass RPIS.

B. Incorrect since this does not cause an insert and withdraw signal at the same time.

C. Incorrect since being at an even reed switch position ensures a rod drift alarm does not occur.

D. Correct answer since this alarm is actuated when rod is at an odd position and relay buses are not energized.

RO Tier:	T2G2	SRO Tier:	T2G2
Keyword:	REED SWITCH	Cog Level:	MEM 3.0/3.1
Source:	B	Exam:	HT02301
Test:	C	Misc:	TCK

QUESTIONS REPORT
for HT2002

1. 214000K4.01 001

Select the statement that explains why a "ROD DRIFT" alarm is received after moving a control rod using the "EMERGENCY IN" switch:

A. "EMERGENCY IN" bypasses the Rod Position Indication System.

B. The sequence timer is bypassed causing an insert and withdraw signal at the same time.

C. The rod is at an even reed switch and none of the selected relay busses are energized (insert, withdraw or settle).

D. The rod is at an odd reed switch and none of the selected relay busses are energized (insert, withdraw or settle).

References: SI-LP-05401-00 Rev. SI-00, pg 7 & 8 of 26, Reactor Manual Control
EO 001.010.a.12, 001.026.a.02

A. Incorrect since this switch does not bypass RPIS.

B. Incorrect since this does not cause an insert and withdraw signal at the same time.

C. Incorrect since being at an even reed switch position ensures a rod drift alarm does not occur.

D. Correct answer since this alarm is actuated when rod is at an odd position and relay buses are not energized.

5. The switch must be moved before or simultaneously with, the rod movement control switch. An amber light above the Rod Out Notch Override Switch illuminates during a notch override action.

6. The "EMERGENCY IN" position bypasses all the interlocks to insert the rod **except the Rod Worth Minimizer insert blocks.** It directly energizes the directional control valves by bypassing the timer. There is no settle function, water is forced past the seals in the CRD while settling into a notch.

   Note: Select block prevents any rod from being selected, and therefore would also prevent use of EMERGENCY IN.

C. Rod Select Power Switch

1. The switch has two positions:

   a. "ON"

   b. "OFF"

2. It furnishes power to the select matrix. The switch provides the only method of manually de-selecting all the rods.

D. Rod Drift Alarm Test Switch

1. This switch allows for testing of the rod drift alarm circuitry. It has three positions:

   a. "TEST"

   b. "OFF"

   c. "RESET"

2. The switch spring returns to "OFF".

3. Switch operation:

a. When a control rod movement is at any other reed switch other than an even reed switch position, a rod drift alarm occurs unless the rod drift is bypassed for that control rod.

Drift alarm senses power to the insert, withdraw and settle buses. The alarm is bypassed when any of the three are energized for that rod. A rod drifting while other normal rod movement is being conducted will still initiate a "ROD DRIFT" alarm.

NOTE: The rod drift alarm is bypassed for a control rod when that rod is being moved by Control Rod Hydraulics. This is a function performed by the reactor manual control system timer.

NOTE: A rod drift annunciator will alarm if a Non-Moving control rods present position even reed switch fails. This has happened at Plant Hatch.

b. When a drift alarm does occur, the test switch allows the alarm to be reset when the control rod is at an "even" notch position and the test switch is turned to the "RESET" position.

c. To test the rod drift alarm, the test switch is turned to the "TEST" position while a control rod is being moved with normal CRD hydraulic operations. By placing the switch in "TEST", the operator "bypasses the bypass" which allows the rod drift alarm to be received when the rod leaves the even numbered reed switch position.

E. Timer Malfunction Select Block Switch

1. The purpose of this switch is to test the operation of the auxiliary timer and select block functions.

Note: A select block is an interlock which de-energizes the select power to the select matrix, thus de-energizing the selected rod and preventing any further selection of rods until the block has been cleared.

2. The switch has the following three positions:

a. "TEST"

b. "OFF"

OBJECTIVES

TERMINAL OBJECTIVES

001.010.a Given plant conditions requiring control rod movement, MOVE control rods using single notch per 34GO-OPS-065-0S "Control Rod Movement."

001.026.a. Given plant conditions requiring rapid power reduction, INSERT rods using "Emergency In" per 34GO-OPS-065-0S "Control Rod Movement."

ENABLING OBJECTIVES

1. STATE the two purposes of the Reactor Manual Control System. (001.010.a.01)

2. Given a simplified drawing of RMC system, TRACE the signal flowpath for the following: (001.010.a.04)

   a. Insert (rod in notch)

   b. Withdraw (rod out notch)

3. From a list, SELECT the statement that describes the function/operation of the following: (001.010.a.11)

   a. Rod Movement Control Switch

   b. Rod Out Notch Override Switch

   c. Rod Select Power Switch

   d. Rod Drift Alarm Test Switch

   e. Timer Malfunction Select Block Switch

4. Given a list of plant conditions, DETERMINE those conditions which prevent "Emergency In" rod movement. (001.026.A.01)

5. From a list, SELECT the statement that describes the performance of a Rod Drift Alarm Test. (001.010.A.12)

6. Given a list of functions, DETERMINE the function of the following RMC components. (001.010.a.03)

   a. Rod Sequence Timer (Automatic Sequence Timer)

   b. Rod Sequence Backup Timer (Auxiliary Timer)

7. STATE the reasons for receiving a "Rod Drift" annunciator at the completion of "Emergency In" rod movement. (001.026.a.02)

8. Given a Control Rod Sequence Timer diagram, DESCRIBE how a control rod is moved either in or out. (001.010.A.02)

9. DESCRIBE the consequences of a failure of the rod sequence timer on the following: (001.010.a.06)

   a. Rod notch in

   b. Rod notch out

2. 215005A2.03 001

Unit 2 is starting up with the Reactor Mode Switch in the START/HOT STBY position. The following is the present status of each APRM with regard to LPRM inputs and indicated power level.

	APRM			
	A	B	C	D
Level D LPRM Inputs	6	5	6	7
Level C LPRM Inputs	5	3	8	8
Level B LPRM Inputs	6	6	5	2
Level A LPRM Inputs	5	3	6	6
Indicated Power Level	12%	14%	12%	11%

Which ONE of the following describes the plant response to these conditions and the cause for the response?

A. Half Scram due to High power on APRM "B".

B. Full Scram due to High power on APRM's "A", "B" and "C".

C. APRM UPSC TRIP/INOP SYS B Alarm due to APRM "B" having too few LPRM Inputs.

D. APRM UPSC TRIP/INOP SYS B Alarm due to APRM "D" having too few LPRM Inputs.

References: SI-LP-01203-00 Rev. SI-00 pg 8-9 of 51
EO 012.003.d.01

A. Incorrect since Full Scram would occur if power reached 13% with Mode Switch in START/HOT STBY.

B. Incorrect since power level is too low for scram condition. (13% with Mode Switch in START/HOT STBY)

C. Incorrect since APRM B has the minimum LPRM Inputs required (17).

D. Correct answer.

RO Tier:	T2G1	SRO Tier:	T2G1
Keyword:	APRM	Cog Level:	MEM 3.6/3.8
Source:	N	Exam:	HT02301
Test:	C	Misc:	TCK

26. 215005A2.03 001

While operating at 100% power, a 1/2 scram on RPS Channel A is received. The operator notes the following:

APRM UPSC TRIP/INOP SYS A alarm sealed in
NEUTRON MON SYS TRIP alarm sealed in
APRM C Upscale/Inop trip light illuminated on P603
APRM C Inop trip light illuminated on P608

Which ONE of the following could be the cause of the APRM C failure?

A. 7 LPRM inputs have been placed to Bypass.

B. 11 LPRM inputs are in Operate, one of those inputs has failed downscale.

C. 4 LPRM inputs have failed downscale.

D. Only 1 input from a LPRM level B detector is in Operate.

References: SI-LP-01203-00 Rev. SI-00 pg 8-9 of 51
EO 012.003.d.01

A. Correct answer.

B. Incorrect since this would cause the APRM to read lower and possibly cause an APRM downscale rod block.

C. Incorrect since this would cause the APRM to read lower and possibly cause an APRM downscale rod block.

D. Incorrect since the APRM does not process a signal from the LPRM that deals with what levels are generating the signal.

RO Tier:	T2G1	SRO Tier:	T2G1
Keyword:	APRM	Cog Level:	MEM 3.6/3.8
Source:	B	Exam:	HT02301
Test:	C	Misc:	TCK

10. 215005A2.03 001

While operating at 100% power, a 1/2 scram on RPS Channel A is received. The operator notes the following:

APRM UPSC TRIP/INOP SYS A alarm sealed in
NEUTRON MON SYS TRIP alarm sealed in
APRM C Upscale/Inop trip light illuminated on P603
APRM C Inop trip light illuminated on P608

Which one of the following could be the cause of the APRM C failure?

A. 7 LPRM inputs have been placed to Bypass.

B. 11 LPRM inputs are in Operate, one of those inputs has failed downscale.

C. 4 LPRM inputs have failed downscale.

D. Only 1 input from a LPRM level B detector is in Operate.

References: SI-LP-01203-00 Rev. SI-00 pg 8-9 of 51
EO 012.003.d.01

A. Correct answer.

B. Incorrect since this would cause the APRM to read lower and possibly cause an APRM downscale rod block.

C. Incorrect since this would cause the APRM to read lower and possibly cause an APRM downscale rod block.

D. Incorrect since the APRM does not process a signal from the LPRM that deals with what levels are generating the signal.

e. Trips and Alarms

Table 4

In the APRM instrument, the Average Neutron Flux value is compared to one of two fixed upscale trip setpoint values and to a fixed downscale trip setpoint value. The active upscale trip setpoint is a high value if the Reactor Mode Switch is in the "Run" position and it is lowered if the Reactor Mode Switch is in any other position. The STP value is compared to the two flow-biased setpoints. Faults detected by self-test either cause an alarm as an alert to the operator, or a control rod withdrawal block, or a safety trip signal (INOP), or a combination of these actions depending on the nature of the fault. An alarm is generated if either the total quantity of operative (non-bypassed) LPRM detector values is less than 17 or the quantity of operative LPRM detector values from a particular level is less than 3.

f. Setpoints

APRM Run Mode setpoints (Mode Switch in Run)

Reactor SCRAM

- Neutron Flux High Trip 117.0%

- STP High Trip (Flow-biased)
  $0.58W + 55.0\% - 0.58\Delta W$ (clamped at 113.5%)

W = Recirc Drive flow in percent of rated.
ΔW = the maximum measured difference between two loop and single loop drive flow for the same core flow in percentage of rated recirculation flow for single loop operation. The value is zero for two loop operation.

- Inop Trip (instrument mode switch not in operate, critical self test fault, loss of power)

Rod Out Block

- STP High Alarm (Flow-biased) $0.63W + 43.0\% - 0.63\Delta W$ (clamped at 110.0%)

- Neutron Flux Downscale 5.0%

27. 216000K2.01 001

Which ONE of the following describes the results of a loss of the 2B RPS bus to the Analog Transmitter Trip System (ATTS)?

A. A complete loss of power to panels P921 and P923.

B. A loss of one of the two power supplies to panels P921 and P923.

C. A loss of one of the two power supplies to panels P922 and P924.

D. A complete loss of power to panels P922 and P924.

Reference: LT-LP-10008 Rev. SI-00 pg 7 of 28.
EO 055.001.a.07

A. Incorrect since a loss of 2B RPS does not affect panels P921 and P923.

B. Incorrect since a loss of 2B RPS does not affect panel P921 or P923.

C. Incorrect since a loss of 2B RPS affects both panels P922 and P924.

D. Correct answer.

RO Tier:	T2G1	SRO Tier:	T2G1
Keyword:	ANALOG TRIP	Cog Level:	MEM 2.8/2.8
Source:	B	Exam:	HT02301
Test:	C	Misc:	TCK

QUESTIONS REPORT
for HT2002

1. 216000K2.01 001

A loss of 2B RPS bus to the ATTS WOULD result in:

A. A complete loss of power to panels P921 and P923.

B. A loss of one of the two power supplies to panels P921 and P923.

C. A loss of one of the two power supplies to panels P922 and P924.

D. A complete loss of power to panels P922 and P924.

Reference: LT-LP-10008 Rev. SI-00 pg 7 of 28.
EO 055.001.a.07

A. Incorrect since a loss of 2B RPS does not affect panels P921 and P923.

B. Incorrect since a loss of 2B RPS does not affect panel P921 or P923.

C. Incorrect since a loss of 2B RPS affects both panels P922 and P924.

D. Correct answer.

TERMINAL OBJECTIVES

055.001.A Given plant conditions, MONITOR the ATTS to DETERMINE proper operation of the ATTS system.

ENABLING OBJECTIVES

1. Given a list of statements, DETERMINE which is the purpose of the Analog Transmitter Trip System. (ATTS) (055.001.a.17)

2. Given a simplified diagram of an ATTS circuit, TRACE the signal flowpath from detector to trip unit. (055.001.a.18)

3. Given a list of systems, IDENTIFY which systems interface with ATTS. (055. 001.a.03)

4. Given a list, IDENTIFY the power sources required for the operation of the Analog Transmitter Trip System. (055.001.a.05)

5. Given a list of statements, SELECT the statement representing the function of the following components. (055.001.a.19)

   a. Master Trip Unit (MTU)

   b. Slave Trip Unit (STU)

   c. Differential Voltage Trip Units

   d. Trip Relays

6. IDENTIFY the condition indicating the loss of an ATTS panel power supply. (055.001.a.07)

7. IDENTIFY the ATTS condition indicating when the low-low set trip test channel is activated. (055.001.a.08)

8. IDENTIFY the ATTS condition indicating when a low-low set channel is armed. (055.001.a.09)

9. IDENTIFY the condition indicating an ATTS trip unit is in trip status. (055.001.a.10)

10. IDENTIFY the function of the status LED on front of the Master Trip Units (MTU) and the Slave Trip Units (STU). (055.001.a.26)

11. IDENTIFY the condition indicating an ATTS trip unit is INOP. (055.001.a.11)

12. IDENTIFY the ATTS condition indicating a trip unit GROSS FAILURE TRIP has occurred. (055.001.a.12)

b. The ATTS power supplies can accept either 120 VAC or 125 VDC input power. The power supplies in the RPS division panels are connected to the 120 VAC RPS source, while the power supplies in the ECCS division panels receive their power from the 125 VDC station batteries.

c. The ATTS power supplies produce 24 VDC output power which is supplied to the ATTS transmitters, the master trip units, the slave trip units, the calibration unit, and the trip relays.

4. Power Distribution to the ATTS panels.

a. RPS Bus A supplies 120 VAC power to ATTS panels P921 and P923.

b. RPB Bus B supplies 120 VAC power to ATTS panels P922 and P924.

c. 125 VDC Bus A supplies power to ATTS panels P925 and P927 from panel 2R25-S129 (1R25-S105 for Unit 1).

d. 125 VDC Bus B supplies power to ATTS panels P926 and P928 from panels 2R25-S002 and 2R25-S130 (1R25-S106 for Unit 1).

- One power supply in both ATTS panels P926 and P928 receives its power from 2R25-S002 and the other power supply in each ATTS panel receives its power from 2R25-S130.

5. ATTS status lights are provided on each ATTS panel to indicate the condition of the 3 card files and the 2 power supplies in that panel.

a. 120/208 VAC Essential Cabinet A (R25-S036) supplies power to the status lights on ATTS panels P921, P923, P925, and P927.

b. 120/208 VAC Essential Cabinet B (R25-S037) supplies power to the status lights on ATTS panels P922, P924, P926, and P928.

6. The ATTS panels for both units are located on the west side of the control room.

E. Master Trip Unit (MTU)

Fig 02

1. The master trip unit contains the circuitry necessary to supply power to its associated local transmitter, receive the analog current input signal from the transmitter, convert it to an analog voltage signal, and supply that output signal to various applications.

28. 217000K1.01 001

Unit 2 is operating at 80% RTP. The RCIC system is in standby with a suction from the CST. The quarterly HPCI flow rate test is in progress and is taking longer than expected. Torus level has reached 151" and preparations are being made to pump the torus down to normal level within the 2 hour Tech Spec time limit.

Which ONE of the following describes the effect high Torus level had on RCIC?

A. No effect since the RCIC suction valves do not transfer until 152".

B. The Torus suction valves (F029 & F031) received an open signal and once both valves were full open then the CST suction valve (F010) received a closed signal.

C. The Torus suction valves (F029 & F031) received an open signal at the same time the CST suction valve (F010) received a closed signal.

D. The CST suction valve (F010) received a closed signal and when it was full closed then the Torus suction valves (F029 & F031) received an open signal.

References: SI-LP-03901 Rev. SI-00 pg 10 of 37

A. Incorrect since the U2 RCIC suction swap takes place at a suppression pool level of 150.5" Unit 1 takes place at 152".

B. Correct answer.

C. Incorrect since the CST and Torus suction valves do not get a signal to change position at the same time. The CST gets a closed signal "After" the Torus suction valves are full open.

D. Incorrect since the Torus suction valves come open before the CST suction valve goes closed.

RO Tier:	T2G1	SRO Tier:	T2G1
Keyword:	RCIC	Cog Level:	C/A 3.5/3.5
Source:	N	Exam:	HT02301
Test:	C	Misc:	TCK

12. 217000K1.01 001

Unit 2 is operating at 80% RTP. The RCIC system is in standby with a suction from the CST. The quarterly HPCI flow rate test is in progress and is taking longer than expected. Torus level has reached 151" and preparations are being made to pump the torus down to normal level within the 2 hour Tech Spec time limit. What effect has the high Torus level had on RCIC?

A. No effect since the RCIC suction valves do not transfer until 152".

B. The Torus suction valves (F029 & F031) received an open signal and once both valves were full open then the CST suction valve (F010) received a closed signal.

C. The Torus suction valves (F029 & F031) received an open signal at the same time the CST suction valve (F010) received a closed signal which minimizes the time that the CST and Torus suctions are open at the same time.

D. The CST suction valve (F010) received a closed signal and when it was full closed then the Torus suction valves (F029 & F031) received an open signal. This is to prevent draining the CST to the Torus.

References: SI-LP-03901 Rev. SI-00 pg 10 of 37

A. Incorrect since the U2 RCIC suction swap takes place at a suppression pool level of 150.5" Unit 1 takes place at 152".

B. Correct answer.

C. Incorrect since the CST and Torus suction valves do not get a signal to change position at the same time. The CST gets a closed signal "After" the Torus suction valves are full open.

D. Incorrect since the Torus suction valves come open before the CST suction valve goes closed.

2. RCIC Suppression Pool Suction Isolation Valves (F029 and F031) isolate the suppression pool from the RCIC system. They also provide an automatic transfer of the RCIC pump suction source from the CST to the suppression pool on a low CST level or a high suppression pool level.

   F029 and F031 will automatically open when
   U2 CST <11.5" or SP level >150.5"
   (U1 CST <11" or SP level >152").

3. Turbine Cooling Water Supply Valve (F046) supplies water from the RCIC pump discharge to the lube oil cooler and the Barometric Condenser for cooling. F046 auto opens on RCIC system initiation, & auto closes on Hi RWL > 51.7" (51.5" Unit 1).

4. The Barometric Condenser Condensate Pump removes condensate from the Barometric Condenser and discharges to the RCIC pump suction or Clean Radwaste (CRW). The pump auto cycles between Barometric Condenser high and low levels.

5. Barometric Condenser Condensate Pump discharge to CRW (valves F004 and F005) maintains Barometric condenser level when RCIC is shutdown by allowing a flowpath to CRW. F004 and F005 automatically close when F045 is full open.

6. RCIC Barometric Condenser Vacuum pump removes non-condensable from the Barometric Condenser and discharges them to the torus. It will automatically start on RCIC system initiation.

7. The Turbine Oil System supplies lubricating oil to turbine bearings and supplies control oil to the governor valve. Pressure is supplied by a shaft-driven oil pump and is maintained at approx 60#. During turbine startup the Governor valve is full open until the shaft-driven oil pump supplies oil pressure to close the Governor valve and maintain speed. The lube oil is cooled by the RCIC Lube Oil Cooler with cooling water supplied by the discharge of the RCIC pump.

8. The RCIC Minimum Flow Bypass Valve (F019) automatically opens to provide a flowpath of water to ensure adequate pump cooling during low flow operations.

   a. U2 - Auto opens when flow is < 55 gpm & pressure is > 128 #. Auto closes when, flow is
      > 122.5 gpm, F045 is shut, or the TTV is shut.

QUESTIONS REPORT
for Revision5HT2002

1. 219000A2.08 001

Unit 1 is operating at 100% RTP. The Plant Operator (PO) has placed the 1B RHR pump in Torus Cooling Mode. "Rx Bldg Floor Drains Sump B Leak High" alarm is received followed shortly by "RHR Pump B Trip." A System Operator (SO) in the area notifies the PO that there is excessive leakage in the pump seal area for the 1B RHR pump.

Which ONE of the following describes the impact on the RHR System and what are the appropriate actions to take per the Alarm Response procedures?
(Provide copy of Tech Spec Section 3.5.1)

A. Declare Division 2 of RHR INOPERABLE, send an Operator to the SWGR to look for flags and place the "B" RHR Pump control switch in STOP.

B. Declare the "B" RHR Pump INOPERABLE, verify the suction valve lineup, isolate Division 2 of RHR and reset the sump timers.

C. Declare Division 2 of RHR INOPERABLE, verify the suction valve lineup, isolate the "B" RHR Pump and reset the sump timers.

D. Declare the "B" RHR Pump INOPERABLE, send an Operator to the SWGR to look for flags and isolate Division 2 of RHR.

References: 34AR-601-206-1S Rev. 3.1
34AR-602-401-1S Rev. 0.1

A. Incorrect since you need to isolate the pump.

B. Incorrect since you need to call the entire loop INOPERABLE, not just the pump.

C. Correct answer.

D. Incorrect since you do not have to isolate the entire Loop of RHR, just the pump. Also, you should declare the entire loop Inoperable.

RO Tier:	T2G2	SRO Tier:	T2G2
Keyword:	RHR	Cog Level:	C/A 2.8/3.1
Source:	N	Exam:	HT02301
Test:	C	Misc:	TCK

5. 219000A2.08 001

Unit 1 is operating at 100% RTP. The Plant Operator (PO) has placed the 1B RHR pump in Torus Cooling Mode. "Rx Bldg Floor Drains Sump B Leak High" alarm is received followed shortly by "RHR Pump B Trip." A System Operator (SO) in the area notifies the PO that there is excessive leakage in the pump seal area for the 1B RHR pump.

Which ONE of the following describes the impact on the RHR System and what are the appropriate actions to take per the Alarm Response procedures?

A. Declare Division 2 of RHR INOPERABLE, send an Operator to the SWGR to look for flags and place the "B" RHR Pump control switch in STOP.

B. Declare the "B" RHR Pump INOPERABLE, verify the suction valve lineup, isolate Division 2 of RHR and reset the sump timers.

C. Declare Division 2 of RHR INOPERABLE, verify the suction valve lineup, isolate the "B" RHR Pump and reset the sump timers.

D. Declare the "B" RHR Pump INOPERABLE, send an Operator to the SWGR to look for flags and isolate Division 2 of RHR.

References: 34AR-601-206-1S Rev. 3.1
34AR-602-401-1S Rev. 0.1

Want reference 3.5.1 only.

A. Incorrect since you need to isolate the pump.

B. Incorrect since you need to call the entire loop INOPERABLE, not just the pump.

C. Correct answer.

D. Incorrect since you do not have to isolate the entire Loop of RHR, just the pump. Also, you should declare the entire loop Inoperable.

RO Tier:	T2G2	SRO Tier:	T2G2
Keyword:	RHR	Cog Level:	C/A 2.8/3.1
Source:	N	Exam:	HT02301
Test:	C	Misc:	TCK

4. 219000A2.08 001

Unit 1 is operating at 100% RTP. The Plant Operator (PO) has placed the 1B RHR pump in Torus Cooling Mode. "Rx Bldg Floor Drains Sump B Leak High" alarm is received followed shortly by "RHR Pump B Trip." A System Operator (SO) in the area notifies the PO that there is excessive leakage in the pump seal area for the 1B RHR pump.

Which ONE of the following describes the impact on the RHR System and what are the appropriate actions to take per the Alarm Response procedures?

A. Declare Division 2 of RHR INOPERABLE, send an Operator to the SWGR to look for flags, isolate the "B" RHR Pump and reset the sump timers.

B. Declare Division 2 of RHR INOPERABLE, send an Operator to the SWGR to look for flags, isolate the "B" Loop of RHR and reset the sump timers.

C. Declare the "B" RHR Pump INOPERABLE, verify the suction valve lineup, isolate the "B" RHR Pump and reset the sump timers.

D. Declare the "B" RHR Pump INOPERABLE, send an Operator to the SWGR to look for flags, isolate Division 2 of RHR and reset the sump timers.

References: 34AR-601-206-1S Rev. 3.1
34AR-602-401-1S Rev. 0.1

A. Incorrect since you do not need to call the entire loop INOPERABLE, just the pump.

B. Incorrect since you do not need to call the entire loop INOPERABLE, just the pump.

C. Correct answer.

D. Incorrect since you do not have to isolate the entire Loop of RHR, just the pump.

RO Tier:	T2G2	SRO Tier:	T2G2
Keyword:	RHR	Cog Level:	C/A 2.3/3.5
Source:	N	Exam:	HT02301
Test:	C	Misc:	TCK

3. 219000A2.08 001

Unit 1 is operating at 100% RTP. The Plant Operator (PO) has placed the 1B RHR pump in Torus Cooling Mode. "Rx Bldg Floor Drains Sump B Leak High" alarm is received followed shortly by "RHR Pump B Trip." A System Operator (SO) in the area notifies the PO that there is excessive leakage in the pump seal area for the 1B RHR pump.

Which ONE of the following describes the impact on the RHR System and what are the appropriate actions to take per the Alarm Response procedures?

A. Declare the "B" Loop of RHR INOPERABLE, send an Operator to the SWGR to look for flags, isolate the "B" RHR Pump and reset the sump timers.

B. Declare the "B" Loop of RHR INOPERABLE, send an Operator to the SWGR to look for flags, isolate the "B" Loop of RHR and reset the sump timers.

C. Declare the "B" RHR Pump INOPERABLE, verify the suction valve lineup, isolate the "B" RHR Pump and reset the sump timers.

D. Declare the "B" RHR Pump INOPERABLE, send an Operator to the SWGR to look for flags, isolate the "B" Loop of RHR and reset the sump timers.

References: 34AR-601-206-1S Rev. 3.1
34AR-602-401-1S Rev. 0.1

A. Incorrect since you do not need to call the entire loop INOPERABLE, just the pump.

B. Incorrect since you do not need to call the entire loop INOPERABLE, just the pump.

C. Correct answer.

D. Incorrect since you do not have to isolate the entire Loop of RHR, just the pump.

RO Tier:	T2G2	SRO Tier:	T2G2
Keyword:	RHR	Cog Level:	C/A 2.3/3.5
Source:	N	Exam:	HT02301
Test:	C	Misc:	TCK

30. 219000A2.08 001

Unit 1 is operating at 100% RTP. The extra RO has placed Torus Cooling on the "B" Loop using the "B" RHR Pump in preparation for the Quarterly HPCI Flow Rate Test. Alarm "Rx Bldg Floor Drains Sump B Leak High" is received followed shortly by "RHR Pump B Trip." An Operator in the area notifies the extra RO that the pump seal area is leaking excessively.

Which ONE of the following describes the impact on the RHR System and what are the appropriate actions to take per the Alarm Response procedures?

A. Declare the "B" Loop of RHR INOPERABLE, send an Operator to the SWGR to look for flags, isolate the "B" RHR Pump and reset the sump timers.

B. Declare the "B" Loop of RHR INOPERABLE, send an Operator to the SWGR to look for flags, isolate the "B" Loop of RHR and reset the sump timers.

C. Declare the "B" RHR Pump INOPERABLE, verify the suction valve lineup, isolate the "B" RHR Pump and reset the sump timers.

D. Declare the "B" RHR Pump INOPERABLE, send an Operator to the SWGR to look for flags, isolate the "B" Loop of RHR and reset the sump timers.

References: 34AR-601-206-1S Rev. 3.1
34AR-602-401-1S Rev. 0.1

A. Incorrect since you do not need to call the entire loop INOPERABLE, just the pump.

B. Incorrect since you do not need to call the entire loop INOPERABLE, just the pump.

C. Correct answer.

D. Incorrect since you do not have to isolate the entire Loop of RHR, just the pump.

RO Tier:	T2G2	SRO Tier:	T2G2
Keyword:	RHR	Cog Level:	C/A 2.3/3.5
Source:	N	Exam:	HT02301
Test:	C	Misc:	TCK

QUESTIONS REPORT
for HT2002

1. 219000A2.08 001

Unit 1 is operating at 100% RTP. The extra RO has placed Torus Cooling on the "B" Loop using the "B" RHR Pump in preparation for the Quarterly HPCI Flow Rate Test. Alarm "Rx Bldg Floor Drains Sump B Leak High" is received followed shortly by "RHR Pump B Trip". An Operator in the area notifies the extra RO that the pump seal area is leaking badly. What is the impact on the RHR System and what are the appropriate actions to take per the Alarm Response procedures?

A. Declare the "B" Loop of RHR INOPERABLE, send an Operator to the SWGR to look for flags, isolate the "B" RHR Pump and reset the sump timers.

B. Declare the "B" Loop of RHR INOPERABLE, send an Operator to the SWGR to look for flags, isolate the "B" Loop of RHR and reset the sump timers.

C. Declare the "B" RHR Pump INOPERABLE, verify the suction valve lineup, isolate the "B" RHR Pump and reset the sump timers.

D. Declare the "B" RHR Pump INOPERABLE, send an Operator to the SWGR to look for flags, isolate the "B" Loop of RHR and reset the sump timers.

References: 34AR-601-206-1S Rev. 3.1
34AR-602-401-1S Rev. 0.1

A. Incorrect since you do not need to call the entire loop INOPERABLE, just the pump.

B. Incorrect since you do not need to call the entire loop INOPERABLE, just the pump.

C. Correct answer.

D. Incorrect since you do not have to isolate the entire Loop of RHR, just the pump.

1.0 IDENTIFICATION:

ALARM PANEL 602-4

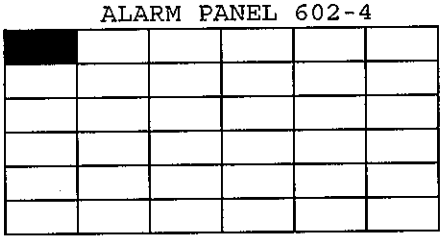

RX BLDG FLOOR

DRAINS SUMP A

LEAK HIGH

DEVICE:	SETPOINT:
1. 1G11-M602	1. TIMER 1G11-M602 timed out AND sump level is NOT Low.
2. 1G11-M603	2. TIMER 1G11-M603 NOT timed out AND sump level is High.

2.0 CONDITION:
The Rate of inleakage into the Reactor Building Floor Drain Sump exceeds 5.13 GPM for the M602 timer OR 4.9 GPM for the M603 timer.

3.0 CLASSIFICATION:
EQUIPMENT STATUS

4.0 LOCATION:
1H11-P602 Panel 602-4

5.0 OPERATOR ACTIONS:

5.1 IF coincident indication of a pipe rupture are present,

- High area temperatures
- High area differential temperatures
- Low reactor water level
- High building or area radiation
- High differential leak rate

THEN Enter 34AB-T22-001-1S Small Primary Coolant System Pipe Break - Reactor Building.

5.2 On Panel 1G11-P001, confirm a sump pump or pumps are running and the Floor Drain Collector Tank Level is increasing.

5.3 Check sump timers for proper setpoints. Refer to 34SO-G11-013-1S, Drywell and Reactor Building Sump System.

5.4 Locate AND isolate the source of high inleakage into the Reactor Building Floor Drain Sump.

5.5 RESET the sump timers. DEPRESS Rx Bldg Floor Drain Sump A Reset, 1G11-S402, at 1H11-P602.

6.0 CAUSES:

6.1 Excessive inleakage from the east side of the Reactor Building.
6.2 Incorrectly set Timers.

7.0 REFERENCES

7.1 H-16176, Radwaste P&ID Sheet 1
7.2 H-16018, Reactor Building Floor & Equipment Drainage Diagram
7.3 57CP-CAL-197-0 Sump Timer Calibration

8.0 TECH. SPEC./LCO:

N/A - Not applicable to this procedure.

APPROVAL:
DEPT. MGR PHW DATE 12-15-95

34AR-602-401-1S
Rev. 0 ED 1

1.0 IDENTIFICATION: ALARM PANEL 601-2

RHR PUMP B

TRIP

DEVICE: Relay 1E11-C002B-86

SETPOINT: Energized

2.0 CONDITION:
RHR Pump 1E11-C002B has tripped in AUTO after a manual start.

3.0 CLASSIFICATION:
EQUIPMENT STATUS

4.0 LOCATION:
1H11-P601 Panel 601-2

5.0 OPERATOR ACTIONS:

5.1 Confirm that the RHR Pump 1E11-C002B green indicator light is ILLUMINATED.

5.2 IF RHR Pump 1E11-C002B was in manual LPCI mode, confirm that the other 3 pumps are operating to maintain RPV level.

5.3 IF RHR Pump 1E11-C002B was in Shutdown Cooling mode, perform the following:

5.3.1 Confirm OR OPEN Shutdown Cooling Vlv, 1E11-F006D, and SDC Suction Vlvs 1E11-F009, and 1E11-F008.

5.3.2 CLOSE Shutdown Cooling Vlv, 1E11-F006B AND RHR Inbd Inj Vlv, 1E11-F015B.

5.3.3 START RHR Pump 1E11-C002D AND OPEN RHR Inbd Inj Vlv, 1E11-F015B.

5.4 IF RHR Pump 1E11-C002B was in Suppression Pool Cooling OR Torus Spray mode, perform the following:

5.4.1 CLOSE Torus Spray Vlv, 1E11-F027B AND Full Flow Test Line Vlv, 1E11-F024B.

5.4.2 Confirm OPEN Torus Suction Vlv, 1E11-F004B, AND OPEN Hx Bypass Vlv, 1E11-F048B.

5.4.3 FILL AND VENT Loop B per 34SO-E11-010-1S, Residual Heat Removal System.

5.4.4 CLOSE Hx Inlet Vlv, 1E11-F047B.

5.4.5 START RHR Pump 1E11-C002D.

5.4.6 OPEN 1E11-F024B to establish flow rate and IF torus spray is desired, OPEN 1E11-F027B.

5.4.7 OPEN Hx Inlet Valve, 1E11-F047B.

5.4.8 ADJUST 1E11-F068B to maintain more than 15 PSID as indicated on 1E11-R600B-1 Hx B Diff Press indicator.

5.4.9 IF necessary, THROTTLE Hx Bypass Vlv, 1E11-F048B, to obtain the desired cooling.

5.5 IF RHR Pump 1E11-C002B was in draining suppression pool to radwaste mode, perform the following:

5.5.1 CLOSE RHR To Radwaste Vlv, 1E11-F049.

5.5.2 FILL AND VENT Loop B discharge piping and commence draining Suppression Pool per 34SO-E11-010-1S, Residual Heat Removal System.

5.6 Investigate the RHR Pump 1E11-C002B trip by checking:

5.6.1 RHR Pump 1E11-C002B suction valve lineup for the mode of operation the pump was in.

5.6.2 At Frame 7 of 4160V Swgr 1G (1R22-S007) for flags for overcurrent and lockout condition.

6.0 CAUSES:

6.1 Improper suction valve lineup

6.2 Overcurrent lockout

6.3 Load shed

7.0 REFERENCES:

7.1 H-17760 thru H-17782, Residual Heat Removal System 1E11 Elementary Diagrams

8.0 TECH. SPEC./LCO:

8.1 TS 3.5.1 ECCS operating

8.2 TS 3.5.2 ECCS Shutdown

4. 223001A2.12 001

Unit 1 has scrammed on vessel low level due to loss of all High Pressure feed. The crew emergency depressurized the RPV before level reached -185". 1A Core Spray pump is operating to restore reactor water level with the following plant conditions:

Reactor Water Level	-120 inches and Increasing
Reactor Pressure	45 psig
Suppression Pool Temperature	190°F
Suppression Pool Water Level	145 inches
Suppression Chamber Pressure	3 psig
1A Core Spray Flow	4600 gpm

Which ONE of the following actions should the crew take concerning the continued use of 1A Core Spray pump?
(Provide Graph 9, 11A and 11B)

A. REDUCE flow to get back within Vortex limits.

B. CONTINUE flow at the present rate since it is within NPSH and Vortex limits.

C. REDUCE flow to get back within NPSH limits.

D. CONTINUE flow at the present rate ignoring NPSH and Vortex limits.

Reference: Core Spray Pump NPSH Limit Graph 11B
Core Spray Vortex Limit Graph 9
Students will be supplied with both graphs.

A. Incorrect since 1A Core Spray pump is within Vortex limits.

B. Incorrect since EOP's direct you bace to RC RPV CONTROL after vessel level is increasing above top of active fuel and now Vortex and NPSH limits are a concern.

C. Correct answer.

D. Incorrect since CP-1 has been exited to RC RPV CONTROL point B.

RO Tier:	T2G1	SRO Tier:	T2G1
Keyword:	CORE SPRAY	Cog Level:	C/A 3.7/3.8
Source:	B	Exam:	HT02301
Test:	C	Misc:	TCK

31. 223001A2.12 001

Unit 1 has scrammed on vessel low level due to loss of all High Pressure feed. The crew emergency depressurized the RPV when level reached TAF. 1A Core Spray pump is operating to restore reactor water level with the following plant conditions:

Reactor Water Level	-120 inches and Increasing
Reactor Pressure	45 psig
Suppression Pool Temperature	190°F
Suppression Pool Water Level	145 inches
Suppression Chamber Pressure	3 psig
1A Core Spray Flow	4600 gpm

Which ONE of the following actions should the crew take concerning the continued use of 1A Core Spray pump?
(Provide Graph 9, 11A and 11B)

A. REDUCE flow to get back within Vortex limits.

B. CONTINUE flow at the present rate since it is within NPSH and Vortex limits.

C. REDUCE flow to get back within NPSH limits.

D. CONTINUE flow at the present rate ignoring NPSH and Vortex limits.

Reference: Core Spray Pump NPSH Limit Graph 11B
Core Spray Vortex Limit Graph 9
Students will be supplied with both graphs.

A. Incorrect since 1A Core Spray pump is within Vortex limits.

B. Incorrect since EOP's direct you bace to RC RPV CONTROL after vessel level is increasing above top of active fuel and now Vortex and NPSH limits are a concern.

C. Correct answer.

D. Incorrect since CP-1 has been exited to RC RPV CONTROL point B.

RO Tier:	T2G1	SRO Tier:	T2G1
Keyword:	CORE SPRAY	Cog Level:	C/A 3.7/3.8
Source:	B	Exam:	HT02301
Test:	C	Misc:	TCK

QUESTIONS REPORT
for HT2002

1. 223001A2.12 001

Unit 1 has scrammed on vessel low level due to loss of all High Pressure feed. The crew emergency depressurized the RPV when level reached TAF. 1A Core Spray pump is operating to restore reactor water level with the following plant conditions:

Reactor Water Level	-120 inches and Increasing
Reactor Pressure	45 psig
Suppression Pool Temperature	190 F
Suppression Pool Water Level	145 inches
Suppression Chamber Pressure	3 psig
1A Core Spray Flow	4600 gpm

Concerning the continued use of 1A Core Spray pump, the crew should:

A. REDUCE flow to get back within Vortex limits.

B. CONTINUE flow at the present rate since it is within NPSH and Vortex limits.

C. REDUCE flow to get back within NPSH limits.

D. CONTINUE flow at the present rate ignoring NPSH and Vortex limits.

Reference: Core Spray Pump NPSH Limit Graph 11B

A. Incorrect since 1A Core Spray pump is within Vortex limits.

B. Incorrect since EOP's direct you bace to RC RPV CONTROL after vessel level is increasing above top of active fuel and now Vortex and NPSH limits are a concern.

C. Correct answer.

D. Incorrect since CP-1 has been exited to RC RPV CONTROL point B.

GRAPH 11B

UNIT 1

Core Spray Pump NPSH Limit

(Suppression Pool Water Level Below 146")

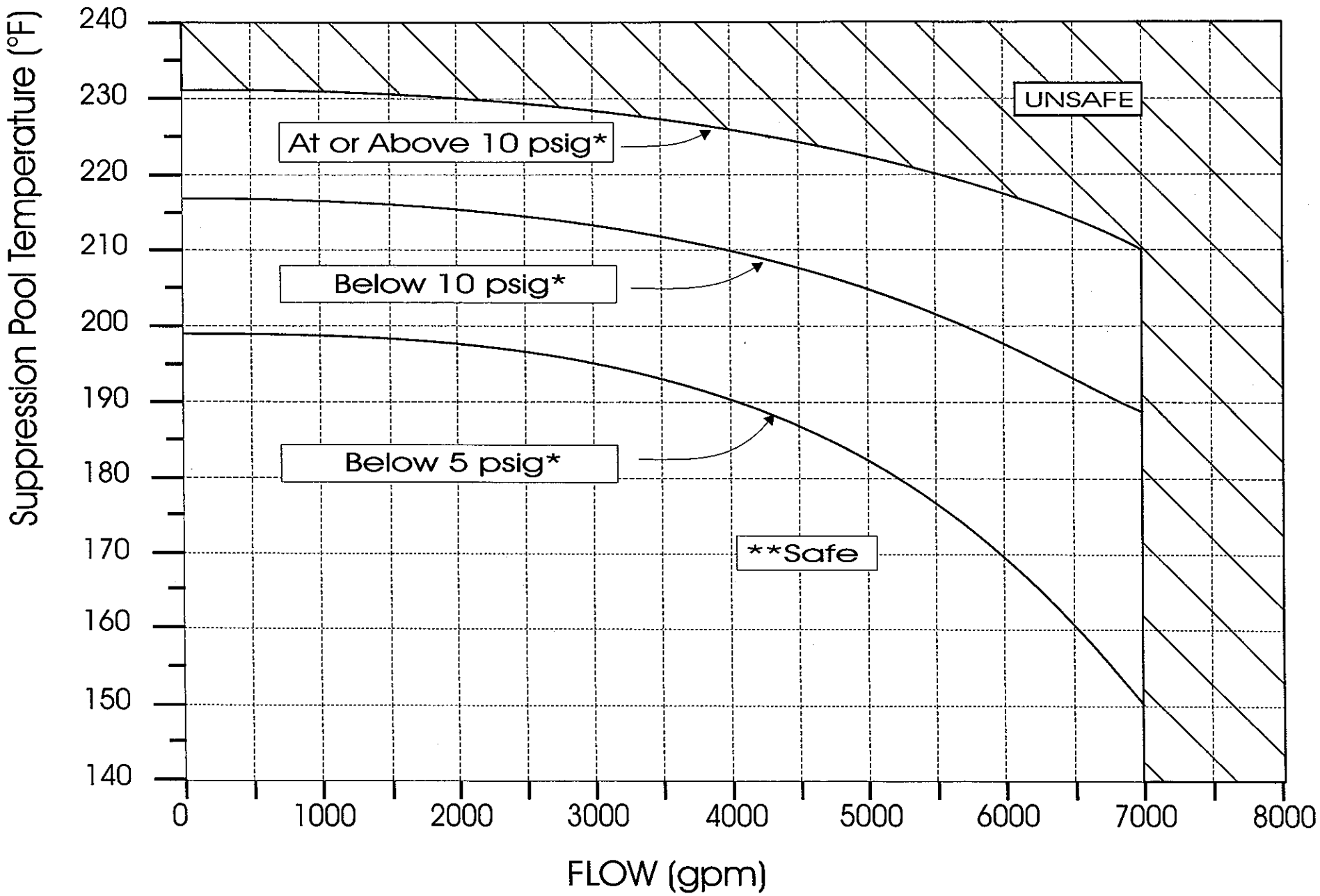

Note: May use SPDS Emergency Displays in place of this Graph.

* Suppression Chamber Pressure.

GRAPH 11B

UNIT 1

Core Spray Pump NPSH Limit

(Suppression Pool Water Level Below 146")

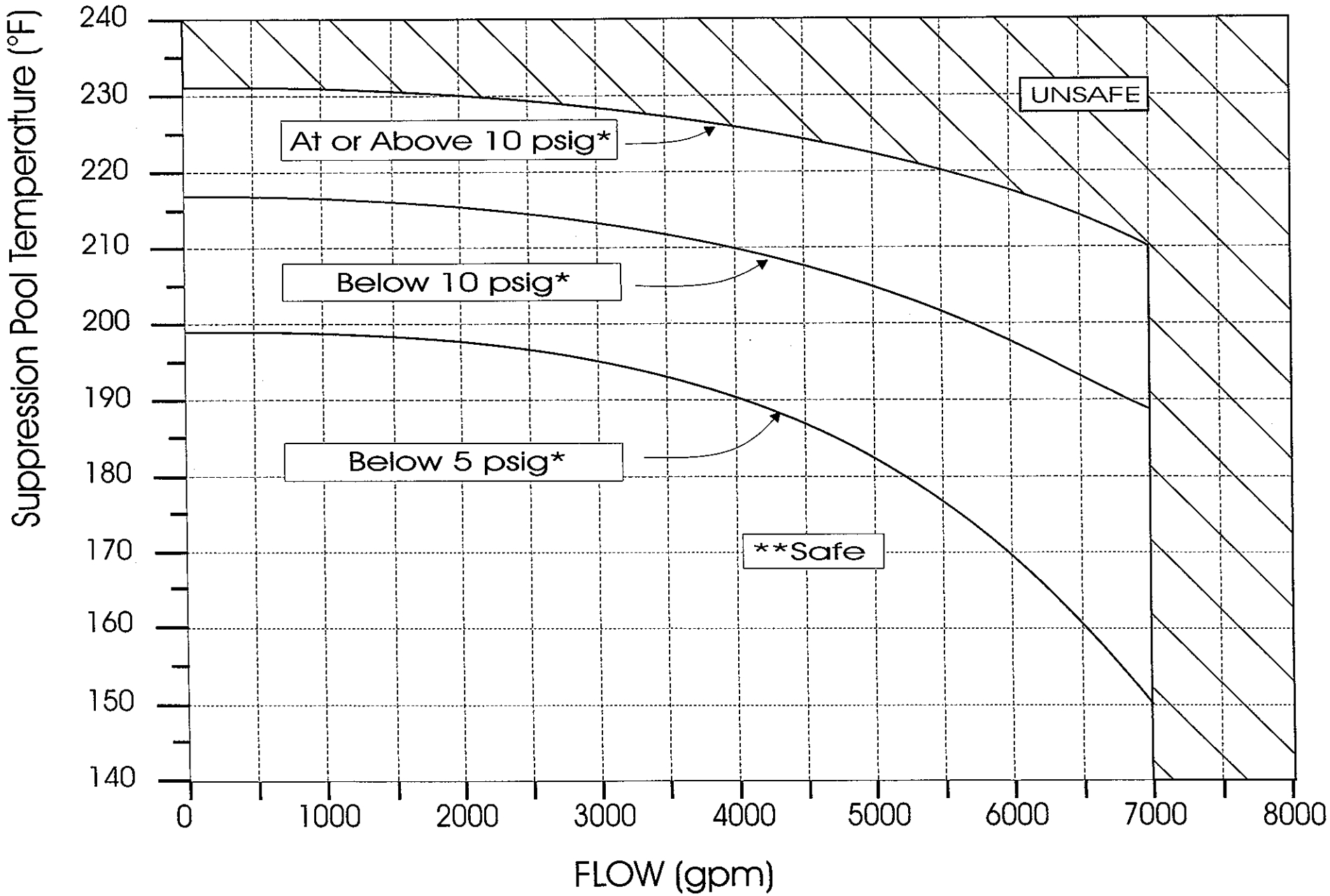

Note: May use SPDS Emergency Displays in place of this Graph.

* Suppression Chamber Pressure.

GRAPH 9

UNIT 1

CORE SPRAY VORTEX LIMIT

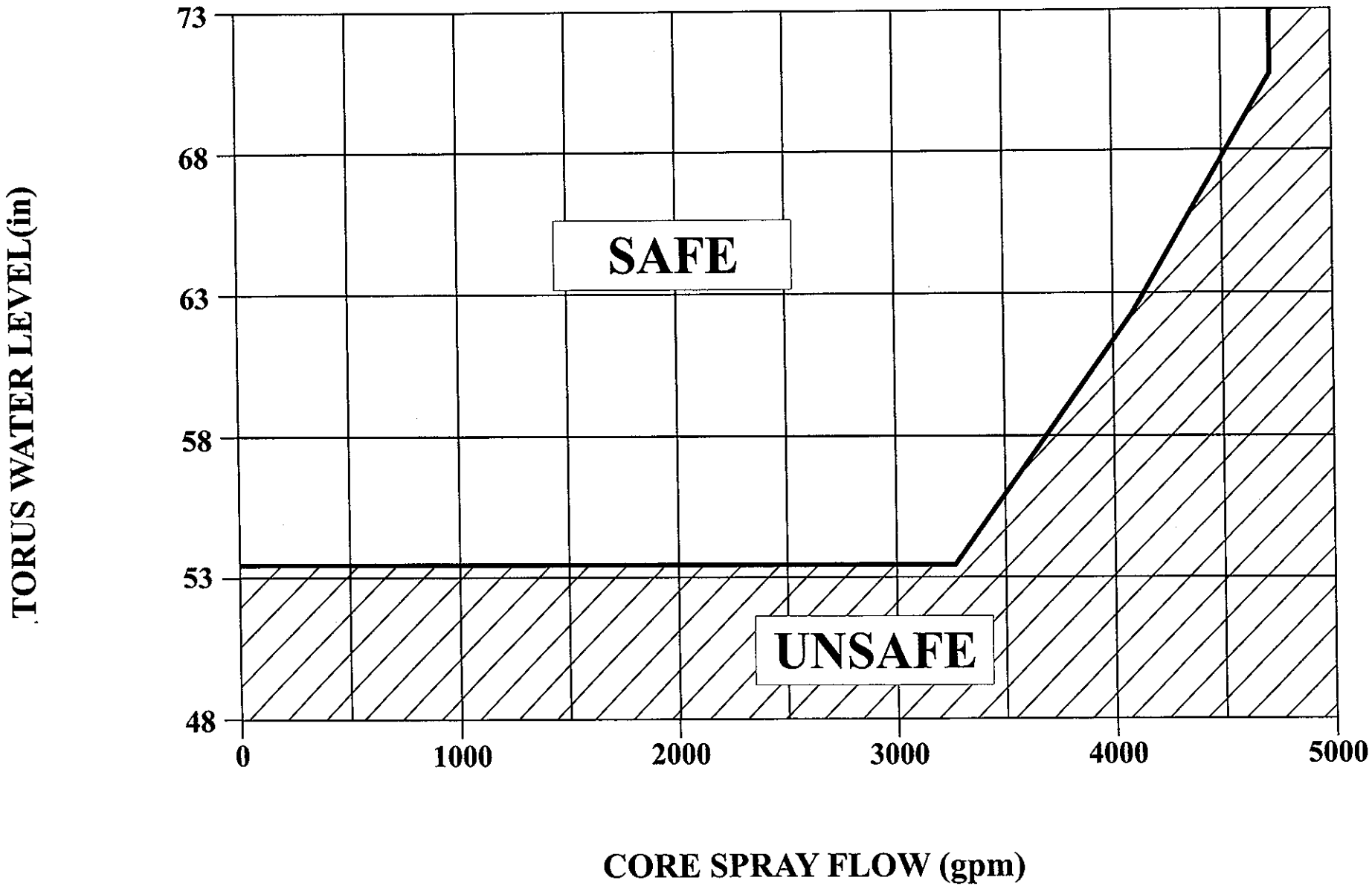

6. 223002K1.07 001

U-2 RCIC System is running with the following conditions present 10 minutes after the event:

Reactor Water Level	-38"
Drywell Pressure	+1.5 psig
Suppression Chamber Ambient Temp.	170°F
RCIC Steam Line pressure	900 psig
RCIC Emergency Area Cooler Temp	100°F and rising slowly

An operator has been sent to the RCIC room and reports that there is a small steam leak on the line upstream of the Trip and Throttle valve. The Shift Supervisor orders the Reactor Operator to manually isolate RCIC.

Which ONE of the following describes the effect on RCIC when the manual isolation pushbutton is depressed?

A. Isolation valves F007 and F008 close and the RCIC turbine trips.

B. Inboard Isolation valve F007 closes and the RCIC turbine trips.

C. Outboard Isolation valve F008 closes and the RCIC turbine trips.

D. No effect on RCIC since the system should already be isolated.

Reference: SI-LP-03901-00 Rev. SI-00 pg 17 of 37.
EO 039.012.a.04

A. Incorrect since only the F008 valve is affected by the "Manual Isolation" pushbutton while there is an initiation signal present.

B. Incorrect since the F007 valve is not affected by the "Manual Isolation" pushbutton while there is an initiation signal present.

C. Correct answer.

D. Incorrect since the only isolation signal could be Suppression Chamber Ambient Temp but it has a 30 minute time delay when temp is ≥ 165°F and this is 10 minutes into the event.

QUESTIONS REPORT
for Revision4HT2002

RO Tier:	T2G1	SRO Tier:	T2G1
Keyword:	RCIC	Cog Level:	C/A 3.4/3.6
Source:	N	Exam:	HT02301
Test:	C	Misc:	TCK

5. 223002K1.07 001

U-2 RCIC System is running with the following conditions present 10 minutes after the event:

Reactor Water Level	-38"
Drywell Pressure	+1.5#
Suppression Chamber Ambient Temp.	170°F
RCIC Steam Line pressure	900#
RCIC Emergency Area Cooler Temp	100°F and rising slowly

An operator has been sent to the RCIC room and reports that there is a small steam leak on the line upstream of the Trip and Throttle valve. The Shift Supervisor orders the Reactor Operator to manually isolate RCIC.

Which ONE of the following describes the effect on RCIC when the manual isolation pushbutton is depressed?

A. Isolation valves F007 and F008 close and the RCIC turbine trips.

B. Isolation valve F007 closes and the RCIC turbine trips.

C. Isolation valve F008 closes and the RCIC turbine trips.

D. No effect on RCIC since the system should already be isolated.

Reference: SI-LP-03901-00 Rev. SI-00 pg 17 of 37.
EO 039.012.a.04

A. Incorrect since only the F008 valve is affected by the "Manual Isolation" pushbutton while there is an initiation signal present.

B. Incorrect since the F007 valve is not affected by the "Manual Isolation" pushbutton while there is an initiation signal present.

C. Correct answer.

D. Incorrect since the only isolation signal could be Suppression Chamber Ambient Temp but it has a 30 minute time delay when temp is $\geq$ 165°F and this is 10 minutes into the event.

QUESTIONS REPORT
for Revision2 HT2002

RO Tier:	T2G1	SRO Tier:	T2G1
Keyword:	RCIC	Cog Level:	C/A 3.4/3.6
Source:	N	Exam:	HT02301
Test:	C	Misc:	TCK

32. 223002K1.07 001

U-2 RCIC System is running with the following conditions present 10 minutes after the event:

Reactor Water Level	-38"
Drywell Pressure	+1.5#
Suppression Chamber Ambient Temp.	170°F
RCIC Steam Line pressure	900#
RCIC Emergency Area Cooler Temp	100°F and rising slowly

An operator has been sent to the RCIC room and reports that there is a small steam leak on the line upstream of the Turbine Throttle valve. The Shift Supervisor orders the Reactor Operator to manually isolate RCIC.

Which ONE of the following describes the effect on RCIC when the manual isolation pushbutton is depressed?

A. Isolation valves F007 and F008 close and the RCIC turbine trips.

B. Isolation valve F007 closes and the RCIC turbine trips.

C. Isolation valve F008 closes and the RCIC turbine trips.

D. No effect on RCIC since the system should already be isolated.

Reference: SI-LP-03901-00 Rev. SI-00 pg 17 of 37.
EO 039.012.a.04

A. Incorrect since only the F008 valve is affected by the "Manual Isolation" pushbutton while there is an initiation signal present.

B. Incorrect since the F007 valve is not affected by the "Manual Isolation" pushbutton while there is an initiation signal present.

C. Correct answer.

D. Incorrect since the only isolation signal could be Suppression Chamber Ambient Temp but it has a 30 minute time delay when temp is $\geq$ 165°F and this is 10 minutes into the event.

QUESTIONS REPORT
for HT2002

RO Tier:	T2G1	SRO Tier:	T2G1
Keyword:	RCIC	Cog Level:	C/A 3.4/3.6
Source:	N	Exam:	HT02301
Test:	C	Misc:	TCK

15. 223002K1.07 001

U-2 RCIC System is running with the following conditions present 10 minutes after the event:

Reactor Water Level	-38"
Drywell Pressure	+1.5#
Suppression Chamber Ambient Temp.	170 F
RCIC Steam Line pressure	900#
RCIC Emergency Area Cooler Temp	100 F and rising slowly

An operator has been sent to the RCIC room and reports that there is a small steam leak on the line upstream of the Turbine Throttle valve. The Shift Supervisor orders the Reactor Operator to manually isolate RCIC. What is the effect on RCIC when the manual isolation pushbutton is depressed?

A. Isolation valves F007 and F008 close and the RCIC turbine trips.

B. Isolation valve F007 closes and the RCIC turbine trips.

C. Isolation valve F008 closes and the RCIC turbine trips.

D. No effect on RCIC since the system should already be isolated.

Reference: SI-LP-03901-00 Rev. SI-00 pg 17 of 37.
EO 039.012.a.04

A. Incorrect since only the F008 valve is affected by the "Manual Isolation" pushbutton while there is an initiation signal present.

B. Incorrect since the F007 valve is not affected by the "Manual Isolation" pushbutton while there is an initiation signal present.

C. Correct answer.

D. Incorrect since the only isolation signal could be Suppression Chamber Ambient Temp but it has a 30 minute time delay when temp is $\geq$ 165 F and this is 10 minutes into the event.

Note: All turbine trips, except the mechanical overspeed, can be reset from the Control Room. The mechanical overspeed trip can only be reset locally at the turbine trip and throttle valve. On a Turbine Trip the Trip and Throttle valve auto closes and when the Trip and Throttle valve is fully closed then the F013 and F019 go close.

Note: A high reactor vessel water level will cause the RCIC steam supply F045, and cooling water supply F046 will go close. If reactor vessel water level decreases to the low level setpoint (-35") then the system will automatically initiate.

2. Reactor vessel water level high, will close the RCIC steam supply F045, and cooling water supply F046.

C. RCIC Isolations

1. The RCIC system will automatically isolate upon receipt of any of the following signals:

   a. RCIC steam line high differential pressure, 143" $_{H}2O$ or -100" $_{H}2O$ (ITS: U2 @ 307% U1 @ 306%).

   b. RCIC steam line low pressure, 95#.

   c. Turbine exhaust diaphragm high pressure 10#.

   d. Steam Leak Detection System Temperatures:

      1) RCIC Emergency Area Cooler High Temp, $\leq$165°F.

      2) Suppression Chamber Ambient Temperature High, $\leq$165°F w/30 min. time delay.

      3) Suppression Chamber Delta Temperature High set at $\leq$ 36°F w/30 min. time delay.

   e. Manual - the pushbutton affects Logic "A" only and closes the F008. Manual isolation will only function when RCIC initiation signal is present.

   f. On a RCIC isolation the F007/F008 valves go close and RCIC turbine trips.

10. STATE which RCIC valves change position on RCIC while in Full Flow Test and an initiation signal is received. (039.004.A.02)

11. STATE which RCIC valves change position on RCIC while in Full Flow Test and a high suppression pool alarm is received. (039.011.A.01)

12. STATE the reasons why RCIC System operation below 2000 RPM is to be avoided. (039.003.A.01)

13. Given plant conditions, DETERMINE the RCIC Turbine Trips and setpoints. (039.013.A.01)

14. Given plant conditions, DETERMINE the RCIC System Isolation signals and their setpoints. (039.012.A.02)

15. Given plant conditions and a list of RCIC valves SELECT what RCIC valves close on a RCIC Turbine Trip and High Water Turbine Trip. (039.013.A.03)

16. Given a list of valves SELECT which valves change position on RCIC upon receiving a system initiation signal while in standby mode. (039.004.A.05)

7. Given a list of valves SELECT which RCIC valves change position on RCIC with an Auto Initiation Signal present and the manual isolation pushbutton is depressed. (039.012.A.04)

6. 226001K2.02 001

Unit 2 is operating at 100% power with the following equipment out-of-service:

230KV breakers 470 & 480 are open to perform testing on Startup Transformer 2C.
EDG 1B due to oil leak just found (repairs in progress).

While waiting for the repairs to be completed for the 1B EDG Unit 2 experiences a Reactor Scram on High Drywell pressure due to a failure of Recirc Pump 2B seals. All automatic actions occur as designed with the current plant lineup. The 2B RHR Pump is _____ due to _____.

A. running, power supplied from 2C EDG.

B. not running, power not supplied from 1B EDG.

C. running, power supplied from SAT 2D.

D. not running, power not supplied from SAT 2C.

Reference: LT-LP-02701-03 Rev. 03 Electrical Distribution - Switchyard
LT-LP-02702-03 Rev. 03 4160 VAC Electrical Distribution
Tech Specs and Bases Section 3.8.1
EO 200.017.a.03

A. Incorrect since SAT 2D is still energized.

B. Incorrect due to power still available from SAT 2D.

C. Correct answer.

D. Incorrect since SAT 2D is the power supply.

RO Tier:	T2G2	SRO Tier:	T2G1
Keyword:	LOSS OF POWER	Cog Level:	C/A 2.9/2.9
Source:	N	Exam:	HT02301
Test:	C	Misc:	TCK

33. 226001K2.02 001

Unit 2 is operating at 100% power with the following equipment out-of-service:

230KV breakers 470 & 480 are open to perform testing on Startup Transformer 2C.
EDG 1B due to oil leak just found (repairs in progress).

While waiting for the repairs to be completed for the 1B EDG Unit 2 experiences a Reactor Scram on High Drywell pressure due to a failure of Recirc Pump 1B seals. All automatic actions occur as designed with the current plant lineup. The 2B RHR Pump is _____ due to _____.

A. running, power supplied from 2C EDG.

B. not running, power not supplied from 1B EDG.

C. running, power supplied from SAT 2D.

D. not running, power not supplied from SAT 2C.

Reference: LT-LP-02701-03 Rev. 03 Electrical Distribution - Switchyard
LT-LP-02702-03 Rev. 03 4160 VAC Electrical Distribution
Tech Specs and Bases Section 3.8.1
EO 200.017.a.03

A. Incorrect since SAT 2D is still energized.

B. Incorrect due to power still available from SAT 2D.

C. Correct answer.

D. Incorrect since SAT 2D is the power supply.

RO Tier:	T2G2	SRO Tier:	T2G1
Keyword:	LOSS OF POWER	Cog Level:	C/A 2.9/2.9
Source:	N	Exam:	HT02301
Test:	C	Misc:	TCK

16. 226001K2.02 001

Unit 2 is operating at 100% power with the following equipment out-of-service:

230KV breakers 470 and 480 to perform testing on Startup Transformer 2C.
EDG 1B due to oil leak just found (repairs in progress).

While waiting for the repairs to be completed for the 1B EDG Unit 2 experiences a Rx Scram on High Drywell pressure due to a failure of Recirc Pump 1B seals. All automatic actions occur as designed with the current plant lineup. The 2B RHR Pump is _____ due to _____.

A. running, power supplied from 2A EDG.

B. not running, power not supplied from 1B EDG.

C. running, power supplied from SAT 2D.

D. not running, power not supplied from SAT 2C.

Reference: LT-LP-02701-03 Rev. 03 Electrical Distribution - Switchyard
LT-LP-02702-03 Rev. 03 4160 VAC Electrical Distribution
Tech Specs and Bases Section 3.8.1
EO 200.017.a.03

A. Incorrect due to 1B EDG is the emergency power source and SAT 2D is still energized.

B. Incorrect due to power still available from SAT 2D.

C. Correct answer.

D. Incorrect since SAT 2D is the power supply.

a. Load supplied from 4160 VAC emergency buses.

b. Power supplies to 4160 VAC buses.

c. Control power for 4160 VAC emergency switchgear.

4. GIVEN a simplified drawing of the 4160 VAC electrical distribution system, correctly LABEL the following components. (027.008.a.01)

a. 4160 volt buses A through G.

b. 4160 VAC bus normal feeder breakers.

c. 4160 VAC bus alternate feeder breakers.

5. LIST Four 4160 VAC station service or emergency bus supply breaker interlocks. (027.007.a.02)

6. LIST Three 4160 VAC station service or emergency bus supply breaker trips. (027.007.a.03)

7. GIVEN 34SO-R22-001-2(1) S, "4160 VAC System" and 34SO-R43-001-2(1) S, "Diesel Generator Standby AC System", CHOOSE the correct conditions which are required for paralleling two AC sources including the following: (027.011.a.02)

a. Voltage relationship

b. Frequency relationship

c. Phase relationship

8. GIVEN the following list of control room controls for the 4160 VAC electrical distribution system, STATE the function of each: (027.010.a.02)

a. Interlock cutout switches.

b. LOSP lockout relay.

9. Given plant procedures, DETERMINE the proper operator actions to RACKOUT a 4160 VAC Breaker. (027.012.a.01)

10. Given plant procedures, DETERMINE the proper operator actions to RACKIN a 4160 VAC Breaker. (027.015a.02)

11. GIVEN plant conditions, correctly DETERMINE if 4160 VAC busses are Energized or De-Energized. (200.017.a.03)

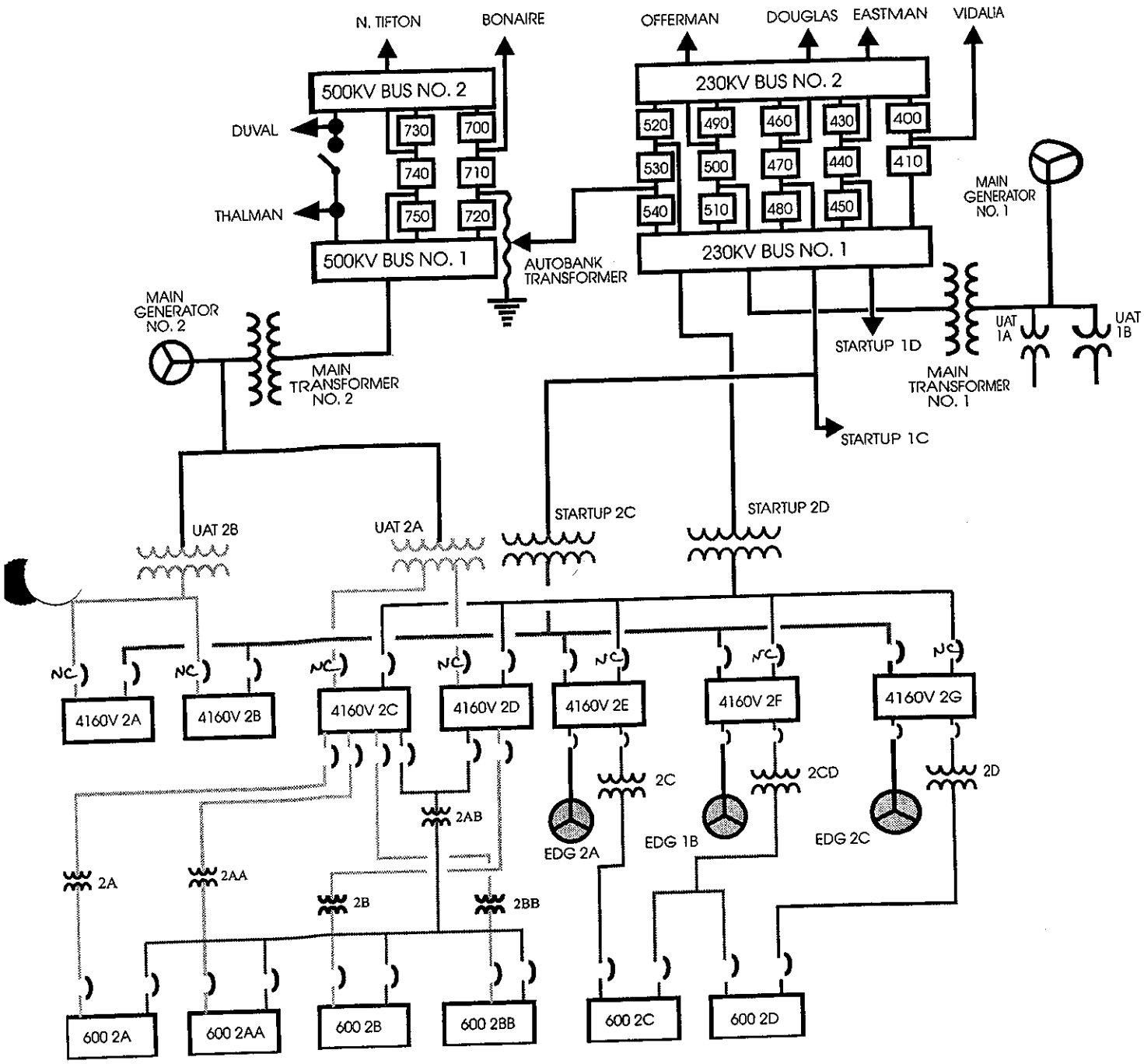

Plant Hatch Electrical Distribution Simplified Diagram

PE-02701 Fig 02

B 3.8 ELECTRICAL POWER SYSTEMS

B 3.8.1 AC Sources - Operating

BASES

BACKGROUND

The Unit 2 Class 1E AC Electrical Power Distribution System AC sources consist of the offsite power sources (preferred power sources, normal and alternate), and the onsite standby power sources (diesel generators (DGs) 2A, 2C, and 1B). As required by 10 CFR 50, Appendix A, GDC 17 (Ref. 1), the design of the AC electrical power system provides independence and redundancy to ensure an available source of power to the Engineered Safety Feature (ESF) systems.

The Class 1E AC distribution system is divided into redundant load groups, so loss of any one group does not prevent the minimum safety functions from being performed. Each load group has connections to two preferred offsite power supplies and a single DG.

Offsite power is supplied to the 230 kV and 500 kV switchyards from the transmission network by eight transmission lines. From the 230 kV switchyards, two electrically and physically separated circuits provide AC power, through startup auxiliary transformers 2C and 2D, to 4.16 kV ESF buses 2E, 2F, and 2G. A detailed description of the offsite power network and circuits to the onsite Class 1E ESF buses is found in the FSAR, Sections 8.2 and 8.3 (Ref. 2).

An offsite circuit consists of all breakers, transformers, switches, interrupting devices, cabling, and controls required to transmit power from the offsite transmission network to the onsite Class 1E ESF bus or buses.

Startup auxiliary transformer (SAT) 2D provides the normal source of power to the ESF buses 2E, 2F, and 2G. If any 4.16 kV ESF bus loses power, an automatic transfer from SAT 2D to SAT 2C occurs. At this time, 4.16 kV buses 2A and 2B and supply breakers from SAT 2C also trip open, disconnecting all nonessential loads from SAT 2C to preclude overloading of the transformer.

SATs 2C and 2D are sized to accommodate the simultaneous starting of all required ESF loads on receipt of an accident signal without the need for load sequencing. However, ESF loads are sequenced when the associated 4.16 kV ESF bus is supplied from SAT 2C.

A description of the Unit 1 offsite power sources is provided in the Bases for Unit 1 LCO 3.8.1, "AC Sources - Operating."

(continued)

BASES

BACKGROUND (continued)

The onsite standby power source for 4.16 kV ESF buses 2E, 2F, and 2G consists of three DGs. DGs 2A and 2C are dedicated to ESF buses 2E and 2G, respectively. DB 1B (the swing DG) is a shared power source and can supply either Unit 1 ESF bus 1F or Unit 2 ESF bus 2F. A DG starts automatically on a loss of coolant accident (LOCA) signal (i.e., low reactor water level signal or high drywell pressure signal) or on an ESF bus degraded voltage or undervoltage signal. After the DG has started, it automatically ties to its respective bus after offsite power is tripped as a consequence of ESF bus undervoltage or degraded voltage, independent of or coincident with a LOCA signal. The DGs also start and operate in the standby mode without tying to the ESF bus on a LOCA signal alone. Following the trip of offsite power, load shed relays strip nonpermanent loads from the ESF bus. When the DG is tied to the ESF bus, loads are then sequentially connected to its respective ESF bus by the automatic load sequence timing devices. The sequencing logic controls the permissive and starting signals to motor breakers to prevent overloading the DG.

In the event of a loss of preferred power, the ESF electrical loads are automatically connected to the DGs in sufficient time to provide for safe reactor shutdown and to mitigate the consequences of a Design Basis Accident (DBA) such as a LOCA.

Certain required plant loads are returned to service in a predetermined sequence in order to prevent overloading of the DGs in the process. After the initiating signal is received, all automatic and permanently connected loads needed to recover the unit or maintain it in a safe condition are returned to service (i.e., the loads are energized.)

Ratings for the DGs satisfy the requirements of Regulatory Guide 1.9 (Ref. 3). DGs 2A and 2C have the following ratings:

a. 2850 kW - continuous,

b. 3100 kW - 2000 hours,

c. 3250 kW - 300 hours, and

d. 3500 kW - 30 minutes.

DB 1B has the following ratings:

a. 2850 kW - 1000 hours, and

(continued)

34. 234000K6.02 001

Unit 2 is in a Refueling Outage with a core reload in progress. All Refueling related surveillances are current. The Unit NSO receives the "Vital AC power low" alarm and dispatches an operator to check voltages locally. The operator reports that the Vital AC voltage reading is 109V.

Based on this information which ONE of the following describes how Refueling Operations are affected?

A. Core Alterations can continue since a "refuel bridge stopped" alarm has not occured.

B. Core Alterations must be suspended immediately OR declare associated AC supported required features inoperable.

C. Core Alterations can continue until the next scheduled AC breaker alignment and voltage checks are due since power is still available to the refueling equipment.

D. Core Alterations can continue for 1 hr provided AC breaker alignment and voltage checks are completed within that hour.

References: Tech Spec 3.8.8 Distribution - Systems Shutdown
Tech Spec Bases 3.8.8 Distribution Systems - Shutdown Bases
LT-LP-02705-02 Rev.02 pg 30 of 42

A. Incorrect since the AC distribution system must be determined INOPERABLE due to the low voltage so Core Alterations must be stopped immediately.

B. Correct answer.

C. Incorrect since equipment must be declared INOPERABLE upon discovery on not being able to meet minimum requirements.

D. Incorrect since 1 hour is not provided to continue Core Alterations in the Tech Specs.
This question must be verified against the values in the weekly distribution surveillance. Also look at the alarm tiles that should be up for low voltage alarms.

RO Tier:	T2G3	SRO Tier:	T2G2
Keyword:	VITAL AC	Cog Level:	C/A 2.8/3.5
Source:	N	Exam:	HT02301
Test:	C	Misc:	TCK

17. 234000K6.02 001

Unit 2 is in a Refueling Outage with a core reload in progress. All Refueling related surveillances are current. The Unit NSO receives the "Vital AC power low" alarm and dispatches an operator to check voltages locally. The operator reports that the Vital AC voltage reading is 109V. Based on this information determine how Refueling Operations are affected.

A. Core Alterations can continue since a "refuel bridge stopped" alarm has not occured.

B. Core Alterations must be suspended immediately OR declare associated AC supported required features inoperable.

C. Core Alterations can continue until the next scheduled AC breaker alignment and voltage checks are due since power is still available to the refueling equipment.

D. Core Alterations can continue for 1 hr provided AC breaker alignment and voltage checks are completed within that hour.

References: Tech Spec 3.8.8 Distribution - Systems Shutdown
Tech Spec Bases 3.8.8 Distribution Systems - Shutdown Bases
LT-LP-02705-02 Rev.02 pg 30 of 42

A. Incorrect since the AC distribution system must be determined INOPERABLE due to the low voltage so Core Alterations must be stopped immediately.

B. Correct answer.

C. Incorrect since equipment must be declared INOPERABLE upon discovery on not being able to meet minimum requirements.

D. Incorrect since 1 hour is not provided to continue Core Alterations in the Tech Specs.
This question must be verified against the values in the weekly distribution surveillance. Also look at the alarm tiles that should be up for low voltage alarms.

TABLE 1
MAJOR VITAL AC LOADS

Reactor Manual Control (RMC)

Rod Position Indication System (RPIS)

Process Computer

Feedwater Control System

SRM, IRM, APRM, RBM recorders

Offgas Stack Isolation Valve Control Power

RWCU Pump Control Power

Turbine Supv. Instrument Panel (H11-P660)

Main Turbine Low Speed (LSSX) Relays/Quill Shaft Fail Relay

Post Accident Sample System - Computer

TIP System

Power Supplies Instrument For Reactor Recirculation Pump MG Sets

Gland Seal Blower and Vacuum Pump

Process Radiation Recorders (H11-P600)

Substation Ann. Power (H11-P659)

EHC Cabinet Solenoid Valves (H11-P663)

3.8 ELECTRICAL POWER SYSTEMS

3.8.8 Distribution Systems - Shutdown

LCO 3.8.8 The necessary portions of the following AC and DC electrical power distribution subsystems shall be OPERABLE:

a. The Unit 2 AC and DC electrical power distribution subsystems needed to support equipment required to be OPERABLE; and

b. The Unit 1 AC and DC electrical power distribution subsystems needed to support equipment required to be OPERABLE by LCO 3.6.4.3, "Standby Gas Treatment (SGT) System"; LCO 3.7.4, "Main Control Room Environmental Control (MCREC) System"; LCO 3.7.5, "Control Room Air Conditioning (AC) System"; and LCO 3.8.2, "AC Sources - Shutdown."

APPLICABILITY: MODES 4 and 5,
During movement of irradiated fuel assemblies in the secondary containment.

ACTIONS

CONDITION	REQUIRED ACTION	COMPLETION TIME
A. One or more required AC or DC electrical power distribution subsystems inoperable.	A.1 Declare associated supported required feature(s) inoperable.	Immediately
	OR	
	A.2.1 Suspend CORE ALTERATIONS.	Immediately
	AND	
	A.2.2 Suspend handling of irradiated fuel assemblies in the secondary containment.	Immediately
	AND	
		(continued)

ACTIONS

CONDITION	REQUIRED ACTION	COMPLETION TIME
A. (continued)	A.2.3 Initiate action to suspend operations with a potential for draining the reactor vessel.	Immediately
	AND	
	A.2.4 Initiate actions to restore required AC and DC electrical power distribution subsystem(s) to OPERABLE status.	Immediately
	AND	
	A.2.5 Declare associated required shutdown cooling subsystem(s) inoperable and not in operation.	Immediately

SURVEILLANCE REQUIREMENTS

SURVEILLANCE		FREQUENCY
SR 3.8.8.1	Verify correct breaker alignments and voltage to required AC and DC electrical power distribution subsystems.	7 days

BASES (continued)

ACTIONS

A.1, A.2.1, A.2.2, A.2.4, and A.2.5

Although redundant required features may require redundant electrical power distribution subsystems to be OPERABLE, one OPERABLE distribution subsystem may be capable of supporting sufficient required features to allow continuation of CORE ALTERATIONS, fuel movement, and operations with a potential for draining the reactor vessel. By allowing the option to declare required features associated with an inoperable distribution subsystem inoperable, appropriate restrictions are implemented in accordance with the affected distribution subsystem LCO's Required Actions. In many instances this option may involve undesired administrative efforts. Therefore, the allowance for sufficiently conservative actions is made, (i.e., to suspend CORE ALTERATIONS, movement of irradiated fuel assemblies in the secondary containment, and any activities that could result in inadvertent draining of the reactor vessel).

Suspension of these activities shall not preclude completion of actions to establish a safe conservative condition. These actions minimize the probability of the occurrence of postulated events. It is further required to immediately initiate action to restore the required AC and DC electrical power distribution subsystems and to continue this action until restoration is accomplished in order to provide the necessary power to the plant safety systems.

Notwithstanding performance of the above conservative Required Actions, a required residual heat removal-shutdown cooling (RHR SDC) subsystem may be inoperable. In this case, Required Actions A.2.1 through A.2.4 do not adequately address the concerns relating to coolant circulation and heat removal. Pursuant to LCO 3.0.6, the RHR SDC ACTIONS would not be entered. Therefore, Required Action A.2.5 is provided to direct declaring RHR SDC inoperable, which results in taking the appropriate RHR SDC ACTIONS.

The Completion Time of immediately is consistent with the required times for actions requiring prompt attention. The restoration of the required distribution subsystems should be completed as quickly as possible in order to minimize the time the plant safety systems may be without power.

(continued)

BASES (continued)

SURVEILLANCE REQUIREMENTS

SR 3.8.8.1

This Surveillance verifies that the AC and DC electrical power distribution subsystem is functioning properly, with the buses energized. The verification of proper voltage availability on the buses ensures that the required voltage is readily available for motive as well as control functions for critical system loads connected to these buses. The 7 day Frequency takes into account the redundant capability of the electrical power distribution subsystems, as well as other indications available in the control room that alert the operator to subsystem malfunctions.

REFERENCES

1. FSAR, Chapter 6.

2. FSAR, Chapter 15.

3. NRC No. 93-102, "Final Policy Statement on Technical Improvements," July 23, 1993.

1. 239001K4.04 001

Which ONE of the following describes the purpose of the Main Steam Line Flow Restrictors?

A. To prevent the uncontrolled release of radioactive material to the environs following a steam line rupture outside containment to the extent that the CFR 100 limits are not exceeded at the site boundary.

B. To limit the loading on the steam lines following a steam line rupture outside containment such that the failure of one steam line would not result in a MSIV isolation from high main steam line flow.

C. To limit the pressure reduction following a steam line rupture outside containment such that the safety limit of 785 psig is not reached with reactor power >25% prior to the MSIV's closing.

D. To work in conjunction with the MSIV's to limit flow on a steam line rupture which assures the steam dryer and other internal structures in the vessel remain in place.

Reference: SI-LP-01401-00 Rev. 00 Pg 9 of 45

A. Incorrect since the isolation of the MSIV's perform this function.

B. Incorrect since the flow restrictors limit the loss of coolant from the vessel on a steam line break.

C. Incorrect since the flow restrictors are concerned with the loss of coolant and not the pressure reduction.

D. Correct answer.

RO Tier:	T2G2	SRO Tier:	T2G3
Keyword:	MSL FLOW RESTRICTOR	Cog Level:	MEM 3.4/3.5
Source:	N	Exam:	HT02301
Test:	C	Misc:	TCK

35. 239001K4.04 001

Which ONE of the following describes the purpose of the Main Steam Line Flow Restrictors?

A. To limit the uncontrolled release of radioactive material to the environs following a steam line rupture outside containment to the extent that the CFR 100 limits are not exceeded at the site boundary.

B. To limit the loading on the steam lines following a steam line rupture outside containment such that the failure of one steam line would not result in a MSIV isolation from high main steam line flow.

C. To limit the pressure reduction following a steam line rupture outside containment such that the safety limit of 785 psig is not reached with reactor power >25% prior to the MSIV's closing.

D. To limit the loss of coolant from the RPV following a steam line rupture outside containment to the extent that the RPV water level would not reach TAF prior to the MSIV's closing.

Reference: FSAR section 5.5.4 Main Steam Line Flow Restrictors
SI-LP-01401-00 Rev. 00 Pg 9 of 45

A. Incorrect since the isolation of the MSIV's perform this function.

B. Incorrect since the flow restrictors limit the loss of coolant from the vessel on a steam line break.

C. Incorrect since the flow restrictors are concerned with the loss of coolant and not the pressure reduction.

D. Correct answer.

RO Tier:	T2G2	SRO Tier:	T2G3
Keyword:	MSL FLOW RESTRICTOR	Cog Level:	MEM 3.4/3.5
Source:	N	Exam:	HT02301
Test:	C	Misc:	TCK

QUESTIONS REPORT
for HT2002

1. 239001K4.04 001

The purpose of the Main Steam Line Flow Restrictors is to limit the loss of coolant from the RPV following a steam line rupture outside containment to the extent that: (SELECT the appropriate response below)

A. the RPV water level would not reach the Low Low ECCS initiation setpoint prior to the MSIV's closing.

B. the RPV water level would not reach the low level scram setpoint prior to the MSIV's closing.

C. the RPV water level would not reach 2/3 Core Height prior to the MSIV's closing.

D. the RPV water level would not reach TAF prior to the MSIV's closing.

Reference: FSAR section 5.5.4 Main Steam Line Flow Restrictors
SI-LP-01401-00 Rev. 00 Pg 9 of 45

A. Incorrect since design is to limit coolant loss so that TAF is not reached prior to MSIV's closing.

B. Incorrect since design is to limit coolant loss so that TAF is not reached prior to MSIV's closing.

C. Incorrect since design is to limit coolant loss so that TAF is not reached prior to MSIV's closing.

D. Correct answer.

A hydrostatic test at a pressure not to exceed system operational pressure is made following each removal and replacement of the reactor vessel head.

Inservice inspection is considered in the design of the RRS to ensure adequate working space and access for inspection of selected components in accordance with the ASME Boiler and Pressure Vessel Code, Section XI. The criteria for selecting the components and locations to be inspected are based on the probability of a defect occurring or enlarging at a given location, including areas of known stress concentrations and locations where cyclic strain or thermal stress might occur. The RRS pump casings, valve bodies, and piping connection welds are visually inspected and given other nondestructive inspections from at least one side on a periodic basis.

5.5.2 STEAM GENERATORS

Steam generators are not applicable to a BWR.

5.5.3 REACTOR COOLANT PIPING

The RRS piping is discussed as part of the RRS in subsection 5.5.1. The RRS loops are shown on figure 5.5-1 and drawing no. H-26003. The design characteristics are presented in table 5.5-1.

5.5.4 MAIN STEAM LINE FLOW RESTRICTORS

5.5.4.1 Safety Design Bases

The main steam line flow restrictors are designed to:

- Limit the loss of coolant from the RPV following a steam line rupture outside the primary containment to the extent that the RPV water level does not fall below the top of the core within the time required to close the main steam isolation valves (MSIVs).
- Withstand the maximum pressure difference expected across the restrictor, following complete severance of a main steam line.

5.5.4.2 Description

A main steam line flow restrictor is provided for each of the four main steam lines, as shown in figure 5.5-4. The restrictor is a complete assembly welded into the main steam line. It is located between the RPV and first MSIV and is downstream of the main steam line safety relief valves. The restrictor limits the coolant blowdown rate from the RPV in the event a main steam

Fig 8

C. Main Steam Line Flow Restrictors

A flow restrictor consisting of a venturi type nozzle insert is welded into each of the main steam lines between the relief valves and the inboard MSIVs. The main steam line flow restrictors work in conjunction with the main steam line isolation valves (MSIVs) to limit flow on a steam line rupture. This assures that the steam dryer and other internal structures in the vessel remain in place. The flow restrictors limit flow in a severed steam line to 200% or rated.

The differential pressure across the flow restrictor is utilized for the following:

1. Provides individual and total steam flow indications.

2. Provides steam flow input to the feedwater control system.

3. Provides steam flow input to the Group I isolation circuit.

Fig 1

D. Safety Relief Valves (F013 Valves)

The reactor and the steam system are protected from overpressure by 11 safety relief valves. The relief valves are located inside the primary containment on a horizontal section of the main steam line piping between the reactor penetration and the flow restrictors. All relief valves discharge to the suppression pool to permit the steam to condense in the pool when a relief valve operates. Each relief valve is capable of passing approximately 8% of rated steam flow.

Fig 4

The safety relief valves installed at Hatch are Two Stage Target Rock. These are pilot operated safety relief valves consisting of the pilot stage assembly and the main stage assembly. The pilot stage assembly is the pressure sensing and control element. The main stage assembly is the main piston and valve which provides the pressure relief function. Each SRV has an accumulator that stores enough volume to cycle the SRV at least two times in the event Drywell pneumatics is lost.

The relief valves are designed to operate automatically or manually. All SRVs can be manually operated from Control Room panel 2H11-P602. In addition, SRVs B & F (C & G) can be operated manually from the remote shutdown panel.

SRVs topworks are removed and tested at WYLE labs each outage. Test results consistently indicate that ANYTIME a SRV is opened (near rated pressure), it will remain open until pressure has decreased to approximately 85% of its lift pressure. This means that pressure must decrease about 150 psig before the SRV will reset from any mode of operation.

36. 239002A1.01 001

Unit 1 reactor has just scrammed due to an inadvertent Group I isolation. The Shift Supervisor has entered RC RPV CONTROL (NON-ATWS) and ordered a reactor pressure band of 800 - 1080 psig using the relief valves.

Which ONE of the following describes the indications you would expect to see when you opened a relief valve?

A. The RED indicator light is lit, annunciator SAFETY BLOWDOWN PRESSURE HIGH is clear, and reactor pressure is decreasing.

B. The GREEN indicator light will extinguish, the YELLOW indicator light is not lit, and tailpipe temperature indication is increasing.

C. The YELLOW indicator light is lit, annunciator SAFETY BLOWDOWN PRESSURE HIGH is alarming, and tailpipe temperature indication is increasing.

D. Reactor pressure is decreasing, the RED indicator light is out, and the GREEN indicator light is out.

References: 34SO-B21-001-2S, Automatic Depressurization (ADS) and Low-Low Set (LLS) System, Rev.13.3 pg 16 of 31

A. Incorrect since the annunciator for SAFETY BLOWDOWN PRESSURE HIGH should be in alarm.

B. Incorrect since the YELLOW light should illuminate.

C. Correct answer.

D. Incorrect since the RED indicating light should be illuminated.

RO Tier:	T2G1	SRO Tier:	T2G1
Keyword:	RELIEF VALVE	Cog Level:	MEM 3.3/3.4
Source:	N	Exam:	HT02301
Test:	C	Misc:	TCK

QUESTIONS REPORT
for HT2002

1. 239002A1.01 001

Unit 1 reactor has just scrammed due to an inadvertent Group I isolation. The Shift Supervisor has entered RC RPV CONTROL (NON-ATWS) and ordered a reactor pressure band of 800 - 1000 psig using the relief valves.

Which ONE of the following describes the indications you would expect to see when you opened a relief valve?

A. The RED indicator light is lit, annunciator SAFETY BLOWDOWN PRESSURE HIGH is clear, and reactor pressure is decreasing.

B. The GREEN indicator light will extinguish, the YELLOW indicator light is not lit, and tailpipe temperature indication is increasing.

C. The YELLOW indicator light is lit, annunciator SAFETY BLOWDOWN PRESSURE HIGH is alarming, and tailpipe temperature indication is increasing.

D. Reactor pressure is decreasing, the RED indicator light is out, and the GREEN indicator light is out.

References: 34SO-B21-001-2S, Automatic Depressurization (ADS) and Low-Low Set (LLS) System, Rev.13.3 pg 16 of 31

A. Incorrect since the annunciator for SAFETY BLOWDOWN PRESSURE HIGH should be in alarm.

B. Incorrect since the YELLOW light should illuminate.

C. Correct answer.

D. Incorrect since the RED indicating light should be illuminated.

QUESTIONS REPORT
for HT2002

1. 239002A1.01 001

Unit 1 reactor has just scrammed due to an inadvertent Group I isolation. The Shift Supervisor has entered RC RPV CONTROL (NON-ATWS) and ordered a reactor pressure band of 800 - 1000 psig using the relief valves. SELECT the answer that lists the indications you would expect to see when you opened a relief valve.

A. The RED indicator light is lit, annunciator SAFETY BLOWDOWN PRESSURE HIGH is clear, and reactor pressure is decreasing.

B. The GREEN indicator light will extinguish, the YELLOW indicator light is not lit, and tailpipe temperature indication is increasing.

C. The YELLOW indicator light is lit, annunciator SAFETY BLOWDOWN PRESSURE HIGH is alarming, and tailpipe temperature indication is increasing.

D. Reactor pressure is decreasing, the RED indicator light is out, and the GREEN indicator light is out.

References: 34SO-B21-001-2S, Automatic Depressurization (ADS) and Low-Low Set (LLS) System, Rev.13.3 pg 16 of 31

A. Incorrect since the annunciator for SAFETY BLOWDOWN PRESSURE HIGH should be in alarm.

B. Incorrect since the YELLOW light should illuminate.

C. Correct answer.

D. Incorrect since the RED indicating light should be illuminated.

7.4 INFREQUENT OPERATIONS

7.4.1 Manual Operation of Safety Relief Valves From Panel 2H11-P602

CONTINUOUS

NOTE

-UNLESS otherwise noted, all steps will be performed at Panel 2H11-P602.

-IF possible, operate the safety valves in the following sequence to control Suppression Pool heat distribution: M, B, G, F, D, L, K, C, A, E, H. Posted 2H11-P602

NOTE

1. The red indicator light shows ONLY that the actuating solenoid is energized. It is NOT positive indication of valve position. The RED light will be illuminated only when the electrical signal is present to open the SRV.
2. The YELLOW light indicates the Tailpipe Pressure switch has reached its setpoint.
3. The GREEN light will extinguish with the Control Switch in OPEN.
4. In the event of a reactor vessel flooding incident, the temperature/pressure associated with a water environment may not actuate the 85 psig pressure switches as normally expected with an SRV open demand present. Operator action for failure OR apparent failure of SRV's should be to enter 34AB-B21-003-2S, Failure Of Safety/Relief Valves.

7.4.1.1 OPEN any safety relief valve(s) by placing its control switch to the OPEN position.

7.4.1.2 Confirm the red valve indicator light is ILLUMINATED.

7.4.1.3 Confirm tailpipe temperature indication for the open valve on Auto Blowdown/Safety Vlv Temps recorder, 2B21-R614, Panel 2H11-P614, is increasing AND annunciator SAFETY BLOWDOWN PRESSURE HIGH (602-311) is alarming.

NOTE

-Safety Relief Valves 2B21-F013A, C, E, H, K, L, M are ADS/Auto Relief Valves.

-Safety Relief Valves 2B21-F013B, D, F, G are LLS/Manual Relief Valves.

7.4.1.4 IF an ADS valve is open, AND the desired reactor pressure reduction is achieved, CLOSE the valve by placing its control switch to the AUTO position.

7. 241000K6.05 001

Unit 2 is holding load at 75% Reactor Power when the operator receives the "Turbine Vacuum Low" alarm.

Which ONE of the following describes the expected sequence of actions as condenser vacuum continues to decrease from 24.7" Hg Vac (alarm setoint) to 0" Hg Vac?

A. 1st - Main Turbine trips.
2nd - RFP turbine trips and Main Turbine Bypass Valves close at the same time.
3rd - MSIV's close.

B. 1st - Main Turbine and RFP turbine trip at the same time.
2nd - Main Turbine Bypass Valves close.
3rd - MSIV's close.

C.✓ 1st - Main Turbine and RFP turbine trip at the same time.
2nd - MSIV's close.
3rd - Main Turbine Bypass Valves close.

D. 1st - RFP turbine trips and Main Turbine Bypass Valves close at the same time.
2nd - MSIV's close.
3rd - Main Turbine trips.

Reference: SI-LP-02501-00 Rev. SI-00 Pg 7 of 13.
EO 200.087.a.01

A. Incorrect since RFP's and Main Turbine trip at the same time at 22.3" Hg Vac.

B. Incorrect since MSIV's close at 10" Hg Vac and Bypass valves close at 7" Hg Vac.

C. Correct answser since RFP's and Main Turbine trip at the same time at 22.3" Hg Vac, MSIV's close at 10" Hg Vac and Bypass valves close at 7" Hg Vac.

D. Incorrect since Main Turbine trips prior to the MSIV's closing.

RO Tier:	T2G1	SRO Tier:	T2G1
Keyword:	CONDENSER VACUUM	Cog Level:	MEM 3.4/3.4
Source:	B	Exam:	HT02301
Test:	C	Misc:	TCK

38. 241000K6.05 001

Unit 2 is holding load at 75% Reactor Power when the operator receives the Low Main Condenser Vacuum alarm.

Which ONE of the following describes the expected sequence of actions as condenser vacuum continues to decrease from 24.7" Hg Vac (alarm setoint) to 0" Hg Vac?

A. 1st - Main Turbine trips.
2nd - RFP turbine trips and Main Turbine Bypass Valves close at the same time.
3rd - MSIV's close.

B. 1st - Main Turbine and RFP turbine trip at the same time.
2nd - Main Turbine Bypass Valves close.
3rd - MSIV's close.

C. 1st - Main Turbine and RFP turbine trip at the same time.
2nd - MSIV's close.
3rd - Main Turbine Bypass Valves close.

D. 1st - RFP turbine trips and Main Turbine Bypass Valves close at the same time.
2nd - MSIV's close.
3rd - Main Turbine trips.

Reference: SI-LP-02501-00 Rev. SI-00 Pg 7 of 13.
EO 200.087.a.01

A. Incorrect since RFP's and Main Turbine trip at the same time at 22.3" Hg Vac.

B. Incorrect since MSIV's close at 10" Hg Vac and Bypass valves close at 7" Hg Vac.

C. Correct answser since RFP's and Main Turbine trip at the same time at 22.3" Hg Vac, MSIV's close at 10" Hg Vac and Bypass valves close at 7" Hg Vac.

D. Incorrect since Main Turbine trips prior to the MSIV's closing.

RO Tier:	T2G1	SRO Tier:	T2G1
Keyword:	CONDENSER VACUUM	Cog Level:	MEM 3.4/3.4
Source:	B	Exam:	HT02301
Test:	C	Misc:	TCK

20. 241000K6.05 001

Unit 2 is holding load at 75% Reactor Power when the operator receives the Low Main Condenser Vacuum alarm. Select the answer below that describes the expected sequence of actions as condenser vacuum continues to decrease from 24.7" Hg Vac (alarm setoint) to 0" Hg Vac.

A. 1st - Main Turbine trips.
2nd - RFP turbine trips and Main Turbine Bypass Valves close at the same time.
3rd - MSIV's close.

B. 1st - Main Turbine and RFP turbine trip at the same time.
2nd - Main Turbine Bypass Valves close.
3rd - MSIV's close.

C. 1st - Main Turbine and RFP turbine trip at the same time.
2nd - MSIV's close.
3rd - Main Turbine Bypass Valves close.

D. 1st - RFP turbine trips and Main Turbine Bypass Valves close at the same time.
2nd - Main Turbine trips.
3rd - MSIV's close.

Reference: SI-LP-02501-00 Rev. SI-00 Pg 7 of 13.
EO 200.087.a.01

A. Incorrect since RFP's and Main Turbine trip at the same time at 22.3" Hg Vac.

B. Incorrect since MSIV's close at 10" Hg Vac and Bypass valves close at 7" Hg Vac.

C. Correct answser since RFP's and Main Turbine trip at the same time at 22.3" Hg Vac, MSIV's close at 10" Hg Vac and Bypass valves close at 7" Hg Vac.

D. Incorrect since MSIV's close before the Bypass valves.

B. Condensate System

Supplies cooling water to the intercondensers for first and second stage SJAEs and the gland seal condenser. It also supplies the motive force for hydraulic ejectors for the SJAE drain tank.

Fig 1

C. Main Stack

Receives discharge from the mechanical vacuum pump and the gland seal condenser exhausters.

D. Offgas System

Receives discharge from the SJAE third stage.

E. Main Steam System

Supplies steam to the SJAEs via the SJAE pressure reducer.

F. Plant Service Water System

Supplies cooling water to the heat exchanger for the Mechanical Vacuum pump.

G. Demineralized Water Transfer System

Supplies water to the mechanical vacuum pump separator tank.

H. Main Turbine/Generator System

Exhaust steam from the main turbine is exhausted to the main condenser.

V. Control Features & Interlocks

A. Trips and Alarms

There are several trips and alarms associated with Main Condenser Vacuum. They are as follows:

1. 24.7" Hg Vac Low Main Condenser Vacuum Alarm is received on panel P650 in the Control Room.

2. 22.3" Hg Vac Main Turbine and Reactor Feed Pump turbine trip.

3. 10" Hg Vac MSIVs will close.

4. 7" Hg Vac Main Turbine bypass valves will close.
This prevents the admitting additional steam, which may cause overpressurization of the condenser.

If condenser pressure would continue to increase, the condenser is protected by over pressure rupture discs located on the LP turbine which will blow at 5# condenser internal pressure.

B. Interlocks

1. Steam supply valve 2N11-F008A/B (1N11-F036A/B) for first step of SJAE will auto close when:

   - When steam supply pressure is <180#.
   - Condensate pressure from 1st and 2nd stage return from intercondensers is <100#.

2. Inner suction valve 2N22-F004A/B (1N22-F011A/B) for main condenser auto close when:

   - Steam supply flow to 3rd stage air ejector is <2000lbm/hr

3. Outer suction valve, 2N22-F005A/B (1N22-F505A/B) from main condenser will auto close when:

   - First stage steam pressure is <125# as measured after the pressure control valve.

VI. Integrated System Response

A. Condenser tube leaks

There are four conditions that could indicate the condenser tubes are leaking circulating water into the main condenser.

- Increased condensate demineralizer influent conductivity
- Decreased lifetime of condensate demineralizer units.

OBJECTIVES

TERMINAL OBJECTIVES

025.002.A During a Reactor startup, STARTUP the Mechanical Vacuum Pump per 34SO-N61-001-2/1S, "Main Condenser Vacuum System"

025.003.A As the Reactor startup continues and the "A" SJAE has just been placed in service and condenser vacuum is increasing, SECURE the mechanical vacuum pump per 34SO-N61-001-2/1S.

025.004.A Given startup conditions where Reactor pressure is increasing to approximately 400# and the mechanical vacuum pump is in operation, STARTUP the "A" SJAE per 34SO-N61-001-2/1S, "Main Condenser Vacuum System."

025.010.A During a Reactor startup, ADMIT steam to the seals with Main Steam per 34SO-N33-001-2/1S, "Seal Steam System."

0.033.A Given plant conditions of increasing condensate conductivity and decreasing lifetime of condensate filters, RECOGNIZE and RESPOND to a Main Condenser tube leak per 34AB-N61-061-2/1S.

200.087.A The main turbine generator is at rated conditions and annunciator "Turbine Vacuum Low" is alarming, RECOGNIZE and RESPOND to a decreasing condenser vacuum.

ENABLING OBJECTIVES

1. IDENTIFY the two major hazards associated with using the mechanical vacuum pump to maintain condenser vacuum with Reactor Power greater than 5% Thermal. (025.002.a.01)

2. Given a list of plant conditions, ANALYZE those conditions to determine if the mechanical vacuum pump should be shut down. (025.003.a.01)

3. IDENTIFY the reason for having a seal steam system. (025.010.a.03)

4. As condenser vacuum decreases to 0"Hg Vac from rated conditions. DETERMINE the correct sequence of events for the following and List set points: (200.087.a.01)

   a. Bypass valves
   b. RFPT
   c. MSIVs
   d. Main Turbine
   e. Turbine low vacuum alarm

7. 245000K1.09 001

Which ONE of the following describes the effect that a loss of the "2A" 125/250V DC Switchgear will have on the Unit 2 Main Turbine Generator?

A. Remote trip capability for the generator output breakers AND the exciter field breaker will be lost.

B. Remote trip capability for the generator output breaker will be lost, but the exciter field breaker can still be controlled remotely.

C. The generator output breakers will fail to open automatically, but the exciter field breaker can still be tripped from the control room.

D. The generator output breakers will fail to open automatically AND the exciter field breaker must be opened locally.

References: 34AB-R22-001-2S Rev.2.3 Pg 3

A. Incorrect, IAW 34-AB-R22-001-2S the generator output breakers will not open automatically. However, they will open from the control room but the exciter field breaker must be opened locally.

B. Incorrect, IAW 34-AB-R22-001-2S the generator output breakers will not open automatically and the exciter field breaker must be opened locally.

C. Incorrect, IAW 34-AB-R22-001-2S the generator output breakers will fail to open automatically, however, the exciter field breaker must be opened locally.

D. Correct, IAW 34-AB-R22-001-2S the generator output breakers will fail to open automatically and the exciter field breaker must be opened locally.

RO Tier:	T2G2	SRO Tier:	T2G2
Keyword:	DC CONTROL POWER	Cog Level:	MEM 2.7/2.7
Source:	N	Exam:	HT02301
Test:	C	Misc:	TCK

I. LOSS OF 125/250V DC SWITCHGEAR 2A, 2R22-S016

1.0 CONDITIONS

1.1 Loss of DC control power indicating lights on panel 2H11-P651.

1.2 ANNUNCIATORS

- 125/250V BATT CHGR MALFUNCTION, 651-126
- 125/250V BATTERY VOLTS LOW, 651-125
- Various Generator Trips on Panel 2H11-P651
- Various Main Turbine Trips on Panel 2H11-P650
- RCIC TURBINE TRIP, 602-301
- RCIC VALVES MOTOR OVERLOAD, 602-309

1.3 Loss of power to equipment listed on Attachments 1, 3, 5, 7, 9 & 10 and part of SPDS and ERF.

2.0 AUTOMATIC ACTIONS

2.1 Main Turbine trips on loss of DC Power to EHC.

2.2 Reactor scrams, IF reactor power is ≥ 28% RTP.

2.3 Reactor Recirc Pumps A & B trip, IF reactor power is ≥ 28% RTP.

3.0 IMMEDIATE OPERATOR ACTIONS

3.1 IF the exciter field breaker is open OR exhaust hood spray is NOT available OR not functioning properly, manually OPEN Main Generator output breakers.

3.2 Transfer Feedwater Level Control Select switch to "A" level per 34SO-N21-007-2S, Condensate and Feedwater System.

3.3 Transfer Feedwater Level Control to single element per 34SO-N21-007-2S, Condensate and Feedwater System.

4.0 SUBSEQUENT OPERATOR ACTIONS

CAUTIONS

-TURBINE WILL TRIP BUT GENERATOR OUTPUT BREAKERS WILL NOT AUTO OPEN. 4160V BUSES WILL NOT TRANSFER TO STARTUP SUPPLY. TO PREVENT EXCESSIVE MOTORING OF THE GENERATOR AND OVERHEATING OF THE LAST STAGE LOW PRESSURE TURBINE BUCKETS, THE MAIN GENERATOR OUTPUT BREAKERS MUST BE OPENED WITHIN 4 MINUTES OF THE TURBINE TRIP, PROVIDED THE EXCITER FIELD BREAKER REMAINS CLOSED AND EXHAUST HOOD SPRAY IS AVAILABLE AND FUNCTIONING PROPERLY.

-RFPT 2A AND 2B WILL NOT TRIP MANUALLY OR AUTOMATICALLY DUE TO LOSS OF POWER TO THEIR TRIP CIRCUITS. IF 4160V BUSES 2C AND 2D ARE LOST, RFPT 2A AND 2B WILL BE RUNNING WITHOUT THE CONDENSATE SYSTEM SUPPLYING SUCTION AND WITHOUT OIL PRESSURE.

-WHEN 2R25-S003 (FED FROM 2R22-S016) IS RE-ENERGIZED, THE AUTO TRANSFER LOGIC WILL CLOSE IN THE STARTUP SUPPLY BRKRS TO THE DEAD 4160V BUSES 2A, 2B, 2C, & 2D. ALL 4160V PUMPS MUST BE STRIPPED OFF 4160V BUSES 2A, 2B, 2C & 2D, PRIOR TO RE-ENERGIZING 2R25-S003.

4.1 IF the exciter field breaker is closed AND exhaust hood spray is available AND functioning properly, manually OPEN the main generator output breakers WITHIN 4 minutes of the turbine trip.

4.2 WHEN the main generator output breakers are opened, manually trip the exciter field breaker locally.

4.3 IF 4160V Buses 2C and 2D are de-energized, locally trip RFPT 2A AND 2B by pulling their trip handles.

NOTE

All supply breakers of the 4160V buses 2A, 2B, 2C and 2D, equipment breakers of 2C and 2D, and equipment breakers of 600V buses 2A, 2B, 2AA, 2BB and 2C cannot be tripped except by manual operation of the breaker.

4.4 Attempt to restore power to 2R22-S016, Bus 2A.

4.4.1 OPEN all breakers on Bus 2A.

39. 245000K1.09 001

On a turbine trip from a loss of 125/250 VDC Switchgear "A", which ONE of the following is the reason an operator must be sent to locally trip the Generator Exciter Field Breaker after the PCB's open?

A. Without D.C. the Exciter Field Breaker doesn't know that the PCB's are open so the operator must open the breaker locally.

B. This is only a backup action since the Exciter Field Breaker should be open.

C. Power is not available to energize the breaker trip coil.

D. Control power for the Exciter Field Breaker has been lost.

References: LT-LP-02704 Rev. 03, pg. 37 of 61

A. Incorrect since PCB's do not send a signal to the exciter field breaker.

B. Incorrect since this is not a backup action but an action that must be taken.

C. Incorrect since D.C. does not energize the trip coil.

D. Correct answer.

NOTE: verify these answers with the e-prints prior to using.

RO Tier:	T2G2	SRO Tier:	T2G2
Keyword:	DC CONTROL POWER	Cog Level:	MEM 2.7/2.7
Source:	N	Exam:	HT02301
Test:	C	Misc:	TCK

QUESTIONS REPORT
for HT2002

1. 245000K1.09 001

On a turbine trip from a loss of D.C. an operator must be sent to locally trip the Generator Exciter Field Breaker after the PCB's open. Which one of the following is the reason for this action?

A. Without D.C. the Exciter Field Breaker doesn't know that the PCB's are open so the operator must open the breaker locally.

B. This is only a backup action since the Exciter Field Breaker should be open.

C. Power is not available to energize the breaker trip coil.

D. Control power for the Exciter Field Breaker has been lost.

References: LT-LP-02704 Rev. 03, pg. 37 of 61

A. Incorrect since PCB's do not send a signal to the exciter field breaker.

B. Incorrect since this is not a backup action but an action that must be taken.

C. Incorrect since D.C. does not energize the trip coil.

D. Correct answer.

NOTE: verify these answers with the e-prints prior to using.

There is a difference between the loss of a DC Bus and the loss of a DC Cabinet when restoring power to the component that lost power. Guidance is found in 34AB-R22-001-1/2S, "Loss of DC Buses".

Point out that the actions needed to be carried out in 34AB-R22-001-1/2S are explained in the LRQ lesson plan.

- On the loss of a DC Bus, the bus shall be stripped of all loads prior to closing the supply breaker. This will prevent the supply breaker from tripping on the current surge caused by the restarting of bus loads.
- On the loss of a DC Cabinet, an attempt should be made to shut the supply breaker without stripping loads. If the supply will not shut or stay shut, then strip the cabinet in order to find the faulted component.

EO 5

On a loss of 125/250 VDC Switchgear "A", R22-S016, the following major events occur:

- Main turbine will trip but output breakers must be opened manually to prevent motorizing the turbine.
- Reactor scrams and both recirc pumps trip if power is greater than 30%.
- RCIC is not available and all indication for DC powered RCIC loads are lost.
- The LPCI mode of RHR on Unit 1 is not available for the "A" loop due to E11-F015A losing power as a result of the Essential (LPCI) Inverter "A" (R24-S018A) being de-energized.
- Some reactor instrumentation is lost.

42. 259002K3.02 001

Unit 2 is holding load at 80% Reactor Power. The Feedwater Level Control system is in 3 element control.

Which ONE of the following describes what RPV water level should do if a loss of control signal from RFPT "A" M/A controller occurred?

A. INCREASE due to loss of a feed flow signal resulting in a steam flow / feed flow mismatch.

B. REMAIN THE SAME due to RFPT "A" decreasing speed to it's "low speed stop" and the "B" RFPT increasing speed toward it's "high speed stop".

C. DECREASE initially and STABILIZE approximately 6" lower due to loss of feed flow input.

D. REMAIN THE SAME due to RFPT "A" defaulting to the speed setter and RFPT "B" controlling level in auto.

Reference: SI-LP-00201-00 Rev. SI-00 Pg. 27 of 47.
Question #LT-LP-002027-0002
EO 002.004.a.08
Minor rewording of question and order of answers.

A. Incorrect since loss of signal results in default level signal being used (37") for the failed controller to the associated RFPT.

B. Incorrect since RFPT with failure does not go to low speed stop and the unaffected RFPT does not go towards the high speed stop.

C. Incorrect since level is maintained by the unaffected RFPT at the normal operating level.

D. Correct answer.

RO Tier:	T2G1	SRO Tier:	T2G1
Keyword:	FEEDWATER LEVEL	Cog Level:	C/A 3.7/3.7
Source:	B	Exam:	HT02301
Test:	C	Misc:	TCK

22. 259002K3.02 001

Unit 2 is holding load at 80% Reactor Power. The Feedwater Level Control system is in 3 element control. If a loss of control signal from RFPT "A" M/A controller occurred, RPV water level should:

A. INCREASE due to loss of a feed flow signal resulting in a steam flow / feed flow mismatch.

B. REMAIN THE SAME due to RFPT "A" decreasing speed to it's "low speed stop" and the "B" RFPT increasing speed toward it's "high speed stop".

C. DECREASE initially and STABILIZE approximately 6" lower due to loss of feed flow input.

D. REMAIN THE SAME due to RFPT "A" defaulting to the speed setter and RFPT "B" controlling level in auto.

Reference: SI-LP-00201-00 Rev. SI-00 Pg. 27 of 47.
Question #LT-LP-002027-0002
EO 002.004.a.08
Minor rewording of question and order of answers.

A. Incorrect since loss of signal results in default level signal being used (37") for the failed controller to the associated RFPT.

B. Incorrect since RFPT with failure does not go to low speed stop and the unaffected RFPT does not go towards the high speed stop.

C. Incorrect since level is maintained by the unaffected RFPT at the normal operating level.

D. Correct answer.

Question # LT-LP-002027-0002 **Objective:** 002.027.A.01

Media # LR-LP-00201-05

The Unit 2 Feedwater Level Control system is in 3 element control with Reactor power at 85% RTP. If a loss of control signal from RFPT "A" M/A controller occurred, RPV water level:

a. Should REMAIN THE SAME due to RFPT "A" decreasing speed to its "low-speed stop" and the "B" RFPT increasing speed toward it's high speed stop .

b. Should INCREASE due to loss of feedflow signal resulting in a steam flow/feedflow mismatch.

c. Should REMAIN THE SAME due to a RFPT 'A' defaulting to the speed setter and RFPT 'B' controlling level in auto.

d. Should DECREASE initially and STABILIZE approximately 6" lower due to loss of feedflow input.

Answer: c (1.0 pt.)

Failure of the **Master Level Controller (2C32-R600)** - if the "RFP 2A" Bias M/A station is in Automatic control, it will maintain RWL in the single element mode. The "B" Bias M/A Station will default to Manual and TMR Mark V Speedsetter control. This setpoint may be adjusted with the set up and down keys. If the "A" Bias M/A Station is in Manual, then the "B" Bias M/A Station will maintain RWL in the single element mode (same as " A" above). **NOTE: This failure is a loss of signal from the controller. If the controller is in the Automatic mode and a signal is present, just downscale (≥ -2.0%), the RFP 2A & 2B Bias M/A Station Controllers will follow the Master Controller and decrease output to 2100 rpm. They remain in the Automatic Mode.** (Same for Unit 1.)

Upon failure of 2R25-S063 (Vital AC), the RFPT 2B will default to TMR Mark V Speedsetter control. The RFPT 2A M/A Station controller, 2C32-R601A will default to Single Element control mode utilizing 37 inches as the default setpoint. Since recirc runs back to Speed Limiter #2 with RFPT 2B in manual speed control, RFPT 2A will back itself out of service. RFPT 2B speed will have to be manually reduced to prevent RFPTs from tripping on high RWL. (Same for Unit 1.)

E. Body Feed System

1. A vessel cannot receive body feed in the automatic sequencing mode unless its "OMIT-AUTO-MAN" selector switch is in the "AUTO" position.

2. A vessel will not receive body feed in the automatic mode if its condensate flow is low or off line.

3. The metering pump, circulating pump or mixer will not run if the Body Feed Storage Tank Low/Low Level switch is activated.

4. A Body Feed Tank fill cannot occur unless the Low/Low Level switch has been activated.

5. The Common Bypass Valve's "OMIT-AUTO-MAN" selector switch must be in the "AUTO" position to allow automatic operation.

VI. Integrated System Response

A. Short Cycle Cleanup

1. Short cycle cleanup lineup is initially used prior to placing system is long cycle cleanup.

LT-LP-00201-03

CONDENSATE FEEDWATER SYSTEM

ENABLING OBJECTIVES

1. STATE the purpose of the Reactor Feedwater System. (002.004.c.01)

2. From a list of plant conditions, SELECT the conditions that must exist prior to placing RFP Seal Water in service. (002.004.a.03)

3. From a list of conditions, SELECT the conditions that result in an auto start of the Condensate Pumps. (026.003.a.04)

4. From a list of conditions, SELECT the conditions which results in a Condensate Pump trip. (026.002.a.03)

5. From a list of conditions, SELECT the conditions that result in an auto start of the Condensate Booster Pumps. (026.003.a.05)

6. From a list of conditions, SELECT the conditions which results in a Condensate Booster Pump trip. (026.002.a.04)

7. From a list of conditions, SELECT the conditions which results in a Reactor Feed Pump trip. (026.002.a.05)

8. From a list of plant conditions, SELECT the indications which would indicate a RFPT is in the tripped condition. (002.006.a.03)

9. From a list of statements, SELECT the statements that describes the operation of the Condensate System in Short Cycle Cleanup. (026.030.a.01)

10. From a list of statements, SELECT the statement that describes the operation of the Condensate System in Long Cycle Cleanup. (026.029.a.01)

11. From a list of plant conditions, DETERMINE which conditions which require the RFPT to be placed on the Turning Gear. (002.004.a.02)

12. Evaluate the effect of the HP or LP Stop valve for the RFPT at various Plant conditions. (002.004.a.07)

13. Given Plant conditions, DETERMINE whether the Speed Setter or M/A Station is controlling RFPT speed. (002.004.a.08)

5. 261000K4.01 001

The following Unit 1 reactor zone exhaust ventilation radiation levels exist:

1D11-K609A	12 mR/hr
1D11-K609B	14 mR/hr
1D11-K609C	10 mR/hr
1D11-K609D	11 mR/hr

Which ONE of the following reflects the plant response to the above conditions?

A. Unit 1 and 2 Refueling Floor and Reactor Building supply and exhaust fans trip and isolate and Unit 1 and 2 SBGT starts and aligns to the Reactor Building and Refueling Floor.

B. Unit 1 Refueling Floor and Reactor Building supply and exhaust fans trip and isolate and Unit 1 SBGT starts and aligns to the Reactor Building and Refueling Floor.

C. Unit 1 and 2 Reactor Building supply and exhaust fans trip and isolate and Unit 1 and 2 SBGT starts and aligns to the Reactor Building only.

D. Unit 1 and 2 Reactor Building and Refueling Floor ventilation systems remain in operation and neither SBGT fan starts.

Reference: SI-LP-01302-00 Rev. SI-0 Pg. 16 of 21
Question # LR-LP-200023-0001
EO 013.031.a.05, 013.038.a.08

A. Incorrect since none of these instruments are reading >18 mR/hr so nothing will automatically cause fans to trip and isolate and SBGT to start for both units.

B. Incorrect since both units are affected by any of these instruments reading >18 mR/hr.

C. Incorrect since the Refuel Floor fans and dampers would be affected by these signals if the threshold wee met.

D. Correct answer. None of the instrument readings meet the threshold for actuating the Reactor Building and Refueling Floor vents and starting SBGT (K609 A-D reading >18 mR/hr for Unit 1).

Modified the initial conditions so that the student must realize that the threshold has not been met to cause initiations since the readings are for Unit 1. If the readings were for Unit 2 then the initiations would occur.

QUESTIONS REPORT
for Revision3HT2002

RO Tier:	T2G1	SRO Tier:	T2G1
Keyword:	SBGT	Cog Level:	C/A 3.7/3.8
Source:	M	Exam:	HT02301
Test:	C	Misc:	TCK

43. 261000K4.01 001

The following reactor zone exhaust ventilation radiation levels exist:

1D11-K609A	12 mR/hr
1D11-K609B	14 mR/hr
1D11-K609C	10 mR/hr
1D11-K609D	11 mR/hr

Which ONE of the following reflects the plant response to the above conditions?

A. Unit 1 and 2 Refueling Floor and Reactor Building supply and exhaust fans trip and isolate and Unit 1 and 2 SBGT starts and aligns to the Reactor Building and Refueling Floor.

B. Unit 1 Refueling Floor and Reactor Building supply and exhaust fans trip and isolate and Unit 1 SBGT starts and aligns to the Reactor Building and Refueling Floor.

C. Unit 1 and 2 Reactor Building supply and exhaust fans trip and isolate and Unit 1 and 2 SBGT starts and aligns to the Reactor Building only.

D. Unit 1 and 2 Reactor Building and Refueling Floor ventilation systems remain in operation and neither SBGT fan starts.

Reference: SI-LP-01302-00 Rev. SI-0 Pg. 16 of 21
Question # LR-LP-200023-0001
EO 013.031.a.05, 013.038.a.08

A. Incorrect since none of these instruments are reading >18 mR/hr so nothing will automatically cause fans to trip and isolate and SBGT to start for both units.

B. Incorrect since both units are affected by any of these instruments reading >18 mR/hr.

C. Incorrect since the Refuel Floor fans and dampers would be affected by these signals if the threshold wee met.

D. Correct answer. None of the instrument readings meet the threshold for actuating the Reactor Building and Refueling Floor vents and starting SBGT (K609 A-D reading >18 mR/hr for Unit 1).

Modified the initial conditions so that the student must realize that the threshold has not been met to cause initiations since the readings are for Unit 1. If the readings were for Unit 2 then the initiations would occur.

QUESTIONS REPORT
for HT2002

RO Tier:	T2G1	SRO Tier:	T2G1
Keyword:	SBGT	Cog Level:	C/A 3.7/3.8
Source:	M	Exam:	HT02301
Test:	C	Misc:	TCK

QUESTIONS REPORT
for HT2002

1. 261000K4.01 001

The following reactor zone exhaust ventilation radiation levels exist:

1D11-K609A	12 mR/hr
1D11-K609B	14 mR/hr
1D11-K609C	10 mR/hr
1D11-K609D	11 mR/hr

Select the statement that reflects the plant response to the above conditions.

A. Unit 1 and 2 Refueling Floor and Reactor Building supply and exhaust fans trip and isolate and Unit 1 and 2 SBGT starts and aligns to the Reactor Building and Refueling Floor.

B. Unit 1 Refueling Floor and Reactor Building supply and exhaust fans trip and isolate and Unit 1 SBGT starts and aligns to the Reactor Building and Refueling Floor.

C. Unit 1 and 2 Reactor Building supply and exhaust fans trip and isolate and Unit 1 and 2 SBGT starts and aligns to the Reactor Building only.

D. Unit 1 and 2 Reactor Building and Refueling Floor ventilation systems remain in operation and neither SBGT fan starts.

Reference: SI-LP-01302-00 Rev. SI-0 Pg. 16 of 21
Question # LR-LP-200023-0001
EO 013.031.a.05, 013.038.a.08

A. Incorrect since none of these instruments are reading >18 mR/hr so nothing will automatically cause fans to trip and isolate and SBGT to start for both units.

B. Incorrect since both units are affected by any of these instruments reading >18 mR/hr.

C. Incorrect since the Refuel Floor fans and dampers would be affected by these signals if the threshold wee met.

D. Correct answer. None of the instrument readings meet the threshold for actuating the Reactor Building and Refueling Floor vents and starting SBGT (K609 A-D reading >18 mR/hr for Unit 1).

Modified the initial conditions so that the student must realize that the threshold has not been met to cause initiations since the readings are for Unit 1. If the readings were for Unit 2 then the initiations would occur.

3) Unit 1 reactor water level < -35 inches

4) Unit 2 reactor water level < -35 inches

5) Unit 1 reactor zone exhaust ventilation radiation level > 18 mr/hr on K609 A-D.

6) Unit 2 reactor zone exhaust ventilation radiation level > 9.5 mr/hr on K609 A-D.

7) Unit 1 refueling zone exhaust ventilation radiation level > 18 mr/hr on K611 A-D.

8) Unit 2 refueling zone exhaust ventilation radiation level > 15 mr/hr on K611 A-D.

9) Unit 2 refueling zone exhaust ventilation radiation level > 6.9 mr/hr on K634 A-D.

10) Unit 2 refueling zone exhaust ventilation radiation level > 5.7 mr/hr on K635 A-D.

b. An isolation signal will cause the following automatic actions:

1) The supply and exhaust fans trip, and the ventilation dampers close for the:

a) Unit 1 reactor building Zone I

b) Unit 2 reactor building Zone II

c) Unit 1 & 2 refueling floor Zone III

2) The Unit 1 SBGT system will start and take a suction on both the Unit 1 reactor building and the refueling floor.

3) The Unit 2 SBGT system will start and take a suction on both the Unit 2 reactor building and the refueling floor.

2. Manual Isolation

a. In the event that an automatic isolation does not occur when required, the operator must manually isolate secondary containment and start the SBGT system.

9. Given a list of statements, IDENTIFY the statement which best describes the basic operation of the secondary containment isolation system. (013.031.a.04, 013.038.a.07)

10. Given a list of statements, IDENTIFY the statement which best describes the physical arrangement and function of the reactor building radiation shielding. (200.023.b.10)

11. Given a list of statements, IDENTIFY the statement which best describes the plant conditions when secondary containment integrity is required. (200.023.b.13)

12. Given a list of statements, IDENTIFY the statement which best describes secondary containment integrity. (200.023.b.14)

13. Given plant conditions, IDENTIFY which of the following modes of Secondary Containment is in effect. (200.023.b.11)

    a. Type A
    b. Type B1
    c. Type B2
    d. Type C

14. Given a list of statements, IDENTIFY the statement which best describes the plant conditions which will generate the following secondary containment isolation signals: (013.031.a.05, 013.038.a.08)

    a. Unit 1 Reactor Building Zone isolation
    b. Unit 1& 2 Refueling Zone isolation
    c. Unit 2 Reactor Building Zone isolation

Question # LR-LP-200023-0001 **Objective:** 200.023.B.04

Media # LR-LP-01302-04

The operator reports the following conditions:

2D11-K609A	12 mr/hr
2D11-K609B	14 mr/hr
2D11-K609C	10 mr/hr
2D11-K609D	11 mr/hr

SELECT the statement that reflects the plant response to the above conditions. (CHOOSE ONE)

a. The Refueling Floor and Reactor Building supply and exhaust fans trip and isolate and SBGT starts aligns to the Reactor Building and Refueling Floor.

b. The Refueling Floor supply and exhaust fans trip and isolate and SBGT starts and aligns to the Refueling Floor only.

c. The Reactor Building supply and exhaust fans trip and isolate and SBGT starts and aligns to the Reactor Building only.

d. The Reactor Building and Refueling Floor ventilation systems remain in operation and neither SBGT fan starts.

Answer: a. (1.00 pt)

6. 262001A4.02 001

Which ONE of the following states how to adjust main generator output voltage and the consequences of improperly setting the main generator output voltage with respect to system voltage during manual synchronization?

A. Adjust the generator output voltage using the Auto Voltage Adjust control switch and if generator output voltage is greater than system voltage then Reactive load will be positive.

B. Adjust the generator output voltage using the Manual Voltage Adjust control switch and if generator output voltage is less than system voltage then Reactive load will be negative.

C. Adjust the generator output voltage using the Auto Voltage Adjust control switch and if generator output voltage is less than system voltage then Reactive load will be positive.

D. Adjust the generator output voltage using the Manual Voltage Adjust control switch and if generator output voltage is greater than system voltage then Reactive load will be negative.

References: INPO 2001 Exam Bank (question 262001.A4.0 155)
34SO-N40-001-2S, Main Generator Operation Rev. 10.5, pg 13 - 16 of 53.

A. Correct answer.

B. Incorrect answer since you have to use the Auto Voltage Adjust control switch to match voltages.

C. Incorrect since the VAR flow will be from the system to the generator.

D. Incorrect since the VAR flow will be from the generator to the system and you use the Auto Voltage Adjust control switch to match voltages.

RO Tier:	T2G2	SRO Tier:	T2G1
Keyword:	MAIN GENERATOR	Cog Level:	C/A 3.4/3.4
Source:	M	Exam:	HT02301
Test:	C	Misc:	TCK

8. 262001A4.02 001

Which ONE of the following states how to adjust generator output voltage and the consequences of improperly setting the generator output voltage with respect to system voltage during manual synchronization?

A. Adjust the generator output voltage using the Auto Voltage Adjust control switch and if generator output voltage is greater than system voltage then Reactive load will be positive.

B. Adjust the generator output voltage using the Manual Voltage Adjust control switch and if generator output voltage is less than system voltage then Reactive load will be negative.

C. Adjust the generator output voltage using the Auto Voltage Adjust control switch and if generator output voltage is less than system voltage then Reactive load will be positive.

D. Adjust the generator output voltage using the Manual Voltage Adjust control switch and if generator output voltage is greater than system voltage then Reactive load will be negative.

References: INPO 2001 Exam Bank (question 262001.A4.0 155)
34SO-N40-001-2S, Main Generator Operation Rev. 10.5, pg 13 - 16 of 53.

A. Correct answer.

B. Incorrect answer since you have to use the Auto Voltage Adjust control switch to match voltages.

C. Incorrect since the VAR flow will be from the system to the generator.

D. Incorrect since the VAR flow will be from the generator to the system and you use the Auto Voltage Adjust control switch to match voltages.

RO Tier:	T2G2	SRO Tier:	T2G1
Keyword:	MAIN GENERATOR	Cog Level:	C/A 3.4/3.4
Source:	M	Exam:	HT02301
Test:	C	Misc:	TCK

44. 262001A4.02 001

Which ONE of the following states how to adjust generator output voltage and the consequences of improperly setting the generator output voltage with respect to system voltage during manual synchronization?

A. Adjust the generator output voltage using the Auto Voltage Adjust control switch and if generator output voltage is greater than system voltage then a VAR flow will occur from the generator to the system.

B. Adjust the generator output voltage using the Manual Voltage Adjust control switch and if generator output voltage is less than system voltage then a VAR flow will occur from the system to the generator.

C. Adjust the generator output voltage using the Auto Voltage Adjust control switch and if generator output voltage is less than system voltage then a VAR flow will occur from the generator to the system.

D. Adjust the generator output voltage using the Manual Voltage Adjust control switch and if generator output voltage is greater than system voltage then a VAR flow will occur from the system to the generator.

References: INPO 2001 Exam Bank (question 262001.A4.0 155)
34SO-N40-001-2S, Main Generator Operation Rev. 10.5, pg 13 - 16 of 53.

A. Correct answer.

B. Incorrect answer since you have to use the Auto Voltage Adjust control switch to match voltages.

C. Incorrect since the VAR flow will be from the system to the generator.

D. Incorrect since the VAR flow will be from the generator to the system and you use the Auto Voltage Adjust control switch to match voltages.

RO Tier:	T2G2	SRO Tier:	T2G1
Keyword:	MAIN GENERATOR	Cog Level:	C/A 3.4/3.4
Source:	M	Exam:	HT02301
Test:	C	Misc:	TCK

QUESTIONS REPORT
for HT2002

1. 262001A4.02 001

Which of the following states how to adjust generator output voltage and the consequences of improperly setting the generator output voltage with respect to system voltage during manual synchronization?

A. Adjust the generator output voltage using the Auto Voltage Adjust control switch and if generator output voltage is greater than system voltage then a VAR flow will occur from the generator to the system.

B. Adjust the generator output voltage using the Manual Voltage Adjust control switch and if generator output voltage is less than system voltage then a VAR flow will occur from the system to the generator.

C. Adjust the generator output voltage using the Auto Voltage Adjust control switch and if generator output voltage is greater than system voltage then the generator will accelerate to increase voltage to match the system voltage.

D. Adjust the generator output voltage using the Manual Voltage Adjust control switch and if generator output voltage is less than system voltage then the generator will reduce speed to decrease voltage to match the system voltage.

References: INPO 2001 Exam Bank (question 262001.A4.0 155)
34SO-N40-001-2S, Main Generator Operation Rev. 10.5, pg 13 - 16 of 53.

A. Correct answer.

B. Incorrect answer since you have to use the Auto Voltage Adjust control switch to match voltages.

C. Incorrect since the generator will not change speed to match voltages.

D. Incorrect since the generator will not change speed to match voltages and you use the Auto Voltage Adjust control switch to match voltages.

QUESTIONS REPORT
for INPO 2001 Questions

1. 262001.A4.0 155

Which of the following states the consequences of improperly setting the generator output voltage with respect to system voltage during manual synchronization?

A. If generator output voltage is less than system voltage, a VAR flow will occur

B. If generator output voltage is greater than system voltage, a VAR flow will occur from the system to the generator.

C. If generator output voltage is less than system voltage, the generator will accelerate to increase voltage to match the system voltage.

D. If generator output voltage is greater than system voltage, the generator will reduce speed to reduce voltage to match the system voltage.

7.1.3 Generator Synchronization

CONTINUOUS

7.1.3.1 Synchronize the generator with the grid using either Manual Synchronization OR Automatic Synchronization.

7.1.3.2 Manual Synchronization

7.1.3.2.1 PLACE the Auto SSW in the MAN position.

7.1.3.2.2 PLACE the PCB 179740 SSW OR the PCB 179750 SSW in the ON position.

NOTE

IF PCB 179750 was selected as the first breaker to be closed, voltage comparison will be made using the Syn (Generator) position and the 500KV Bus 1 position of the Generator Voltmeter Selector Switch. IF PCB 179740 was selected, the voltage comparison will be made using the Syn (Generator) position and the 500KV Bonaire Line position.

7.1.3.2.3 ADJUST the Auto Volt Adjust control switch, to match voltage between the generator (Syn position) and the selected bus (Bus 1 OR Bonaire position), as indicated on the Generator/GRID Voltmeter.

7.1.3.2.4 IF necessary, re-null the Exciter Xfmr Voltmeter using the Manual Volt Adjust control switch.

7.1.3.2.5 ADJUST the Main Turbine speed, using the Load Selector Increase/Decrease pushbuttons to establish a slow (approximately 4 RPM) clockwise rotation of the synchroscope.

7.1.3.2.6 Confirm that generator voltage AND the selected bus voltage, as indicated on the Generator/GRID Voltmeter, are still matched.
Adjust, IF necessary, using the Auto Volt Adjust control switch.

NOTE

WHEN closing a breaker to tie the generator to another AC power source the breaker control switch is to be taken to the CLOSE position WHEN the Synchroscope hand points to a position which would approximate 2 minutes before 12 on a clock face. Both Synchroscope lights will be EXTINGUISHED.

7.1.3.2.7 With the Synchroscope turning slowly in the clockwise (fast) direction, CLOSE the selected breaker, PCB 179740 OR PCB 179750, WHEN the hand points to the 2 minutes before 12 position.

7.1.3.2.8 Confirm that the breaker has closed by observing that the red breaker indicating light is ILLUMINATED AND the Synchroscope hand is STOPPED at approximately the 12:00 o'clock position.

7.1.3.2.9 Proceed immediately to step 7.1.3.4.

7.1.3.3 Automatic Synchronization

CONTINUOUS

7.1.3.3.1 PLACE the Auto SSW in the 740 OR 750 position.

7.1.3.3.2 PLACE the PCB 179740 SSW OR the PCB 179750 SSW in the ON position.

NOTE

IF PCB 179750 was selected as the first breaker to be closed, voltage comparison will be made using the Syn (generator) position and the 500KV Bus 1 position of the Generator Voltmeter selector switch. IF PCB 179740 was selected, the voltage comparison will be made using the Syn (generator) position and the 500KV North Tifton Line position.

7.1.3.3.3 ADJUST the Auto Volt Adjust control switch to match voltage between the generator (Syn position) and the selected bus (Bus 1 OR North Tifton position), as indicated on the Generator/GRID Voltmeter.

7.1.3.3.4 IF necessary, re-null the Exciter Xfmr Voltmeter using the Manual Volt Adjust control switch.

NOTE

In the following step, rotation of the Synchroscope must be fast enough to cause the red Auto Synch Permissive light to ILLUMINATE.

7.1.3.3.5 ADJUST the Main Turbine speed, using the Load Selector Increase/Decrease pushbuttons to establish a slow clockwise rotation of the synchroscope.

7.1.3.3.6 Confirm that generator voltage AND the selected bus voltage, as indicated on the Generator/GRID Voltmeter, are still matched. Adjust, IF necessary, using the Auto Volt Adjust control switch.

7.1.3.3.7 With the synchroscope turning slowly in the clockwise (fast) direction, note the position at which the red Auto Synch Permissive light ILLUMINATES.

NOTE

The Auto Synch pushbutton must NOT be depressed at any time other than WITHIN approximately 10 degrees before the red Auto Synch Permissive light ILLUMINATES. 10 degrees equals approximately 2 minutes on a clock face.

7.1.3.3.8 WHEN the synchroscope points to approximately 10 degrees before the position where the red Auto Synch Permissive light ILLUMINATES, DEPRESS the Auto Synch pushbutton for the PCB being closed.

7.1.3.3.9 RELEASE the Auto Synch pushbutton WHEN the breaker closes OR IF the synchroscope passes the 12:00 o'clock position.

7.1.3.3.10 Confirm that the breaker has closed by observing that the red breaker indicating light is ILLUMINATED AND the Synchroscope hand is STOPPED at approximately the 12:00 o'clock position.

7.1.3.4 Immediately increase load to 40 MWe, as indicated on the Generator Megawatt meter using the Main Turbine Load Selector Pushbuttons and then to 120 MWe in accordance with 34SO-N30-001-2S, Main Turbine Operation.

NOTE

Subsequent load increases are NOT to exceed 10 MWe/minute.

7.1.3.5 ADJUST generator reactive load, as indicated on the Generator Megavar meter for zero megavars using the Auto Volt Adjust control switch.

7.1.3.6 PLACE the Auto SSW in MAN position.

7.1.3.7 PLACE the SSW for the breaker just closed, PCB 179740 OR PCB 179750, in the OFF position.

7.1.3.8 PLACE the SSW for the open breaker, PCB 179740 OR 179750, in the ON position.

7.1.3.9 Confirm that the synchroscope hand is pointing near the 12:00 o'clock position.

7.1.3.10 CLOSE the open breaker, PCB 179740 OR PCB 179750.

7.1.3.11 PLACE the SSW for the breaker just closed, PCB 179740 OR PCB 179750, in the OFF position.

7.1.3.12 CONFIRM OR PLACE the Auto SSW in the MAN position.

7.1.3.13 Notify the Load Dispatcher that the generator is on the line.

9. 263000K3.01 001

Unit 2 is operating at 50% RTP when the following annunciators alarm:

ARI OUT OF SERVICE
LOSS OF OFF SITE POWER
4160V BUS 2E or 600v BUS 2C DC OFF
125/250V BATT VOLTS LOW OR FUSE TROUBLE
125/250V BATT CHGR MALFUNCTION

The Control Board Operator verifies that 125VDC Cabinet 2D has been lost.

Which ONE of the following describes the impact on the Diesel Generators that supply Unit 2 Buses?

A. 2A Diesel Generator is INOPERABLE due to loss of auto start capability.

B. 2C Diesel Generator is INOPERABLE due to loss of auto start capability.

C. 2A and 2C Diesel Generators are INOPERABLE due to loss of auto start capability.

D. 1B Diesel Generator is INOPERABLE to Unit 2 due to loss of auto start capability to Unit 2.

References: 34AB-R22-001-2S, Loss of DC Buses Rev. 2.3 pg 17,18, and 59 of 66.

A. Correct answer.

B. Incorrect since the 2C Diesel Generator is unaffected by this loss.

C. Incorrect since the 2C Diesel Generator is unaffected by this loss.

D. Incorrect since the 1B Diesel Generator is unaffected by this loss.

RO Tier:	T2G2	SRO Tier:	T2G2
Keyword:	125VDC	Cog Level:	MEM 3.4/3.8
Source:	N	Exam:	HT02301
Test:	C	Misc:	TCK

45. 263000K3.01 001

Unit 2 is operating at 50% RTP when the following annunciators alarm:

ARI OUT OF SERVICE
LOSS OF OFF SITE POWER
4160V BUS 2E or 600v BUS 2C DC OFF
BATTERY VOLTS LOW or FUSE TROUBLE
BATTERY CHARGER MALFUNCTION

The Control Board Operator verifies that 125VDC Cabinet 2D has been lost.

Which ONE of the following describes the impact on the Diesel Generators that supply Unit 2 Buses?

A. 2A Diesel Generator is INOPERABLE due to loss of auto start capability.

B. 2C Diesel Generator is INOPERABLE due to loss of auto start capability.

C. 2A and 2C Diesel Generators are INOPERABLE due to loss of auto start capability.

D. 1B Diesel Generator is INOPERABLE to Unit 2 due to loss of auto start capability to Unit 2.

References: 34AB-R22-001-2S, Loss of DC Buses Rev. 2.3 pg 17,18, and 59 of 66.

A. Correct answer.

B. Incorrect since the 2C Diesel Generator is unaffected by this loss.

C. Incorrect since the 2C Diesel Generator is unaffected by this loss.

D. Incorrect since the 1B Diesel Generator is unaffected by this loss.

RO Tier:	T2G2	SRO Tier:	T2G2
Keyword:	125VDC	Cog Level:	MEM 3.4/3.8
Source:	N	Exam:	HT02301
Test:	C	Misc:	TCK

QUESTIONS REPORT
for HT2002

1. 263000K3.01 001

Unit 2 is operating at 50% RTP when the following annunciators alarm:

ARI OUT OF SERVICE
LOSS OF OFF SITE POWER
4160V BUS 2E or 600v BUS 2C DC OFF
BATTERY VOLTS LOW or FUSE TROUBLE
BATTERY CHARGER MALFUNCTION

The Control Board Operator verifies that 125VDC Cabinet 2D has been lost. What impact does this have on the Diesel Generators that supply Unit 2 Buses?

A. 2A Diesel Generator is INOPERABLE due to loss of auto start capability.

B. 2C Diesel Generator is INOPERABLE due to loss of auto start capability.

C. 2A and 2C Diesel Generators are INOPERABLE due to loss of auto start capability.

D. 1B Diesel Generator is INOPERABLE to Unit 2 due to loss of auto start capability to Unit 2.

References: 34AB-R22-001-2S, Loss of DC Buses Rev. 2.3 pg 17,18, and 59 of 66.

A. Correct answer.

B. Incorrect since the 2C Diesel Generator is unaffected by this loss.

C. Incorrect since the 2C Diesel Generator is unaffected by this loss.

D. Incorrect since the 1B Diesel Generator is unaffected by this loss.

VI. LOSS OF 125V DC CABINET 2D, 2R25-S004

1.0 CONDITIONS

1.1 ANNUNCIATORS

- 4160V BUS 2E or 600V BUS 2C DC OFF, 652-115
- BATTERY VOLTS LOW OR FUSE TROUBLE, 652-119
- BATTERY CHARGER MALFUNCTION, 652-120
- RHR PUMP D TRIP, 601-301 (IF pump was running after Manual Start)
- RHR SERV WTR PUMP C TRIP, 601-325 (IF pump was running after Manual Start)
- 4160V STA. SERV. FEEDER BKR. TRIPPED, 650-137 (IF PSW pump 2C was running)
- ARI OUT OF SERVICE, 603-305
- LOSS OF OFF SITE POWER, 652-102

1.2 Loss of power to equipment listed on Attachment 12.

1.3 Loss of breaker position indicating lights on 4160V Swgr 2E and Div I breakers on 4160V Swgr 2F.

2.0 AUTOMATIC ACTIONS

4160V Swgr 2F Frames 4, 5 and 8 Trip (RHR SW 2C, PSW 2C and RHR 2D pumps)

3.0 IMMEDIATE OPERATOR ACTIONS

None

4.0 SUBSEQUENT OPERATOR ACTIONS

NOTES

-Diesel 2A will be INOP due to Loss of Auto start ability.

-Without DC control power, breakers on the 4160V Bus 2E can only be tripped manually at the breaker.

-IF the main generator PCB's open, 4160V Buses 2A, 2B, 2C, 2D will NOT auto transfer to the startup supply.

CAUTIONS

-IF 4.16Kv BUS 2E IS DEENERGIZED AND 2C DIESEL GENERATOR IS SUPPLYING 4.16Kv BUS 2G, THEN TO ENSURE ACCEPTABLE DIESEL GENERATOR LOADING CRITERIA, IT IS RECOMMENDED THAT ONLY ONE RHRSW PUMP BE OPERATED ON THE 4.16Kv BUS 2G. RHRSW PUMP 2B IS PREFERRED OVER RHRSW PUMP 2D.

-IF 4.16Kv BUS 2E IS DEENERGIZED AND 4.16 Kv BUSES 2F AND 2G ARE BEING SUPPLIED ONLY BY THEIR RESPECTIVE DIESEL GENERATOR, THEN TO ENSURE ACCEPTABLE DIESEL GENERATOR LOADING CRITERIA, THE FOLLOWING LOAD OPTIONS ARE RECOMMENDED:

- OPERATE PSW PUMP 2B IN LIEU OF PSW PUMP 2D
- OPERATE RHR PUMP 2D IN LIEU OF RHR PUMP 2B

4.1 Attempt to restore power to Cabinet 2D, 2R25-S004.

4.1.1 IF the BATTERY LOW VOLTS OR FUSE TROUBLE (652-119) alarm is in, perform the following:

4.1.1.1 Confirm/CLOSE Battery Charger Feed, Breaker 29 in Cabinet 2D, 2R25-S004.

4.1.1.2 Check IF battery voltage is below 117V DC on DC Volts indicator 2R42-R606 on panel 2H11-P652.

4.1.1.3 Check to see IF battery charger 2R42-S032A is in service as follows:

- AC input switch is ON.
- DC output switch is ON.
- AC input light is ILLUMINATED. IF NOT check battery charger power supply, 600/208V MCC 2A, 2R24-S025 Breaker 1CR.
- Throwover switch 2R26-M032A is UP for charger 2R42-S032A OR DOWN for charger 2R42-S032D.
- Float and equalizing voltage set per nameplate data.
- Greater than 125V DC reading on charger voltmeter.
- Greater than 1 amp reading on charger ammeter.

4.1.1.4 Check battery ammeter 2R42-R102 for short circuit (greater than 200 amp reading).

4.1.1.5 Check battery 2A fuse box 2H21-P291, replace fuses as necessary.

4.1.1.6 IF battery voltage is still low and charging rate on ammeter 2R42-R101 is NOT 90 to 100 amps place portable battery charger 2R42-S032D in service, if available. (Power to 2R42-S032D Receptacle is MCC 2A, 2R24-S025, Breaker 1BR.)

4.2 IF power cannot be restored to Cabinet 2D, perform the following:

4.2.1 Manually TRIP all breakers on Cabinet 2D.

4.2.2 CLOSE Breaker 29 on Cabinet 2D.

4.2.3 Attempt to re-energize Cabinet 2D by repeating appropriate substeps in step 4.1.

4.2.4 IF Cabinet 2D re-energizes, ADD all loads one at a time.

4.2.5 IF one of the loads trip it's individual breaker OR trips the power to Cabinet 2D, perform the following:

4.2.5.1 IF the loads individual breaker tripped, leave it in the OPEN position.

4.2.5.2 IF the load removes power to Cabinet 2D, repeat steps 4.2.1 thru 4.2.4, but leave the breaker which caused the power trip in the OPEN position.

4.3 Take actions per appropriate Technical Specifications.

5.0 REFERENCES

TITLE: 125V DC BATTERY CAB. 2D, 2R25-S004

BREAKER	FUNCTION
1.	4160V Bus 2E Bkr. Control pwr. (2R22-S005 Fr 5)
2.	D/G 2A Field Flashing (2R43-P001A)
3.	4160V Bus 2E Bkr. 135554 Control pwr. (2R22-S005 Fr 1)
4.	D/G 2A Relaying (2H21-P200)
5.	4160V Bus 2E Bkr. 135544 Control pwr. (2R22-S005 Fr 10)
6.	D/G 2A Start Control Ckt. A (2R43-S001A-RT)
7.	D/G 2A Bkr. 135530 Control pwr. (2R22-S005 Fr 6)
8.	Emerg. Sta. Ser. Relaying (2H21-P200)
9.	Annun. D/G 2A (2R43-P001A)
10.	D/G 2A Shutdown Control (2R43-S001A-RT)
11.	Spare
12.	Spare
13.	4160V Bus 2E Loading timer (2H21-P230)
14.	Governor Control (2R42-S001A-RT)
15.	D/G 2A Man. volt - adjust (2R43-P001A)
16.	D/G 2A Control (2H21-P230)
17.	Regulator transfer (2H21-P230)
18.	D/G 2A Start Control ckt. B (2R43-S001A-RT)
19.	Anti parallel relay (2H21-P230)
20.	D/G 2A Auto volt - Adjust (2R43-P001A)
21.	DC Emerg. Ltg.
22.	D/G 2A Coolant S.V. (2R43-S001A-RT)
23.	4160V Test Cab. for Bus 2E (2R22-S024B)
24.	M.O.V. Emerg. relaying (2H21-P255)
25.	Serv. water to D/G Lo. Flow (2H21-P255)
26.	ARI Logic
27.	D/G 2A Relay pnl. (2H21-P230)
28.	ARI Logic
29.	Batt. chgr. 2G (2H21-P198)
30.	4160V Bus 2F Div. I cont. (2R22-S006 Fr 4)
31.	Space
32.	Space

10. 268000A1.01 001

The Unit 2 Radwaste Operator is in the process of discharging the Chemical Waste Sample Tank 2B to the discharge canal at 65 gpm, when the discharge radiation monitor exceeds the HIGH trip setpoint.

Which ONE of the following describes ALL of the expected actions for this condition?

A. The Radwaste Effluent High Radiation alarm will annunciate.

B. The Radwaste Effluent High Radiation alarm will annunciate and the dilution flow line will isolate.

C. The Radwaste Effluent High Radiation alarm will annunciate and the High Flow canal discharge line will isolate.

D. The Radwaste Effluent High Radiation alarm will annunciate and the High and Low Flow canal discharge lines will isolate.

Reference: LT-LP-02901-02 Rev. 02 pg 36 of 46.
34AR-601-401-2S Rev. 0.2

A. Incorrect since the high discharge trip setpoint will also auto close the high and low canal discharge lines.

B. Incorrect since the high discharge trip setpoint will auto close the high and low canal discharge lines but do not affect the dilution flow line.

C. Incorrect since the high discharge trip setpoint will also auto close the low canal discharge line.

D. Correct answer.

RO Tier:	T2G3	SRO Tier:	T2G3
Keyword:	RADWASTE	Cog Level:	MEM 2.7/3.1
Source:	B	Exam:	HT02301
Test:	C	Misc:	TCK

49. 268000A1.01 001

The Unit 2 Radwaste Operator is in the process of discharging the Chemical Waste Sample Tank to the discharge canal at 3.6 gpm, when the discharge radiation monitor exceeds the HIGH trip setpoint.

Which ONE of the following describes ALL of the expected actions for this condition?

A. The Radwaste Effluent High Radiation alarm will annunciate.

B. The Radwaste Effluent High Radiation alarm will annunciate and the dilution flow line will isolate.

C. The Radwaste Effluent High Radiation alarm will annunciate and the High Flow canal discharge line will isolate.

D. The Radwaste Effluent High Radiation alarm will annunciate and the High and Low Flow canal discharge lines will isolate.

Reference: LT-LP-02901-02 Rev. 02 pg 36 of 46.
34AR-601-401-2S Rev. 0.2

A. Incorrect since the high discharge trip setpoint will also auto close the high and low canal discharge lines.

B. Incorrect since the high discharge trip setpoint will auto close the high and low canal discharge lines but do not affect the dilution flow line.

C. Incorrect since the high discharge trip setpoint will also auto close the low canal discharge line.

D. Correct answer.

RO Tier:	T2G3	SRO Tier:	T2G3
Keyword:	RADWASTE	Cog Level:	MEM 2.7/3.1
Source:	B	Exam:	HT02301
Test:	C	Misc:	TCK

QUESTIONS REPORT
for HT2002

1. 268000A1.01 001

The Unit 2 Radwaste Operator is in the process of discharging the Chemical Waste Sample Tank to the discharge canal at 3.6 gpm, when the discharge radiation monitor exceeds the High setpoint. The expected action(s) for this condition is/are:

A. The Radwaste Effluent High Radiation alarm will annunciate.

B. The Radwaste Effluent High Radiation alarm will annunciate and the dilution flow line will isolate.

C. The Radwaste Effluent High Radiation alarm will annunciate and the High Flow canal discharge line will isolate.

D. The Radwaste Effluent High Radiation alarm will annunciate and the High and Low Flow canal discharge lines will isolate.

Reference: LT-LP-02901-02 Rev. 02 pg 36 of 46.
34AR-601-401-2S Rev. 0.2

A. Incorrect since the high discharge trip setpoint will also auto close the high and low canal discharge lines.

B. Incorrect since the high discharge trip setpoint will auto close the high and low canal discharge lines but do not affect the dilution flow line.

C. Incorrect since the high discharge trip setpoint will also auto close the low canal discharge line.

D. Correct answer.

1.0 IDENTIFICATION:

ALARM PANEL 601-4

RADWATE EFFL
RADIATION
HIGH

DEVICE:
2D11-K604

SETPOINT:
As determined by the discharge permit.

2.0 CONDITION:
Radwaste Effluent Radiation exceeds the setpoint.

3.0 CLASSIFICATION:
ENVIRONMENTAL IMPACT

4.0 LOCATION:
2H11-P601 Panel 601-4

5.0 OPERATOR ACTIONS:

5.1 Confirm the annunciator by noting radiation levels on Radiation Recorder 2D11-R001 on Panel 2G11-P001-3 and on Radwaste Effluent Monitor 2D11-K604 on Panel 2H11-P604.

5.2 On Panel 2G11-P001-3, confirm CLOSED or CLOSE High Flow 2G11-F184, and Low Flow 2G11-F185.

5.3 STOP the discharge per the applicable section of 34SO-G11-021-2S, Radwaste Sample Tank Operating Procedure.

5.4 Notify the Shift Supervisor and the Chemistry Foreman.

5.5 WHEN the cause of the trip is corrected, continue the discharge per 34SO-G11-021-2S, Radwaste Sample Tank Operating Procedure.

5.6 Refer to 73EP-EIP-001-0S, Emergency Classification & Initial Actions.

6.0 CAUSES:

6.1 Nonrepresentative sample used for release calculation

6.2 Radioactive Particulate matter in the source tank or discharge piping

6.3 Background monitor change

7.0 REFERENCES:

7.1 H-27622 and H-27628 — Process Radiation Monitoring Sys 2D11 Elementary Diagram

7.2 H-27151 — Radwaste System 2G11A Elementary Diagram

8.0 TECH. SPEC./LCO:

8.1 ODCM CHAPTER 2

APPROVAL:
DEPT. MGR PHW DATE 2-3-94

34AR-601-401-2S
REV. 0 ED 2

Block 19 and 20 When the discharge is completed, record the date on block 19 and the time on block 20.

Block 21 Record the tank level after discharge is complete on block 21.

Block 22 Record the discharge integrator reading after discharge is completed on block 22.

Block 23 Record the Discharge Flow Rate at time of discharge completion on block 23. (Use correction curve)

Block 24 Record, in minutes, the time required to discharge the tank on block 24.

Block 25 Subtract the integrator reading on block 13 from the integrator reading on block 22. The difference is the gallons released and is recorded on block 25. If integrator is inoperable calculate release (gals) by: (initial tank level - final tank level) x gallons 1% tank level.

Block 26 Multiply the dilution flow reading from block 7 by the duration from block 24. The result is the Dilution Total and is recorded on block 26.

Block 27 When the discharge is complete the RWO will return the valve alignment to normal per the restoration section of the attachment used to align the discharge, backwash the Rad Monitor per 34SO-G11-036-1S (34SO-G11-021-2S),and record the rad monitor reading after backwash on block 27.

Block 28 Signature of RWO completing discharge.

Block 29 Notify Unit Shift Supervisor that discharge is complete and initial step completion on block 29.

3. The discharge must be stopped and the discharge line isolated upon occurrence of any of the following:

a. Rad Monitor Reading drops more than 5% below the background reading indicated on the Discharge Permit.

b. Dilution flow decreases below 10,000 gpm.

c. Rad Monitor Reading exceeds the High Radiation trip setpoint.

- **a** or **c** above will cause the Radwaste Effluent High Radiation Alarm to Annunciate.
- **b** or **c** above will auto close the Radwaste Canal Discharge Line Auto-Isolation valves 1(2)G11-F184 and 1(2)G11-F185.

4. Upon occurrence of any of the above (Rad Monitor High Radiation will annunciate on either Units Radwaste Control Panel Alarm Panel, Low Dilution Flow will annunciate on Unit 2 Radwaste Control Panel Alarm panel only) the RWO must take the following actions: (34AR-G11-426-2S, 34AR-G11-410-2S, 34AR-G11-132-1S)

   a. Close High Flow and Low Flow Discharge Line Automatic Isolation valves 1(2)G11-F184 and 1(2)G11-F185.

   b. Confirm annunciation by noting reading on Rad Monitor or Dilution Flow recorder whichever is applicable.

   c. Stop the discharge per applicable section of 34SO-G11-036-1S (34SO-G11-021-2S).

   d. Notify the Unit Shift Supervisor.

   e. Determine and correct the cause of the trip.

   f. When the cause of the trip has been corrected continue the discharge.

QUESTIONS REPORT
for HT2002

1. 272000K2.05 001

Unit 1 is operating at 75% RTP when the "A" RPS MG Set inadvertently trips on undervoltage.

Which ONE of the following radiation monitors is INOPERABLE until RPS "A" is restored?

A. RBCCW discharge monitor.

B. Main Stack Radiation monitor.

C. Offgas pretreat rad monitor.

D. "A" Reactor Building Vent Exhaust monitor.

References: LT-LP-10007 Rev. 04 pg 17-27 of 73.

A. Incorrect since this is powered by 24 VDC Cabinet "B", R25-S016.

B. Incorrect since this is powered by 24 VDC Cabinet "A" and "B".

C. Incorrect since this is powered by their NUMAC monitors which receive power from RPS "B".

D. Correct answer.
Modified stem slightly to give plant conditions and reordered answers.

RO Tier:	T2G2	SRO Tier:	T2G2
Keyword:	RX BLDG VENT	Cog Level:	C/A 2.6/2.9
Source:	B	Exam:	HT02301
Test:	C	Misc:	TCK

QUESTIONS REPORT
for HT2002

1. 272000K2.05 001

Unit 1 is operating at 75% RTP when the "A" RPS MG Set inadvertently trips on undervoltage.

Which ONE of the following radiation monitors is INOPERABLE until RPS "A" is restored?

A. RBCCW discharge monitor.

B. Main Stack Radiation monitor.

C. Offgas pretreat rad monitor.

D. "A" Reactor Building Vent Exhaust monitor.

References: LT-LP-10007 Rev. 04 pg 17-27 of 73.

A. Incorrect since this is powered by 24 VDC Cabinet "B", R25-S016.

B. Incorrect since this is powered by 24 VDC Cabinet "A" and "B".

C. Incorrect since this is powered by their NUMAC monitors which receive power from RPS "B".

D. Correct answer.
Modified stem slightly to give plant conditions and reordered answers.

QUESTIONS REPORT
for HT2002

1. 272000K2.05 001

Unit 1 is operating at 75% RTP when the "A" RPS MG Set inadvertently trips on undervoltage. Choose the process radiation monitor that is INOPERABLE until RPS "A" is restored.

A. RBCCW discharge monitor.

B. Main Stack Radiation monitor.

C. Offgas pretreat rad monitor.

D. "A" Reactor Building Vent Exhaust monitor.

References: LT-LP-10007 Rev. 04 pg 17-27 of 73.

A. Incorrect since this is powered by 24 VDC Cabinet "B", R25-S016.

B. Incorrect since this is powered by 24 VDC Cabinet "A" and "B".

C. Incorrect since this is powered by their NUMAC monitors which receive power from PRS "B".

D. Correct answer.
Modified stem slightly to give plant conditions and reordered answers.

B. System Operation

1. RBCCW and Plant Service Water have no associated trips.

EO 13

2. Liquid Radwaste discharge will isolate on Hi, Inop, Downscale or Low Dilution Flow preventing discharge to the river by shutting G11-F184 and G11-F185.

This isolates Liquid Radwaste prior to the detector.

a. The High radiation level trip is set by using data to determine a reasonable level that is high enough to prevent spurious trips and low enough to prevent any excess radioactive release to the environment.

b. The Downscale/INOP trip is set at 3 cps.

c. The Low Dilution Flow is set at 10,000 gpm.

IX. REACTOR BUILDING VENTILATION RADIATION MONITORING

A. Reactor Building Ventilation Radiation Monitoring System

The Reactor Building Ventilation Radiation Monitoring consists of three systems:

- Reactor Building Exhaust Ventilation Monitoring
- Refuel Floor Exhaust Ventilation Monitoring
- Reactor Building Vent Plenum Radiation Monitoring.

Fig 13

1. Reactor Building Exhaust Ventilation Radiation Monitoring is also called Reactor Building Potentially Contaminated Ventilation Exhaust Radiation Monitoring. This system uses four Geiger-Mueller detectors, one per channel.

a. The detectors are located by the inlet duct for Reactor Building Exhaust Filter Trains.

Fig 21

The display on H11-P606 looks like an Area Radiation Monitor. These instruments are on the bottom of the H11-P606 panel.

b. The RPS buses power the detectors.

1) Channels A and C are powered by RPS Bus "A".

2) Channels B and D are powered by RPS Bus "B".

c. The detector output is displayed on panel H11-P606 indicators (D11-K609 A-D) and two out of the four channels are displayed on a strip chart recorder (D11-R605) on panel H11-P600 in the Control Room.

1) There are two selector switches on panel H11-P600 to control which channels are sent to the strip chart recorder.

2) One selector switch for channels A and B and the other selector switch for channels C and D.

d. The detectors have a Downscale, Hi and Hi-Hi alarms (annunciators) associated with them.

1) The Downscale alarm indicates a loss of power or the instrument channel is out of OPERATE. Its setpoint is .015 mR/hr and only provides an alarm.

2) The Hi alarm is an alarm only and comes from the strip chart recorder.

3) The Hi-Hi alarm generates an actuation signal.

11. 286000A1.01 001

Unit 1 is in a Refueling outage with the 4160 VAC 1E bus tagged out and de-energized for maintenance. A fire is detected resulting in main fire header pressure decreasing.

Which ONE of the following is the expected fire protection system response?

A. The motor driven fire pump starts at 110 psig; the first engine driven pump starts at 100 psig and the second engine driven pump starts at 90 psig.

B. The motor driven fire pump does not start; the first engine driven pump starts at 110 psig and the second engine driven pump starts at 100 psig.

C. The motor driven fire pump does not start; the first engine driven fire pump starts at 110 psig and the second engine driven pump starts at 90 psig.

D. The motor driven fire pump does not start; the first engine driven fire pump starts at 100 psig and the second engine driven pump starts at 90 psig.

References: LT-LP-03601Rev.3 pg 19 and 21

A. Incorrect since motor driven pump does not have electrical power and starting pressures are incorrect.

B. Incorrect since pumps start at different pressures..

C. Incorrect since first engine driven fire pump starts at 100 psig.

D. Correct answer.

RO Tier:	T2G2	SRO Tier:	T2G2
Keyword:	FIRE PROTECTION	Cog Level:	C/A 2.9/3.0
Source:	N	Exam:	HT02301
Test:	C	Misc:	TCK

52. 286000A1.06 001

The Unit 2 Control Building 13 Ton CO_2 storage tank refrigeration unit has just failed. CO_2 tank pressure has started to rise from 300 psig at a rate of 25 psig/hr.

Which ONE of the following states the reason why tank rupture should not be an immediate concern?

A. There is a rupture disc that vents to the control building roof.

B. There are 2 SRV's to protect the tank.

C. The pressure will reach an equilibrium well below the tank rupture point.

D. The system will automatically actuate to the cable spreading room if pressure reaches 363 psig.

References: LT-LP-03601 Rev.03
FSAR section 15.4 pg 6

A. Incorrect since a rupture disc does not exist in the system.

B. Correct answer.

C. Incorrect since the pressure will continue to increase as the CO_2 heats up.

D. Incorrect since the system does not automatically actuate anywhere due to high pressure.

RO Tier:	T2G2	SRO Tier:	T2G2
Keyword:	CARDOX	Cog Level:	MEM 2.9/3.0
Source:	N	Exam:	HT02301
Test:	C	Misc:	TCK

28. 286000A1.06 001

The Unit 2 Control Building 13 Ton CO2 storage tank refrigeration unit has just failed. CO2 tank pressure has started to rise from 300# at a rate of 25#/hr. Choose the reason why tank rupture should not be an immediate concern.

A. There is a rupture disc that vents to the control building roof.

B. There are 2 SRV's to protect the tank.

C. The pressure will reach an equilibrium well below the tank rupture point.

D. The system will automatically dump to the cable spreading room if pressure reaches 263#

References: LT-LP-03601 Rev.03
FSAR section 15.4 pg 6

A. Incorrect since a rupture disc does not exist in the system.

B. Correct answer.

C. Incorrect since the pressure will continue to increase as the CO2 heats up.

D. Incorrect since the system does not automatically dump anywhere due to high pressure.

Fires External to the MCR

The MCR occupies one floor of the control building. The adjacent floors, both above and below, are isolated by fire barriers. The ventilation system for the MCR is isolated from and independent of the ventilation system for the cable spreading room. Cable and other penetrations into the MCR incorporate smoke and fire stops. The fire protection and suppression systems for the adjacent areas are described in the ***FHA.***

A fire external to the MCR might introduce smoke and heat into the MCR through the MCREC system outside air intake. There is no smoke detector in the outside air intake duct. However, upon smoke reaching the MCR, the operator would become aware and would manually isolate the MCR. The MCR remains habitable in the isolation mode for ~ 14 people for at least 50 h, an interval limited by the buildup of carbon dioxide. Therefore, it is extremely improbable that a fire external to the MCR will require evacuation.

Pipe Rupture in the Fire Protection System

The carbon dioxide storage unit, located outside the cable spreading room in the control building at el 147 ft, is designed for a pressure of 363 psi and contains 26,000 lb of CO_2. The total energy released in an isentropic expansion of liquid CO_2 to atmospheric pressure is 3.15×10^8 ft-lb. The working pressure is 300 psi. The storage unit is manufactured and tested in compliance with the ASME Code for Unfired Pressure Vessels. Two SRVs are set at 357 psi. An audible alarm is set to sound at 325 psi. The storage unit is designed to comply with Part 1910 - Occupational Safety and Health Standards.

The storage unit is separated from any safety-related equipment by a walled enclosure, is constructed of steel with a steel outer container and insulation between, and has a minimum shell thickness of 31/32 in. and minimum head thickness of 13/16 in. The design temperature limits are -20°F to 650°F, with a normal operating temperature of 0°F. The unit is hydrostatically tested at 550 psi. Pressure is controlled by a refrigeration unit, and overpressurization is prevented by two SRVs. The possibility of an explosion is not seen since CO_2 is a stable compound. For these reasons, no mechanisms of vessel rupture are postulated, and only a break of the largest line (6 in.) leading from the unit is considered. The calculated overturning moment is 1.7×10^6 in.-lb. Since it would take an overturning moment in excess of 10^7 in.-lb to overturn the unit, it is concluded that a break of the largest line could neither move nor overturn the unit.

A pressure transient analysis was performed for the case of the 6-in. line rupture. The 6-in. line is a 7-ft standpipe that extends to near the bottom of the tank. Following the postulated break, two-phase flow results with a maximum estimated blowdown rate of 500 lb/s. At the pipe exit, it is conservatively estimated that 50% of the liquid CO_2 flashed to gas.

The CO_2 tank room has an estimated free volume of 21,000 ft^3. The limiting structural elements (concrete block walls) have a design basis of 50-lb/ft^2 differential pressure, although these walls are estimated to be capable of withstanding ~ 2 to 4 times the pressure differential. A wall with normally closed fire doors separates the CO_2 tank room from the cable spreading room. Assuming that the blowdown rate is constant until the tank empties, the transient analysis indicated a requirement of 13 ft^2 of vent area out of the CO_2 tank room to limit the differential

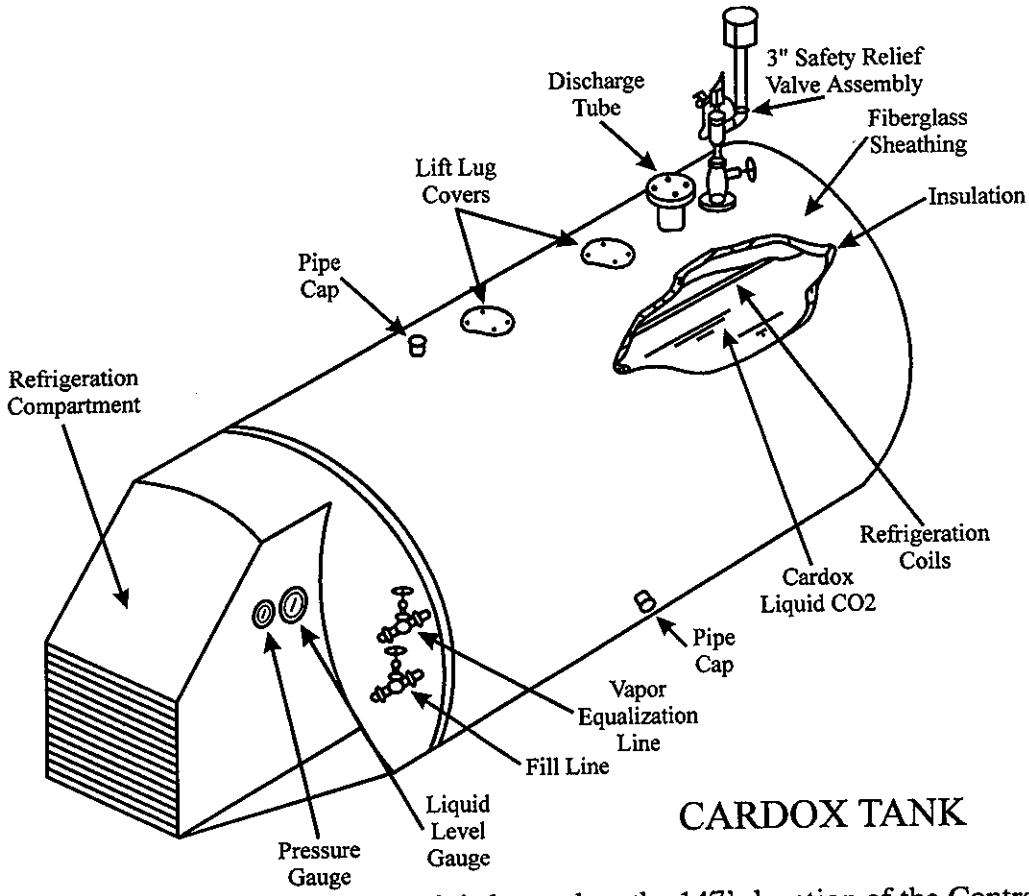

CARDOX TANK

b. The tank is located on the 147' elevation of the Control Building northwest of the Cable Spreading and Computer room entrance.

c. The 13-ton Cardox unit can provide double shot (flooding) protection for the Cable Spreading Room and the Computer Room if a fire occurs in either area. This Cardox unit also supplies the CO_2 through a vaporizer to purge the Main Generator of air or hydrogen.

d. The Cardox unit is pressurized from the tank up to its two Master valves. Master valves control the flow of CO_2 from the storage tank to individual Selector valves. The Selector valves control the actual discharge of CO_2 to the protected area. Master valves exist for the following:

- One for flooding the Computer Room (located on the wall outside the room)
- One for flooding the Cable Spreading Room (located on the wall outside the room)

8. 288000A2.05 001

The weather forcast for the oncoming shift is high winds with the temperature dropping to the low teens. The System Operator (SO) is performing outside rounds and notes that upon entering the 2A D/G room that the temperature is abnormally cold.

Which ONE of the following describes the possible impact on the plant and the correct compensatory actions for this situation?

A. 2A D/G could become INOPERABLE due to cold conditions. Start the D/G to warm up the room. Install temporary heaters to maintain temperature above 60°F.

B. The D/G cooling water system could freeze which would INOP the 2A D/G. Install temporary heating units to supplement the room heaters and install temporary temperature indication in the room.

C. 2A D/G oil could cool down and affect the auto start capability of the D/G. Verify room heaters are operating properly. Declare the D/G INOPERABLE if room temperature is <60°F for 12 hours.

D. 2A D/G could become INOPERABLE due to cold conditions. Verify D/G room and switchgear room louvers are completely closed. Also, verify room heaters are energized and maintaining temperature.

References: DI-OPS-36-0989N Rev. 13 pg 1 of 4.

A. Incorrect since D/G does not become INOPERABLE immediately. Also, there isn't direction to install temporary heating.

B. Incorrect since the D/G cooling water can't freeze since it is filled with anti freeze. Also, no direction to install temporary heating and temperature indication.

C. Incorrect since the oil is heated with an immersion heater to maintain proper temperature. No direction to declare D/G INOPERABLE if temp goes below 60°F.

D. Correct answer.

RO Tier:	T2G3	SRO Tier:	T2G3
Keyword:	COLD WEATHER	Cog Level:	C/A 2.6/2.7
Source:	N	Exam:	HT02301
Test:	C	Misc:	TCK

12. 288000A2.05 001

The weather forcast for the oncoming shift is high winds with the temperature dropping to the low teens. The System Operator (SO) is performing outside rounds and notes that upon entering the 2A D/G room that the temperature is abnormally cold.

Which ONE of the following describes the possible impact on the plant and the correct compensatory actions for this situation?

A. 2A D/G could become INOPERABLE due to cold conditions. Start the D/G to warm up the room. Install temporary heaters to maintain temperature above 60°F.

B. The D/G cooling water system could freeze which would INOP the 2A D/G. Install temporary heating units to supplement the room heaters and install temporary temperature indication in the room.

C. 2A D/G oil could cool down and affect the auto start capability of the D/G. Verify room heaters are operating properly. Declare the D/G INOPERABLE if room temperature is <60°F for 12 hours.

D. Verify D/G room and switchgear room louvers are completely closed. Also, verify room heaters are energized and maintaining temperature.

References: DI-OPS-36-0989N Rev. 13 pg 1 of 4.

A. Incorrect since D/G does not become INOPERABLE immediately. Also, there isn't direction to install temporary heating.

B. Incorrect since the D/G cooling water can't freeze since it is filled with anti freeze. Also, no direction to install temporary heating and temperature indication.

C. Incorrect since the oil is heated with an immersion heater to maintain proper temperature. No direction to declare D/G INOPERABLE if temp goes below 60°F.

D. Correct answer.

RO Tier:	T2G3	SRO Tier:	T2G3
Keyword:	COLD WEATHER	Cog Level:	C/A 2.6/2.7
Source:	N	Exam:	HT02301
Test:	C	Misc:	TCK

53. 288000A2.05 001

The weather forcast for the oncoming shift is high winds with the temperature dropping below zero. The non-licensed Operator is performing outside rounds and notes that upon entering the 2A D/G room that the temperature is abnormally cold.

Which ONE of the following describes the possible impact on the plant and the correct compensatory actions for this situation?

A. 2A D/G could become INOPERABLE due to cold conditions. Start the D/G to warm up the room. Install temporary heaters to maintain temperature above 60°F.

B. The D/G cooling water system could freeze which would INOP the 2A D/G. Install temporary heating units to supplement the room heaters and install temporary temperature indication in the room.

C. 2A D/G oil could cool down and affect the auto start capability of the D/G. Verify room heaters are operating properly. Declare the D/G INOPERABLE if room temperature is <60°F for 12 hours.

D. If room temperature gets cold enough then fire piping may freeze. Verify D/G room and switchgear room louvers are completely closed. Also, verify room heaters are energized and maintaining temperature.

References: DI-OPS-36-0989N Rev. 13 pg 1 of 4.

A. Incorrect since D/G does not become INOPERABLE immediately. Also, there isn't direction to install temporary heating.

B. Incorrect since the D/G cooling water can't freeze since it is filled with anti freeze. Also, no direction to install temporary heating and temperature indication.

C. Incorrect since the oil is heated with an immersion heater to maintain proper temperature. No direction to declare D/G INOPERABLE if temp goes below 60°F.

D. Correct answer.

RO Tier:	T2G3	SRO Tier:	T2G3
Keyword:	COLD WEATHER	Cog Level:	C/A 2.6/2.7
Source:	N	Exam:	HT02301
Test:	C	Misc:	TCK

QUESTIONS REPORT
for HT2002

1. 288000A2.05 001

The weather forcast for the oncoming shift is high winds with the temperature dropping below zero. The non-licensed Operator is performing outside rounds and notes that upon entering the 2A D/G room that the temperature is abnormally cold. DETERMINE the possible impact on the plant and the correct compensatory actions for this situation.

A. Unit 2 enters a 72 hr LCO due to 2A D/G being INOPERABLE. Start the D/G to warm up the room and return D/G to OPERABLE status. Install temporary heaters to maintain temperature above 60 F.

B. The D/G cooling water system could freeze which would INOP the 2A D/G. Install temporary heating units to supplement the room heaters and install temporary temperature indication in the room.

C. 2A D/G oil could cool down and affect the auto start capability of the D/G. Verify room heaters are operating properly. Declare the D/G INOPERABLE if room temperature is <60 F for 12 hours.

D. If room temperature gets cold enough then fire piping may freeze. Verify D/G room and switchgear room louvers are completely closed. Also, verify room heaters are energized and maintaining temperature.

References: DI-OPS-36-0989N Rev. 13 pg 1 of 4.

A. Incorrect since D/G does not become INOPERABLE immediately. Also, there isn't direction to install temporary heating.

B. Incorrect since the D/G cooling water can't freeze since it is filled with anti freeze. Also, no direction to install temporary heating and temperature indication.

C. Incorrect since the oil is heated with an immersion heater to maintain proper temperature. No direction to declare D/G INOPERABLE if temp goes below 60 F.

D. Correct answer.

1.0 OBJECTIVE

To provide instructions for performing cold weather checks.

2.0 APPLICABILITY

This instruction is applicable to both Unit 1 AND Unit 2, AND will be complied with daily WHEN outside temperatures are expected to drop below 40 degrees F.

3.0 RESPONSIBILITIES

The Supt. Shift will be responsible for implementing this instruction.

4.0 INSTRUCTIONS

The following equipment is susceptible to cold weather conditions AND will be monitored as appropriate to ensure adequate precautions are taken. WHEN specified by applicable plant procedures, precautionary actions will be taken to protect equipment. Otherwise, actions taken will be at the discretion of the Supt. Shift.

4.1 PLANT SERVICE WATER dP SWITCHES

- 1P41-N522, 523, 524, 525
- 2P41-N307A, B, C, D

Check that temporary heating is maintaining temperature. Request maintenance to install temporary heating, IF NOT INSTALLED.

4.2 AUXILIARY BOILER

Check that the boiler is fired OR drained. Fire OR drain as necessary per approved plant procedures. Refer to 34SO-P61-001-0S.

4.3 DIESEL GENERATOR BUILDING VENTILATION

4.3.1 Check that the D/G room AND switchgear room louvers are completely closed. Louvers are normally closed below about 80 degrees F. Notify the respective unit Shift Supervisor IF any louvers cannot be completely closed.

4.3.2 Check that the D/G room AND switchgear room heaters are maintaining temperature.

13. 290001A3.01 001

Units 1 and 2 are operating at 100% power when a Hi-Hi alarm is received on reactor building exhaust ventilation radiation monitor channels 1D11-K609A and B. Channels 1D11-K609C and D are reading normal.

Which ONE of the following describes the response of the Secondary Containment Systems?

A. Unit 1 and 2 SBGT systems auto start. Unit 1 and 2 Reactor Building ventilation trips and all isolation valves close.

B. Unit 1 and 2 SBGT systems auto start. Unit 1 and 2 Reactor Building ventilation trips and only the inboard isolation valves close.

C. Unit 1 SBGT system auto starts. Unit 1 Reactor Building ventilation trips and all the Unit 1 isolation valves close.

D. Unit 2 SBGT system auto starts. Unit 2 Reactor Building ventilation trips and all the Unit 2 isolation valves close.

Reference: LT-LP-10007 Rev. 04, pg. 28
EO 200.030.a.10
Revised distractors and stem to make it more plausible.

A. Incorrect since only the inboard isolation valves close.

B. Correct answer.

C. Incorrect since both trains of SBGT and both units Rx Bldg Vents isolate with only the inboard isolation valves going closed.

D. Incorrect since both trains of SBGT and both units Rx Bldg Vents isolate with only the inboard isolation valves going closed.

RO Tier:	T2G2	SRO Tier:	T2G1
Keyword:	SBGT RX BLDG VENTS	Cog Level:	C/A 3.9/4.0
Source:	B	Exam:	HT02301
Test:	C	Misc:	TCK

54. 290001A3.01 001

Units 1 and 2 are operating at 100% power when a Hi-Hi alarm is received on reactor building exhaust ventilation radiation monitor channels U1-K609A and B. Channels U1-K609C and D are reading normal.

Which ONE of the following describes the response of the Secondary Containment Systems?

A. Unit 1 and 2 SBGT systems auto start. Unit 1 and 2 Reactor Building ventilation trips and all isolation valves close.

B. Unit 1 and 2 SBGT systems auto start. Unit 1 and 2 Reactor Building ventilation trips and only the inboard isolation valves close.

C. Unit 1 SBGT system auto starts. Unit 1 Reactor Building ventilation trips and all the Unit 1 isolation valves close.

D. Unit 2 SBGT system auto starts. Unit 2 Reactor Building ventilation trips and all the Unit 2 isolation valves close.

Reference: LT-LP-10007 Rev. 04, pg. 28
EO 200.030.a.10
Revised distractors and stem to make it more plausible.

A. Incorrect since only the inboard isolation valves close.

B. Correct answer.

C. Incorrect since both trains of SBGT and both units Rx Bldg Vents isolate with only the inboard isolation valves going closed.

D. Incorrect since both trains of SBGT and both units Rx Bldg Vents isolate with only the inboard isolation valves going closed.

RO Tier:	T2G2	SRO Tier:	T2G1
Keyword:	SBGT RX BLDG VENTS	Cog Level:	C/A 3.9/4.0
Source:	B	Exam:	HT02301
Test:	C	Misc:	TCK

QUESTIONS REPORT
for HT2002

1. 290001A3.01 001

Units 1 and 2 are operating at 100% power when a Hi-Hi alarm is received on reactor building exhaust ventilation radiation monitor channels K609A and B while channels C and D have failed as is. Which one of the following describes the response of the Secondary Containment Systems?

A. Unit 1 and 2 SBGT systems auto start. Unit 1 and 2 Reactor Building ventilation trips and all isolation valves close.

B. Unit 1 and 2 SBGT systems auto start. Unit 1 and 2 Reactor Building ventilation trips and only the inboard isolation valves close.

C. Unit 1 SBGT system auto starts. Unit 1 Reactor Building ventilation trips and all the Unit 1 isolation valves close.

D. Unit 2 SBGT system auto starts. Unit 2 Reactor Building ventilation trips and all the Unit 2 isolation valves close.

Reference: LT-LP-10007 Rev. 04, pg. 28
EO 200.030.a.10
Revised distractors to make it more plausible.

A. Incorrect since only the inboard isolation valves close.

B. Correct answer.

C. Incorrect since both trains of SBGT and both units Rx Bldg Vents isolate with only the inboard isolation valves going closed.

D. Incorrect since both trains of SBGT and both units Rx Bldg Vents isolate with only the inboard isolation valves going closed.

e. The system is setup with a two-out-of- two-taken-twice logic off the Hi-Hi alarm for a system trip.

1) Channels A and B are grouped together and Channels C and D are grouped together.

2) If both channels A and B or channels C and D trip, half actuation results.

A half actuation results in initiation of Unit 1 & 2 SBGT Trains and the Inboard or Outboard Isolation dampers closing.

3) All four channels must trip for full system actuation.

2. Refuel Floor Exhaust Ventilation Monitoring

There are twelve Geiger-Mueller detectors for Unit 2 and four Geiger-Mueller detectors for Unit 1.

a. The twelve detectors for Unit Two are setup in three groups of four and are located as follows:

EO 7

1) Four detectors monitor refuel zone common exhaust line radiation levels (N012A/B/C/D).

2) Four detectors monitor the west side reactor well exhaust line only. (N024A/B/C/D)

3) Four detectors monitor the east side reactor well, spent fuel pool, and dryer separator pool exhaust line. (N025A/B/C/D)

b. The RPS buses power all of the detectors.

1) Detectors from channels A and C are powered from RPS Bus 2A.

10. Given plant conditions, EVALUATE those conditions and DETERMINE the automatic actions that occur when any of the following monitors reach their Hi-Hi setpoint: (200.030.a.10)

    a. Unit One Reactor Building Ventilation Exhaust

    b. Unit One Refuel Floor Ventilation Exhaust

    c. Unit Two Reactor Building Ventilation Exhaust

    d. Unit Two Refuel Floor Ventilation Exhaust

11. From a list, IDENTIFY the function of each position of the selector switch on a Area Radiation Monitor indicator trip unit. (200.030.a.11)

12. STATE the reason for monitoring radiation in the RBCCW system, PSW system, and the Liquid Radwaste system. (200.030.a.13)

13. Given system conditions, EVALUATE and DETERMINE if Liquid Radwaste should have tripped or isolated. (200.030.a.14)

    * **Not Selected for Requal**

55. 290002G2.1.28 001

Which ONE of the following statements CORRECTLY describes a component within the RPV?

A. The baffle plate provides a mounting surface for the jet pump diffusers and separates the downcomer area from the below core plate area.

B. Flow orifices are mounted in the control rod housing, directly aligned with the fuel support piece.

C. The steam seperator dries the steam/fluid mixture to 99.9% quality.

D. The Standby Liquid Control/Core dp Pipe is a permanently mounted pipe within a pipe with the outer pipe used for SBLC injection.

References: SI-LP-04402 Rev. SI-00 pg 4-10 of 27
LO LT-04402.001

A. Correct answer.

B. Incorrect since the flow orifices are located in the fuel support pieces.

C. Incorrect since the steam separators increase the steam quality from approximately 13% to 90%.

D. Incorrect since the SBLC system uses the inner tube to inject Boron.
Changed the answer about the Core Spray spargers to an answer about the SBLC injection pipe.

RO Tier:	T2G3	SRO Tier:	T2G3
Keyword:	VESSEL INTERNALS	Cog Level:	MEM 3.2/3.3
Source:	B	Exam:	HT02301
Test:	C	Misc:	TCK

31. 290002G2.1.28 001

CHOOSE the statement below that CORRECTLY describes a component within the RPV.

A. The baffle plate provides a mounting surface for the jet pump diffusers and separates the downcomer area from the below core plate area.

B. Flow orifices are mounted in the control rod housing, directly aligned with the fuel support piece.

C. The steam seperator dries the steam/fluid mixture to 99.9% quality.

D. The Standby Liquid Control/Core dp Pipe is a permanently mounted pipe within a pipe with the outer pipe used for SBLC injection.

References: SI-LP-04402 Rev. SI-00 pg 4-10 of 27
LO LT-04402.001

A. Correct answer.

B. Incorrect since the flow orifices are located in the fuel support pieces.

C. Incorrect since the steam separators increase the steam quality from approximately 13% to 90%.

D. Incorrect since the SBLC system uses the inner tube to inject Boron.
Changed the answer about the Core Spray spargers to an answer about the SBLC injection pipe.

III. Components

Fig 2

A. Feedwater Sparger

The feedwater spargers deliver subcooled water to the downcomer region of the vessel. The spargers distribute the water so that it does not impinge on the vessel wall. The sparger consists of four 70° segments, (with a 20° gap between each sparger); each has a thermal sleeve welded to the sparger and slip fits to a vessel nozzle. Both ends of the spargers are secured to brackets on the vessel inside wall.

Fig 3

B. Baffle Plate

The baffle plate, also called the diffuser seal plate or shroud support plate, provides a mounting surface for jet pump diffusers and separates the downcomer area from the vessel bottom head area. It is installed in the factory prior to shipment and is welded to the vessel wall. Inconel provides transition from stainless steel to the low alloy reactor pressure vessel wall. There are two access holes 180° apart in the baffle plate that allowed access to the vessel bottom head area during construction. The access holes are sealed by use of Alloy 600 Plates bolted and tack welded to the baffle plate.

C. Jet Pumps

The jet pumps provide forced flow of the coolant/moderator through the core to yield a higher power level than would be safely obtainable without increasing the size of the reactor vessel. There are 10 inlet riser assemblys, each contains two (2) jet pumps for a total of 20 jet pumps. Each of the ten jet pump assemblies consist of the following items:

- One inlet riser and thermal sleeve which is welded to the riser assembly nozzle.
- One transition piece welded to the top of the inlet riser.
- Two nozzles.
- Two mixing sections which slip into the upper end of the diffusers and are held in place at the midpoint by the bracket and restrainer gate assembly.
- One bracket and restrainer gate assembly with two diffuser sections (approximately 16" ID at the bottom).

OBJECTIVES

LEARNING OBJECTIVES

1. Given a simplified drawing of the Reactor Vessel, TRACE the flow path through the vessel. (LT-04402.004)

2. Given a cutaway drawing of the Reactor Vessel, LABEL the following components: (LT-04402.001)

   a. Baffle Plate

   b. Jet Pumps

   c. Core Shroud

   d. Core Plate

   e. Control Rod Guide Tubes

   f. Steam Separator

   g. Steam Dryers

3. Given a list of statements, CHOOSE the statement which best describes the reason for core orificing. (LT-04402.002)

4. STATE the general location of the two zones of orifices. (LT-04402.003)

5. Given a list of statements, IDENTIFY the statement which best describes the operation of the steam dryer and steam separator. (LT-04402.005)

14. 290003K5.02 001

Both Units are operating at 100% RTP. It is reported that the Control Room HVAC can only maintain a positive pressure of 1/5 inch WG relative to the Turbine Building during the pressurization mode. Outside air flow rate is 399 cfm and subsystem flowrate is 2600 cfm.

Based on these plant conditions, which ONE of the following describes the Control Room HVAC system? (Provide copy of TS 3.7.4 with SR's)

A.✓ would still be OPERABLE because Control Room to Turbine Building dp and ventilation flow rates are adequate.

B. would be INOPERABLE because Control Room to outside Turbine Building dp is too low.

C. would be INOPERABLE because the Control Room ventilation subsystem flow rate is inadequate.

D. would be INOPERABLE because outside air flow rate is inadequate.

References: Tech Spec section 3.7.4, MCREC System SR 3.7.4.4
Modified answers to reflect only one correct answer

A. Correct answer since dP is ≥ 0.1" wg, subsystem flow rate is ≤ 2750 cfm and outside air flow is ≤ 400 cfm.

B. Incorrect since the dP is adequate.

C. Incorrect since the subsystem flow rate is adequate.

D. Incorrect since the outside air flowrate is adequate.

RO Tier:	T2G2	SRO Tier:	T2G2
Keyword:	CONTROL ROOM HVAC	Cog Level:	C/A 2.8/2.8
Source:	B	Exam:	HT02301
Test:	C	Misc:	TCK

56. 290003K5.02 001

Both Units are operating at 100% RTP. It is reported that the Control Room HVAC can only maintain a positive pressure of 1/5 inch WG relative to the Turbine Building during the pressurization mode. Outside air flow rate is 399 cfm and subsystem flowrate is 2600 cfm.

Based on these plant conditions, which ONE of the following describes the Control Room HVAC system?

A. ✓ would still be OPERABLE because Control Room to Turbine Building dp and ventilation flow rates are adequate.

B. would be INOPERABLE because Control Room to outside Turbine Building dp is too low.

C. would be INOPERABLE because the Control Room ventilation subsystem flow rate is inadequate.

D. would be INOPERABLE because outside air flow rate is inadequate.

References: Tech Spec section 3.7.4, MCREC System SR 3.7.4.4
Modified answers to reflect only one correct answer

A. Correct answer since dP is ≥ 0.1" wg, subsystem flow rate is ≤ 2750 cfm and outside air flow is ≤ 400 cfm.

B. Incorrect since the dP is adequate.

C. Incorrect since the subsystem flow rate is adequate.

D. Incorrect since the outside air flowrate is adequate.

RO Tier:	T2G2	SRO Tier:	T2G2
Keyword:	CONTROL ROOM HVAC	Cog Level:	C/A 2.8/2.8
Source:	B	Exam:	HT02301
Test:	C	Misc:	TCK

QUESTIONS REPORT
for HT2002

1. 290003K5.02 001

Both Units are operating at 100% RTP. It is reported that the Control Room HVAC can only maintain a positive pressure of 1/5 inch WG relative to the Turbine Building. Outside air flow rate is 399 cfm and subsystem flowrate is 2600 cfm. Based on these plant conditions, Unit 1 Control Room HVAC:

A. would still be OPERABLE because Control Room to Turbine Building dp and ventilation flow rates are adequate.

B. would be INOPERABLE because Control Room to outside Turbine Building dp is too low.

C. would be INOPERABLE because the Control Room ventilation subsystem flow rate is inadequate.

D. would be INOPERABLE because outside air flow rate is inadequate.

References: Tech Spec section 3.7.4, MCREC System SR 3.7.4.4
Modified answers to reflect only one correct answer

A. Correct answer since dP is $\geq$ 0.1" wg, subsystem flow rate is $\leq$ 2750 cfm and outside air flow is $\leq$ 400 cfm.

B. Incorrect since the dP is adequate.

C. Incorrect since the subsystem flow rate is adequate.

D. Incorrect since the outside air flowrate is adequate.

SURVEILLANCE REQUIREMENTS (continued)

SURVEILLANCE		FREQUENCY
SR 3.7.4.4	Verify each MCREC subsystem can maintain a positive pressure of ≥ 0.1 inches water gauge relative to the turbine building during the pressurization mode of operation at a subsystem flow rate of ≤ 2750 cfm and an outside air flow rate ≤ 400 cfm.	18 months on a STAGGERED TEST BASIS

57. 295001AK2.07 001

Unit 2 startup is in progress with no equipment out of service. Reactor power is 40% and the speed of both recirc pumps was just raised to 30%. A trip of Recirc Pump "2A" occurs and the operator performs the actions of 34AB-B31-001-2S, *Reactor Recirculation Pump(s) Trip, or Recirc Loops Flow Mismatch* to stabilize the plant.

Which ONE of the following describes how an accurate reading of total core flow is determined under these conditions?

A.✓ Total core flow must be manually calculated by adding "2A" and "2B" Jet Pump Loop flows to obtain an accurate reading.

B. The Total Core Flow indication must be reduced by the "2A" Jet Pump Loop flow to obtain an accurate reading.

C. Total core flow must be manually calculated by subtracting "2A" Jet Pump Loop flow from the "2B" Jet Pump Loop flow to obtain an accurate reading.

D. The summing circuitry for the Total Core Flow indication automatically accounts for the idle "2A" recirc loop and provides an accurate reading.

References: 34AB-B31-001-2S Rev 7.2 pg 3 of 7.
Hatch 99 Exam question #56
Slight modifications to stem and added LOOP to all flows in answers.
Resequenced answers.

A. Correct answer.

B. Incorrect since you cannot subtract the 2A Jet Pump Loop flow from the Total Flow indication and get an accurate reading.

C. Incorrect since you have to add the two loop flows together to get an accurate reading.

D. Incorrect since the summing circuitry does not account for an idle recirc pump.

RO Tier:	T1G2	SRO Tier:	T1G2
Keyword:	RECIRC	Cog Level:	MEM 3.4/3.4
Source:	B	Exam:	HT02301
Test:	C	Misc:	TCK

QUESTIONS REPORT
for HT2002

1. 295001AK2.07 001

Unit 2 startup is in progress with no equipment out of service. Reactor power is 40% and the speed of both recirc pumps was just raised to 30%. A trip of Recirc Pump "2A" occurs and the operator performs the actions of 34AB-B31-001-2S, *Reactor Recirculation Pump(s) Trip, or Recirc Loops Flow Mismatch* to stabilize the plant. Which one of the following describes how an accurate reading of total core flow is determined under these conditions?

A.✓ Total core flow must be manually calculated by adding "2A" and "2B" Jet Pump Loop flows to obtain an accurate reading.

B. The Total Core Flow indication must be reduced by the "2A" Jet Pump Loop flow to obtain an accurate reading.

C. Total core flow must be manually calculated by subtracting "2A" Jet Pump Loop flow from the "2B" Jet Pump Loop flow to obtain an accurate reading.

D. The summing circuitry for the Total Core Flow indication automatically accounts for the idle "2A" recirc loop and provides an accurate reading.

References: 34AB-B31-001-2S Rev 7.2 pg 3 of 7.
Hatch 99 Exam question #56
Slight modifications to stem and added LOOP to all flows in answers.
Resequenced answers.

A. Correct answer.

B. Incorrect since you cannot subtract the 2A Jet Pump Loop flow from the Total Flow indication and get an accurate reading.

C. Incorrect since you have to add the two loop flows together to get an accurate reading.

D. Incorrect since the summing circuitry does not account for an idle recirc pump.

4.0 SUBSEQUENT OPERATOR ACTIONS

4.1 IF the OPRM System is inop, enter 34AB-C51-001-2S, and perform concurrently with this procedure.

NOTE

During single loop operation, WHEN the speed of the running pump decreases below approximately 35% speed, positive flow through the idle pump loop due to natural circulation overcomes the negative flow due to reverse flow. The total core flow summing circuitry will continue to subtract this positive idle loop flow from the running loop flow AND give a misleading LOW core flow indication. Total core flow can be calculated by adding the JET PUMP LOOP "A" AND the JET PUMP LOOP "B" flows.

4.2 Reduce the operating Reactor Recirculation Pump flow to less than 100% speed, IF possible. Do NOT exceed 100% speed on the operating pump.

4.3 Do NOT enter OR operate in the Region of Potential Instabilities of Attachment 1 of 34GO-OPS-005-2S, except IF required for protection of plant equipment whose failure could adversely impact plant safety.

4.4 IF the Region of Potential Instabilities shown on Attachment 1 of 34GO-OPS-005-2S is entered at any time during the performance of this procedure, take actions to exit per the STA's direction, within any limitations needed for equipment protection.

CAUTION

IF THE DISCHARGE VALVE OF THE TRIPPED PUMP IS NOT REOPENED WITHIN FIVE MINUTES, THERMAL BINDING OF THE DISCHARGE VALVE MAY OCCUR.

NOTE

The closure of the affected pumps discharge valve is required to prevent reverse rotation of the affected Reactor Recirculation Pump. This action allows the pump to seat on its thrust bearing, thus preventing reverse rotation.

4.5 IF a Recirc. Pump has tripped, THEN CLOSE Pump Disch Vlv, 2B31-F031A or B, on the affected Reactor Recirculation Pump. Note the time WHEN the valve is fully CLOSED.

4.6 WITHIN five minutes, if necessary, THROTTLE OPEN the affected Pump Disch Vlv, 2B31-F031A OR B, to maintain less than 50°F suction temperature differential between the loops, as indicated on Recirc Pump Suction Temperature, 2B31-R650, on Panel 2H11-P602.

#94

56. A startup of Unit 2 is in progress with no equipment out of service. Reactor power is 40% and the speed of both recirc pumps was just raised to 30%. A trip of Recirc Pump "2A" occurs and the operators respond to the transient per the guidance of 34AB-B31-001-2S, "*Reactor Recirculation Pump(s) Trip, or Recirc Loops Flow Mismatch*" to stabilize the plant. Which one of the following describes how an accurate reading of total core flow is determined under these conditions?

a. The Total Core Flow indication must be reduced by the "2A" Jet Pump flow to obtain an accurate reading.
✓b. Total core flow must be manually calculated by adding "2A" and "2B" Jet Pump flows to obtain an accurate reading.
c. Total core flow must be manually calculated by subtracting "2A" Jet Pump flow from the "2B" Jet Pump flow to obtain an accurate reading.
d. The summing circuitry for the Total Core Flow indication automatically accounts for the idle "2A" recirc loop and provides an accurate reading.

New question
34AB-B31-001-2S, p. 2, Note
SI-LP-0041-01, p. 19

KEY WORDS:

System	K/A No.	K/A Value	Difficulty	SamplePlan	Vendor	Licensee	Last used
295001	AK2.07	(3.4/3.4)	2	TIER1GRP2	BWR-4	HATCH	NEW

DATES: Modified: Thursday, September 30, 1999 Used:

9. 295003AK2.01 001

A small LOCA with a LOSS OF OFFSITE POWER occurred on Unit 2 at 0100 on 5/21/02. 600V Bus 2D is being powered from Diesel Generator 2C (Load Shed equipment still **de-energized**) and HPCI is running to maintain reactor vessel water level between -35 and +51.5 inches.

Which ONE of the following predicts how HPCI will respond over the next 3 hours with no operator action?

A. HPCI will continue to operate automatically by maintaining reactor vessel level in a band of -35 inches to +51.5 inches.

B. HPCI will continue to operate automatically by maintaining reactor vessel level between +51.5 inches and the high level reset setpoint.

C. HPCI will operate until it reaches +51.5 inches and will not operate again until the operator depresses the High Level Reset pushbutton.

D. HPCI will continue to operate for approximately 2 hours by cycling between +51.5 inches and -35 inches and then it will fail to operate.

References: SI-LP-00501 Rev. 01 pg 14 - 16 of 46
FSAR Section 8.3.2.1.1, 125/250 VDC Station Battery Power System

A. Incorrect since HPCI will not operate after approximately 2 hours.

B. Incorrect since HPCI will not cycle between 51.5 inches and the reset setpoint. It requires manual action to start HPCI at the reset setpoint.

C. Incorrect since HPCI will automatically start again when level drops to -35".

D. Correct answer.

RO Tier:	T1G2	SRO Tier:	T1G1
Keyword:	LOSS OF POWER	Cog Level:	C/A 3.2/3.3
Source:	N	Exam:	HT02301
Test:	C	Misc:	

60. 295003AK2.01 001

A small LOCA with a LOSS OF OFFSITE POWER occurred on Unit 2 at 0100 on 5/21/02. 600V Bus 2D is being powered from Diesel Generator 2C (Load Shed equipment still de-energized) and HPCI is running to maintain reactor vessel water level between -35 and +51.5 inches.

Which ONE of the following predicts how HPCI will respond over the next 3 hours with no operator action?

A. HPCI will continue to operate automatically by maintaining reactor vessel level in a band of -35 inches to +51.5 inches.

B. HPCI will continue to operate automatically by maintaining reactor vessel level between +51.5 inches and the high level reset setpoint.

C. HPCI will operate until it reaches +51.5 inches and will not operate again until the operator depresses the High Level Reset pushbutton.

D.✓ HPCI will continue to operate for approximately 2 hours by cycling between +51.5 inches and -35 inches and then it will fail to operate.

References: SI-LP-00501 Rev. 01 pg 14 - 16 of 46
FSAR Section 8.3.2.1.1, 125/250 VDC Station Battery Power System

A. Incorrect since HPCI will not operate after approximately 2 hours.

B. Incorrect since HPCI will not cycle between 51.5 inches and the reset setpoint. It requires manual action to start HPCI at the reset setpoint.

C. Incorrect since HPCI will automatically start again when level drops to -35".

D. Correct answer.

RO Tier:	T1G2	SRO Tier:	T1G1
Keyword:	LOSS OF POWER	Cog Level:	C/A 3.2/3.3
Source:	N	Exam:	HT02301
Test:	C	Misc:	

QUESTIONS REPORT
for HT2002

1. 295003AK2.01 001

A small LOCA with a LOSS OF OFFSITE POWER occurred on Unit 2 at 0100 on 5/21/02. 600V Bus 2D is being powered from Diesel Generator 2C (Load Shed equipment still de-energized) and HPCI is running to maintain reactor vessel water level between -35 and +51.5 inches.

Which ONE of the following predicts how HPCI will respond over the next 3 hours with no operator action?

A. HPCI will continue to operate automatically by maintaining reactor vessel level in a band of -35 inches to +51.5 inches.

B. HPCI will continue to operate automatically by maintaining reactor vessel level between +51.5 inches and the high level reset setpoint.

C. HPCI will operate until it reaches +51.5 inches and will not operate again until the operator depresses the High Level Reset pushbutton.

D. HPCI will continue to operate for approximately 2 hours by cycling between +51.5 inches and -35 inches and then it will fail to operate.

References: SI-LP-00501 Rev. 01 pg 14 - 16 of 46
FSAR Section 8.3.2.1.1, 125/250 VDC Station Battery Power System

A. Incorrect since HPCI will not operate after approximately 2 hours.

B. Incorrect since HPCI will not cycle between 51.5 inches and the reset setpoint. It requires manual action to start HPCI at the reset setpoint.

C. Incorrect since HPCI will automatically start again when level drops to -35".

D. Correct answer.

b. F001 will close with the control switch but will reopen as soon as the control switch is released.

4. Minimum Flow Valve F012

- Interlocked to shut if Steam Supply Valve or Turbine Stop Valve are fully closed

5. CST Suction Valve F004

a. Auto-closes if F041 and F042 full open

b. Will auto-open on an initiation signal if F041 OR F042 are not full open

6. Condensate Pump Discharge to Clean Radwaste F025 and F026

a. If open, both will auto-close if Steam Supply Valve F001 opens.

b. With Steam Supply Valve F001 fully closed, F026 will open or close to control Barometric Condenser level.

7. Steam Line Drain Isolation Valves F028 and F029

- Interlocked closed if F001 is not fully closed.

8. Exhaust Line Vacuum Breaker Isolation Valves F104 and F111

- Interlocked closed if High Drywell Pressure (1.85 psig) AND HPCI Low Steam Line Pressure (128 psig) exist simultaneously.

C. Initiations

Fig 4

1. The HPCI system will auto initiate with a Reactor Low Water Level of -35" or a High Drywell Pressure of 1.85 psig. Either of these signals is indication of a LOCA. The system response to an auto-initiation is as follows:

a. F001 opens.

b. If Torus Suction Valves F041 and F042 are not fully open, CST Suction Valve F004 opens if closed.

c. Barometric Condenser Vacuum Pump starts.

d. Auxiliary Oil Pump starts to supply oil to the turbine bearings and to open the Turbine Stop Valve and Control Valve.

e. Turbine Stop Valve opens.

f. Turbine Control Valve opens.

g. Cooling Water Supply Valve F059 opens after F001 and the TSV leave their closed seat.

h. Test Valves to CST F008 and F011 closes if open.

i. Pump Discharge Valve F007 opens if closed.

j. Once Turbine Stop and Steam Supply Valves are 10% open, the Injection Valve F006 opens.

k. The HPCI turbine starts & comes up to speed as controlled by the HPCI flow controller.

l. Once the turbine is rolling and discharge pressure reaches 144 psig, the Minimum Flow Valve F012 opens until system flow reaches 790 gpm.

m. Steam Line Drain Isolation Valves F028 and F029 close.

n. Condensate Pump Discharge to Clean Radwaste F025 and F026 close.

o. The stby HPCI rm cooler starts.

D. Trips

1. HPCI Turbine Trips

a. Unit 1 and Unit 2 Trips

1) Reactor water level high 51.7"
(51.5" Unit 1)

2) Turbine over-speed (mechanical) 5000 rpm

3) Turbine exhaust press high 140 psig

4) Pump suction press low 10" Hg Vac

5) Any system isolation signal.

6) Manual Trip pushbutton on H11-P601 is used to trip the turbine from the Control Room if a malfunction should occur or to secure the system after operation.

7) Local Manual Trip

Fig 5

b. Turbine Trip System Response

1) Turbine Stop Valve closes.

2) Injection Valve (F006) interlocks closed when Turbine Stop Valve is fully closed.

3) Minimum Flow Valve (F012) interlocks closed when Turbine Stop Valve is fully closed.

4) Auxiliary Oil Pump starts at 39 psig oil pressure.

c. The Reactor water level high trip is unique in that F001 is interlocked closed as long as the high level trip is in. When level decreases below the high level trip setpoint HPCI may be restarted by depressing the High Level Reset pushbutton. In the event the high level trip is not reset and level decreases to the Low Level initiation setpoint HPCI will auto start as stated above.

All HPCI Turbine Trips with the exception of High Water Level will automatically reset when the trip is below its trip point.

Fig 6

2. HPCI Turbine Trip Mechanism

a. Stop Valve Open, Turbine Operating

1) 100# Oil is supplied from either the Aux Oil Pump or the Shaft Driven Oil Pump. 100# Oil provides oil for:

- Opening the Stop Valve
- 100-28# Pressure Reducing Valve

2) 28# Oil downstream of the pressure reducer supplies oil to the Stop Valve Pilot Valve.

b. Stop Valve Closed, Turbine Tripped

- 125-V-dc cooling tower battery system.

8.3.2.1.1 125/250-V-dc Station Battery Power System

The 125/250-V-dc power system (figure 8.3-4) is an ungrounded system equipped with ground-detection circuitry, which will give annunciation and meter indication in the MCR when a ground fault is present on the 125/250-V-dc power system. Multiple grounds on this system are not probable since the first ground would be located and removed as soon as possible after alarming in the MCR. This system is composed of the following:

A. Two independent plant service batteries 2A and 2B: Batteries 2A and 2B are 120-cell lead-calcium type, with a continuous discharge rating of 1254 Ah and 1513 Ah, respectively, for 2 h at 77°F to 1.75 V/cell average. Plant battery operating voltage is 125/250 V, and each battery has adequate storage capacity to carry the required load for ~ 2 h without recharging.

   Batteries 2A and 2B are located in separate rooms in the control building at el 112 ft. A Class 1 ventilation system in each battery room prevents the buildup of combustible gases and ensures operation during emergency conditions. Fire dampers are installed in the ventilation duct system to prevent fire from spreading from one battery room to the other. The batteries are mounted in racks, which are secured to pads located 5 ft above the floor. Both the batteries and the racks are designed to Class 1E requirements.

B. Six static-type battery chargers 2A through 2F: All six battery chargers are full-wave, silicon-controlled rectifier type rated at 400 A, with a voltage regulation of ± 0.75% from no load to 2% load and ± 0.5% from 2% load to full load, with an ac supply variation of ± 10% in voltage and ± 5% in frequency. Each battery charger is capable of recharging a battery from the minimum discharge condition in 24 h while supplying a normal steady-state dc load.

   The battery chargers are located in the control building at el 130 ft. Battery chargers 2A, 2B, and 2C are located in the dc switchgear 2A room, and battery chargers 2D, 2E, and 2F are located in the dc switchgear 2B room. The chargers are designed to Class 1E requirements.

C. Two independent and redundant 125/250-V-dc metal-clad switchgear buses 2A and 2B: These buses supply essential loads as shown on figure 8.3-4 and are supplied as follows:

   1. Bus 2A is normally supplied by 125-V battery chargers 2A and 2B with charger 2C as a standby source. Battery chargers 2A, 2B, and 2C are fed from 600-V essential bus 2C. Emergency dc power for 125/250-V-dc bus 2A is supplied by station battery 2A.

15. 295004AK3.03 001

Unit 2 is operating at 45% RTP when a loss of DC power causes the following:

Main Turbine trip
Reactor Scram and both Recirc pumps trip
125/250V BATTERY VOLTS LOW alarm

Which ONE of the following losses will most likely cause this transient?

A. 125 VDC Cabinet "2B", 2R25-S002.

B. 125 VDC Cabinet "2D", 2R25-S004.

C. 125/250 VDC Switchgear 2A, 2R22-S016.

D. 125/250 VDC Switchgear 2B, 2R22-S017.

References: LT-LP-02704 Rev. 03. pg 37 - 39 of 61
LT-LP-02704 Rev. 03. pg 50 - 55 of 61
EO 200.018.a.01

Changed initial conditions slightly and changed 2 distractors because it is likely that everyone knows that 24/48 VDC systems are mainly for neutron monitoring systems.

A. Incorrect since this Cabinet is powered by Switchgear 2A and it doesn't cause all of these things to happen.

B. Incorrect since this Cabinet affects DC control power and DG loads.

C. Correct answer.

D. Incorrect since this affects HPCI and Core Spray.

RO Tier:	T1G2	SRO Tier:	T1G2
Keyword:	125 VDC	Cog Level:	MEM 3.1/3.5
Source:	B	Exam:	HT02301
Test:	C	Misc:	TCK

61. 295004AK3.03 001

Unit 2 is operating at 45% RTP when a loss of DC power causes the following:

Main Turbine trip
Reactor Scram and both Recirc pumps trip
LPCI mode of RHR on Unit 1 is not available for the "A" loop

Which ONE of the following losses will most likely cause this transient?

A. 125 VDC Cabinet "B", 2R25-S002.

B. 125 VDC Cabinet "D", 2R25-S004.

C. 125/250 VDC Switchgear 2A, 2R22-S016.

D. 125/250 VDC Switchgear 2B, 2R22-S017.

References: LT-LP-02704 Rev. 03. pg 37 - 39 of 61
LT-LP-02704 Rev. 03. pg 50 - 55 of 61
EO 200.018.a.01

Changed initial conditions slightly and changed 2 distractors because it is likely that everyone knows that 24/48 VDC systems are mainly for neutron monitoring systems.

A. Incorrect since this Cabinet is powered by Switchgear 2A and it doesn't cause all of these things to happen.

B. Incorrect since this Cabinet affects DC control power and DG loads.

C. Correct answer.

D. Incorrect since this affects HPCI and Core Spray.

RO Tier:	T1G2	SRO Tier:	T1G2
Keyword:	125 VDC	Cog Level:	MEM 3.1/3.5
Source:	B	Exam:	HT02301
Test:	C	Misc:	TCK

QUESTIONS REPORT
for HT2002

1. 295004AK3.03 001

Unit 2 is operating at 45% RTP when a loss of DC power causes the following:

Main Turbine trip
Reactor Scram and both Recirc pumps trip
LPCI mode of RHR on Unit 1 is not available for the "A" loop

The most likely cause of this transient was the loss of:

A. 125 VDC Cabinet "B", 2R25-S002.

B. 125 VDC Cabinet "D", 2R25-S004.

C. 125/250 VDC Switchgear 2A, 2R22-S016.

D. 125/250 VDC Switchgear 2B, 2R22-S017.

References: LT-LP-02704 Rev. 03. pg 37 - 39 of 61
LT-LP-02704 Rev. 03. pg 50 - 55 of 61
EO 200.018.a.01

Changed initial conditions slightly and changed 2 distractors because it is likely that everyone knows that 24/48 VDC systems are mainly for neutron monitoring systems.

A. Incorrect since this Cabinet is powered by Switchgear 2A and it doesn't cause all of these things to happen.

B. Incorrect since this Cabinet affects DC control power and DG loads.

C. Correct answer.

D. Incorrect since this affect HPCI and Core Spray.

Question # LT-LP-027044-0002 **Objective:** 200.018.A.01

Media # LT-LP-02704-02

Unit 2 is operating at 90% power when a loss of DC power causes the ìfollowing conditions to exist.

Main Turbine trip
Reactor Scrams and both Recirc pumps trip
Generator PCBs are closed with reverse power condition present

The most likely cause of this transient was the loss of:

a. 125/250 VDC Switchgear 2A, 2R22-S016

b. 125/250 VDC Switchgear 2B, 2R22-S017

c. 24/48 VDC Cabinet 2A, 2R25-S015

d. 24/48 VDC Cabinet 2B, 2R25-S016

Answer: A.

4. Given a list of controls and instrumentation associated with the DC Electrical Systems, IDENTIFY those which are located in the control room. (027.060.a.02)

5. Given a loss of 125/250 VDC buses, 34AB-R22-001-2/1S, and System Operating Procedures, DESCRIBE the operability of the following systems: (200.018.a.01)

   a) EDGs
   b) HPCI
   c) RCIC
   d) 4160 VAC buses
   e) Main Turbine
   f) Main Generator
   g) Reactor Water Level Instrumentation
   h) Reactor Pressure Instrumentation
   i) Vital AC
   j) LPCI Inverters

6. Given a list of choices, DESCRIBE the normal operation of the 125/250 VDC Station Service Battery System. (027.044.a.03)

7. Given 34SO-R42-001-1S "125/250 VDC Station Service Charger Rotation and Breaker Racking", STATE the correct sequence to close the breakers at the battery chargers. (027.044.a.02)

There is a difference between the loss of a DC Bus and the loss of a DC Cabinet when restoring power to the component that lost power. Guidance is found in 34AB-R22-001-1/2S, "Loss of DC Buses".

Point out that the actions needed to be carried out in 34AB-R22-001-1/2S are explained in the LRQ lesson plan.

- On the loss of a DC Bus, the bus shall be stripped of all loads prior to closing the supply breaker. This will prevent the supply breaker from tripping on the current surge caused by the restarting of bus loads.
- On the loss of a DC Cabinet, an attempt should be made to shut the supply breaker without stripping loads. If the supply will not shut or stay shut, then strip the cabinet in order to find the faulted component.

EO 5

On a loss of 125/250 VDC Switchgear "A", R22-S016, the following major events occur:

- Main turbine will trip but output breakers must be opened manually to prevent motorizing the turbine.
- Reactor scrams and both recirc pumps trip if power is greater than 30%.
- RCIC is not available and all indication for DC powered RCIC loads are lost.
- The LPCI mode of RHR on Unit 1 is not available for the "A" loop due to E11-F015A losing power as a result of the Essential (LPCI) Inverter "A" (R24-S018A) being de-energized.
- Some reactor instrumentation is lost.

EO 5

On a loss of 125/250 VDC Switchgear "B", R22-S017, the following major events occur:

- Recirc pump "B" must be locally tripped because the Recirc MG Set motor has low oil pressure. The Recirc MG Set will have low oil pressure because it loses all but one of its lube oil pumps and one pump does not provide sufficient oil pressure for continued operation of the recirc MG set.
- The recirc pump will not trip by using the remote switch due to loss of its DC control power (Recirc pump "A" would also lose its normal DC control power but would still have its alternate.
- HPCI is not available and all indications for DC powered HPCI loads are lost.
- The LPCI mode of RHR on Unit 1 is not available for the "B" loop due to E11-F015B losing power. (R24-S018B loses power due to a loss of Essential (LPCI) Inverter "B")
- 4160/600 VAC breaker control power and some reactor instrumentation is lost.

The loss of 125 VDC Cabinet "A" &"C" looks similar to a loss of 125/250 VDC Switchgear "A" however, a loss of 125 VDC Cabinet "C" does not auto trip the Main Turbine.

Loss of 125 VDC Cabinets "A", "B", or "C" (R25-S001, R25-S002, or R25-S003) causes a loss of DC control power. Since 125 VDC Cabinets "A" and "C" are powered by 125/250 VDC Switchgear "A", the loss on one of these cabinets looks similar to a loss of 125/250 VDC Switchgear "A".

- The major difference between the loss of a cabinet and the loss of the 125/250 VDC Switchgear "A" is on a loss of a cabinet the indication for RCIC DC valves will remain on. They will be off on a loss of 125/250 VDC Switchgear "A".
- The action taken to recover from the loss of a cabinet includes many of the same action as a loss of 125/250 VDC Switchgear "A".

Since 125 VDC Cabinet "B" is powered by 125/250 VDC Switchgear "B", the loss of 125 VDC Cabinet "B" looks similar to a loss of 125/250 VDC Switchgear "B".

- The major difference between the loss of 125 VDC cabinet "B" and the loss of 125/250 VDC Switchgear "B" is on a loss of 125 VDC cabinet "B" the indication for HPCI DC valves will remain on. They will be off on a loss of 125/250 VDC Switchgear "B".

- The actions taken to recover from a loss of 125 VDC cabinet "B" include many of the same actions as the loss of 125/250 VDC Switchgear "B".

EO 5

Loss of 125 VDC Cabinets "D", "E", or "F" (R25-S004, R25-S005, or R25-S006) results in loss of 4160 VAC Emergency buses DC control power, diesel generator control circuitry, ARI logic power, and other loads.

- The DC cabinets are associated with the 125 VDC Diesel Auxiliary Power system. The loss of diesel generator control circuitry will cause the diesel generator to be declared inoperative since they have no field flash available.

- The loss of DC control power on 4160 VAC Emergency buses "1F" and "2F" result in breaker trips for loads on those buses because these breakers have an undervoltage trip on DC control power.

NOTE: The other buses, both Emergency and Station Service, do not have undervoltage trips on a loss of DC control power. They fail "as is" on a loss of DC control power and have to be locally operated.

The loss of 125 VDC Cabinet "D" or "E" (R25-S129 or R25-S130) results in the loss of one division of ECCS and RCIC control logic and actuation.

- VDC Cabinet D is powered by 125/250 VDC Switchgear A (R22-S016).

TABLE 2
LOADS OFF DC DISTRIBUTION SYSTEMS

NAME	MPL
250V DC Switchgear A (R22-S016)	130' C/B
LPCI Inverter "A" (Unit 1 only)	R44-S002
125 DC Cabinet 2A (C/B)	R25-S001
125 DC Cabinet 2C (T/B)	R25-S003
125V DC Distribution Cabinet D Feeder	R25-S129 (1R25-S105 Unit 1)
125V DC Switchgear 2C Feeders	2R22-S018 (Unit 2 only)
250V DC MCC A (R/B)	R24-S021
Emergency Lighting Cabinet	R27-S060
Station Battery Test Bank	R22-S063
RFPT 1A Emergency Oil pump (Unit 1 only)	Supplied by 2R22-S018 on Unit 2
Turbine Bearing Emergency Oil pump (Unit 1 only)	Supplied by 2R22-S018 on Unit 2
SPDS Inverter, R44-S004 (Unit 1 only)	Supplied by 2R25-S133 (CAS Security Supply) on Unit 2

TABLE 2
LOADS OFF DC DISTRIBUTION SYSTEMS

250V DC Switchgear B (R22-S017)	130' C/B
LPCI Inverter "B"(Unit 1 only)	R24-S003
125V DC Cabinet B (C/B)	R24-S002
125V DC Distribution Cabinet E Feeder	R24-S130
125/250V DC Switchgear 2D Feeders	2R22-S019 (Unit 2 only)
250V DC MCC B (R/B)	R24-S022
Emergency Lighting Cabinet	R24-S069
Station Battery Test Bank	R24-S063
RFPT 1B Emergency Oil pump (Unit 1 only)	Supplied by 2R22-S019 on Unit 2
DC Emergency Seal Oil pump (Unit 1 only)	Supplied by 2R22-S019 on Unit 2
125/250V DC Switchgear 2C (2R22-S018)	164' T/B SE
Main Turbine Emergency Bearing Oil Pump	2N34-C004
RFPT 2A Emergency Bearing Oil Pump	2N34-C009
125/250V DC Switchgear 2D (2R22-S019)	147' T/B East
DC Emergency Seal Oil Pump 2A	2N42-C002
RFPT 2B Emergency Bearing Oil pump	2N34-C010

TABLE 2
LOADS OFF DC DISTRIBUTION SYSTEMS

125 VDC Cabinet A (R25-S001)

4160 VAC Station Service Buses A and B Supply Breaker Control Power
600 VAC Essential Bus C Control Power
Condenser Flooding Relay Logic Div I
Feedwater Check Vlvs B21-F077A B
Channel "A" RHR Relay Logic (E11 System)
Main Gen. Primary Protective Relaying
Trip System "A" Back-Up Scram Valve (C71 System)
Unit Aux Sta Svc and Cooling Twr Xfmrs Diff Aux Relaying
Tip Shear Valves
Control Building Fire Protection (2Z43) (Unit 2 only)
Main Generator Secondary Relaying
Main Power Xfmr Annunciator Panel
Reactor Core Isolating Cooling Protective Logic (E51 System)
EHC Trip Control
HPCI and RCIC Control Logic
RFPT "A" Relay Logic
NSSS Pilot Valves for Inboard MSIV's and HPCI Isolation Relay Logic
RCIC Steam Leak Detection System Div I (B21 System)
RHR Valve Indication 2E11-F103A, F104A
Div I Feedwater Cntl Pwr Rx High Level Trip "B" (C32 System)
Startup Xfmrs Diff Aux Relaying
Alt Cntl Pwr for MG Set "A"
Recirc Pump Trip System "A" Logic (C71 System)
Core Spray "A" Relay Logic (E21 System)
NSSS Annunciator Cabinet (H11-P630)
Auto Depressurization System "A" Normal Cntl Pwr (B21C System)
LOCA Aux Relay Logic
Remote Shutdown Panel C82-P001
RCIC Power Inverter E51-K603 NSSS Post Accident Monitoring System
SBGT Heat Detector and Water Spray Division I
Loading - Unloading Controls for P51 Air Compressors
Hydrogen - Oxygen Anly SOV's & AOV's (P33 - P70 Sys)
2G41-P001 Fuel Pool Demin (Unit 2 only)
MCC 1E Normal Supply Breaker Trip (Unit 1 only)
Radwaste Panel Annunciation (1G11-P001) (Unit 1 only)
230KV Switchyard PCB Interposing Relays (1H11-P653) (Unit 1 only)
C/R Plant Service Water AC Low Flow Relay Division I (Unit 1 only)

TABLE 2
LOADS OFF DC DISTRIBUTION SYSTEMS

125 VDC Cabinet B (R25-S002)

4160 Station Service Buses A, B, C, and D Feeder Breaker Control Power
600 VAC Essential Bus D Breaker Control Power
Channel "B" RHR Relay Logic, Div II
HPCI Relay Logic Remote Turbine Trip (E41 System)
Radwaste Ventilation Annunciator Panel (Unit 2 only)
Trip System "B" Back-Up Scram Valve (C71 System)
HPCI Cntl Pwr RHR Valve Indn E11-F103B, E11-F104B
Feedwater Check Valves B21-F076A and B
Annunciation Cabinet H21-P237
NSSS Pilot Valves For Outboard MSIV's RCIC Relay Logic
RCIC Steam Leak Isol and Light Indication Div II (B21 System)
Div II Feedwater Cntl Power Rx Lvl Trip "C" (C32 System)
Core Spray "B" Relay Ads "B" Logic (E21, B21 System)
Alt Cntl Pwr for MG Set "B"
Recirc Pump Trip System "B" Logic (C71 System)
HPCI Pwr Sply E41-K603 Post Accident Monitor Speed
LOCA Aux Relay Logic
ATTS Cabinet 2H11-P926 Power Supply (Unit 2 only)
Condensate/Booster Pump Restart Logic (Unit 2 only)
ATTS Condensate 2H11-P928 Power Supply (Unit 2 only)
Remote Shutdown Panel
MCC 1E Alternate Supply Breaker Trip (Unit 1 only)
C/R Plant Service Water AC Low Flow Relay Division II (Unit 1 only)
Fire Protection System Solenoids 1Z43 (Unit 1 only)

TABLE 2
LOADS OFF DC DISTRIBUTION SYSTEMS

125 VDC Cabinet C (R25-S003)

600 VAC Station Service Buses A, AA, B, and BB Breaker Control Power
4160 VAC Station Service Buses C and D Supply Breaker Control Power
Main Gen Exctr Field Breaker Cntl Power
Cond Bstr Pumps Trip on Loss of Suction Press Logic
Main Gen Exctr Cntl Pwr Exctr Field Brkr Protection
Gen Rectifier Temp Control
RFPT B Relay Logic
Auto Fast Transfer Logic for 4160 Buses A, B, C and D
Main Xfmr Fault Prot
RFPT Main Turbine Trip Auxiliary Relays
480/277V Ltg Swgr Bus A Supply Brkr Control Power
208V Swgr Bus A Breaker Control Power
4160 VAC ACB Test Cabinet (R22-S024A)
Condensate Polishing Annunciator Panel
Unit Auxiliary Xfmr A - B Fault Press Trip Alarm
Startup Transformer C - D Fault Press Trip Alarm
Gen Hydrogen Stator Clg Trips - Alarms Aux Relays
Generator - Excitation Relays at N51-S002
EHC Turbine Annunciator Relay Control Power
Fire Protection Deluge Values for Filter Vent 1243-D013 (Unit 1 only)
Alternate Control Power for MG Set 1A (1B31) (Unit 1 only)
H_2 Recombiner Breaker Control Power (Unit 1 only)

TABLE 2
LOADS OFF DC DISTRIBUTION SYSTEMS

125 VDC Essential Division I Cabinet D (1R25-S105) (2R25-S129)

ECCS Cabinet H11-P925 Power Supply (ESS Div I)
ECCS Cabinet H11-P925 Power Supply (ESS Div I)
ECCS Cabinet H11-P927 Power Supply (ESS Div I)
ECCS Cabinet H11-P927 Power Supply (ESS Div I)
DC Power Supply for ERF Digital Isolation Panel "X75-P200A"
Main and Aux Transformer Annunciator (Unit 1 only)
Fire Protection Computer/Cable Spreading Room as Control Building CO_2 (Unit 1 only)

125 VDC Essential Division I Cabinet D (1R25-S105) (2R25-S129)

ECCS Cabinet H11-P926 Power Supply (ESS Div II)
ECCS Cabinet H11-P226 Power Supply (ESS Div II) (Unit 1 only)
ECCS Cabinet H11-P928 Power Supply (ESS Div II)
ECCS Cabinet H11-P928 Power Supply (ESS Div II) (Unit 1 only)
DC Power Supply for ERF Digital Isolation Panel "X75-P200B"

62. 295005AA1.05 001

Unit 2 was operating at 100% RTP when the reactor scrammed due to a turbine trip from high vibrations.

Which ONE of the following describes the correct turbine valve response?

A. Turbine Stop Valves - Closed
Turbine Control Valves - Closed
Intercept Valves - Closed
Intermediate Stop Valves - Open
Bypass Valves - One or more may be open depending on throttle pressure

B. Turbine Stop Valves - Closed
Turbine Control Valves - Open
Intercept Valves - Closed
Intermediate Stop Valves - Closed
Bypass Valves - All open initially; close to control Rx pressure.

C. Turbine Stop Valves - Closed
Turbine Control Valves - Closed
Intercept Valves - Open
Intermediate Stop Valves - Closed
Bypass Valves - One or more may be open depending on throttle pressure

D. Turbine Stop Valves - Closed
Turbine Control Valves - Closed
Intercept Valves - Closed
Intermediate Stop Valves - Closed
Bypass Valves - All open initially; close to control Rx pressure.

References: SI-LP-01901-00 Rev. 3 pg 44-46 of 79
SI-LP-01701-00 Rev. SI-00 pg 17 of 36
EO 019.010.a.01

A. Incorrect since all valves close except bypass valves on a turbine trip from Hi vibes.

B. Incorrect since all valves close except bypass valves on a turbine trip from Hi vibes.

C. Incorrect since all valves close except bypass valves on a turbine trip from Hi vibes.

D. Correct answer.

QUESTIONS REPORT
for HT2002

RO Tier:	T1G1	SRO Tier:	T1G2
Keyword:	TURBINE TRIP	Cog Level:	MEM 3.6/3.6
Source:	N	Exam:	HT02301
Test:	C	Misc:	TCK

36. 295005AA1.05 001

Unit 2 was operating at 100% RTP when the reactor scrammed due to a turbine trip from high vibrations. Choose to correct turbine valve response if everything operates as designed.

A. Turbine Stop Valves - Closed
Turbine Control Valves - Closed
Intercept Valves - Closed
Intermediate Stop Valves - Open
Bypass Valves - One or more may be open depending on throttle pressure

B. Turbine Stop Valves - Closed
Turbine Control Valves - Open
Intercept Valves - Closed
Intermediate Stop Valves - Closed
Bypass Valves - All open initially; close to control Rx pressure.

C. Turbine Stop Valves - Closed
Turbine Control Valves - Closed
Intercept Valves - Open
Intermediate Stop Valves - Closed
Bypass Valves - One or more may be open depending on throttle pressure

D. Turbine Stop Valves - Closed
Turbine Control Valves - Closed
Intercept Valves - Closed
Intermediate Stop Valves - Closed
Bypass Valves - All open initially; close to control Rx pressure.

References: SI-LP-01901-00 Rev. 3 pg 44-46 of 79
SI-LP-01701-00 Rev. SI-00 pg 17 of 36
EO 019.010.a.01

A. Incorrect since all valves close except bypass valves on a turbine trip from Hi vibes.

B. Incorrect since all valves close except bypass valves on a turbine trip from Hi vibes.

C. Incorrect since all valves close except bypass valves on a turbine trip from Hi vibes.

D. Correct answer.

16. Given plant conditions, DETERMINE how a failure of any of the following will affect the EHC System. (019.003.a.04)

    a. Electrical Power sources
    b. Instrument Air Systems
    c. Plant Service Water Systems

17. Given a drawing of the EHC Logic Block Diagram, EXPLAIN the response of the Main Turbine when the OVERSPEED TEST pushbutton is depressed. (017.026.a.01)

18. Given a copy of EHC Logic Block Diagram, IDENTIFY the EHC System response to any of the following designated conditions: (019.010.a.01)

    a. Operator depressed 1800 speed select pushbutton.
    b. Main turbine trips while at rated condition.
    c. Load Limit or Maximum Combined Flow Limit pot. is continuously decreased.
    d. Loss of stator cooling runback occurs.
    e. Load Reject occurs.
    f. One or both pressure regulators fail upscale.
    g. One or both pressure regulators fail downscale.

19. Given a copy of EHC Logic Block Diagram, IDENTIFY the response of the following components and parameters to an adjustment of the EHC pressure regulator: (019.010.a.02)

    a. Main Turbine Control Valves
    b. Main Turbine Bypass Valves
    c. RPV Pressure
    d. Reactor Power

20. Given a drawing of the EHC Logic Block Diagram, EXPLAIN how load is increased and decreased on the Main Turbine Generator. (017.032.b.01)

21. EXPLAIN how the operator positions the internal bypass valve on #2 Turbine Stop Valve to perform Shell warming. (017.017.a.02)

11. Loss of DC control power to EHC,

12. Moisture Separator Reheater high level, any water in MSR,

13. Electrical faults in Main Generator and Transformers,

14. Failure to meet the Turbine runback amperage limits within specified time. 2 out of 3 trip; switches and indicating lights on local panel N43-P001. Turbine Runbacks are caused by one of two things:

    a. Stator Cooling Water high temperature of 81°C,

    OR

    b. Stator Cooling Water low pressure of 26.4 psig

    The load reduction which takes place is dependent upon Generator Loading:

    If generator load is greater than 19,080 amps, Generator load must be reduced to less than 15,000 amps in 2 minutes and less than 4,500 amps in 3.5 minutes.

    If generator load is less than 19,080 amps, generator load must be reduced to less than 4,500 amps in 3.5 minutes.

    - Failure to meet **EITHER** of these runback requirements will result in a turbine trip.

15. Local manual trip at the turbine front standard.

16. Remove Manual trip in Control Room.

VI. Integrated System Response

A. EHC System

1. Upon a Turbine trip, the EHC System will:

    a. Actuate fast acting solenoids for closure of the following valves:

        1) Main Turbine Stop,

2) Main Turbine Control,

3) Combined Intermediate,

4) Extraction Non-Return Check.

b. Fast acting solenoids also cause the Bypass Valves to open to control Reactor pressure if above the pressure setpoint.

c. Initiate signal to the Reactor Protection System to scram the Reactor if Main Turbine First Stage Pressure indicates greater than 30% power level.

d. Signals EOC RPT breakers to trip which causes the Recirc Pumps to trip, if Main Turbine First Stage pressure indicates greater than 30% power level (normally bypassed per 34SO-B31-003).

B. Load Rejects

Load Reject - If the generator loses electrical load, the Turbine Control valves and Intercept Valves must be quickly closed to prevent overspeed.

Power to load imbalance circuit compares Generator amps with cold reheat pressure (proportional to turbine load).

1. Upon a load reject, the EHC System will:

a. Actuate the fast acting solenoid for closure of the following valves:

1) Main Turbine Control Valves,

2) Intercept Control Valves.

b. Fast acting solenoids also cause the Bypass Valves to open to control Reactor pressure if above the pressure setpoint.

c. Removes load reference signal causing intercept valves to close.

d. Run load reference motor back to no load position.

e. Prevents load reference motor from being run in increased load direction.

e. When the ISV is 10% open, its fast-acting solenoid will energize, fast-closing the ISV.

f. When the test pushbutton is released, the ISV will stroke open at its normal rate.

g. When the ISV is 90% open, its associated IV will stroke open at its normal rate.

Q. Valve Positions for Various Turbine Conditions

1. Main Turbine tripped while at rated conditions.

   a. Turbine Stop Valves - Closed

   b. Turbine Control Valves - Closed

   c. Intercept Valves - Closed

   d. Intermediate Stop Valves - Closed

   e. Bypass Valves - All open; will throttle down as throttle pressure decreases.

2. Main Turbine reset with ALL VALVES CLOSED selected.

   a. Turbine Stop Valves - Closed

   b. Turbine Control Valves - Closed

   c. Intercept Valves - Closed

   d. Intermediate Stop Valves - Open

   e. Bypass Valves - One or more may be open depending on throttle pressure.

3. Main Turbine reset with 1800 RPM selected and generator output breaker open.

   a. Turbine Stop Valves - Open

   b. Turbine Control Valves - Throttled open approximately 3% to maintain 1800 RPM.

c. Intercept Valves - Open

d. Intermediate Stop Valves - Open

e. Bypass Valves - One or more may be open depending on throttle pressure.

4. Main Turbine reset with generator fully loaded

a. Turbine Stop Valves - Open

b. Turbine Control Valves - Throttles open approximately 60% to maintain 100% steam flow to turbine.

c. Intercept Valves - Open

d. Intermediate Stop Valves - Open

e. Bypass Valves - Closed

5. Shell Warming

a. Turbine Stop Valves - Closed

- Bypass valve on #2 TSV throttled open.

b. Turbine Control Valves - Open

c. Intercept Valves - Closed

d. Intermediate Stop Valves - Closed

e. Bypass Valves - One or more may be open depending on throttle pressure.

6. Chest Warming

a. Turbine Stop Valves - Closed

- Bypass valve on #2 TSV throttled open.

b. Turbine Control Valves - Closed

c. Intercept Valves - Closed

d. Intermediate Stop Valves - Open

e. Bypass Valves - One or more may be open depending on throttle pressure.

VI. Integrated System Response

A. Turbine Response to a Reactor Scram

1. After the reactor is scrammed, the turbine continues to operate, acting as a heat sink for the energy remaining in the reactor (decay heat and stored heat).

2. As stored energy decreases, steam production decreases, causing throttle pressure to decrease.

3. As throttle pressure decreases, the pressure regulators will throttle down on the TCVs to maintain pressure.

4. Turbine load will continue to decrease as the TCVs close to maintain pressure

5. When turbine load reaches 80 MWe, the Operator should trip the Main Turbine, and verify the BPVs open to maintain pressure.

B. Turbine Response to a Turbine Trip at 100% Load

1. The Hydraulic Trip system will depressurize the ETS header which will activate the hydraulic lock-in signal, close all Extraction Non-Return Valves, and depressurize the FASTC header. With the ETS and FASTC headers depressurized, the disk dump valves on all turbine steam valves will open, bleeding off the FAS pressure inside their control pacs.

2. All TSVs, TCVs, IVs, and ISVs will immediately go closed and the turbine coasts down.

3. A reactor scram signal will be generated on both TSV and TCV fast closure.

4. The BPVs will open fully in an attempt to control pressure.

7. 295006AK3.01 002

Unit 2 was operating at 100% RTP when a scram occurred from a spurious Group 1 isolation.

Which ONE of the following describes the expected initial Reactor Water Level response and the reason for that response? (Assume no operator actions occur)

A.✓ Reactor water level will decrease due to collapsing of voids and then will increase due to feedwater injection.

B. Reactor water level will increase due to feedwater injection still at 100% and then will decrease due to level setpoint at scram setpoint.

C. Reactor water level will decrease due to feedwater level control at scram setpoint and then increase due to Startup Level Control Valve (SULCV) leakby.

D. Reactor water level will decrease due to SRV's opening and then will increase due to feedwater injection.

Reference: FSAR 15.2.3.6.2.1

A. Correct answer. Voids collapse due to initial pressure transient.

B. Incorrect since level initially decreases from collapsing of voids.

C. Incorrect since level is below the scram setpoint for feedwater from the initial void collapse.

D. Incorrect since level initially increases from swell.

RO Tier:	T1G1	SRO Tier:	T1G1
Keyword:	REACTOR WATER LEVEL	Cog Level:	C/A 3.8/3.9
Source:	N	Exam:	HT02301
Test:	C	Misc:	TCK

16. 295006AK3.01 002

Unit 2 was operating at 100% RTP when a scram occurred from a spurious Group 1 isolation.

Which ONE of the following describes the expected Reactor Water Level response and the reason for that response? (Assume no operator actions occur)

A. Reactor water level will decrease due to collapsing of voids and then will increase due to feedwater injection.

B. Reactor water level will increase due to feedwater injection still at 100% and then will decrease due to level setpoint at scram setpoint.

C. Reactor water level will decrease due to feedwater level control at scram setpoint and then increase due to Startup Level Control Valve (SULCV) leakby.

D. Reactor water level will decrease due to SRV's opening and then will increase due to feedwater injection.

Reference: FSAR 15.2.3.6.2.1

A. Correct answer. Voids collapse due to initial pressure transient.

B. Incorrect since level initially decreases from collapsing of voids.

C. Incorrect since level is below the scram setpoint for feedwater from the initial void collapse.

D. Incorrect since level initially increases from swell.

RO Tier:	T1G1	SRO Tier:	T1G1
Keyword:	REACTOR WATER LEVEL	Cog Level:	C/A 3.8/3.9
Source:	N	Exam:	HT02301
Test:	C	Misc:	TCK

63. 295006AK3.01 002

Unit 2 was operating at 100% RTP when a scram occurred from a spurious Group 1 isolation.

Which ONE of the following describes the expected Reactor Water Level response and the reason for that response? (Assume no operator actions occur)

A. Reactor water level will decrease due to collapsing of voids and then will increase due to feedwater injection.

B. Reactor water level will increase due to feedwater injection still at 100% and then will decrease due to level setpoint at scram setpoint.

C. Reactor water level will decrease due to feedwater level control at scram setpoint and then increase due to feedwater reg valve leakby.

D. Reactor water level will decrease due to pressure spike and then will increase due to feedwater injection.

Reference: FSAR 15.2.3.6.2.1

A. Correct answer. Voids collapse due to initial pressure transient.

B. Incorrect since level initially decreases from collapsing of voids.

C. Incorrect since level is below the scram setpoint for feedwater from the initial void collapse.

D. Incorrect since level initially decreases from collapsing of voids.

RO Tier:	T1G1	SRO Tier:	T1G1
Keyword:	REACTOR WATER LEVEL	Cog Level:	C/A 3.8/3.9
Source:	N	Exam:	HT02301
Test:	C	Misc:	TCK

QUESTIONS REPORT
for HT2002

1. 295006AK3.01 002

Unit 2 was operating at 100% RTP when a scram occurred from a spurious Group 1 isolation. CHOOSE the answer that describes the expected Reactor Water Level response and the reason for that response. Assume no operator actions occur.

A.✓ Reactor water level will decrease due to collapsing of voids and then will increase due to feedwater injection.

B. Reactor water level will increase due to feedwater injection still at 100% and then will decrease due to level setpoint at scram setpoint.

C. Reactor water level will decrease due to feedwater level control at scram setpoint and then increase due to feedwater reg valve leakby.

D. Reactor water level will increase due to collapsing of voids and then will decrease due to level setpoint at scram setpoint.

Reference: FSAR 15.2.3.6.2.1

A. Correct answer. Voids collapse due to initial pressure transient.

B. Incorrect since level initially decreases from collapsing of voids.

C. Incorrect since level is below the scram setpoint for feedwater from the initial void collapse.

D. Incorrect since level initially decreases from collapsing of voids.

15.2.3.6.1 Identification of Causes

Various malfunctions or operator actions can initiate MSIV closure. Examples are:

- Low steam line pressure.
- High steam line flow.
- Low water level.
- Manual action.

15.2.3.6.1.1 **Starting Conditions and Assumptions.** The reactor was initially operating at rated conditions (2763 MWt) with an RPV dome pressure of 1035 psig.

15.2.3.6.1.2 **Event Description.** As MSIVs close, position switches on the valves initiate a reactor scram when the valves on three or more MSLs are < 90% open and the reactor mode switch is in the RUN position. Protection system logic permits the test closure of one valve without initiating a reactor scram.

15.2.3.6.2 Analysis of Effects and Consequences

15.2.3.6.2.1 **Methods, Assumptions, and Conditions.** For the power uprate analysis, the transient analysis methods described in subsection 15.1.7 were used. The key analysis input parameters are identified in table 15.2-3.

For the MSIVD analysis, the following assumptions and conditions were used:

A. The closure of all MSIVs initiates the event.

B. The MSIVs close in 3 to 5 s. The worst case, the 3-s closure time, is assumed.

C. Position switches on the MSIVs initiate a reactor scram when the valves are < 90% open. MSIV closure inhibits steam flow to the feedwater turbines, terminating feedwater flow.

D. Valve closure indirectly causes a trip of the main turbine and generator, but late enough into the event so that no significant impact occurs.

Following the initial drop in RPV water level due to void collapse, which results from the initial pressure transient, water level is recovered. The recovery arises from the pressure-reducing action of the SRVs and the fact that some feedwater is still entering the RPV following isolation. The transient water level on recovery

may be sufficiently high to produce a TSV trip on high water level. If a TSV trip occurs, it will occur ~ 6 to 8 s following the initial MSIV closure and will not impact the event.

E. Because of the loss of feedwater flow, RPV water level is eventually decreased sufficiently to initiate an RPT and operation of the HPCI and RCIC systems.

15.2.3.6.2.2 Results and Consequences. The results and consequences for an MSIVD event are provided below:

A. Analysis Results

Figure 15.2-11 shows the plant response to an MSIVD event. The analysis results are provided in table 15.2-1.

B. Fission Product Released from the Fuel

The activity released is related to the activity in the reactor coolant and the activity released as a consequence of a reactor scram and an RPV depressurization from any fuel defects that existed prior to the event.

C. Activity Released to the Environment

The activity released during this event is contained in the RPV and the suppression pool. Very little activity is released to the environment.

D. Radiological Effects

The offsite doses resulting from this event are inconsequential.

15.2.3.6.2.3 Consideration of Uncertainties. Uncertainties in the analysis of MSIV closure include all the factors identified for the TTNBP event in paragraph 15.2.3.3.2.3. An additional variation is the closure time of the MSIVs. The time assumed in this analysis is 3 s, the fastest, and thereby the most conservative, closure time allowed by the Technical Specifications.

15.2.3.7 Closure of One MSIV (Event 11)

This evaluation, which was performed for the initial core for the original rated conditions (2436 MWt), demonstrated the closure of one MSIV event is a nonlimiting AOO and does not require reevaluation for reloads.

Only one isolation valve at a time is permitted to be closed for testing purposes. This precludes a reactor scram from the position switch signals. Normal test procedure requires an initial power reduction to ~ 80 to 90% of design conditions to avoid a high-flux scram, a high-pressure scram, or full isolation from high steam flow in the steam lines. With a 3-s closure of one MSIV

65. 295007AA1.04 001

Unit 1 scrammed due to a Group 1 isolation from high main steam line flow. The following conditions exist:

All rods inserted	
Reactor Pressure	1090 psig
Reactor Water Level	+54 inches
Drywell Pressure	1.5 psig
Torus Level	150 inches

The operator has opened SRV 1B21-F013G to lower reactor pressure.

Which ONE of the following describes how reactor pressure will be controlled after the operator closes SRV 1B21-F013G?

A. Reactor pressure will be automatically controlled by the EHC system using the Turbine Bypass Valves.

B. Reactor pressure will be manually controlled by the operator using HPCI with a suction from the condensate storage tank.

C. Reactor pressure will be automatically controlled by the Low Low Set system between 847 and 1033 psig.

D. Reactor pressure will be manually controlled using the Reactor Feed Pump turbines.

References: 34AR-603-114-1S Rev. 6, Reactor High Pressure
RC RPV CONTROL (NON-ATWS) Rev. 7
SI-LP-01401 Rev. 00 Table 4
SI-LP-00501 Rev. 01 Table 6

A. Incorrect since the MSIV's are closed from a valid isolation signal and cannot be reopened.

B. Incorrect since HPCI cannot be used due to high water level isolation signal.

C. Correct answer.

D. Incorrect since the MSIV's are closed from a valid isolation signal and cannot be reopened.

QUESTIONS REPORT
for HT2002

RO Tier:	T1G1	SRO Tier:	T1G1
Keyword:	LOW LOW SET	Cog Level:	C/A 3.9/4.1
Source:	N	Exam:	HT02301
Test:	C	Misc:	TCK

QUESTIONS REPORT
for HT2002

1. 295007AA1.04 001

Unit 1 scrammed due to a Group 1 isolation from high main steam line flow. The following conditions exist:

All rods inserted	
Reactor Pressure	1090 psig
Reactor Water Level	+54 inches
Drywell Pressure	1.5 psig
Torus Level	150 inches

The operator has opened SRV 1B21-F013G to lower reactor pressure.

Which ONE of the following describes how reactor pressure will be controlled after the operator closes SRV 1B21-F013G?

A. Reactor pressure will be controlled by the EHC system using the Turbine Bypass Valves.

B. Reactor pressure will be manually controlled by the operator using HPCI with a suction from the condensate storage tank.

C. Reactor pressure will be automatically controlled by the Low Low Set system between 847 and 1033 psig.

D. Reactor pressure will be manually controlled using the Reactor Feed Pump turbines.

References: 34AR-603-114-1S Rev. 6, Reactor High Pressure
RC RPV CONTROL (NON-ATWS) Rev. 7
SI-LP-01401 Rev. 00 Table 4
SI-LP-00501 Rev. 01 Table 6

A. Incorrect since the MSIV's are closed from a valid isolation signal and cannot be reopened.

B. Incorrect since HPCI cannot be used due to high water level isolation signal.

C. Correct answer.

D. Incorrect since the MSIV's are closed from a valid isolation signal and cannot be reopened.

TABLE 4

SYSTEM INITIATIONS

1. ADS - 7 SRVs open on High Drywell Press and Low Reactor Level.

2. LLS - 4 SRVs are armed, and then cycle as follows

   A. Armed:

      (1) Reactor Pressure greater than 1080 PSIG
      (2) Tailpipe pressure greater than or equal to 85 PSIG

   B. Cycle

Valve	Open	Close
1) 2B21-F013B	997	851
2) 2B21-F013G	1012	866
3) 2B21-F013F	1027	881
4) 2B21-F013D	1036	890
5) 1B21-F013H	993	847
6) 1B21-F013A	1008	862
7) 1B21-F013G	1023	877
8) 1B21-F013C	1033	887

3. SRVs lift mechanically and electrically on overpressure as follows:

   - 2B21-F013 (all) 1150 psig
   - 1B21-F013 (all) 1150 psig

TRIPS AND SETPOINTS
TABLE 6

Unit 1 and Unit 2 HPCI Turbine Trips:

1. Turbine Over-speed (mechanical) 5000 rpm (125%).
2. Turbine exhaust press high 140 psig.
3. Pump suction press low 10" Hg Vac.
4. Reactor Water level high +51.7" (51.5" Unit 1).
5. Any auto system isolation.
6. Manual trip pushbutton on H11-P601 is used to trip the turbine from the Control Room if a malfunction should occur or to secure the system after operation.
7. Local manual trip.

HPCI System Response to Turbine Trips:

1. Turbine Stop Valve closes.
2. Injection Valve (F006) closed when Turbine Stop Valve fully closed.
3. Minimum Flow Valve (F012) interlocked closed when Turbine stop Valve fully closed.
4. Auxiliary Oil Pump auto-starts at 39 psig oil pressure.

Reactor Water Level High Trip Difference:

1. Valves can be reopened after the high water level condition clears (by pushing reset button).
2. Will auto-open on receiving another low water level initiation signal.

IF EMERGENCY DEPRESS IS, OR HAS BEEN, REQUIRED	THEN perform Emergency Depress
IF RWL CANNOT be determined	THEN perform RPV Flooding
IF drywell pressure is above 1.85 psig	THEN prevent injection from CS and LPCI pumps per 31EO-EOP-114-1S EXCEPT when required for adequate core cooling

CS shut
LPCI sh

D

IF ANY SRV is cycling on its relief setpoint

THEN manually open SRVs
UNTIL
reactor pressure is below 960 psig
use sequence listed in Table 1

→ setpoint is 1150#

WHILE PERFORMING THE FOLLOWING	
IF torus water temperature CANNOT be maintained below the Heat Capacity Temperature Limit (Graph 2)	THEN maintain reactor pressure below the limit, irrespective of the resulting cooldown rate.
IF torus water level CANNOT be maintained below the SRV Tail Pipe Level Limit (Graph 6)	THEN maintain reactor pressure below the limit, irrespective of the resulting cooldown rate.
IF STEAM COOLING IS REQUIRED	THEN perform Steam Cooling

E

D

3 4 5

Stabilize reactor pressure below 1080 psig with main turbine bypass valves. If desired use one or more of the following:

- Low Low Set
  If necessary, allow reactor pressure to exceed 1080 psig then OPEN any SRV to initiate LLS
- Alternate Reactor Pressure Control System(s) in Table 1 per 31EO-EOP-107-1S

F

WAIT UNTIL

a reduction in reactor pressure will NOT complicate RWL control

Begin reactor pressure reduction per 34GO-OPS-013-1S
AND
maintain the cooldown rate below 100 °F/hr, defeating isolation interlocks and restoring drywell pneumatics if necessary per 31EO-EOP-100-1S

G

IF one or more SRVs are being used to depressurize the RPV
AND
continuous SRV pneumatic supply is or becomes unavailable,

THEN depressurize with sustained SRV opening.

NOTE 5

Sustained opening is prolon
opening that limits the numb
times an SRV is cycled witho
exceeding the cooldown rat

C

WAIT UNTIL

reactor pressure
is below 138 psig

Continue to cool down to cold shutdown

GO TO CP-1
point F

THEN use Table 9 system(s)
per 31EO-EOP-110-1S

WHILE PERFORMING THE FOLLOWING

IF RWL CANNOT be restored and maintained above -155 in.

THEN perform Alternate Level Control

IF the ADS timer has initiated

THEN inhibit ADS

Table 1 ALTERNATE REACTOR PRESSURE CONTROL SYSTEM(S) 3 4 5

- SRVs ONLY when torus water level is above +63 in., defeating pneumatic supply isolation interlocks and restoring the pneumatic supply if necessary per 31EO-EOP-100-1S:
  Preferred sequence: G, D, L, H, E, F, A, J, K, C, B.
  If continuous SRV pneumatic supply is or becomes unavailable, place each SRV control switch in CLOSE or AUTO.
- HPCI with suction from the condensate storage tank if available.
- RCIC with suction from the condensate storage tank if available.
- Other steam driven equipment:
  -SJAEs
  -RFPTs
  -Main turbine chest warming
  -HPCI drains
  -RCIC drains
- RWCU (recirculation mode), bypassing filter/demineralizers.
- MSL drains
- RWCU (blowdown mode), only if boron has NOT been injected OR it has been determined that a cold shutdown rod configuration exists; consult with Plant Chemistry prior to initiating blowdown.

NOTE 5

Sustained opening is prolonged opening that limits the number of times an SRV is cycled without exceeding the cooldown rate

Table 2 RC/L INJECTION SYSTEM(S) 3 4 5

- Condensate/feedwater per 34SO-N21-007-1S
- CRD per 34SO-C11-005-1S
- RCIC, with suction from the condensate storage tank if available, per 34SO-E51-001-1S. If necessary, defeat any or all of the following:
  -high torus water level suction transfer logic per 31EO-EOP-100-1S
  -low reactor pressure isolation per 31EO-EOP-100-1S
  -high area temperature isolation per 31EO-EOP-100-1S
- HPCI, with suction from the condensate storage tank if available, per 34SO-E41-001-1S. If necessary, defeat one or both of the following:
  -high torus water level suction transfer logic per 31EO-EOP-100-1S
  -high area temperature isolation per 31EO-EOP-100-1S
- Core Spray per 34SO-E21-001-1S
- LPCI, with injection through the heat exchangers as soon as possible per 34SO-E11-010-1S

Table 9 ALTERNATE INJECTION SUBSYSTEM(S)

- RHR Crosstie
- Fire System
- ECCS Keep-Full

1

RWL instrument ma
- there is no indica
- the instrument re reference leg ma

See 34AB-B21-002

2

1B21-LI-R604A(B)
determine RWL du

1.0 IDENTIFICATION:

ALARM PANEL 603-1

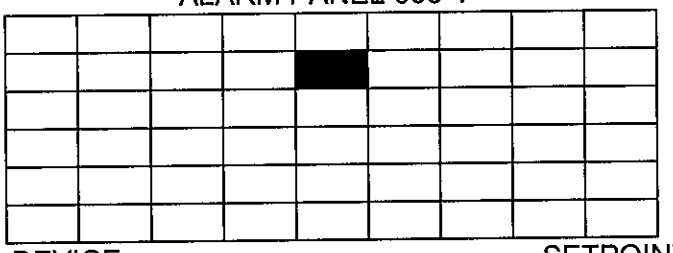

REACTOR

PRESSURE

HIGH

DEVICE:
1C32-R608

SETPOINT:
1055 PSIG increasing

2.0 CONDITION:

Reactor vessel pressure is at OR above 1055 PSIG.

3.0 CLASSIFICATION:
AUXILIARIES

4.0 LOCATION:
1H11-P603 Panel 603-1

5.0 OPERATOR ACTIONS:

5.1 Confirm validity of the alarm using any of the following Panel 1H11-P603 indicators:

5.1.1 1C32-R609, Rx Press/Turb Stm Flow Recorder.

5.1.2 1C32-R605C, Rx Press indicator.

5.2 Reduce power to prevent further pressure increase per 34G0-OPS-005-1S, Power Changes.

5.3 IF the MSIVs are open, reduce pressure by lowering the pressure control setpoint.

5.4 IF the MSIVs are closed, REDUCE pressure by:

5.4.1 Utilizing the main steam line drains to the main condenser

5.4.2 RUNNING the HPCI or RCIC systems in the Reactor Pressure Control Mode

NOTE

Opening of any one SRV with reactor pressure > 1080 psig will activate the low-low set (LLS) logic. The logic once activated will open all four LLS-Manual SRV's, 1B21-F013A, C, G, H. These valves will open and close automatically to maintain pressure between 1033 and 847 psig.

5.4.3 Manually operating the safety relief valves

6.0 CAUSES:

6.1 MSIV closure
6.2 Pressure control setpoint set to high
6.3 EHC System malfunction

7.0 REFERENCES

7.1 H-17842 thru H-17845, Feedwater Control System Elementary
7.2 SX-19355 thru SX-19395, ATTS Elementary
7.3 57CP-CAL-029-0S, GE/RMAX/BAILEY/RECORDERS

8.0 TECH. SPEC./LCO:

N/A - Not applicable to this procedure

66. 295008AK3.01 001

Which ONE of the following is the reason that the Main Turbine receives a trip signal if the RPV experiences a high water level condition?

A. Protects the turbine from damage due to water entering the turbine.

B. Protects the main steam piping from damage due to water hammer.

C. Initiates an anticipatory reactor scram due to the simultaneous trip of the reactor feedwater pump.

D. Protects the turbine control and stop valves from damage due to water impingement.

Reference: Tech Spec Bases B 3.3.2.2, Feedwater and Main Turbine High Water Level Trip Instrumentation (Background).

A. Correct answer.

B. Incorrect since the turbine trip may cause water hammer in piping due to stop valves going closed.

C. Incorrect since the turbine trip does not perform an anticipatory scram function.

D. Incorrect since the valves closing may be subject to water hammer if the water level continues to increase.

RO Tier:	T1G2	SRO Tier:	T1G2
Keyword:	MAIN TURBINE	Cog Level:	MEM 3.4/3.5
Source:	N	Exam:	HT02301
Test:	C	Misc:	TCK

QUESTIONS REPORT
for HT2002

1. 295008AK3.01 001

The reason that the Main Turbine trips on high reactor water level is:

A. Protects the turbine from damage due to water entering the turbine.

B. Protects the main steam piping from damage due to water hammer.

C. Initiates a reactor scram in anticipation of low water level due to reactor feedwater pump trip.

D. Protects the turbine control and stop valves from damage due to water impingement.

Reference: Tech Spec Bases B 3.3.2.2, Feedwater and Main Turbine High Water Level Trip Instrumentation (Background).

A. Correct answer.

B. Incorrect since the turbine trip may cause water hammer in piping due to stop valves going closed.

C. Incorrect since the turbine trip does not perform an anticipatory scram function.

D. Incorrect since the valves closing may be subject to water hammer if the water level continues to increase.

B 3.3 INSTRUMENTATION

B 3.3.2.2 Feedwater and Main Turbine High Water Level Trip Instrumentation

BASES

BACKGROUND

The feedwater and main turbine high water level trip instrumentation is designed to detect a potential failure of the Feedwater Level Control System that causes excessive feedwater flow.

With excessive feedwater flow, the water level in the reactor vessel rises toward the high water level setpoint, causing the trip of the two feedwater pump turbines and the main turbine.

Reactor Vessel Water Level - High signals are provided by level sensors that sense the difference between the pressure due to a constant column of water (reference leg) and the pressure due to the actual water level in the reactor vessel (variable leg). Three channels of Reactor Vessel Water Level - High instrumentation are provided as input to a two-out-of-three initiation logic that trips the two feedwater pump turbines and the main turbine. The channels include electronic equipment (e.g., trip relays) that compare measured input signals with pre-established setpoints. When the setpoint is exceeded, the channel output relay actuates, which then outputs a main feedwater and turbine trip signal to the trip logic.

A trip of the feedwater pump turbines limits further increase in reactor vessel water level by limiting further addition of feedwater to the reactor vessel. A trip of the main turbine and closure of the stop valves protects the turbine from damage due to water entering the turbine.

APPLICABLE SAFETY ANALYSES

The feedwater and main turbine high water level trip instrumentation is assumed to be capable of providing a turbine trip in the design basis transient analysis for a feedwater controller failure, maximum demand event (Ref. 1). The high level trip indirectly initiates a reactor scram from the main turbine trip (above 28% RTP) and trips the feedwater pumps, thereby terminating the event. The reactor scram mitigates the reduction in MCPR.

Feedwater and main turbine high water level trip instrumentation satisfies Criterion 3 of the NRC Policy Statement (Ref. 3).

(continued)

17. 295009AK1.05 002

Which ONE of the following is the main reason that RPV level is lowered during an ATWS condition?

A. Reduce reactor power by reducing the natural circulation driving head.

B. Reduce steam generation rate which reduces the moderator temperature.

C. Prevent thermal stratification which prevents localized power peaks.

D. Reduce reactor pressure which allows more injection from low pressure systems.

Reference: LR-LP-20327 Rev. 10 Pg 42 of 53
Revised correct answer IAW lesson plan.

A. Correct answer.

B, C or D. Incorrect answer.

RO Tier:	T1G1	SRO Tier:	T1G1
Keyword:	RPV	Cog Level:	MEM 3.3/3.4
Source:	B	Exam:	HT02301
Test:	C	Misc:	

67. 295009AK1.05 002

Which ONE of the following is the main reason that RPV level is lowered during an ATWS condition?

A. Reduce reactor power by decreasing head pressure.

B. Reduce steam generation rate which reduces the moderator temperature.

C. Prevent thermal stratification which prevents localized power peaks.

D. Reduce reactor pressure which allows more injection from low pressure systems.

Reference: LR-LP-20327 Rev. 07 Pg 9 of 53
Revised correct answer IAW lesson plan.

A. Correct answer.

RO Tier:	T1G1	SRO Tier:	T1G1
Keyword:	RPV	Cog Level:	MEM 3.3/3.4
Source:	B	Exam:	HT02301
Test:	C	Misc:	

QUESTIONS REPORT
for HT2002

1. 295009AK1.05 002

The main reason that RPV level is lowered during an ATWS condition is to:

A. Reduce driving head which reduces natural circulation.

B. Reduce steam generation rate which reduces the moderator temperature.

C. Prevent thermal stratification which prevents localized power peaks.

D. Reduce reactor pressure which allows more injection from low pressure systems.

Reference: LR-LP-20327 Rev. 07 Pg 9 of 53

(This question needs work or replaced)

- Lowering RWL reduces natural circulation driving head. This reduces core flow, thereby reducing reactor power and the heat rejection rate to the Torus.

- The reactor power reduction achieved by lowering RWL may be sufficient to reduce reactor power below the Boron Injection Initiation Temperature, thus ensuring that boron injection can be completed before the Heat Capacity Temperature Limit is reached.

- A RWL reduction which uncovers the feedwater spargers also has the beneficial effect of heating water injected into the RPV through the feedwater spargers. This minimizes core-inlet subcooling, thereby preventing or mitigating the occurrence of large irregular neutron flux oscillations induced by neutronic/thermal-hydraulic instabilities.

This process occurs as follows:

- The reactor is in a natural circulation mode following recirculation pump trip. The natural circulation driving head is a function of the fluid density difference between the regions inside and outside of the shroud (void fraction directly affects the fluid density inside the shroud) and the height of the fluid columns (RWL).

- As RWL is lowered, the height of the fluid columns is reduced, thereby reducing the natural circulation driving head.

- As the natural circulation driving head is reduced, the natural circulation flow through the core is reduced.

- The reduced core flow (natural circulation) results in a reduced rate of steam removal from the core.

- The reduced rate of steam removal results in an increased void fraction inside the shroud.

- The increased void fraction adds negative reactivity to the reactor.

18. 295009G2.4.1 001

Unit 2 has scrammed with a failure of all the control rods to insert. The following plant conditions exist:

Rx Power	8%
Rx Water Level	-50"
Drywell Pressure	3.5 psig
Torus Pressure	3.0 psig
Torus Temperature	141°F
LLS is armed	
ADS is Inhibited	

Which ONE of the following is an acceptable order from the Shift Supervisor? (Distribute copy of BIIT Curve Graph 5)

A. Maintain RWL between -60" and +50" using Condensate and Feedwater.

B. Terminate and prevent all injection except Boron, CRD and RCIC until RWL is below -60".

C. Terminate and prevent all injection except Boron, CRD and RCIC until RWL is below -60" and Rx Power remains below 5% OR RWL is at -155" OR DW press is <1.85 psig and SRV's remain closed and RWL is below -60".

D. Restore and maintain RWL between +3" and +50" using HPCI with a suction from the Condensate Storage Tank.

Reference: CP-3 ATWS Level Control
RC RPV Control
LR-20328 Rev. 06 RPV Control ATWS (RCA)

A. Incorrect since the overide conditions above this step have been met which send you to a terminate and prevent leg.

B. Incorrect since you meet all of the requirements for the overide to send you to another terminate and prevent leg.

C. Correct answer.

D. Incorrect since these actions are in RC RPV Control and not in the CP-3 ATWS Level Control procedure.

QUESTIONS REPORT
for Revision2 HT2002

RO Tier:	T1G1	SRO Tier:	T1G1
Keyword:	ATWS CONTROL	Cog Level:	C/A 4.3/4.6
Source:	M	Exam:	HT02301
Test:	C	Misc:	

68. 295009G2.4.1 001

Unit 2 has scrammed with a failure of all the control rods to insert. The following plant conditions exist:

Rx Power	8%
Rx Water Level	-50"
Drywell Pressure	3.5 psig
Torus Pressure	3.0 psig
Torus Temperature	141°F
LLS is armed	
ADS is Inhibited	

Which ONE of the following is an acceptable order from the Shift Supervisor?

A. Maintain RWL between -60" and +50" using Condensate and Feedwater.

B. Terminate and prevent all injection except Boron, CRD and RCIC until RWL is below -60".

C. Terminate and prevent all injection except Boron, CRD and RCIC until RWL is below -60" and Rx Power remains below 5% OR RWL is at -155" OR DW press is <1.85 psig and SRV's remain closed and RWL is below -60".

D. Restore and maintain RWL between +3" and +50" using HPCI with a suction from the Condensate Storage Tank.

Reference: CP-3 ATWS Level Control
RC RPV Control
LR-20328 Rev. 06 RPV Control ATWS (RCA)

A. Incorrect since the overide conditions above this step have been met which send you to a terminate and prevent leg.

B. Incorrect since you meet all of the requirements for the overide to send you to another terminate and prevent leg.

C. Correct answer.

D. Incorrect since these actions are in RC RPV Control and not in the CP-3 ATWS Level Control procedure.

RO Tier:	T1G1	SRO Tier:	T1G1
Keyword:	ATWS CONTROL	Cog Level:	C/A 4.3/4.6
Source:	M	Exam:	HT02301
Test:	C	Misc:	

41. 295009G2.4.1 001

Unit 2 has scrammed with a failure of all the control rods to insert. The following plant conditions exist:

Rx Power	8%
Rx Water Level	-50"
Drywerll Pressure	3.5 psig
Torus Pressure	3.0 psig
Torus Temperature	141 F
LLS is armed	
ADS is Inhibited	

An acceptable order from the Shift Supervisor would be:

A. Maintain RWL between -185" and +50" using Condensate and Feedwater.

B. Terminate and prevent all injection except Boron, CRD and RCIC until RWL is below -60".

C. Terminate and prevent all injection except Boron, CRD and RCIC until RWL is below -60" and Rx Power remains below 5% OR RWL is at -155" OR DW press is <1.85 psig and SRV's remain closed and RWL is below -60".

D. Restore and maintain RWL between +3" and +50" using HPCI with a suction from the Condensate Storage Tank.

Reference: CP-3 ATWS Level Control
RC RPV Control
LR-20328 Rev. 06 RPV Control ATWS (RCA)

A. Incorrect since the overide conditions above this step have been met which send you to a terminate and prevent leg.

B. Incorrect since you meet all of the requirements for the overide to send you to another terminate and prevent leg.

C. Correct answer.

D. Incorrect since these actions are in RC RPV Control and not in the CP-3 ATWS Level Control procedure.

71. 295012AA1.02 001

Unit 1 is operating at 50% RTP with all Drywell cooling units in AUTO. The following conditions exist in the Drywell :

CRD cavity area temperature	155°F
Recirc pump motor area	135°F
Vessel upper head area	178°F
Drywell average air temperature	149°F

Which ONE of the following describes which Drywell cooling fans should receive an auto start signal and which parameter provided that signal?

A. Fans B007A, B007B, B009A and B009B due to vessel upper head area high temperature.

B. Fans B007A, B007B, B008A and B008B due to CRD cavity area high temperature.

C. Fans B007A, B007B, B008A and B008B due to vessel upper head area high temperature.

D. Fans B008A, B008B, B009A and B009B due to Drywell average air high temperature.

References: SI-LP-01304 Rev. 01, pg. 16 & 17 of 53

A. Incorrect since drywell cooling fans do not start on vessel upper head area high temperature.

B. Correct answer.

C. Incorrect since drywell cooling fans do not start on vessel upper head area high temperature.

D. Incorrect since drywell cooling fans do not start on Drywell high average air temperature.

RO Tier:	T1G2	SRO Tier:	T1G2
Keyword:	DRYWELL COOLING	Cog Level:	C/A 3.8/3.8
Source:	N	Exam:	HT02301
Test:	C	Misc:	

QUESTIONS REPORT
for HT2002

1. 295012AA1.02 001

Unit 1 is operating at 50% RTP with all Drywell cooling fans in AUTO. The following conditions exist in the Drywell :

CRD cavity area temperature	155 F
Recirc pump motor area	135 F
Vessel upper head area	178 F
Drywell average air temperature	149 F

Which Drywell cooling fans should receive an auto start signal and which parameter provided that signal?

A. Fans B007A, B007B, B009A and B009B due to vessel upper head area high temperature.

B. Fans B007A, B007B, B008A and B008B due to CRD cavity area high temperature.

C. Fans B007A, B007B, B008A and B008B due to vessel upper head area high temperature.

D. Fans B008A, B008B, B009A and B009B due to Drywell average air high temperature.

References: SI-LP-01304 Rev. 01, pg. 16 & 17 of 53

A. Incorrect since drywell cooling fans do not start on vessel upper head area high temperature.

B. Correct answer.

C. Incorrect since drywell cooling fans do not start on vessel upper head area high temperature.

D. Incorrect since drywell cooling fans do not start on Drywell high average air temperature.

- Main lube oil pump: 600 VAC 2D through MCC 2R24-S012
- Aux lube oil pump: 600 VAC 2D through MCC 2R24-S012

C. The Demineralized Water Transfer System

- Supplies makeup water to the Primary Containment Chilled Water System, and also supplies water to the Chemical Addition Tank.

D. The Primary Containment Chilled Water:

- shares its Expansion Tank, Chemical Addition Tank and Chemical Feed Pump with the Reactor/Radwaste Building Chilled Water System.

V. CONTROL FEATURES & INTERLOCKS

Fig 01, 07

A. Unit 1 Drywell Cooling Units (1T47)

1. Control Room Panel 1H11-P657

   a. STOP/AUTO/RUN switches for #1 fans on cooling units B007A, 7B, 8A, 8B, 9A, and 9B.

   b. LOCA OVERRIDE switch for # 1 fans.

   c. CLOSE/NORM/OPEN switches for PSW isolation valves 1P41-F049 and F050.

2. Control Room Panel 1H11-P654

   a. STOP/AUTO/RUN switches for # 2 fans on cooling units B007A, 7B, 8A, 8B, 9A, and 9B.

   b. LOCA OVERRIDE switch for # 2 fans.

3. Trips and Interlocks

   a. All fans will trip on overcurrent conditions.

   b. All fans will trip on a **LOCA** (1.85 # in Drywell or -101" RWL) signal.

1) There are two LOCA override keylock switches, one for each group of fans, to allow the fans to be restarted with a LOCA signal present.

2) Fan #1 LOCA override switch is on panel 1H11-P657 in the Control Room.

3) Fan #2 LOCA override switch is on panel 1H11-P654 in the Control Room.

4) Only the fans on cooling units B007A, B007B, B008A and B008B have LOCA override capability.

5) The fans on cooling units B009A and B009B can not be restarted with a LOCA signal present.

c. The fans on cooling units B007A, B007B, B008A, and B008B will automatically start on high temperature in the CRD cavity (150°F) or low air flow (<68% of rated) out of their respective cooling unit when their switches are in auto.

d. In the auto position, the fans on cooling units B009A and B009B will automatically start on low flow (<70% of rated) only.

Fig 03, 08

B. Unit 2 Drywell Cooling Units (2T47)

1. Control Room Panel 2H11-P657

a. OFF/STANDBY/RUN switches for fans on cooling units B007A, 8A, 9A, and 10A.

b. OFF/AUTO/RUN switch for return air fan C001A.

c. OFF/RUN switch for return air fan C002A.

d. LOCA OVERRIDE switch for "A" fans.

e. CLOSE/NORM/OPEN switch for cooling unit B010A chilled water isolation valve 2P64-F163.

f. RESET pushbuttons for cooling units B007A, 7B, 8A, and 8B standby logic.

2. Control Room Panel 2H11-P654

19. 295013AK1.03 001

Unit 1 is operating at 75% RTP with Safety Relief Valve (SRV) "G" leaking to the Suppression Pool. All attempts to reseat the valve have failed. One RHR loop is operating in the Suppression Pool Cooling mode with Suppression Pool temperature at 111°F and increasing very slowly.

Which ONE of the following actions would the crew be expected to take?

A. Maximize torus cooling by placing the other RHR loop in operation and continue operating.

B. Depressurize the RPV to less than 200 psig within 12 hours.

C. Reduce THERMAL POWER until all OPERABLE IRM channels ≤ 25/40 divisions of full scale on Range 7 within 12 hours.

D. Place the reactor Mode Switch in the shutdown position immediately.

References: LR-LP-20201-13
Tech Spec Section 3.6.2.1 Suppression Pool Average Temperature
PC-1 Primary Containment Control

A. Incorrect since this action should have already been performed per PC-1 when Torus temperature went above 100°F.

B. Incorrect since this is the Tech Spec action if Torus temperature is ≥ 120°F.

C. Incorrect since this is the Tech Spec action if Torus temperature cannot be restored to ≤ 100°F within 24 hours but it is no longer applicable since the Condition has been exited when the temperature went >110°F.

D. Correct answer per Tech Spec 3.6.2.1 Condition D.

RO Tier:	T1G2	SRO Tier:	T1G1
Keyword:	SUPPRESSION POOL	Cog Level:	C/A 3.0/3.3
Source:	B	Exam:	HT02301
Test:	C	Misc:	

72. 295013AK1.03 001

Unit 1 is operating at 75% RTP with Safety Relief Valve (SRV) "G" leaking to the Suppression Pool. All attempts to reseat the valve have failed. One RHR loop is operating in the Suppression Pool Cooling mode with Suppression Pool temperature at 111°F and increasing very slowly.

Which ONE of the following actions would the crew be expected to take?

A. Maximize torus cooling by placing the other RHR loop in operation and continue operating.

B. Depressurize the RPV to less than 200 psig within 12 hours.

C. Reduce THERMAL POWER until all OPERABLE IRM channels ≤ 25/40 divisions of full scale on Range 7 within 12 hours.

D. Place the reactor Mode Switch in the shutdown position immediately.

References: LR-LP-20201-13
Tech Spec Section 3.6.2.1 Suppression Pool Average Temperature
PC-1 Primary Containment Control

A. Incorrect since this action should have already been performed per PC-1 when Torus temperature went above 100°F.

B. Incorrect since this is the Tech Spec action if Torus temperature is ≥ 120°F.

C. Incorrect since this is the Tech Spec action if Torus temperature cannot be restored to ≤ 100°F within 24 hours but it is no longer applicable since the Condition has been exited when the temperature went >110°F.

D. Correct answer per Tech Spec 3.6.2.1 Condition D.

RO Tier:	T1G2	SRO Tier:	T1G1
Keyword:	SUPPRESSION POOL	Cog Level:	MEM 3.0/3.3
Source:	B	Exam:	HT02301
Test:	C	Misc:	

43. 295013AK1.03 001

Unit 1 is operating at 75% RTP with Safety Relief Valve (SRV) "G" leaking to the Suppression Pool. All attempts to reseat the valve have failed. One RHR loop is operating in the Suppression Pool Cooling mode with Suppression Pool temperature at 111 F and increasing very slowly.

With respect to current plant conditions the crew should:

A. Maximize torus cooling by placing the other RHR loop in operation and continue operating.

B. Depressurize the RPV to less than 200 psig within 12 hours.

C. Reduce THERMAL POWER until all OPERABLE IRM channels ≤ 25/40 divisions of full scale on Range 7 within 12 hours.

D. Place the reactor Mode Switch in the shutdown position immediately.

References: LR-LP-20201-13
Tech Spec Section 3.6.2.1 Suppression Pool Average Temperature
PC-1 Primary Containment Control

A. Incorrect since this action should have already been performed per PC-1 when Torus temperature went above 100 F.

B. Incorrect since this is the Tech Spec action if Torus temperature is ≥ 120 F.

C. Incorrect since this is the Tech Spec action if Torus temperature cannot be restored to ≤ 100 F within 24 hours but it is no longer applicable since the Condition has been exited when the temperature went >110 F.

D. Correct answer per Tech Spec 3.6.2.1 Condition D.

20. 295013AK3.01 001

Unit 2 is operating at 100% RTP. The quarterly HPCI Flow Rate Test was just suspended with the following plant conditions:

Torus Cooling	Both loops in operation
Torus Temperature	105°F and increasing
Torus Level	149" and decreasing

Which ONE of the following describes the reason for suspending adding heat to the Suppression Pool per Tech Spec section 3.6.2.1?

A. Ensures primary containment design limits are not exceeded in the event of a LOCA.

B. Preserves heat absorption capabilities of the suppression pool.

C. Ensure PCPL is not reached in the event of an emergency depressurization.

D. Ensure HCTL is not reached in the event of a LOCA.

References: Tech Spec Bases 3.6.2.1

A. Incorrect since this is the reason for actions at 120°F.

B. Correct answer.

C. Incorrect since this is the basis for HCTL.

D. Incorrect since this is not a basis for suppression cooling action.

RO Tier:	T1G2	SRO Tier:	T1G1
Keyword:	SUPPRESSION POOL	Cog Level:	MEM 3.6/3.8
Source:	N	Exam:	HT02301
Test:	C	Misc:	

73. 295013AK3.01 001

Unit 2 is operating at 100% RTP. The quarterly HPCI Flow Rate test was just completed with the following plant conditions:

Torus Cooling	Both loops in operation
Torus Temperature	104°F and decreasing
Torus Level	149" and decreasing

For current plant conditions Tech Spec section 3.6.2.1 allows continued operation at 100% RTP for 24 hours before action must be taken to reduce power.

Which ONE of the following describes the reason for this allowance?

A. There is no threat to the containment at this time.

B. Primary Containment cooling capability still exists.

C. These conditions do not exceed the initial conditions assumed in the Containment Safety Analyses per FSAR 6.2.

D. This amount of time is reasonable, based on operating experience, to prepare for a unit shutdown.

References: Tech Spec Bases 3.6.2.1 ACTIONS A.1 and A.2
Tech Spec 3.6.2.1

A. Incorrect since there is a threat to containment when torus temperature is >100°F and no heat is being added to the containment due to testing.

B. Correct answer.

C. Incorrect since these conditions do exceed the initial conditions assumed in the safety analysis.

D. Incorrect since this is not a reasonable amount of time to prepare for a unit shutdown. 1 hour is a reasonable time per Tech Spec 3.0.3.

RO Tier:	T1G2	SRO Tier:	T1G1
Keyword:	SUPPRESSION POOL	Cog Level:	MEM 3.6/3.8
Source:	N	Exam:	HT02301
Test:	C	Misc:	

44. 295013AK3.01 001

Unit 2 is operating at 100% RTP. The quarterly HPCI Flow Rate test was just completed with the following plant conditions:

Torus Cooling	Both loops in operation
Torus Temperature	104 F and decreasing
Torus Level	149" and decreasing

For current plant conditions Tech Spec section 3.6.2.1 allows continued operation at 100% RTP for 24 hours before action must be taken to reduce power because:

A. There is no threat to the containment at this time.

B. Primary Containment cooling capability still exists.

C. These conditions do not exceed the initial conditions assumed in the Containment Safety Analyses per FSAR 6.2.

D. This amount of time is reasonable, based on operating experience, to prepare for a unit shutdown.

References: Tech Spec Bases 3.6.2.1 ACTIONS A.1 and A.2
Tech Spec 3.6.2.1

A. Incorrect since there is a threat to containment when torus temperature is >100 F and no heat is being added to the containment due to testing.

B. Correct answer.

C. Incorrect since these conditions do exceed the initial conditions assumed in the safety analysis.

D. Incorrect since this is not a reasonable amount of time to prepare for a unit shutdown. 1 hour is a reasonable time per Tech Spec 3.0.3.

21. 295014AK2.03 001

Which ONE of the following describes the Abnormal Operating Occurances (Plant Transients) which increase fuel temperature?

A. Recirc Flow Control Failure-Increasing Flow, Loss of Feedwater Heating, Inadvertent start of HPCI.

B. Loss of Shutdown Cooling, Loss of Condenser Vacuum, Recirc Flow Control Failure-Decreasing Flow.

C. Loss of Feedwater Heating, Trip of one Recirc Pump, Startup of idle Recirc Pump.

D. Recirc Flow Control Failure-Increasing Flow, Loss of Condenser Vacuum, Turbine Trip with Bypass Valves available.

References: FSAR section 15.2

A. Correct answer - all occurances increase reactor power and fuel temperature.

B, C and D. Incorrect since at least one occurance decreases reactor power and fuel temperature.

RO Tier:	T1G1	SRO Tier:	T1G1
Keyword:	FUEL TEMPERATURE	Cog Level:	C/A 3.3/3.4
Source:	N	Exam:	HT02301
Test:	C	Misc:	TCK

74. 295014AK2.03 001

Which ONE of the following describes the Abnormal Operating Occurances (AOO's) which increase fuel temperature?

A. Recirc Flow Control Failure-Increasing Flow, Loss of Feedwater Heating, Inadvertent start of HPCI.

B. Loss of Shutdown Cooling, Loss of Condenser Vacuum, Recirc Flow Control Failure-Decreasing Flow.

C. Loss of Feedwater Heating, Trip of one Recirc Pump, Startup of idle Recirc Pump.

D. Recirc Flow Control Failure-Increasing Flow, Loss of Condenser Vacuum, Turbine Trip with Bypass Valves available.

References: FSAR section 15.2

A. Correct answer - all occurances increase reactor power and fuel temperature.

B, C and D. Incorrect since at least one occurance decreases reactor power and fuel temperature.

RO Tier:	T1G1	SRO Tier:	T1G1
Keyword:	FUEL TEMPERATURE	Cog Level:	C/A 3.3/3.4
Source:	N	Exam:	HT02301
Test:	C	Misc:	TCK

QUESTIONS REPORT
for HT2002

1. 295014AK2.03 001

Which ONE of the following describes the Abnormal Operating Occurances (AOO's) which increase fuel temperature?

A. Recirc Flow Control Failure-Increasing Flow, Loss of Feedwater Heating, Inadvertent start of HPCI.

B. Loss of Shutdown Cooling, Loss of Condenser Vacuum, Recirc Flow Control Failure-Decreasing Flow.

C. Loss of Feedwater Heating, Trip of one Recirc Pump, Startup of idle Recirc Pump.

D. Recirc Flow Control Failure-Increasing Flow, Loss of Condenser Vacuum, Turbine Trip with Bypass Valves available.

References: FSAR section 15.2

A. Correct answer - all occurances increase reactor power and fuel temperature.

B, C and D. Incorrect since at least one occurance decreases reactor power and fuel temperature.

15.2 ANALYSES OF ANTICIPATED OPERATIONAL OCCURRENCES

The specific safety analysis results for anticipated operational occurrences (AOOs) presented in this section are the results for HNP-2. Because of the essentially identical design of the two units, the conclusions for HNP-2 apply also to HNP-1.

15.2.1 DECREASE IN CORE COOLANT TEMPERATURE

15.2.1.1 Loss of Feedwater Heating (Event 1)

The loss of feedwater heating (LFWH) event is a potentially limiting AOO for reloads and plant modifications that can impact the magnitude of the moderator temperature decrease due to an LFWH.

Consistent with ***NEDE-24011-P-A,"GESTAR II - General Electric Standard Application for Reactor Fuel" (incorporated by reference into the FSAR)***, the LFWH event is reevaluated each operating cycle to establish the core operating limits. ***NEDE-24011-P-A*** provides the starting conditions and assumptions, and event description applicable to each reload evaluation. A maximum decrease in feedwater temperature of 100°F from rated conditions is assumed in the reload evaluation. For the current reload, the cycle-specific analysis results are provided in the reload report. Table 15.1-1 identifies the reload reports consistent with Final Safety Analysis Report (FSAR) update requirements. The current reload report provides the current safety analysis results for the limiting events and is used to establish the applicable core operating limits documented in each unit's ***Core Operating Limits Report (COLR) (incorporated by reference into the FSAR)***.

The LWFH event was reanalyzed for power uprate at a rated thermal power (RTP) of 2763 MWt.[1] The following discussion provides the results of the power uprate analysis.

15.2.1.1.1 Identification of Causes

15.2.1.1.1.1 Starting Conditions and Assumptions. The following plant operating conditions and assumptions form the principal bases for the LFWH analysis:

A. The plant is operating at full power.

B. The plant is operating in the manual flow control mode.

15.2.1.1.1.2 Event Description. Feedwater heating can be lost in at least two ways:

- Steam extraction line to the heater is closed (steam bypassed).

- Feedwater is bypassed around the heater.

The first case produces a gradual cooling of the feedwater due to the stored heat capacity of the heater. In the second case, the feedwater bypasses the heater, and the change in heating occurs during the stroke time of the bypass valve. In either case, the reactor pressure vessel (RPV) receives cooler feedwater. The maximum number of feedwater heaters that can be either tripped or bypassed by a single event represents the most severe transient for analysis considerations. The feedwater heaters are assumed to trip instantaneously. This event causes an increase in core inlet subcooling, which increases core power due to the negative void reactivity coefficient.

For the analysis at 2763 MWt, a bounding value of 108°F for the feedwater temperature decrease was used.

15.2.1.1.2 Analysis of Effects and Consequences

15.2.1.1.2.1 Methods, Assumptions, and Conditions. For the analysis for power uprate (2763 MWt), the analysis methods described in section 15.1.7 were used. The 3-D simulator was used to analyze two state points with a difference of 108°F in feedwater temperature. The two separate exposure points considered in the analysis are end-of-cycle (EOC) at rated conditions and maximum extended load line limit middle-of-cycle (MOC). The key analysis input parameters are identified in table 15.2-3.

15.2.1.1.2.2 Results and Consequences. The analysis results for power uprate are provided in table 15.2-1.

Previous analyses demonstrate the LFWH event is less severe from lower initial power levels for two main reasons:

A. Lower initial power levels have initial minimum critical power ratio (MCPR) values greater than the assumed limiting initial value.

B. The magnitude of the power rise decreases with lower initial power conditions. Therefore, events from lower power levels are less severe.

15.2.1.1.2.3 Consideration of Uncertainties. Important factors (i.e., cycle exposure, plant operating conditions, and magnitude of feedwater temperature change) are assumed to be at the worst value; thus, any deviations in actual plant operation reduce the severity of the event.

15.2.1.2 Inadvertent Start of the HPCI Pump (Event 2)

The inadvertent start of the high-pressure coolant injection (HPCI) pump is a potentially limiting AOO for reloads and plant modifications that can impact the magnitude of the moderator temperature decrease due to inadvertent actuation of a high-pressure makeup system.

Consistent with ***NEDE-24011-P-A (GESTAR II)***, the inadvertent start of the HPCI pump is reevaluated each operating cycle to establish the core operating limits. ***NEDE-24011-P-A*** provides the starting conditions and assumptions, and event description applicable to each reload evaluation. For the current reload, the cycle-specific analysis results are provided in the reload report. Table 15.1-1 identifies the reload reports consistent with FSAR update requirements. The current reload report provides the current safety analysis results for the limiting events and is used to establish the applicable core operating limits documented in each unit's ***COLR***.

The inadvertent start of the HPCI pump was evaluated for power uprate at an RTP of 2763 MWt and found to be less limiting than the LFWH event; thus, the inadvertent start of the HPCI pump was not reanalyzed for power uprate. The following discussion provides the results of the analysis for the initial core for the original rated conditions.

15.2.1.2.1 Identification of Causes

15.2.1.2.1.1 Starting Conditions and Assumptions. For the analysis for original rated conditions (2436 MWt), the reactor is operating at 105% of nuclear boiler rated steam flow power (2535 MWt) with thermally limited conditions. All systems are assumed to be operational in their normal modes of operation.

The inadvertent actuation of the low-pressure ECCS requires that multiple failures occur during the limited time when the reactor is operating in either the startup or the shutdown mode. This is clearly a very low probability event and, thus, is not considered an AOO.

15.2.1.2.1.2 Event Description. The HPCI system introduces cold water through the feedwater sparger at ~ 20.1% of the original rated feedwater flow. The water level controls correspondingly reduce normal feedwater flow. In the manual mode of recirculation flow control, no flow adjustments are made, and the excursions of related system variables are greater.

15.2.1.2.2 Analysis of Effects and Consequences

15.2.1.2.2.1 Methods, Assumptions, and Conditions. For the analysis for the original rated conditions (2436 MWt), the nonlinear dynamic model described in NEDO-10802[2] was used to simulate the inadvertent start of the HPCI pump. An analysis for the manual mode of recirculation flow control was performed. HPCI water was assumed to be at a temperature of

40°F with an equivalent enthalpy of 11.0 Btu/lb. The key analysis input parameters are identified in table 15.2-3.

15.2.1.2.2.2 Results and Consequences. For the analysis for the original rated conditions (2436 MWt), the event that occurs is similar to the LFWH event, although somewhat faster. The inadvertent start of the HPCI pump is less severe than the LFWH event, because the effect on mixed feedwater temperature produces a smaller temperature change than 100°F cooler total feedwater flow. The MCPR is greater than the safety limit (SL) MCPR. The neutron flux peak reaches the flow-referenced flux scram setpoint, but the pressure transients do not approach any pressure limit. At full power, the transient power peak is higher than at lower powers, thus, producing a lower MCPR during the event. The peak pressures reached during this event at full power are also higher than at lower power. The transient response of the plant variables for the inadvertent startup of the HPCI pump is shown in figure 15.2-1.

15.2.1.2.2.3 Consideration of Uncertainties. Although no aspects of reactor design are threatened by the inadvertent startup of the HPCI pump, the analysis assumed conservative (most severe) characteristics for HPCI startup. Actual plant deviations are expected to make the results of the event less severe.

15.2.1.3 Shutdown Cooling (RHR) Malfunction - Decreasing Temperature (Event 3)

This evaluation, which was performed for the initial core for the original rated conditions (2436 MWt), demonstrated a malfunction of the shutdown cooling mode of the residual heat removal (RHR) system with decreasing temperature is a nonlimiting AOO and does not require reevaluation for reloads.

At design power conditions, the shutdown cooling mode of RHR is not operable, and no conceivable malfunction causing temperature reduction is possible considering the spectrum of potential single failures in the RHR system.

A shutdown cooling malfunction leading to a moderator temperature decrease can result from a malfunctioning of the cooling water controls for the RHR heat exchangers. If the reactor is critical, or near critical, a very slow increase in reactor power can result. If the operator does not act to control power level, a high neutron flux reactor scram will terminate the transient without fuel damage and without any measurable increase in nuclear system pressure.

15.2.2 INCREASE IN CORE COOLANT TEMPERATURE

15.2.2.1 Loss of RHR Shutdown Cooling (Event 4)

This evaluation, which was performed for the initial core for the original rated conditions (2436 MWt), demonstrated the loss of RHR shutdown cooling is a nonlimiting AOO and does

not require reevaluation for reloads, because it is bounded by other events for the purpose of establishing core operating limits.

The design evaluation of the plant's capability to meet the Nuclear Regulatory Commission's (NRC's) position on General Design Criterion (GDC) 34 is discussed in paragraph 15.2.2.2.

15.2.2.1.1 Identification of Causes

15.2.2.1.1.1 Starting Conditions and Assumptions. When initially operating in the shutdown cooling mode, the reactor is assumed to be undergoing normal shutdown and cooldown when an RHR shutdown cooling system failure that reduces the capability to remove decay heat occurs.

15.2.2.1.1.2 Event Description. When initially operating in the shutdown cooling mode, the loss of RHR shutdown cooling capability increases core coolant temperature.

15.2.2.1.2 Analysis of Effects and Consequences

15.2.2.1.2.1 Methods, Assumptions, and Conditions. When initially operating in the shutdown cooling mode, the loss of RHR shutdown cooling capability directly causes an RPV water temperature increase, because the energy removal rate is less than the decay heat rate. This event can occur only during the low-pressure portion of a normal reactor shutdown and cooldown when the RHR system is operating in the shutdown cooling mode. No cladding temperature increase occurs, because boiling transition is never observed. Maximum heat flux at 4 h following shutdown (the earliest time the shutdown cooling system can be actuated due to cooldown rate limitations) is 4700 Btu/h/ft^2, assuming ANS + 20% decay heat power generation. This surface heat flux is significantly below the condition resulting in boiling transition, and thus, nucleate boiling heat transfer is maintained. Since MCPR remains high, a plot of MCPR versus time of operator initiation of ECCS serves no purpose in evaluating operator response time. The 10-min time period approximated for operator action is an estimate of how long it will take the operator to initiate the necessary actions and is not a time by which the action must be initiated.

15.2.2.1.2.2 Results and Consequences. For most single failures that can result from the loss of shutdown cooling, no unique safety actions are required. In these cases, shutdown cooling is simply reestablished using other normal shutdown cooling equipment. In cases where the RHR system shutdown cooling suction line becomes inoperative, a unique requirement for cooling arises. In operating states in which the RPV head is off, the low-pressure coolant injection (LPCI) mode of the RHR system, can be used to maintain water level. In states in which the RPV head is on and the system can be pressurized, the low-pressure cooling systems, the safety relief valves (SRVs) (manually operated), and the

RHR system suppression pool cooling mode can be used to maintain water level and remove decay heat.

The most limiting single failure that can be postulated for this event is failure of a diesel generator. However, loss of either Division I or Division II does not negate the core cooling capability of the RHR system. Failure of Division I disables RHR loop A and the core spray (CS) system. In this case, RHR loop B is available to cool the core in the shutdown cooling mode. Failure of Division II disables loop B and the inboard isolation valve in the RHR suction line attached to the recirculation loop. In this case, RPV steam is relieved to the suppression pool through the SRVs. The heat is removed from the suppression pool by pumping water from the pool through the RHR loop A heat exchanger. The cooled water is then returned to the RPV to maintain level and continue core cooling. No single failure can simultaneously preclude the RHR system's ability to draw water from the suppression pool and the recirculation loop.

15.2.2.1.2.3 **Consideration of Uncertainties.** The multiplicity of operator actions available to mitigate the effects of the loss of RHR shutdown cooling ensures reactor cooldown can be accomplished.

15.2.2.2 Compliance with GDC 34

The following design evaluation describes the plant's capability to meet the NRC's position on GDC 34, assuming the failure of one of the shutdown cooling valves in the closed position.

The design evaluation is divided into two phases:

- Full power operation to ~ 100-psig RPV pressure.
- ~ 100-psig RPV pressure to cold shutdown conditions.

The success paths are shown in figure 15.2-2.

Full Power to ~ 100 psig

Independent of the event that initiated plant shutdown (whether it be a normal plant shutdown or a forced plant shutdown), the reactor is normally brought to ~ 100 psig by using either the main condenser or, in the case where the main condenser is unavailable, the reactor core isolation cooling (RCIC) and the HPCI systems and/or the SRVs.

For evaluation purposes, a loss of offsite power (LOSP) is assumed to initiate a plant shutdown, which results in SRV actuation and subsequent suppression pool heatup. For this postulated condition, the reactor is shut down, and RPV pressure and temperature are reduced to and maintained at saturated conditions of ~ 100 psig.

Using the automatic depressurization system (ADS) SRVs to control pressure, RPV makeup water is automatically provided via the RCIC and HPCI systems. While in this condition, the

RHR system (suppression pool cooling mode) is used to maintain suppression pool temperature within shutdown limits.

These systems are designed to routinely perform their functions for both normal and forced plant shutdowns. Since the RCIC, HPCI, and RHR systems are divisionally separated, no single failure, together with an LOSP, is capable of preventing system pressure from reaching the 100-psig level.

~ 100 psig to Cold Shutdown

The following assumptions are used in analyzing the procedures for attaining cold shutdown from a pressure of ~ 100 psig:

A. The RPV is at 100 psig and saturated conditions.

B. A worst-case single failure is assumed to occur (i.e., loss of a division of emergency power).

C. No offsite power is available.

If the RHR shutdown suction line is not available because of single failure, the first action to be taken is to maintain the 100-psig level while personnel gain access and effect repairs. For example, a handwheel on the valve is provided to allow manual operation. Nevertheless, if for some reason the normal shutdown cooling suction line cannot be repaired, the capabilities described below will satisfy the normal shutdown cooling requirements and, thus, comply fully with GDC 34.

To satisfy containment isolation criteria, the RHR shutdown cooling line valves are in two divisions: Division I (the inboard valve) and Division II (the outboard valve). For evaluation purposes, the worst-case failure is assumed to be the loss of a division of emergency power, since this also prevents actuation of one shutdown cooling line valve. Engineered safety feature (ESF) equipment available for accomplishing the shutdown cooling function includes (for the selected path):

ADS (dc Division I and dc Division II)

Division I	Division II
RHR pump 2A	RHR pump 2B
RHR pump 2C	RHR pump 2D
RHR service water (RHRSW) pump 2A	RHRSW pump 2B
RHRSW pump 2C	RHRSW pump 2D
CS pump 2A	CS pump 2B
RCIC	HPCI

For failure of either Division I or II, the following systems are assumed to be functional:

Failure of Division I (Equipment Functional)	Failure of Division II (Equipment Functional)
ADS	ADS
RHR pump 2B	RHR pump 2A
RHR pump 2D	RHR pump 2C
RHRSW pump 2B	RHRSW pump 2A
RHRSW pump 2D	RHRSW pump 2C
CS pump 2B	CS pump 2A
HPCI	RCIC

Assuming the single failure is the failure of Division I, the safety function is accomplished by establishing the cooling loops described in activity C1 of figure 15.2-3. (The notes for figure 15.2-3 are located in table 15.2-2.) Similarly, activity C2 relates to the failure of Division II. Figures 15.2-4 and 15.2-5 show the simplified arrangement of the various cooling loops for activities C1 and C2, respectively. The preceding evaluation demonstrates that, even under worst-case conditions (failure of an emergency power division), a cooling path is available to remove residual heat from the core and, thus, complies fully with GDC 34.

15.2.3 INCREASE IN REACTOR PRESSURE

15.2.3.1 Generator Load Rejection with No Bypass (Event 5)

The generator load rejection with no bypass (LRNBP) event is a potentially limiting AOO for reloads and plant modifications that can impact the rapid pressurization event.

Consistent with ***NEDE-24011-P-A (GESTAR II)***, the LRNBP event is reevaluated each operating cycle as a part of the process for establishing the core operating limits. ***NEDE-24011-P-A*** provides the starting conditions and assumptions, and event description applicable to the reload evaluation. The limiting power-to-flow conditions identified in EAS 65-1088[3] are used as initial conditions. To bound the potential unavailability of the EOC-recirculation pump trip (RPT) feature during normal plant operation, two LRNBP cases are typically evaluated for reloads: EOC-RPT available and EOC-RPT out of service. For the current reload, the cycle-specific analysis results are provided in the reload report. Table 15.1-1 identifies the reload reports consistent with FSAR update requirements. The current reload report provides the current safety analysis results for the limiting events and is used to establish the applicable core operating limits documented in the ***COLR***.

The LRNBP event was reanalyzed for power uprate at an RTP of 2763 MWt.[1] The following discussion provides the results of the power uprate analysis.

15.2.3.1.1 Identification of Causes

Fast closure of the turbine control valves (TCVs) is initiated whenever electrical grid disturbances that result in significant loss of load on the generator occur. TCV rapid closure is required to prevent overspeed of the turbine-generator rotor. TCV fast closure causes a sudden reduction in steam flow, which results in an RPV pressure increase. TCV fast closure scrams the reactor.

15.2.3.1.1.1 **Starting Conditions and Assumptions.** The following plant operating conditions and assumptions form the principal bases for the LRNBP analysis for power uprate:

A. The reactor and the turbine are initially operating at rated power with a dome pressure of 1035 psig when load rejection occurs.

B. The turbine electrohydraulic control (EHC) system power/load imbalance device detects load rejection before a measurable speed change takes place.

C. A scram and an EOC-RPT are automatically initiated upon sensing TCV fast closure.

D. All plant control systems, with the exception of the turbine bypass system, continue normal operation.

E. Auxiliary power is continuously supplied at rated frequency.

F. The reactor is operating in the manual flow control mode when load rejection occurs.

G. The turbine bypass valve system is failed in the closed position.

H. One SRV is assumed to be out of service.

15.2.3.1.1.2 **Event Description.** For the analysis of power uprate conditions, the complete loss of generator load produces the following sequence of events:

A. The power/load imbalance device steps the load reference signal to zero and closes the TCVs and intermediate (intercept) valves at the earliest possible time. The turbine accelerates at a maximum rate until the valves close at a maximum rate by means of fast acting, solenoid-operated, disc-dump valve action. The TCVs close at a full stroke rate of ~ 0.150 s.

B. A reactor scram and an EOC-RPT are initiated upon sensing TCV fast closure.

C. The pressure rises to the SRV setpoints. The SRVs open, discharging steam to the suppression pool, to limit the pressure increase.

15.2.3.1.2 Analysis of Effects and Consequences

15.2.3.1.2.1 Methods, Assumptions, and Conditions. For the analysis for power uprate (2763 MWt), the analysis methods described in subsection 15.1.7 were used. The 1-D transient analysis model was used to simulate the event. The key analysis input parameters are identified in table 15.2-3.

15.2.3.1.2.2 Results and Consequences. For the analysis for power uprate (2763 MWt), the LRNBP event was analyzed for three power-to-flow conditions:

- 100% power and 100% flow (figure 15.2-6).
- 100% power and 105% flow (figure 15.2-7).
- 100% power and 91% flow.

The analysis results for the three power-to-flow conditions are provided in table 15.2-1.

With any load rejection, a main generator speed increase is expected to occur when a consequential increase in the recirculation system drive motor ultimately increases the recirculation pump motor speed. However, due to the effect of the recirculation speed control loops, the pump speed increase is relatively insignificant. In the simulation of the load rejection event, standard practice includes the pump overspeed effect, which is a marginal effect, particularly when the two-pump trip system is effective.

15.2.3.1.3 Generator Load Rejection with No Bypass - Low Power

The load rejection scram trip and EOC-RPT are bypassed at an RTP < 28%. In this case, the other protection system trips (high flux or high pressure) are used to initiate safe shutdown of the reactor. This is one of the events analyzed to establish the core operating limits at reduced power levels implemented with the Average Power Range Monitor/Rod Block Monitor Technical Specification Improvement Program (ARTS) documented in NEDC-30474-P.[4] The power uprate evaluations confirmed the applicability of the ARTS operating limits.[1]

15.2.3.2 Generator Load Rejection with Bypass (Event 6)

The generator load rejection with bypass (LRBP) event is a nonlimiting AOO and does not require reanalysis for reloads. However, due to a power increase of more than 10% of the original licensed power level, the LRBP event was required to be reanalyzed for power uprate at an RTP of 2763 MWt.[10] The power uprate analysis confirms that the LRBP event bounds the LRNBP event. The following discussion presents the results of the power uprate analysis.

15.2.3.2.1 Identification of Causes

The causes of the LRBP event are the same as the causes of the LRNBP event (paragraph 15.2.3.1.1).

15.2.3.2.1.1 **Starting Conditions and Assumptions.** The starting conditions and assumptions for the LRBP are the same as the starting conditions and assumptions for the LRNBP (paragraph 15.2.3.1.1.1), with one exception: the turbine bypass system is assumed to be operable.

15.2.3.2.1.2 **Event Description.** The event description for the LRBP is the same as the event description for the LRNBP (paragraph 15.2.3.1.1.2), with the following exception: the turbine bypass valves are opened simultaneously with TCV fast closure when the load demand is stepped to zero.

15.2.3.2.2 Analysis of Effects and Consequences

15.2.3.2.2.1 **Methods, Assumptions, and Conditions.** For the analysis for power uprate (2763 MWt), the analysis methods described in subsection 15.1.7 were used. The 1-D transient analysis model was used to simulate the event. The key analysis input parameters are identified in table 15.2-3.

15.2.3.2.2.2 **Results and Consequences.** For the analysis for power uprate (2763 MWt), the LRBP event was analyzed at rated power and flow. The analysis results for power uprate are provided in table 15.2-1.

15.2.3.2.3 Generator Load Rejection with Bypass - Low Power

The load rejection scram trip and EOC-RPT are bypassed at an RTP < 28%. In this case, the other protection system trips (high flux or high pressure) are used to initiate safe shutdown of the reactor. Operator action can prevent a scram from high flux or pressure, depending upon how much the actual bypass is exceeded.

For an initial power level less than the turbine bypass capacity, a reactor shutdown is not expected, since rapid operation of the bypass will divert the excess steam to the main condenser. The consequences of this event on the fuel and RPV overpressure are considerably less than the full-power case described above.

15.2.3.3 Turbine Trip with No Bypass (Event 7)

When the TCVs are operating in the partial arc mode, the turbine trip with no bypass (TTNBP) event is a potentially limiting AOO for reloads and plant modifications that can impact rapid pressurization events.

Consistent with ***NEDE-24011-P-A (GESTAR II)***, the TTNBP event is reevaluated each operating cycle to establish the core operating limits. ***NEDE-24011-P-A*** provides the starting conditions and assumptions, and event description applicable to the reload evaluation. The limiting power-to-flow conditions identified in EAS 65-1088[3] are used as initial conditions. To bound the potential unavailability of the EOC-RPT feature during normal plant operation, two TTNBP cases are typically evaluated for reloads: EOC-RPT available and EOC-RPT out of service. For the current reload, the cycle-specific analysis results are provided in the reload report. Table 15.1-1 identifies the reload reports consistent with FSAR update requirements. The current reload report provides the current safety analysis results for the limiting events and is used to establish the applicable core operating limits documented in the ***COLR.***

The TTNBP event was reanalyzed for power uprate at an RTP of 2763 MWt.[1] The following discussion provides the results of the power uprate analysis.

15.2.3.3.1 Identification of Causes

A variety of turbine or nuclear system malfunctions will initiate a turbine trip. Some examples are:

- Moisture-separator and heater drain tank high levels.
- Large vibrations.
- Operator lockout.
- Loss of control fluid pressure.
- Low condenser pressure (paragraph 15.2.3.4).
- RPV water level - high.

15.2.3.3.1.1 Starting Conditions and Assumptions. For the analysis of the TTNBP event for power uprate (2763 MWt), the following assumptions were used:

A. A turbine trip initiates the events that result in a fast closure of the TSVs (0.1 s).

B. The position switches on the TSVs initiate a reactor scram and an EOC-RPT when the valves are < 90% open.

C. The scram is automatically bypassed when the reactor is < 28% of RTP.

D. An RPV pressure rise opens the SRVs.

E. The TCVs are operating in the partial-arc mode.

15.2.3.3.1.2 **Event Description.** The sequence of events for a turbine trip is similar to the sequence of events for a generator load rejection. TSV closure occurs over a period of ~ 0.1 s. Position switches at the TSVs sense the turbine trip and initiate a reactor scram and an EOC-RPT. The pressure rises to the SRV setpoints, and the SRVs open, discharging steam to the suppression pool.

15.2.3.3.2 Analysis of Effects and Consequences

15.2.3.3.2.1 **Methods, Assumptions, and Conditions.** For the analysis for power uprate (2763 MWt), the analysis methods described in subsection 15.1.7 were used. The 1-D transient analysis model was used to simulate the event. The key analysis input parameters are identified in table 15.2-3.

For the analysis of the TTNBP event in the partial arc mode for power uprate conditions, the following assumptions were used:

A. A turbine trip initiates events that result in a fast closure of the TSVs (0.1 s).

B. Position switches on the TSVs initiate a reactor scram and an EOC-RPT when the valves are < 90% open.

C. The scram is automatically bypassed when the reactor is < 28% of RTP.

15.2.3.3.2.2 **Results and Consequences.** For the analysis for power uprate (2763 MWt), the TTNBP event was analyzed for three power-to-flow conditions:

- 100% power and 100% flow (figure 15.2-8).
- 100% power and 105% flow (figure 15.2-9).
- 100% power and 91% flow.

The analysis results for these three power-to-flow conditions are provided in table 15.2-1.

15.2.3.3.2.3 **Consideration of Uncertainties.** Key uncertainties involve protection system settings, system capacities, and system response characteristics. In all cases, the most conservative values were used; e.g.:

A. The slowest allowable control rod scram time.

B. The scram worth shape for all-rod-out conditions.

C. The minimum specified valve capacities for overpressure protection.

D. The conservative SRV setpoints.

Considering these conservative factors, the analyses adequately cover expected uncertainties.

15.2.3.3.3 Turbine Trip with No Bypass - Low Power

The turbine trip with no bypass at low power is less severe than a similar event at high power. However, this event is of interest, because the TSV closure and TCV closure scrams are automatically bypassed when the reactor is < 28% of RTP. At these lower power levels, turbine first-stage pressure is used to initiate the scram logic bypass. High RPV pressure terminates the scram that terminates the event. Because the bypass valves are assumed to fail, the SRVs must open partially to relieve the pressure transient.

The turbine trip with no bypass at low power is one of the events analyzed to establish the core operating limits at reduced power levels implemented with the ARTS program documented in NEDC-30474-P.[4] The power uprate (2763 MWt) evaluations confirm the applicability of the ARTS operating limits.[1]

15.2.3.4 Loss of Condenser Vacuum (Event 8)

This evaluation, which was performed for the initial core for the original rated conditions (2436 MWt), demonstrated the loss of condenser vacuum event is a nonlimiting AOO and does not require reevaluation for reloads.

The reduction in or the loss of vacuum in the main turbine condenser can sequentially trip the main and feedwater turbines, and finally close the main steam isolation valves (MSIVs) and bypass valves. Other resultant actions include a scram from TSV closure, an EOC-RPT, and bypass valve opening initiated with the main turbine trip. Because the protective actions are actuated at various levels of condenser vacuum, the severity of the resulting transient is directly dependent upon the rate at which vacuum pressure is lost and is less limiting than the TTNBP.

Vacuum (in. Hg)	Protective Action Initiated
27 to 28	Normal vacuum range.
20	Main turbine trip and feedwater turbine trip (TSV closure).
10	MSIV and bypass valve closure.

Normal loss of vacuum due to the loss of a steam jet air ejector (SJAE), or a similar problem, produces a very slow rate of loss of vacuum (minutes, not seconds). If operator corrective action is not successful, the vacuum loss will sequentially actuate a simultaneous trip of the main turbine and feedwater turbines. Complete isolation results from closing the bypass valves (opened with the main turbine trip) and the MSIVs.

Since the bypass valves are closed more quickly, their overall effectiveness is reduced.

The effect of MSIV closure tends to be minimal, since TSV closure, and subsequently, bypass valve closure, shut off main steam line (MSL) flow prior to MSIV closure.

The maximum rate of loss of condenser vacuum expected for a loss of all condenser cooling water pumps at maximum power conditions is ~ 2 in. Hg/s. If this rate of decrease is applied to the items listed above, TSV closure will initiate a scram, and full isolation will occur after 5 to 10 s. The RCIC and HPCI systems provide long-term water inventory supply.

15.2.3.5 Turbine Trip with Bypass (Event 9)

This evaluation, which was performed for the initial core for the original rated conditions (2436 MWt), demonstrated the turbine trip with bypass (TTBP) event is a nonlimiting AOO and does not require reevaluation for reloads.

15.2.3.5.1 Identification of Causes

The causes of the TTBP event are the same as the causes of the TTNBP event (paragraph 15.2.3.3.1).

15.2.3.5.1.1 Starting Conditions and Assumptions. The reactor is initially operating at 105% of nuclear boiler rated steam flow power (2535 MWt) with an RPV dome pressure of 1020 psig.

15.2.3.5.1.2 Event Description. The sequence of events for a TTBP event is similar to the sequence of events for a TTNBP event; however, but the results are slightly less severe. TSV closure occurs over a period of ~ 0.1 s. Position switches at the TSVs sense the turbine trip and initiate a reactor scram and an EOC-RPT. The turbine control system immediately initiates bypass valve opening. The SRVs open to help relieve pressure. Following these actions, the bypass valves are used to control reactor pressure during shutdown.

15.2.3.5.2 Analysis of Effects and Consequences

15.2.3.5.2.1 Methods, Assumptions, and Conditions. For the analysis for the original rated conditions (2436 MWt), the nonlinear dynamic model described in detail in NEDO-10802[2] was used to simulate this event. The key analysis input parameters are identified in table 15.2-3.

The assumptions and conditions relative to the TTBP event analysis are as follows:

A. A turbine trip initiates the events that result in a fast closure of the TSVs (0.1 s).

B. The position switches on the TSVs initiate a reactor scram when the valves are < 90% open.

C. The scram is automatically bypassed when the reactor is < 30% of RTP.

D. The SRVs open at their maximum setpoints.

E. The steam bypass system operates at its design capacity.

15.2.3.5.2.2 Results and Consequences. Figure 15.2-10 shows the transient expected from 105% of nuclear boiler rated steam flow power conditions (2535 MWt). Neutron flux increases rapidly because of the void reduction caused by the pressure increase. However, the TSV scram and the EOC-RPT limit the flux increase to 179% of rated. Peak fuel surface heat flux does not exceed 102.7% of its rated value. Peak pressure in the bottom of the RPV reaches 1176 psig, which is below the ASME Code limit of 1375 psig for the reactor coolant pressure boundary (RCPB). RPV dome pressure does not exceed 1148 psig. The severity of turbine trips from lower initial power levels decreases to the point where a scram can be avoided if auxiliary power is available from an external source, and power level is within bypass capability.

15.2.3.5.2.3 Consideration of Uncertainties. The key uncertainties for the TTBP event are the same as the key uncertainties for the TTNBP event (paragraph 15.2.3.3.2.3).

15.2.3.6 Closure of All MSIVs (MSIVD) (Event 10)

The MSIVD event is a nonlimiting AOO and does not require reanalysis for reloads.

The MSIVD event was evaluated for power uprate at an RTP of 2763 MWt to determine whether this previously nonlimiting event would become more severe, and possibly limiting, under power uprate operating parameters.[10] The following discussion presents the results of the power uprate analysis.

15.2.3.6.1 Identification of Causes

Various malfunctions or operator actions can initiate MSIV closure. Examples are:

- Low steam line pressure.
- High steam line flow.
- Low water level.
- Manual action.

15.2.3.6.1.1 **Starting Conditions and Assumptions.** The reactor was initially operating at rated conditions (2763 MWt) with an RPV dome pressure of 1035 psig.

15.2.3.6.1.2 **Event Description.** As MSIVs close, position switches on the valves initiate a reactor scram when the valves on three or more MSLs are < 90% open and the reactor mode switch is in the RUN position. Protection system logic permits the test closure of one valve without initiating a reactor scram.

15.2.3.6.2 Analysis of Effects and Consequences

15.2.3.6.2.1 **Methods, Assumptions, and Conditions.** For the power uprate analysis, the transient analysis methods described in subsection 15.1.7 were used. The key analysis input parameters are identified in table 15.2-3.

For the MSIVD analysis, the following assumptions and conditions were used:

A. The closure of all MSIVs initiates the event.

B. The MSIVs close in 3 to 5 s. The worst case, the 3-s closure time, is assumed.

C. Position switches on the MSIVs initiate a reactor scram when the valves are < 90% open. MSIV closure inhibits steam flow to the feedwater turbines, terminating feedwater flow.

D. Valve closure indirectly causes a trip of the main turbine and generator, but late enough into the event so that no significant impact occurs.

Following the initial drop in RPV water level due to void collapse, which results from the initial pressure transient, water level is recovered. The recovery arises from the pressure-reducing action of the SRVs and the fact that some feedwater is still entering the RPV following isolation. The transient water level on recovery

may be sufficiently high to produce a TSV trip on high water level. If a TSV trip occurs, it will occur ~ 6 to 8 s following the initial MSIV closure and will not impact the event.

E. Because of the loss of feedwater flow, RPV water level is eventually decreased sufficiently to initiate an RPT and operation of the HPCI and RCIC systems.

15.2.3.6.2.2 Results and Consequences. The results and consequences for an MSIVD event are provided below:

A. Analysis Results

Figure 15.2-11 shows the plant response to an MSIVD event. The analysis results are provided in table 15.2-1.

B. Fission Product Released from the Fuel

The activity released is related to the activity in the reactor coolant and the activity released as a consequence of a reactor scram and an RPV depressurization from any fuel defects that existed prior to the event.

C. Activity Released to the Environment

The activity released during this event is contained in the RPV and the suppression pool. Very little activity is released to the environment.

D. Radiological Effects

The offsite doses resulting from this event are inconsequential.

15.2.3.6.2.3 Consideration of Uncertainties. Uncertainties in the analysis of MSIV closure include all the factors identified for the TTNBP event in paragraph 15.2.3.3.2.3. An additional variation is the closure time of the MSIVs. The time assumed in this analysis is 3 s, the fastest, and thereby the most conservative, closure time allowed by the Technical Specifications.

15.2.3.7 Closure of One MSIV (Event 11)

This evaluation, which was performed for the initial core for the original rated conditions (2436 MWt), demonstrated the closure of one MSIV event is a nonlimiting AOO and does not require reevaluation for reloads.

Only one isolation valve at a time is permitted to be closed for testing purposes. This precludes a reactor scram from the position switch signals. Normal test procedure requires an initial power reduction to ~ 80 to 90% of design conditions to avoid a high-flux scram, a high-pressure scram, or full isolation from high steam flow in the steam lines. With a 3-s closure of one MSIV

from 105% of the nuclear boiler rated steam flow conditions (2535 MWt), the steam flow disturbance raises RPV pressure and reactor power enough to initiate a high neutron flux scram. Peak surface heat flux and peak center fuel temperature increase slightly. However, no significant decrease in thermal margins is experienced. Peak pressure remains below the lowest SRV setpoint. This event is considerably milder than the full-closure case.

Inadvertent closure of one MSIV while the reactor is shutdown will produce no significant event. Closures during plant heatup are less severe than the maximum power cases (maximum stored and decay heat).

15.2.3.8 Pressure Regulator Failure - Closed (Event 12)

This evaluation, which was performed for the initial core for the original rated conditions (2436 MWt) demonstrated the pressure regulator failure - closed event is a nonlimiting AOO and does not require reevaluation for reloads.

If the controlling regulator fails in the closed position, the backup regulator takes control of the turbine admission valves, preventing any serious transient. The disturbance is mild, similar to a pressure setpoint change, and no significant reductions in fuel thermal margins occur. The pressure regulator failure - closed event is much less severe than the LRNBP and the TTNBP events described in paragraphs 15.2.3.1 and 15.2.3.3, respectively.

15.2.4 DECREASE IN REACTOR CORE COOLANT FLOWRATE

15.2.4.1 Trip of One Recirculation Pump (Event 13)

This evaluation, which was performed for the initial core for the original rated conditions (2436 MWt), demonstrated the trip of one recirculation pump event is a nonlimiting AOO and does not require reevaluation for reloads.

15.2.4.1.1 Identification of Causes

15.2.4.1.1.1 Starting Conditions and Assumptions. The event begins with the trip and coastdown of one recirculation pump from 105% of nuclear boiler rated steam flow (2535 MWt), causing a core coolant flow decrease. Initially limiting fuel thermal conditions are assumed.

15.2.4.1.1.2 Event Description. Normal coastdown of one recirculation pump can occur through the trip of its drive motor breaker or the deenergization of the generator field, which causes the fastest coastdown. The FSAR does not contain a quantitative analysis for the one-pump trip for the case where a generator field is deenergized, because the trip of both recirculation pumps is more severe.

No single action can produce a simultaneous trip of the generator field breakers in both loops. This is why the drive motors were tripped in the two-pump trip event. The trip of both recirculation drive motors is more severe than the deenergization of one field breaker.

15.2.4.1.2 Analysis of Effects and Consequences

15.2.4.1.2.1 Methods, Assumptions, and Conditions. For the analysis for the original rated conditions (2436 MWt), the nonlinear dynamic model described in NEDO-10802[2] was used to simulate this event. The key analysis parameters are identified in table 15.2-3.

The EOC-RPT system trips the line breakers located between the motor-generator (M-G) and the pump motor. Thus, for events during which the EOC-RPT system is activated, the coastdown characteristics of the pump, pump motor, and the pump shaft are the important parameters of interest. The inertial time used in the analysis for the pump/motor combination was 4.0 s, which is an equipment specification for the pump motor and pump shaft combination. The actual equipment inertia constant is expected to be conservatively less than the value used in the analysis. The reason for using the higher value for the time constant is to account for any inaccuracies in the analysis, such as those due to jet pump efficiencies. A larger value of the inertia constant is conservative, since it results in a slower core flow coastdown. Hence, power is reduced at a slower rate. The flow coastdown characteristics of the recirculation loop were verified during startup testing.

For the two-drive motor trip event in which the total inertia of the drive motor, M-G, pump motor, and pump sets is included, a conservatively smaller inertia than expected was used in the analysis. The value of the inertial time constant used in the analysis was 5 s. This was also verified during startup testing and found to be conservatively small, resulting in a more rapid flow coastdown in the analyzed event. Section 2.12 of reference 2 provides the following equation for the shaft speed of the form:

$$\frac{\pi J}{30 g_c}\frac{dn}{dt} = \Delta T$$

where:

J = inertia.

n = speed.

T = torque.

Normalizing to an initial torque and speed (T_o, n_o):

$$\Delta T = \left(\frac{\pi J n_o}{30 g_c T_o}\right)\frac{1}{n_o}\frac{dn}{dt}$$

This equation is of the form:

$$\frac{Y}{Y_o} = \tau \frac{dx}{dt}$$

where: τ = the effective inertial time constant, and for this system, is defined as:

$$\tau = \left(\frac{\pi J n_o}{30 g_c T_o} \right)$$

Since the more negative void reactivity coefficient assumed for the pressurization transients is nonconservative for flow decreases, this event was evaluated with the conservatively reduced void coefficient given in table 15.2-3.

15.2.4.1.2.2 **Results and Consequences.** Diffuser flow on the tripped side reverses; however, the M-ratio in the active jet pumps increases considerably. The power drops with flow decrease. The results and consequences of the trip of one recirculation pump are milder than the results and consequences of the trip of two recirculation pumps described in paragraph 15.2.4.2. No reduction in thermal margin occurs.

15.2.4.1.2.3 **Consideration of Uncertainties.** The initial conservative, limited conditions chosen for this analysis force the analytical results to appear more severe than actually expected. Actual rotating equipment inertia is also expected to be somewhat larger than the minimum design value assumed in these calculations. Any deviations from the assumed conditions are expected to make the results of the trip of one recirculation pump less severe.

15.2.4.2 Trip of Two Recirculation Pumps (Event 14)

This analysis, which was performed for the initial core for the original rated conditions (2436 MWt), demonstrated the trip of two recirculation pumps is a nonlimiting AOO and does not require reevaluation for reloads.

15.2.4.2.1 Identification of Causes

15.2.4.2.1.1 **Starting Conditions and Assumptions.** Steady-state operation of the plant at 105% of nuclear boiler rated steam flow power (2535 MWt) and 100% of rated core flow with thermally limited conditions is assumed.

15.2.4.2.1.2 **Event Description.** The two-loop pump coastdown can occur only from the simultaneous loss of power to both pump drive motors. No single operator action or plant protection action can produce the simultaneous trip of the generator field breakers in both loops. The electrical circuits controlling the M-G field circuit breakers are entirely separate. The field circuit breaker trip coils must be energized to open the breakers. Because of the separation and disposition of these two independent circuits, no event that can simultaneously trip both circuit breakers is postulated. This analysis provides the evaluation of the fuel thermal margins maintained by rotating inertia of the pumps, M-G sets, and drive motors.

As in all core flow decrease events, the abrupt reduction in core flow increases the core void fraction, thereby reducing power. The fuel surface heat flux decreases more slowly than the flow because of the fuel time constants; thus, fuel thermal margins can momentarily decrease. It is unlikely MCPR will fall below 1.30, and in any case, such a decrease will be minimal.

15.2.4.2.2 Analysis of Effects and Consequences

15.2.4.2.2.1 **Methods, Assumptions, and Conditions.** For the analysis for the original rated conditions (2436 MWt), the nonlinear dynamic model described in NEDO-10802[2] was used to simulate the trip of two recirculation pumps event. The minimum specified rotating inertia and a conservatively reduced void coefficient were assumed. The key analysis input parameters are identified in table 15.2-3.

15.2.4.2.2.2 **Results and Consequences.** Figure 15.2-12 shows the event with the minimum design rotating inertia from 105% of nuclear boiler rated steam flow conditions. MCPR remains above the initial operating limit of 1.30. High water level is reached at 4.76 s, causing a turbine trip, a trip of the feedwater pumps, and a reactor scram. The neutron flux and surface heat flux do not increase over the initial conditions; thus, fuel thermal margins are not affected. The pressure increases during the trip of two recirculation pumps do not significantly affect the RCPB.

15.2.4.2.2.3 **Consideration of Uncertainties.** Assuming the reactor is initially at limiting conditions conservatively forces the calculated results for this two-pump trip event to be more severe than actually expected. The actual rotating equipment inertia is also expected to be somewhat larger than the minimum design value assumed herein, thus, assuring the calculated results will be more severe than those actually expected.

15.2.4.3 Recirculation Flow Control Failure - Decreasing Flow (Event 15)

This evaluation, which was performed for the initial core for the original rated conditions (2436 MWt), demonstrated the recirculation flow control failure with decreasing flow is a nonlimiting AOO and does not require reevaluation for reloads.

15.2.4.3.1 Identification of Causes

15.2.4.3.1.1 Starting Conditions and Assumptions. This event starts at 105% of nuclear boiler rated steam flow power (2535 MWt) with thermally limiting conditions.

15.2.4.3.1.2 Event Description. Several possible flow controller malfunctions can cause a decrease in core coolant flow:

A. Either a downscale failure of the master flow controller or an excessive manual speed demand setpoint change can generate a zero flow demand signal to both recirculation flow control loops.

B. Failure of either an individual recirculation flow controller (one/loop) or the positioning servo in an individual scoop tube actuator can result in a rapid flow decrease in only one recirculation loop.

15.2.4.3.2 Analysis of Effects and Consequences.

The most severe condition (zero flow demand signals to both recirculation flow controls) was considered for this event.

15.2.4.3.2.1 Methods, Assumptions, and Conditions. For the analysis for the original rated conditions (2436 MWt), the nonlinear dynamic model described in NEDO-10802[2] was used to simulate the recirculation flow control failure with decreasing flow event. Additionally, recirculation loop flow was allowed to decrease. Minimum specified rotating inertia was assumed. Since the more negative void reactivity coefficient assumed for the pressurization transients is nonconservative for flow decreases, these events were evaluated with the reduced void coefficient multiplier given in table 15.2-3.

15.2.4.3.2.2 Results and Consequences. In the case of zero demand to both controllers, each M-G set speed controller has a rate limiter that limits the maximum rate of change of speed in each loop by limiting the integration rate of each speed controller. Thus, this transient can never be more severe than the simultaneous trip of both recirculation pumps. In the case of failure of one controller, the scoop tube positioners are designed so that the inherent limitation of their stroking rate is ~ 25%/s.

The results of this transient are similar to the trip of one recirculation pump and less severe than the transient that results from the simultaneous trip of both recirculation pumps. Thermal consequences are insignificant. Since pressure remains below the design level, no threat to the RCPB exists.

15.2.4.3.2.3 **Consideration of Uncertainties.** The key uncertainties for the recirculation flow control failure with decreasing flow event are the same as the key uncertainties for the trip of two recirculation pumps event discussed in paragraph 15.2.4.2.2.3.

15.2.5 INCREASE IN REACTOR CORE COOLANT FLOWRATE

15.2.5.1 Recirculation Flow Control Failure - Increasing Flow (Event 16)

This analysis, which was performed for the initial core for the original rated conditions (2436 MWt), demonstrated the recirculation flow control failure with a rapid increase in flow is a nonlimiting AOO and is not required to be reevaluated for reloads.

Two kinds of recirculation flow control failure with increasing flow are considered: a slow flow increase and a rapid increase in recirculation flow.

The slow recirculation flow increase is considered a potentially limiting AOO for plant operation at reduced recirculation flow conditions. The currently applicable analyses of the slow recirculation flow increase event to establish the core operating limits for reduced flow conditions were performed for the implementation of the ARTS program documented in NEDC-30474-P.[4] The applicability of the ARTS limits for reduced flow conditions is confirmed each reload.

The recirculation flow controller failure - increasing flow event was evaluated for power uprate at an RTP of 2763 MWt.[1] The results of the study demonstrated the following:

A. The maximum core flow runout is unchanged.

B. The slope of the maximum extended load line limit analysis (MELLLA) is unchanged.

C. The expected change in ΔCPR remains well within the margins provided by flow-dependent limits.

The following discussion provides the analysis results for the most rapid increase in recirculation flow.

15.2.5.1.1 Identification of Causes

15.2.5.1.1.1 **Starting Conditions and Assumptions.** The reactor is considered to be running at the low end of the rated flow control range (65% of nuclear boiler rated steam flow power and 50% core flow). This set of initial conditions results in the most severe event, considering the most rapid flow increase.

15.2.5.1.1.2 Event Description. Failure of the master flow controller can cause a speed increase for both recirculation pumps. However, both speed controllers have error limiters so that this case is less severe than the failure (maximum demand) of one M-G set speed controllers. A rapid swing of the couples is simulated at its maximum rate of 25%/s.

15.2.5.1.2 Analysis of Effects and Consequences

15.2.5.1.2.1 Methods, Assumptions, and Conditions. For the analysis for the original rated conditions (2436 MWt), the nonlinear dynamic model described in NEDO-10802[2] was used to simulate this event. The same void reactivity coefficient multiplier used for the pressurization transient was applied, since it increases the severity of the power increase. In addition, a conservative representation of the scram characteristics as shown in figure 15.2-13 was assumed. The key analysis input parameters are provided in table 15.2-3.

15.2.5.1.2.2 Results and Consequences. Figure 15.2-14 shows the results of the event due to the failure of one of the M-G set speed controllers. The changes in nuclear system pressure with regard to overpressure are insignificant. Pressure decreases for most of the event. The rapid increase in core coolant flow causes an increase in neutron flux, which initiates a reactor average power range monitor (APRM) high-flux scram.

The peak neutron flux rise reaches 264% of nuclear boiler rated flux, and the accompanying transient fuel surface heat flux reaches 84% of rated. This barely exceeds the steady-state recirculation flow-control line. MCPR remains considerably above the SLMCPR of 1.06, and fuel center temperature increases only 365°F.

15.2.5.1.2.3 Consideration of Uncertainties. Variations of coupler rate of change, void reactivity characteristics, scram time, and rod worth are all expected to be in the direction of reducing the severity of the event.

15.2.5.2 Startup of Idle Recirculation Pump (Event 17)

This evaluation, which was performed for the initial core for the original rated conditions (2436 MWt), demonstrated the startup of the idle recirculation pump is a nonlimiting AOO and does not require reevaluation for reloads.

The startup of an idle recirculation pump was considered in the development of the ARTS limits at reduced flow conditions for the implementation of the ARTS program documented in NEDC-30474-P.[4] For the ARTS program, the slow recirculation flow increase event was demonstrated to be more limiting than the startup of an idle recirculation loop. In the ARTS program analysis, the temperature between the recirculation loops was limited to 50°F, consistent with the Technical Specifications requirements.

15.2.5.2.1 Identification of Causes

15.2.5.2.1.1 **Starting Conditions and Assumptions.** The following starting conditions and assumptions apply to the startup of an idle recirculation event:

A. One drive loop is shut down and filled with cold water (100°F). (Plant procedures require warming this loop.)

B. In the active recirculation loop, ~ 72% of normal rated diffuser flow goes down through the active jet pumps.

C. The core is receiving 50% of its normal rated flow, while the remainder of the flow is reversed up through the inactive jet pumps.

D. Reactor power is 55% of nuclear boiler rated power conditions. (Plant procedures require start up of an idle loop at a lower power.)

E. The idle recirculation pump suction valve is open, but the pump discharge valve is closed.

F. The idle pump fluid coupler is at a setting that approximates 50% of generator speed demand.

15.2.5.2.1.2 **Event Description.** The loop startup sequence is as follows:

A. The pump is started at t = 0.

B. Initial power level and core flow are such that the initial reverse flow in the previously idle loop jet pump diffuser does not change back to normal flow. As a result, no flow direction change that will cause an increase in core inlet subcooling due to water from the cold loop reaching the core will occur.

15.2.5.2.2 Analysis of Effects and Consequences

15.2.5.2.2.1 **Methods, Assumptions, and Conditions.** For the analysis for the original rated conditions (2436 MWt), the nonlinear dynamic model described in NEDO-10802[2] was used to simulate this event. The void reactivity coefficient multiplier (positive reactivity insertion) used for pressurization events was also used in this analysis. The key analysis input parameters are provided in table 15.2-3.

15.2.5.2.2.2 **Results and Consequences.** The event response to the startup of an idle recirculation loop without warming the drive loop water is shown in figure 15.2-15. Shortly after the pump begins to move, a reduction in reverse flow at the activated jet pump diffuser gives the

75. 295015AA2.01 001

During an ATWS on Unit 2 the Operator performing RC-2 fails to close 2N21-F110, SULCV Bypass. RPV pressure subsequently drops to 400 psig with all injection systems still available.

Which ONE of the following describes the potential adverse consequences of this condition?

A. Core Spray injection will occur diluting boron flow.

B. Level will decrease and the MSIV's may close causing a loss of the main condenser and heat sink.

C. A significant power excursion could occur due to uncontrolled injection to the PRV.

D. Boron mixing will be prevented due to less flow in the downcomer.

References: LR-LP-20305 Rev. 04 pg 17 and 18 of 24

A. Incorrect since Core Spray will not dilute boron flow and Core Spray should not be injecting at 400 psig.

B. Incorrect since level will increase with this valve open.

C. Correct answer.

D. Incorrect since leaving this valve unisolated will not prevent Boron mixing.

RO Tier:	T1G1	SRO Tier:	T1G1
Keyword:	ATWS CONTROL	Cog Level:	MEM 4.1/4.3
Source:	B	Exam:	HT02301
Test:	C	Misc:	

QUESTIONS REPORT
for HT2002

1. 295015AA2.01 001

During an ATWS on Unit 2 the Operator performing RC-2 fails to close 2N21-F110, SULCV Bypass. RPV pressure subsequently drops to 400 psig with all injection systems still available.

Which ONE of the following describes the potential adverse consequences of this condition?

A. Core Spray injection will occur diluting boron flow.

B. Level will decrease and the MSIV's may close causing a loss of the main condenser and heat sink.

C. A significant power excursion could occur due to uncontrolled injection to the PRV.

D. Boron mixing will be prevented due to less flow in the downcomer.

References: LR-LP-20305 Rev. 04 pg 17 and 18 of 24

A. Incorrect since Core Spray will not dilute boron flow and Core Spray should not be injecting at 400 psig.

B. Incorrect since level will increase with this valve open.

C. Correct answer.

D. Incorrect since leaving this valve unisolated will not prevent Boron mixing.

Since the exact pressure at which the exhaust pressure trip actuates cannot be determined in advance, Caution 4 is stated in general terms.

NEW Caution # 5

This caution does not prohibit the use of HPCI or RCIC if they are needed, the caution is just a warning.
EO 13

E. CAUTION 5

Operation of HPCI or RCIC turbines with suction temperatures above 140°F may result in equipment damage.

The lube oil and control oil for both HPCI and RCIC are cooled by the water being pumped. Very high lube oil temperatures can result in loss of lubricating qualities in the oil and thus damage the bearings.

Since HPCI and RCIC can be operated from the torus, the effects of elevated torus temperature must be considered.

The new caution 6 was the old caution 7

Old Caution # 6, "Cooldown rates above 100 degree F/hr may be necessary to accomplish this step " has been deleted.

Old Caution # 6 was deleted since it provided authorization for exceeding normal operating limits rather than warning of a potential hazard. Instructions have been reworded to direct that prescribed actions be performed "irrespective of the resulting cooldown rate."

F. CAUTION 6

A rapid rise in injection into the RPV may induce a large power excursion and result in substantial core damage.

When RPV injection is directed by the EOPs with little or no shutdown margin, Caution 6 warns of the potential plant response if injection of cold, unborated water into the core is too rapid. A large increase in positive reactivity with attendant power excursion and substantial core damage is possible.

This caution applies to ATWS events where power has been reduced by lowering RWL, either deliberately as directed by EOPs, or unintentionally by leakage and/or loss of high pressure makeup.

EO 14

Over feeding of the RPV under these conditions can cause power to exceed 175% rated and result in possible fuel damage. The effects of rapidly injecting water to the RPV are:

- Cold water injected from the torus, CST, or hotwell may cause an excessive positive reactivity addition (large power excursion).
- Previously injected boron may be flushed out of the core or diluted momentarily (increasing reactor power).
- The resulting RWL increase may restore circulation up through the core and steam separators, down through the jet pumps, and may return the reactor to a natural circulation condition (increasing reactor power).

Pressure control problems resulting in RPV pressure cycling on SRVs will magnify power spikes due to positive reactivity feedback. This is another reason why RWL should be restored in a controlled manner.

G. CAUTION 7

EO 15

Reducing primary containment pressure will reduce the available NPSH for pumps taking a suction from the torus.

Hatch does NOT require containment overpressure.

Some plants take credit for containment overpressure to demonstrate adequate ECCS pump NPSH in certain licensing analyses. Since reducing primary containment pressure will reduce the available NPSH, pump NPSH requirements should be considered when containment sprays are operated.

Plant Hatch is not required to maintain overpressure in the containment, however, if primary containment pressure is reduced, the operator should be aware that NPSH will be affected.

22. 295016AK3.01 001

There is an electrical fire in the Control Room and black smoke has made the Control Room inaccessable. If possible, prior to leaving the Control Room the Reactor Operator inserts a manual Scram per *31RS-OPS-001-1S, Shutdown from Outside Control Room.*

Which ONE of the following describes why the procedure also has steps to Scram the reactor by de-energizing RPS or actuating the Scram Discharge Volume level switches?

A. The Technical Specifications require that Reactor Scram capability from outside the Control Room be maintained.

B. The FSAR requires the ability for prompt hot shutdown of the reactor from locations outside the Control Room.

C. The Technical Requirements Manual requires the capability to Scram the reac from outside the Control Room.

D. The capability for prompt hot shutdown of the reactor from outside the Control Room is not required but is a safe operating practice.

References: HNP-2-FSAR-3 pg 3.1-16 and 17.
HNP-2-FSAR-7 pg 7.5-5 thru 7.5-10.
Procedure 31RS-OPS-001-1S Rev. 3

A. Incorrect since Technical Specifications do not describe how to shutdown the plant from outside the control room.

B. Correct answer.

C. Incorrect since the Technical Requirements Manual does not describe how to shutdown the plant from outside the control room.

D. Incorrect since it is a requirement to be able to perform a prompt hot shutdown from outside the control room.

RO Tier:	T1G2	SRO Tier:	T1G1
Keyword:	REMOTE SHUTDOWN	Cog Level:	MEM 4.1/4.2
Source:	N	Exam:	HT02301
Test:	C	Misc:	

76. 295016AK3.01 001

There is an electrical fire in the Control Room and black smoke has made the Control Room inaccessable. If possible, prior to leaving the Control Room the Reactor Operator inserts a manual Scram per *31RS-OPS-001-1S, Shutdown from Outside Control Room.*

Which ONE of the following describes why the procedure also has steps to Scram the reactor by de-energizing RPS OR actuating the Scram Discharge Volume level switches?

A. The Technical Specifications require that Reactor Scram capability from outside the Control Room be maintained.

B. The FSAR requires the ability for prompt hot shutdown of the reactor from locations outside the Control Room.

C. The Technical Requirments Manual requires the capability to Scram the reactor from outside the Control Room.

D. The capability for prompt hot shutdown of the reactor from outside the Control Room is not required but is a safe operating practice.

References: HNP-2-FSAR-3 pg 3.1-16 and 17.
HNP-2-FSAR-7 pg 7.5-5 thru 7.5-10.
Procedure 31RS-OPS-001-1S Rev. 3

A. Incorrect since Technical Specifications do not describe how to shutdown the plant from outside the control room.

B. Correct answer.

C. Incorrect since the Technical Requirements Manual does not describe how to shutdown the plant from outside the control room.

D. Incorrect since it is a requirement to be able to perform a prompt hot shutdown from outside the control room.

RO Tier:	T1G2	SRO Tier:	T1G1
Keyword:	REMOTE SHUTDOWN	Cog Level:	MEM 4.1/4.2
Source:	N	Exam:	HT02301
Test:	C	Misc:	

QUESTIONS REPORT
for HT2002

1. 295016AK3.01 001

There is an electrical fire in the Control Room and black smoke has made the Control Room inaccessable. Prior to leaving the Control Room the Reactor Operator inserts a manual Scram per 31RS-OPS-001-1S, Shutdown from Outside Control Room. CHOOSE the answer that describes why the procedure also has steps to Scram the reactor by de-energizing RPS or actuating the Scram Discharge Volume level switches.

A. The Technical Specifications require that Reactor Scram capability from outside the Control Room be maintained.

B. ✓ The FSAR requires the ability for prompt hot shutdown of the reactor from locations outside the Control Room.

C. The Technical Requirments Manual requires the capability to Scram the reactor from outside the Control Room.

D. The capability for prompt hot shutdown of the reactor from outside the Control Room is not required but is a safe operating practice.

References: HNP-2-FSAR-3 pg 3.1-16 and 17.
HNP-2-FSAR-7 pg 7.5-5 thru 7.5-10.
Procedure 31RS-OPS-001-1S Rev. 3

A. Incorrect since Technical Specifications do not describe how to shutdown the plant from outside the control room.

B. Correct answer.

C. Incorrect since the Technical Requirements Manual does not describe how to shutdown the plant from outside the control room.

D. Incorrect since it is a requirement to be able to perform a prompt hot shutdown from outside the control room.

3.0 IMMEDIATE OPERATOR ACTIONS

3.1 PRIOR to leaving the control room, the plant operator will, IF possible, perform the following actions:

3.1.1 Enter 34AB-C71-001-1S, Scram Procedure, AND SCRAM the reactor.

3.1.2 IF the reactor is shutdown, THEN trip the Main Turbine AND perform placard TC-1.

3.1.3 PLACE level control in single element AND perform placard RC-2.

3.2 IF the control room is being evacuated due to a fire, OR if there is a fire anywhere, THEN enter 34AB-X43-001-1S.

3.3 The Shift Supervisor shall perform the following:

3.3.1 Announce over the PA the emergency situation.

3.3.2 Direct all operators to report to Remote Shutdown panel 1H21-P173.

3.3.3 Have two-way radios OR sound powered phones distributed to operators as required.

3.3.4 Contact HP AND have HP Techs report to Remote Shutdown panel to determine habitability AND to provide necessary coverage for shutdown operations.

NOTE

The STA shall utilize SPDS to confirm automatic actions, isolations, AND initiations occur.

3.4 The Shift Supervisor will station someone (preferably the STA) at the TSC to operate SPDS.

3.5 IF the process computer is available, THEN send someone to the computer room on the 147' elevation, IF habitable, to operate the process computer.

4.0 SUBSEQUENT OPERATOR ACTIONS

4.1 IF at ANY time a loss of offsite power OR loss of power to Essential buses occurs, THEN PERFORM 31RS-OPS-002-1S, Electrical Bus Recovery concurrently with this procedure.

4.2 IF, at anytime during performance of this procedure, manual closing OR opening of breakers without control power is necessary, THEN perform Attachment 1 of this procedure.

4.3 The Shift Supervisor will direct the control of RPV level, pressure AND power. These parameters will be controlled concurrently OR as close to concurrently as possible.

4.4 IF the reactor is NOT shutdown, THEN INSERT a scram by one OR more of the following methods.

4.4.1 De-energize RPS.

4.4.1.1 OPEN the following breakers at RPS distribution Panel 1C71-P001:

1C71-CB3A
1C71-CB3B

4.4.1.2 RECLOSE above breakers after both have been opened.

4.4.2 Scram Discharge Volume Level Switches.

4.4.2.1 Remove the covers to the level switches 1C11-N013A, B, C, AND D at the scram discharge volume.

4.4.2.2 Trip the level switches 1C11-N013A, B, C, AND D.

4.5 IF all control rods are NOT inserted, THEN INJECT boron BEFORE Suppression Pool temperature reaches 110°F using the following methods.

4.5.1 SBLC per 34SO-C41-003-1S

4.5.2 IF SBLC CANNOT be used, THEN use RCIC per 31RS-E51-001-1S.

4.6 IF SPDS is NOT available to confirm reactor shutdown, THEN Visually confirm that each SCRAM inlet AND outlet valve is OPEN.

7.5.1.4.2 Remote Shutdown Panel

The remote shutdown panel is located in the northwest corner of the reactor building at el 130 ft. The remote shutdown system panel is designed to comply with the requirements of Safety Class 3, Seismic Category I, and Quality Group C. The following systems have instrumentation and controls on the remote panel, as shown on drawing nos. A-21725 (sheets 1 and 2), A-21726 (sheets 1 through 8), H-51357, and H-51358.

- Reactor core isolation cooling (RCIC) system.
- Residual heat removal (RHR) system.
- Recirculation flow control system.
- Nuclear boiler system.
- Control rod drive system.
- RHR service water (RHRSW) system.
- Plant service water (PSW) system.
- Torus level and temperature.

To comply with GDC 19, the remote shutdown panels must be capable of bringing and maintaining the plant in a shutdown condition from the scenario described below in paragraph 7.5.1.4.3. The controls required to accomplish these actions involve RHR, RCIC, RHRSW, PSW, and the safety relief valves; and torus water level and temperature indications.

7.5.1.4.3 Conditions Assumed to Exist as the MCR Becomes Inaccessible

A. The plant is operating initially at, or less than, design power.

B. Loss of offsite ac power is considered unlikely but credible. The remote shutdown panel is powered from an essential bus so that standby ac power is automatically supplied by the diesel generator in the event of loss-of-offsite power. Manual controls of the diesel generator are also available in the diesel generator building.

C. A LOCA is not assumed; therefore, complete control of ESF systems from outside the MCR is not required.

D. Plant personnel evacuate the MCR.

E. The MCR continues to be inaccessible during the entire shutdown procedure.

F. The event that causes the MCR to become inaccessible is assumed to be such that the operator can manually scram the reactor before leaving the MCR. As a backup, the operator can manually scram the reactor locally by deenergizing the reactor protection system (RPS) power supplies.

G. The main turbine pressure regulators may be controlling reactor pressure via the bypass valves; however, in the interest of simplicity and safety, it is assumed that this function is lost. Therefore, main steam line isolation is assumed to occur at 850-psig turbine inlet pressure and RPV pressure is relieved through the safety relief valves to the suppression pool. The feedwater control system is also assumed to be unavailable due to reactor isolation.

H. Reactor water is made up by the RCIC system.

I. The dc services are supplied from at least one 125/250-V plant dc power system for each essential system or equipment item in the remote shutdown system.

7.5.1.4.4 Description

The system provides remote control for reactor systems needed to carry out the shutdown function from outside the MCR and to bring the reactor to cold condition in an orderly fashion. This system also provides a variation to the normal system used in the MCR, thus permitting the shutdown of the reactor when feedwater is unavailable and the normal heat sinks (turbine and condenser) are lost.

Automatic activation of safety relief valves and the RCIC system bring the reactor to a hot shutdown condition. During this phase of shutdown, the suppression pool is cooled by operating the RHR system in the suppression pool cooling mode. Reactor pressure is controlled, and core decay and sensible heat is rejected to the suppression pool by relieving steam pressure through the relief valves. RPV water inventory will be maintained by the RCIC system.

Manual operation of the safety relief valves cools the reactor and reduces its pressure at a controlled rate until RPV pressure becomes so low that the RCIC system discontinues operation. This condition is reached at 50- to 100-psig RPV pressure. The RHR system is then operated in the shutdown cooling mode wherein the RHR system heat exchanger is connected directly into the reactor water circuit to bring the reactor to the cold, low-pressure condition.

The only equipment requiring qualification to 10 CFR 50.49 in the remote shutdown panels are the control and transfer switches. Refer to the Plant Hatch Central File for the exact switches.

7.5.1.4.5 Procedure for Reactor Shutdown from Outside the MCR

A. If evacuation becomes necessary, the operator will scram the reactor by depressing the manual scram pushbuttons and placing the mode switch to shutdown.

B. If the reactor is shut down, the operator will trip the main turbine. The pressure regulator will, under normal conditions, control the reactor pressure while rejecting heat (steam) through the turbine bypass valves. The feedwater control system will control RPV water level.

C. If the reactor is not shut down, the operators will insert a manual scram either by opening breakers CB3A and CB3B at the RPS distribution panel or by tripping the scram discharge volume level magnetrol switches, 2C11-NO13A, B, C, and D. If these methods fail to shut down the reactor, the operator will initiate the standby liquid control system prior to suppression pool temperature reaching 110°F.

D. If indications exist of a group 1 isolation, operators will close the inboard main steam line isolation valves by opening breaker CB5A in RPS distribution cabinet 2C71-P001 and by opening breaker 17 in distribution cabinet 2R25-S001. If the main steam line isolation valves are closed, the RCIC system will be used to control RPV water level.

E. Transfer switches at the key-controlled remote panel will be operated to transfer control to the remote shutdown panel.

F. Safety relief valve operation will be as indicated on drawing no. H-26000. RPV water level will start to drop rapidly or slowly depending on prior power level and elapsed time from scram.

G. The operator will start the RCIC system manually before level 2 (drawing nos. H-26000 and H-26001) is reached and will monitor the water level thereafter. The water level will continue to fall.

H. RPV water level will reach its lowest point at about 444-in. above vessel zero if the RCIC system was initiated at low level. The level will then start to rise as a result of RCIC system flow. Pressure relief will be through one safety relief valve in automatic intermittent operation.

I. RPV water level will be returned to normal by operation of the RCIC system.

J. One safety relief valve will still be in automatic intermittent operation. The RCIC system turbine will automatically trip.

K. Reduction of RPV pressure will be started by manually actuating one safety relief valve. While activating the safety relief valves, the operator will observe the RPV water level and suppression pool temperature.

L. Safety relief valves will be closed off when level drops below level alarm point. The reactor cooldown rate will not exceed 100°F/h. RPV water level varies between low-alarm point and high-alarm point.

M. The RHR system with one pump, one heat exchanger, and the associated service water system will be used to cool the suppression pool.

N. The operator will activate two safety relief valves to maintain reduction of pressure to 250 psig while observing that pool temperatures do not exceed 140°F, unless the reactor pressure decreases to < 250 psig.

O. RPV pressure will be reduced to 100 psig while assuring that the suppression pool temperature does not exceed 170°F.

P. The RHR system will be placed in the shutdown cooling mode and the system flushed for several minutes by pumping water into the suppression pool before returning it to the RPV. RHR operation will continue until the reactor is in the cold, low-pressure condition.

Q. Normal RPV water level will be maintained after being placed in the shutdown cooling mode.

7.5.2 ANALYSIS

The safety-related and power generation display instrumentation provides adequate information to allow operators to make correct decisions as bases for manual control actions permitted under normal, AOO, and accident conditions.

Information instrumentation having no direct input to ESF systems, except through the operator as a link, is considered to be outside the scope of existing IEEE standards. However, insofar as practical, instruments are selected from those types qualifiable under IEEE Standard 279-1971 and IEEE Standard 323-1971. Redundancy and independence or diversity are provided in all of those information systems used for the basis of operator-controlled safeguards action.

The RPV water level and pressure transmitters are mounted on local panels. The transmitters are designed to operate during normal operation, accident, and post-accident environmental conditions. There are two complete and independent channels of wide-range RPV water level and pressure with each channel having its readout on a separate recorder. The recorders are located in the MCR on the emergency core cooling system (ECCS) benchboard. One recorder is with the Division I systems, and the other recorder is with the Division II systems.

The accuracy of the RPV water level and pressure indicators in the MCR is ± 2.0% of monitored range. The design is adequate to provide for accurate reactor water level and reactor pressure information during normal operation, AOO, and accident conditions.

7.5.2.1 Normal Operation

Subsection 7.5.1 describes the basis for selecting ranges for instrumentation and, inasmuch as AOO or accident conditions monitoring requirements exceed those for normal operation, the normal ranges are covered adequately.

7.5.2.2 AOOs

AOOs will result in conditions lesser in consequence than those defined to be accident conditions in paragraph 7.5.2.3. Proper accident tracking, therefore, qualifies AOO tracking.

The variety of indications that may be utilized to verify that shutdown and isolation safety actions have been accomplished as required (paragraph 7.5.1.3.2) are considered adequate to comply with requirements of IEEE Standard 279-1971.

7.5.2.3 Accidents

The LOCA is the most extreme operational event. Information readouts are designed to accommodate this event from the standpoint of operator action, information, and event-tracking requirements, therefore, covering all other design basis events or incident requirements.

7.5.2.3.1 Initial Accident Event

The design basis of all ESFs to mitigate accident conditions takes into consideration that no operator action or assistance is required or recommended for the first 10 min of the event. This requirement makes it mandatory that all protective action necessary in the first 10 min be automatic. Therefore, although continuous tracking of variables is available, no operator action based upon them is intended.

7.5.2.3.2 Post-Accident Tracking

Operator action is optional after 10 min. RPV water level and pressure, and ECCS process instrumentation provide information to the operator after a design basis accident (DBA) for use in monitoring reactor conditions within the primary containment.

A. RPV Water Level and Pressure

RPV water level and pressure instrumentation, described in paragraph 7.5.1.3.2, is redundant, electrically independent, and operable during and after a LOCA. Power is from independent instrument buses powered from the essential ac buses. This instrumentation complies with independence and redundancy requirements of IEEE Standard 279-1971.

B. ECCS Process Instrumentation

Performance of emergency core cooling following an accident may be verified by observing redundant and independent indications as described in paragraph 7.5.1.3.2 and fully satisfies the need for post-accident surveillance of these variables. The redundancy and independence provided is such as to meet the single-failure criteria of IEEE Standard 279-1971 and to obtain a high degree of reliability.

7.5.2.4 Special Event - Shutdown from Outside the MCR

Analysis of reactor shutdown from outside the MCR is included in paragraph 7.5.1.4.

7.5.3 INFORMATION SYSTEMS IMPORTANT TO SAFETY (HNP-1 AND HNP-2)

7.5.3.1 Introduction

This section describes Regulatory Guide (RG) 1.97 requirements, as well as the HNP-1 and HNP-2 safety-related and nonsafety-related information systems that are required to assure compliance with RG 1.97, Revision 2. Conformance to RG 1.97 requirements is provided by HNP-1 and HNP-2 instrumentation listed in table 7.5-1. Master parts list (MPL) numbers preceded by a unit designator identify instrumentation. Instrumentation located in both HNP-1 and HNP-2 with identical MPL numbers is preceded by a 1, 2.

7.5.3.2 Description of Information Systems

The safety analysis and evaluations define the DBA event scenarios for which preplanned operator actions are required. Accident-monitoring instrumentation is necessary to permit the operator to take required actions to address these analyzed situations. Instrumentation is needed to determine that safety systems are functioning properly and to provide information on radioactive releases. Instrumentation is also necessary for unforeseen situations (i.e., to ensure that, should plant conditions evolve differently than predicted by the safety analyses, the MCR operating staff has sufficient information to evaluate and monitor the course of the event). Additional instrumentation is also needed to indicate to the operating staff whether the integrity of the fuel cladding, the reactor coolant pressure boundary (RCPB), or the reactor primary containment has degraded beyond the prescribed limits defined in the plant safety analyses and other evaluations.

RG 1.97 has identified five classifications (types) of variables to provide this instrumentation. Each type of variable is discussed further in paragraph 7.5.3.3

Three categories of design and qualification are identified in RG 1.97, Revision 2.

Criterion 19 - Control Room

"A control room shall be provided from which actions can be taken to operate the nuclear power unit safely under normal conditions and to maintain it in a safe condition under accident conditions, including loss-of-coolant accidents. Adequate radiation protection shall be provided to permit access and occupancy of the control room under accident conditions without personnel receiving radiation exposures in excess of 5 rem whole body, or its equivalent to any part of the body, for the duration of the accident.

Equipment at appropriate locations outside the control room shall be provided (1) with a design capability for prompt hot shutdown of the reactor, including necessary instrumentation and controls to maintain the unit in a safe condition during hot shutdown and (2) with a potential capability for subsequent cold shutdown of the reactor through the use of suitable procedures."

Design Evaluation

A control room has been provided in which appropriate controls and instrumentation are located to permit personnel to safely operate the unit under normal conditions or maintain it in a safe condition under accident conditions. The MCR and associated post-accident ventilation systems are designed in accordance with Category I requirements.

The design of the control room permits access and occupancy during a LOCA. Previous analyses demonstrate that the LOCA is the limiting event for radiological exposures to operators in the MCR. Therefore, for power uprate conditions (2763 MWt), only the LOCA was analyzed for MCR radiological exposures. Sufficient shielding and ventilation are provided to permit occupancy of the control room for a period of 30 days following the LOCA, without receiving more than 5-rem integrated whole-body dose or its equivalent to any part of the body. An analysis of exposures within the control room is presented in section 15.3.

The ability for prompt hot shutdown of the reactor and the potential capability for subsequent cold shutdown through the use of suitable procedures from locations outside the control room is provided by the remote shutdown system, should the control room become inaccessible. The remote shutdown system has the capability for prompt hot shutdown of the reactor, including necessary instrumentation and control to maintain the unit in a safe condition during hot shutdown, and subsequent cold shutdown of the reactor through use of administrative procedures. The remote shutdown system panel contains controls for the following equipment:

A. RHR system - The controls for one loop of the RHR system are provided on the remote shutdown panel. All modes of the RHR system operation, low-pressure coolant injection (LPCI), suppression pool cooling, containment spray cooling, and shutdown cooling can be operated from the remote shutdown panel.

B. RCIC system - All basic RCIC equipment can be controlled from the remote shutdown panel.

C. *Reactor recirculation system - The suction valve of one recirculation pump can be controlled from the remote shutdown panel.*

D. *Automatic depressurization system (ADS) - Two manual blowdown valves can be operated from the remote shutdown panel.*

In addition, the diesel generator can be operated from the local panel in the diesel generator building.

Criterion 20 - Protection System Functions

"The protection system shall be designed (1) to initiate automatically the operation of appropriate systems including the reactivity control system, to assure that specified acceptable fuel design limits are not exceeded as a result of anticipated operational occurrences and (2) to sense accident conditions and to initiate the operation of systems and components important to safety."

Design Evaluation

The RPS is designed to provide timely protection against the onset and consequences of conditions that threaten the integrity of the fuel barrier and nuclear system process barrier. Fuel damage is prevented by initiation of an automatic reactor shutdown if monitored nuclear system variables exceed preestablished limits of AOOs. Scram trip settings are selected and verified to be far enough above or below operating levels to provide proper protection but not be subject to spurious scrams. The RPS includes the motor-generator power system, sensors, relays, bypass circuitry, and switches that signal the control rod system to scram and shutdown the reactor. The scrams initiated by NMS variables, nuclear system high-pressure, turbine stop valve closure, turbine control valve fast closure, and reactor vessel low water level prevent fuel damage following AOOs. Specifically, these process parameters initiate a scram in time to prevent the core from exceeding thermal-hydraulic safety limits during AOOs. Response by the RPS is prompt, and the total scram time is short.

A fully withdrawn control rod (withdrawn to 144 in.) traverses 90% of its full stroke in less than 5 s, which is sufficient to assure that acceptable fuel-design limits are not exceeded.

In addition to the RPS which provides for automatic shutdown of the reactor to prevent fuel damage, protection systems are provided to sense accident conditions and initiate automatically the operation of other systems and components important to safety. Subsystems, such as the ECCS, are initiated automatically to limit the extent of fuel damage following a LOCA. Other systems automatically isolate the reactor vessel or the primary containment to limit the extent of fuel damage following a postulated LOCA and prevent the release of significant amounts of radioactive material from the fuel and the nuclear system process barrier. The control and instrumentation for the ECCS and the isolation systems are initiated automatically when monitored variables exceed preselected operational limits.
The design of the protection system satisfies the functional requirements as specified in GDC 20.

For further discussion, see sections 4.2, 6.3, 7.2, 7.3, and 7.6 and chapter 15.

78. 295018AK2.02 001

Unit 1 is in the process of increasing to full load after a refueling outage when a complete loss of stator cooling occurs. The following conditions existed just prior to the loss of stator cooling:

Generator output	650 MWe
Stator current	17000 amps
Stator cooling disch press	90 psig
Stator cooling conductivity	.5 micro mho

Which ONE of the following is the appropriate plant response?

A. The turbine will immediately trip causing a reactor scram.

B. The turbine will trip if it does not complete a runback to less then 24% load in two minutes.

C.✓ The turbine will trip if stator amps are not less than 4500 amps within 3.5 minutes.

D. The turbine will trip if stator amps are not less thatn 15,000 amps within two minutes and less than 4500 amps within 3.5 minutes. (total time = 3.5 minutes)

References: SI-LP-02301 Rev. SI-00, pg 13 of 21
EO 023.001.c.05

A. Incorrect since a complete loss of stator cooling does not cause an immediate turbine trip.

B. Incorrect since the runback does not need to be complete until 3.5 minutes have elapsed. Initial amps are less than 19080 so the 2 minute timer does not start.

C. Correct answer.

D. Incorrect since 2 minute timer is not in effect.

RO Tier:	T1G2	SRO Tier:	T1G2
Keyword:	STATOR COOLING	Cog Level:	MEM 3.4/3.6
Source:	M	Exam:	HT02301
Test:	C	Misc:	

QUESTIONS REPORT
for HT2002

1. 295018AK2.02 001

Unit 1 is in the process of increasing to full load after a refueling outage when a complete loss of stator cooling occurs. The following conditions existed just prior to the loss of stator cooling:

Generator output	650 MWe
Stator current	17000 amps
Stator cooling disch press	90 psig
Stator cooling conductivity	.5 micro mho

SELECT the appropriate plant response:

A. The turbine will immediately trip causing a reactor scram.

B. The turbine will trip if it does not complete a runback to less then 24% load in two minutes.

C. The turbine will trip if stator amps are not less than 4500 amps within 3.5 minutes.

D. The turbine will trip if stator amps are not less thatn 15,000 amps within two minutes and less than 4500 amps within 3.5 minutes. (total time = 3.5 minutes)

References: SI-LP-02301 Rev. SI-00, pg 13 of 21
EO 023.001.c.05

A. Incorrect since a complete loss of stator cooling does not cause an immediate turbine trip.

B. Incorrect since the runback does not need to be complete until 3.5 minutes have elapsed. Initial amps are less than 19080 so the 2 minute timer does not start.

C. Correct answer.

D. Incorrect since 2 minute timer is not in effect.

GENERATOR PROTECTION CIRCUIT ENERGIZED identifies that a low Stator Cooling Pump Discharge Pressure of 26# OR a High Generator return water temperature of 81°C in conjunction with a generator output amperage of greater than 5773 amps. Either of these conditions energizes the Generator Protection Circuit and causes the following action to occur:

Automatic runback of the Generator load to 24%.

- If initially greater than or equal to 19080 amps and stator current is not less than 15000 amps within 2 minutes and less than 4500 amps within 3.5 minutes, a turbine trip will occur.

- If initially less than 19080 amps and stator current is not less than 4500 amps within 3.5 minutes, a turbine trip will occur. Note: The two minute timer is not energized.

GENERATOR PROTECTION CIRCUIT DC FAILURE indicates a loss of DC power to the runback circuit and 2N43-P001 annunciators.

CONDUCTIVITY ABOVE 9.9 MICROMHO indicates a dangerously high conductivity in the Stator Cooling System. Turbine Generator tripping will be required once this condition is confirmed.

VI. Integrated System Response

The scenarios contained in this section are provided to allow the student to evaluate his retention of the previously covered material and to practice application of this knowledge when answering questions concerning integrated system response.

A. Scenario 1

Unit 2 is operating at 100% when 600 VAC Bus 2A (2R23-S001) is lost.

Question Will continued operation at 100% power be possible?

Answer Yes, the Standby Water Cooling water pump should pickup at 110# and continue to operate. 2B powered from 600VAC Bus 2B (2R23-S002)

B. Scenario 2

U1 is operating at 20% power when the Main Generator trips on high differential current.

Question # LT-LP-023001-0006 **Objective:** 023.001.C.05

Media # LR-LP-02301-02

The Unit Two Main Generator is tied to the grid at 810 MWe, when a complete loss of stator cooling occurs. SELECT the appropriate plant response:

a. The turbine will immediately trip causing a reactor scram.

b. The turbine will trip if it does not complete a runback to less than 24% load in two minutes.

c. The turbine will trip if stator amps are not less than 15,000 amps within two minutes and less than 4500 amps 3.5 minutes later. (total time = 5.5 minutes)

d. The turbine will trip if stator amps are not less than 15,000 amps within two minutes and less than 4500 amps within 3.5 minutes. (total time = 3.5 minutes)

Answer: D (1.00 pt)

23. 295021AK2.05 001

The following conditions exist on Unit 1:

Reactor is in Condition 5
"B" RHR Pump in Fuel Pool Cooling Assist
Reactor cavity is flooded
Fuel Pool gates are removed
Fuel shuffle has just been completed

The supply breaker to 1B RHR Pump has tripped and cannot be reclosed. Fuel Pool temperature starts to increase.

Which ONE of the following is the most appropriate action to lower Fuel Pool temperature?

A. Place the "A" RHR Pump in Fuel Pool Cooling Assist.

B. Feed the Unit 1 Fuel Pool by opening 1G41-F041, Spent Fuel Pool Make-up from CST.

C. Place the "D" RHR Pump in Fuel Pool Cooling Assist.

D. Remove the transfer canal gates and feed the Unit 2 Fuel Pool by opening 2G41-F054, Spent Fuel Pool Make-up from CST.

References: Procedure 34AB-G41-001-1S Rev. 2, Loss of Fuel Pool Cooling pg 2 & 3 of 12.
Procedure 34SO-E11-010-2S Rev. 30.3, Residual Heat Removal System pg 65 of 238.
Procedure 34AB-E11-001-1S Rev. 3, Loss of Shutdown Cooling pg 4 of 19.

A. Incorrect since "A" RHR Pump cannot be used for Fuel Pool Cooling Assist.

B. Incorrect since feeding the Unit 1 Fuel Pool is allowed when there are no other means of cooling available.

C. Correct answer.

D. Incorrect since feeding the Unit 2 Fuel Pool is allowed when feeding Unit 1 Fuel Pool cannot be established.

QUESTIONS REPORT
for Revision2 HT2002

RO Tier:	T1G3	SRO Tier:	T1G2
Keyword:	SHUTDOWN COOLING	Cog Level:	C/A 2.7/2.8
Source:	N	Exam:	HT02301
Test:	C	Misc:	

80. 295021AK2.05 001

The following conditions exist on Unit 1:

Reactor is in Condition 5
"B" RHR Pump in Fuel Pool Cooling Assist
Reactor cavity is flooded
Fuel Pool gates are removed
Fuel shuffle has just been completed

The supply breaker to bus 1B RHR Pump has tripped and cannot be reclosed. Fuel Pool temperature starts to increase.

Which ONE of the following is the most appropriate action to lower Fuel Pool temperature?

A. Place the "A" RHR Pump in Fuel Pool Cooling Assist.

B. Feed the Unit 1 Fuel Pool by opening 1G41-F041, Spent Fuel Pool Make-up from CST.

C. Place the "D" RHR Pump in Fuel Pool Cooling Assist.

D. Remove the transfer canal gates and feed the Unit 2 Fuel Pool by opening 2G41-F054, Spent Fuel Pool Make-up from CST.

References: Procedure 34AB-G41-001-1S Rev. 2, Loss of Fuel Pool Cooling pg 2 & 3 of 12.
Procedure 34SO-E11-010-2S Rev. 30.3, Residual Heat Removal System pg 65 of 238.
Procedure 34AB-E11-001-1S Rev. 3, Loss of Shutdown Cooling pg 4 of 19.

A. Incorrect since "A" RHR Pump cannot be used for Fuel Pool Cooling Assist.

B. Incorrect since feeding the Unit 1 Fuel Pool is allowed when there are no other means of cooling available.

C. Correct answer.

D. Incorrect since feeding the Unit 2 Fuel Pool is allowed when feeding Unit 1 Fuel Pool cannot be established.

QUESTIONS REPORT
for HT2002

RO Tier:	T1G3	SRO Tier:	T1G2
Keyword:	SHUTDOWN COOLING	Cog Level:	C/A 2.7/2.8
Source:	N	Exam:	HT02301
Test:	C	Misc:	

QUESTIONS REPORT
for HT2002

1. 295021AK2.05 001

The following conditions exist on Unit 1:

Reactor is in Condition 5
"B" RHR Pump in Fuel Pool Cooling Assist
Reactor cavity is flooded
Fuel Pool gates are removed
Fuel shuffle has just been completed

The supply breaker to bus 1B RHR Pump has tripped and cannot be reclosed. Fuel Pool temperature starts to increase. SELECT the most appropriate action to lower Fuel Pool temperature.

A. Place the "A" RHR Pump in Fuel Pool Cooling Assist.

B. Feed the Unit 1 Fuel Pool by opening 1G41-F041, Spent Fuel Pool Make-up from CST.

C. Place the "D" RHR Pump in Fuel Pool Cooling Assist.

D. Remove the transfer canal gates and feed the Unit 2 Fuel Pool by opening 2G41-F054, Spent Fuel Pool Make-up from CST.

References: Procedure 34AB-G41-001-1S Rev. 2, Loss of Fuel Pool Cooling pg 2 & 3 of 12.
Procedure 34SO-E11-010-2S Rev. 30.3, Residual Heat Removal System pg 65 of 238.
Procedure 34AB-E11-001-1S Rev. 3, Loss of Shutdown Cooling pg 4 ~~& 5~~ of 19.

A. Incorrect since "A" RHR Pump cannot be used for Fuel Pool Cooling Assist.

B. Incorrect since feeding the Unit 1 Fuel Pool is allowed when there are no other means of cooling available.

C. Correct answer.

D. Incorrect since feeding the Unit 2 Fuel Pool is allowed when feeding Unit 1 Fuel Pool cannot be established.

4.8 IF one loop of the RHR System becomes unavailable for Shutdown Cooling, perform the appropriate actions according to the following Table:

IF	THEN
Prior to the loss of SDC, Reactor coolant temperature was ≥ 212°F	PLACE in service the available RHR loop per the Shutdown Cooling Mode (Condition 3) subsection of 34SO-E11-010-1S, Residual Heat Removal System. As time permits, RETURN the unavailable loop to standby.
Prior to the loss of SDC, Reactor coolant temperature was < 212°F AND RHR SDC is NOT immediately needed to prevent Reactor coolant from exceeding 212°F	PLACE in service the available RHR loop per the Shutdown Cooling Mode (Condition 4 and 5) subsection of 34SO-E11-010-1S, Residual Heat Removal System. As time permits, RETURN the unavailable loop to standby.
Prior to the loss of SDC, Reactor coolant temperature was < 212°F AND RHR SDC is immediately needed to prevent Reactor coolant from exceeding 212°F	START the available RHR loop in SDC by performing Attachment 4 of this procedure. As time permits, RETURN the unavailable loop to standby.

4.9 IF the Reactor Vessel Head AND Spent Fuel Pool Gates are removed (refueling condition), AND Spent Fuel Pool temperatures are increasing, enter 34AB-G41-001-1S, Loss of Fuel Pool Cooling.

4.10 With vessel head in place, attempt to use the Main Condenser as heat sink by performing one of the following:

4.10.1 IF reactor pressure is sufficient for establishing steam seals, perform the following:

4.10.1.1 IF MSIVs are open, establish steam seals to turbine per 34SO-N33-001-1S, Seal Steam System.

4.10.1.2 IF MSIVs are isolated, but can be opened, perform the following steps:

4.10.1.2.1 PLACE Condenser Low Vacuum Trip Bypass switches 1A71-S34A, B, C, AND D on panel 1H11-P609 AND 1H11-P611 to bypass position, IF necessary.

4.10.1.2.2 OPEN Outboard MSIVs AND equalize around AND OPEN inboard MSIVs per 34GO-OPS-001-1S, IF necessary.

4.10.1.2.3 Establish steam seals to turbine per 34SO-N33-001-1S, Seal Steam System.

7.4.3 RHR ASSISTED FUEL POOL COOLING

CONTINUOUS

7.4.3.1 Confirm that the reactor is in Condition 5.

7.4.3.2 Confirm that the reactor cavity is flooded AND that the Fuel Pool gates are removed.

7.4.3.3 Confirm that the RHR System Loop B is available for Shutdown Cooling mode.

7.4.3.4 Notify Maintenance to position spectacle flanges to connect RHR to Fuel Pool Cooling System.

7.4.3.5 PLACE the 'B' LOOP OF RHR System in Shutdown Cooling in accordance with the Shutdown Cooling Mode (condition 4 & 5) subsection of this procedure.

7.4.3.6 SHUTDOWN the Fuel Pool Cooling System in accordance with the SHUTDOWN subsection of 34SO-G41-003-2S AND RETURN to step 7.4.3.7 of this procedure.

7.4.3.7 OPEN 2G41-F017, Skimmer Tank to RHR Valve, at 185RFR22.

7.4.3.8 OPEN 2G41-F034, RHR Discharge to FPC Valve, at 185RFR21.

7.4.3.9 Confirm that the RHR flow to the Fuel Pool Cooling System is approximately 1700 GPM as read on 2G41-R602, RHR To FPCU Sys Flow indicator, at panel 2H11-P654.

7.4.3.10 WHEN RHR is no longer required for Fuel Pool cooling, CLOSE 2G41-F034, RHR Discharge to FPC Valve, at 185RFR21.

7.4.3.11 CLOSE 2G41-F017, Skimmer Tank to RHR Valve, at 185RFR22.

7.4.3.12 PLACE the Fuel Pool Cooling Loop in service in accordance with 34SO-G41-003-2S.

7.4.3.13 SHUTDOWN the 'B' Loop of RHR System in accordance with Shutdown From The Shutdown Cooling Mode subsection of this procedure.

7.4.3.14 Notify Maintenance to position spectacle flanges to separate RHR from Fuel Pool Cooling System.

7.4.3.15 IF desired, PLACE the 'B' loop of RHR System in Shutdown Cooling mode, OR Standby condition per applicable subsection of this procedure.

4.3 IF the FPC pumps are running, AND fuel pool temperature is increasing, enter 34AB-P42-001-1S, Loss of Reactor Building Closed Cooling Water.

NOTE

Removal of the Spent Fuel Pool transfer canal gates will require use of the Refueling Floor crane (EITHER Unit 1 OR Unit 2). Both Refueling Floor cranes are powered from 600V "1D". IF 600V bus "1D" is lost AND recovered, resetting of the non-essential load lock out is required AND THEN manually resetting breaker 1T31-E005 (frame 7T) in the 600V "1D" switchgear room in the Control Building.

4.4 Ensure Unit Two FPC System is in service, THEN REMOVE the transfer canal gates.

4.5 IF the FPC system cannot be restored, have I&C install two (2) calibrated temporary digital temperature monitoring instruments with thermocouples in the fuel pool, approximately 10 feet deep, 1 at each skimmer surge tank, AND log the readings in the operator's log once per hour.

4.6 IF available, the Decay Heat Removal System may be placed in service per 34SO-G71-001-0S, Decay Heat Removal. IF the Decay Heat Removal System is installed on Unit 2, THEN REMOVE the transfer canal gates AND place the system in service aligned to the Unit 2 Spent Fuel Pool.

4.7 IF no other means of cooling is available, FEED and BLEED the fuel pool by performing the following, WHILE maintaining the fuel pool in the normal band.

4.7.1 FEED using one OR more of the these methods, as required:

4.7.1.1 OPEN 1G41-F041, Spent Fuel Pool Make-up from CST.

4.7.1.2 Demin water from local hose stations.

4.7.1.3 Fire Protection water from local hose station.

4.7.1.4 Plant Service Water by opening the following valves:

- 1P41-F070A OR 1P41-F070B (Reactor Bldg elv. 130' S.E. D/W wall right of CRD Hatch, locked valves),
- 1P41-F103 (Reactor Bldg elv. 203' S.W. Corner 5 feet from floor),
- 1G41-F217 (Reactor Bldg elv. 203' east on the S.W. Wall, locked valve).

4.7.1.5 IF Fire Water is the only available source of makeup water to restore Spent Fuel Pool Level, and access to the Refueling Floor is denied (for security, radiation or other personnel safety issues), THEN establish a flowpath for injection of Fire Water through Plant Service Water piping to the Unit 1 Spent Fuel Pool by performing the actions listed in Attachment 4 (the Shift Supervisor will determine which PSW division will be utilized).

4.7.2 IF FEED to the Unit 1 Spent Fuel Pool cannot be established, THEN REMOVE the transfer canal gates AND attempt to FEED the Unit 2 Spent Fuel Pool by using one OR more of these methods:

4.7.2.1 OPEN 2G41-F054, Spent Fuel Pool Make-up from CST.

4.7.2.2 Demin water from local hose stations.

4.7.2.3 Fire Protection water from local hose stations

4.7.2.4 Plant Service Water by opening the following valves

- 2P41-F070A OR 2P41-F070B (Reactor Bldg elv. 130' east wall),
- 2P41-F073 (Reactor Bldg elv. 185' east side N.W. area 10 feet up, locked valve),
- 2G41-F040 (Reactor Bldg elv. 203' west wall 10 feet up, locked valve).

4.7.2.5 IF Fire Water is the only available source of makeup water to restore Spent Fuel Pool Level, and access to the Refueling Floor is denied (for security, radiation or other personnel safety issues), THEN establish a flowpath for injection of Fire Water through Plant Service Water piping to the Unit 2 Spent Fuel Pool by performing the actions listed in Attachment 5 (the Shift Supervisor will determine which PSW division will be utilized).

4.7.3 BLEED using one OR more of the following methods, as required.

- OPEN 1G41-F017A(B) AND 1G41-F018 (Lowers to CST)
- OPEN 1G41-F015A(B) AND 1G41-F016 (Lowers to Waste Surge Tank)
- OPEN 1G41-F013A(B) AND 1G41-F014 (Lowers to Condenser Hotwell)

4.8 IF desired, PLACE RHR System in the fuel pool assist mode per 34SO-E11-010-1S, Residual Heat Removal System.

4.9 WHEN desired, return affected systems/components to service per the applicable System Operating Procedures at the direction of the Shift Supervisor.

24. 295022G2.1.30 001

Unit 2 CRD pump B has been started from the Remote Shutdown Panel. A System Operator (SO) checking the status of the CRD pump reports the following:

CRD Pump B is running.
CRD Pump B suction valve is closed.
CRD Pump B discharge pressure is about 200 psig.
CRD Pump B suction pressure is downscale.

Which ONE of the following describes how the CRD pump should have responded?

A.✓ SHOULD have started but auto tripped on low suction pressure.

B. SHOULD have started but auto tripped on low discharge pressure.

C. SHOULD NOT have auto tripped because the low suction pressure trip is presently bypassed.

D. SHOULD NOT have auto tripped because the low discharge pressure trip is presently bypassed.

References: SI-LP-05201-00 Rev. 00 Table 8
SI-LP-00101-00 Rev. SI-00 pg 15-17 of 46

A. Correct answer.

B. Incorrect since the CRD pump doesn't have a trip for low discharge pressure.

C. Incorrect since the CRD pump should have tripped on low suction pressure. The LOCA pump trip is bypassed when taking the RSP switch to Emergency and not the low suction pressure trip.

D. Incorrect since the CRD pump should have tripped on low suction pressure. The CRD pump doesn't have a low discharge pressure trip.

RO Tier:	T1G2	SRO Tier:	T1G2
Keyword:	CRD PUMP TRIP	Cog Level:	C/A 3.9/3.4
Source:	B	Exam:	HT02301
Test:	C	Misc:	

81. 295022G2.1.30 001

Unit 2 CRD pump B has been started from the Remote Shutdown Panel. A PEO checking the status of the CRD pump reports the following:

CRD Pump B is running.
CRD Pump B suction valve is closed.
CRD Pump B discharge pressure is about 200 psig.
CRD Pump B suction pressure is downscale.

Which ONE of the following describes how the CRD pump should have responded?

A. SHOULD have started but auto tripped on low suction pressure.

B. SHOULD have started but auto tripped on low discharge pressure.

C. SHOULD NOT have auto tripped because the low suction pressure trip is presently bypassed.

D. SHOULD NOT have auto tripped because the low discharge pressure trip is presently bypassed.

References: SI-LP-05201-00 Rev. 00 Table 8
SI-LP-00101-00 Rev. SI-00 pg 15-17 of 46

A. Correct answer.

B. Incorrect since the CRD pump doesn't have a trip for low discharge pressure.

C. Incorrect since the CRD pump should have tripped on low suction pressure. The LOCA pump trip is bypassed when taking the RSP switch to Emergency and not the low suction pressure trip.

D. Incorrect since the CRD pump should have tripped on low suction pressure. The CRD pump doesn't have a low discharge pressure trip.

RO Tier:	T1G2	SRO Tier:	T1G2
Keyword:	CRD PUMP TRIP	Cog Level:	C/A 3.9/3.4
Source:	B	Exam:	HT02301
Test:	C	Misc:	

50. 295022G2.1.30 001

Unit 2 CRD pump B has been started from the Remote Shutdown Panel. A PEO checking the status of the CRD pump reports the following:

CRD Pump B is running.
CRD Pump B suction valve is closed.
CRD Pump B discharge pressure is about 200 psig.
CRD Pump B suction pressure is downscale.

DETERMINE how the CRD pump should have responded to the listed conditions. The CRD Pump:

A. SHOULD have tried to start but auto tripped on low suction pressure.

B. SHOULD have tried to start but auto tripped on low discharge pressure.

C. SHOULD NOT have auto tripped because the low suction pressure trip is presently bypassed.

D. SHOULD NOT have auto tripped because the low discharge pressure trip is presently bypassed.

References: SI-LP-05201-00 Rev. 00 Table 8
SI-LP-00101-00 Rev. SI-00 pg 15-17 of 46

A. Correct answer.

B. Incorrect since the CRD pump doesn't have a trip for low discharge pressure.

C. Incorrect since the CRD pump should have tripped on low suction pressure. The LOCA pump trip is bypassed when taking the RSP switch to Emergency and not the low suction pressure trip.

D. Incorrect since the CRD pump should have tripped on low suction pressure. This trip is not affected by the RSP switch being placed in Emergency.

82. 295023AK1.03 001

The refueling process (i.e. core offload/reload sequence, moving one component at a time, SRO supervising all core alterations, etc.) is designed to prevent an inadvertent criticality.

Which ONE of the following is used as a backup to the refueling process to prevent an inadvertent criticality?

A. Secondary Containment is OPERABLE.

B. Standby Liquid Control is OPERABLE.

C. Refueling Interlocks.

D. Mode Switch locked in REFUEL.

References: LT-LP-04502 Rev. 03, pg. 9 of 57.

A. Incorrect since this does not prevent inadvertent criticality but protects site personnel and public from exposure from an accident.

B. Incorrect since SBLC does not prevent inadvertent criticality but it can take care of it once it happens.

C. Correct answer.

D. Incorrect since the Mode Switch in this position will allow a control rod to be withdrawn.

RO Tier:	T1G3	SRO Tier:	T1G1
Keyword:	REFUELING	Cog Level:	MEM 3.7/4.0
Source:	N	Exam:	HT02301
Test:	C	Misc:	

QUESTIONS REPORT
for HT2002

1. 295023AK1.03 001

The refueling process (i.e. core offload/reload sequence, moving one component at a time, SRO supervising all core alterations, etc.) is designed to prevent an inadvertent criticality. What is used as a backup to the refueling process to prevent an inadvertent criticality?

A. Secondary Containment is OPERABLE.

B. Standby Liquid Control is OPERABLE.

C. Refueling Interlocks.

D. Mode Switch locked in REFUEL.

References: LT-LP-04502 Rev. 03, pg. 9 of 57.

A. Incorrect since this does not prevent inadvertent criticality but protects site personnel and public from exposure from an accident.

B. Incorrect since SBLC does not prevent inadvertent criticality but it can take care of it once it happens.

C. Correct answer.

D. Incorrect since the Mode Switch in this position will allow a control rod to be withdrawn.

4. All refueling interlocks are tested and found to be operable.

5. Startup Range Monitors (SRMs) are functionally tested and shorting links removed (Unit 2 only).

6. The jumper log is reviewed to ensure any jumper(s) inhibiting RPS or RMCS are removed.

7. All control rods capable of being inserted are fully inserted.

8. The reactor must have been shutdown for greater than 24 hours.

   NOTE: This is to allow time for the short-lived fission products to decay, which minimizes the radiological consequences of a fuel handling accident.

9. A SRO, with no other duties, must be on the refueling floor and supervise all core alterations.

I. If at anytime during refueling a prerequisite can not be met, refueling must be stopped, any repairs done, and any retest(s) must be performed before refueling can continue.

EO 01

NOTE: Before stopping refueling operations any component being moved must be placed in a safe condition.

Stress the fact that refueling interlocks help prevent inadvertent criticality.

J. The refueling process is designed to prevent an inadvertent criticality. The refueling interlocks act as a backup to the procedures to ensure no inadvertent criticality occurs during refueling operations.

83. 295024EA1.04 002

Unit 2 has experienced a LOCA with the following conditions present:

Reactor is Shutdown	
Reactor water level	-100"
Reactor pressure	550 psig
Drywell pressure	12 psig
Drywell temperature	265°F
Torus pressure	11.5 psig

The Shift Supervisor has ordered initiation of Drywell Sprays.

In accordance with *34SO-E11-010-2S, Residual Heat Removal System*, which ONE of the following is the MINIMUM drywell spray flow rate required to ensure an effective drywell pressure reduction?

A. 700 gpm.

B. 5000 gpm.

C. 7700 gpm.

D. 17000 gpm.

References: PC-1 Primary Containment Control
Procedure 34SO-E11-010-2S Rev. 30.3 pg 71 and 72 of 238

A. Incorrect since this is the value for Torus spray flow.

B. Correct answer.

C. Incorrect since this is the flow rate to maintain ≤ if using one pump for drywell spray.

D. Incorrect since this is the maximum flow rate for the loop.

RO Tier:	T1G1	SRO Tier:	T1G1
Keyword:	DRYWELL SPRAY	Cog Level:	MEM 3.4/3.8
Source:	N	Exam:	HT02301
Test:	C	Misc:	

QUESTIONS REPORT
for HT2002

1. 295024EA1.04 002

Unit 2 has experienced a LOCA with the following conditions present:

Reactor is Shutdown	
Reactor water level	-100"
Reactor pressure	550 psig
Drywell pressure	13 psig
Drywell temperature	265 F
Torus pressure	12.5 psig

The Shift Supervisor has ordered initiation of Drywell Sprays. CHOOSE the minimum drywell spray flow rate required to ensure an effective drywell pressure reduction?

A. 700 gpm.

B. 5000 gpm.

C. 7700 gpm.

D. 17000 gpm.

References: PC-1 Primary Containment Control
Procedure 34SO-E11-010-2S Rev. 30.3 pg 71 and 72 of 238

A. Incorrect since this is the value for Torus spray flow.

B. Correct answer.

C. Incorrect since this is the flow rate to maintain ≤ if using one pump for drywell spray.

D. Incorrect since this is the maximum flow rate for the loop.

CAUTION

IF POSSIBLE, USE SEPARATE LOOPS OF RHR WHEN DRYWELL SPRAY AND TORUS SPRAY ARE REQUIRED CONCURRENTLY. FOR ADDITIONAL EXPLANATION REFER TO RHR SYSTEM GENERAL INFORMATION ATTACHMENT IN THIS PROCEDURE.

7.4.6.4 While performing the following, CONFIRM CLOSED OR THROTTLE 2E11-F017A(B) AND/OR 2E11-F024A(B) to maintain loop flow:

≤ 7700 GPM with one pump running.

OR

≤ 17,000 GPM with two pumps running.

OR

≤ 11,500 GPM with Hx in service.

7.4.6.4.1 IF Torus Spray is required:

NOTES

- Spraying the Torus may cause a temporary rise in Torus water temperature due to Torus air temperature being warmer than Torus water temperature.
- Torus Spray flow rate is 700 GPM

7.4.6.4.1.1 OPEN 2E11-F028A(B), Torus Spray OR Test Vlv.

7.4.6.4.1.2 Throttle OPEN 2E11-F027A(B), Torus Spray Vlv.

7.4.6.4.2 IF Drywell Spray is required:

NOTES

- Drywell Spray flow rate is 12,500 GPM with both pumps in an RHR loop in service.
- Drywell Spray flow rate must be at least 5000 GPM to ensure an effective drywell pressure reduction (reference EOP/ SAG Appendix "C" calculations).

7.4.6.4.2.1 OPEN 2E11-F021A(B), Cnmt Spray Inbd Vlv.

7.4.6.4.2.2 Throttle OPEN 2E11-F016A(B), Cnmt Spray Outbd Vlv.

7.4.6.5 PLACE the RHR Heat Exchanger in operation by performing the following:

7.4.6.5.1 Confirm OR place RHR Service Water in operation in accordance with the RHR Service Water Startup subsection of this procedure.

7.4.6.5.2 Confirm OR reduce RHR flow to less than OR equal to 11,500 GPM.

7.4.6.5.3 Confirm CLOSED OR CLOSE 2E11-F048A(B), Hx Bypass Vlv.

7.4.6.6 WHEN Containment Spray mode is no longer required, perform the following:

7.4.6.6.1 Confirm CLOSED OR CLOSE the following valves:

- 2E11-F016A(B), Cnmt Spray Outbd Vlv
- 2E11-F021A(B), Cnmt Spray Inbd Vlv
- 2E11-F027A(B), Torus Spray Vlv

7.4.6.6.2 IF Suppression Pool Cooling is NOT in operation, confirm CLOSED OR CLOSE 2E11-F028A(B), Torus Spray OR Test Vlv.

7.4.6.6.3 Return the RHR loop to the desired mode of operation.

34SO-E21-001-2S
RHR for high water levels per
34SO-E11-010-2S

WAIT UNTIL
torus water level
CANNOT be maintained
between 146 in. and 150 in.

torus water level
below 146 in. or above 150 in.

ABOVE 150

RRENTLY

torus water level
10 in. per 34SO-E21-001-2S or
PS-087-2S

WAIT UNTIL
torus water level
CANNOT be maintained
above 110 in.

lp and prevent operation of HPCI
espective of adequate core cooling

rating
ler level
per

RRENTLY

torus water level
5 in. per 3 11-010-2S or
PS-087

torus water level
CANNOT be maintained
below 215 in.

te drywell sprays
AND
te injection into RPV from sources
l to primary containment EXCEPT
s required for:
adequate core cooling
boron injection
CRD

WAIT UNTIL
torus water level
CANNOT be maintained
below 300 in.

ine primary containment water level
O-EOP-105-2S

below 100°F using available
torus cooling per 34SO-E11-010-2S

WAIT UNTIL
torus water temperature
CANNOT be maintained
below 100°F

5

Operate ALL available torus cooling
per 34SO-E11-010-2S EXCEPT RHR pumps
required for adequate core cooling by
continuous operation in LPCI mode

BEFORE
torus water temperature reaches BIIT
curve limit (Graph 5)

PERFORM CONCURRENTLY
RC[A] point A

WAIT UNTIL
torus water temperature
AND
reactor pressure
CANNOT be maintained below
Heat Capacity Temperature Limit
(Graph 2)

EMERGENCY DEPRESS IS REQUIRED

1

Monitor and control drywell temperature
below 150°F using:
- Drywell cooling fans per
34SO-T47-001-2S
- Drywell chillers per 34SO-P64-001-2S

WAIT UNTIL
drywell temperature
CANNOT be maintained
below 150°F

NOTE 7
Refer to 34AB-B21-002-2S
for water level corrections

Operate ALL available drywell cooling using:
- Drywell cooling fans per
34SO-T47-001-2S
- Drywell chillers per 34SO-P64-001-2S

If necessary defeat isolation interlocks per
31EO-EOP-100-2S

WHILE PERFORMING THE FOLLOWING

IF	THEN
primary containment water level and torus pressure CANNOT be maintained below Primary Containment Pressure Limit (Graph 13)	terminate sprays from sources external to the primary containment

7

WHILE PERFORMING THE FOLLOWING

IF	THEN
drywell sprays have been initiated AND BEFORE drywell pressure drops to 0 psig	terminate drywell sprays

BEFORE
drywell temperature reaches 340°F (Bulk)

PERFORM CONCURRENTLY
RC[A] point A

3

IF torus water level is below 215 in.
AND
drywell temperature and pressure are
within the Drywell Spray Initiation Limit
(Graph 8)

THEN trip recirc pumps and
drywell cooling fans
AND
initiate drywell sprays per
34SO-E11-010-2S EXCEPT RHR
pumps required for adequate
core cooling by continuous
injection in LPCI mode

NOTE 9
Drywell spray flow limits:
- 17,000 gpm per loop
- 11,500 gpm through
the heat exchanger

NOTE 10
If DW sprays are throttled
closed, and an increase
in DW pressure occurs,
then DW sprays must be
considered secured.
Conditions for initiating
DW sprays must be met
to resume DW sprays

WAIT UNTIL
drywell temperature
CANNOT be maintained below
340°F (Bulk)

1

Monitor and control containment pressure
below 1.85 psig using:
- containment pressure control systems
per 34SO-T48-002-2S
- SBGT per 34SO-T46-001-2S

WAIT UNTIL
primary containment pressure
CANNOT be maintained
below 1.85 psig

WHILE PERFORMING THE FOLLOWING

IF	THEN
primary containment water level and torus pressure CANNOT be maintained below Primary Containment Pressure Limit (Graph 13)	terminate sprays from sources external to the primary containment

7

WHILE PERFORMING THE FOLLOWING

IF	THEN
torus sprays have been initiated AND BEFORE torus pressure drops to 0 psig	terminate torus sprays

NOTE 3
Torus pressure is indicated on the following:
- 2T48-PI-R632A (P657)
- 2T48-PI-R632B (P654)
- 2T48-PR-R608 (P657)
- 2T48-PR-R609 (P650)

BEFORE
torus pressure reaches 11 psig

3

IF torus water level is below 285 in.

THEN Initiate torus sprays per
34SO-E11-010-2S EXCEPT RHR
pumps required for adequate
core cooling by continuous
injection in LPCI mode

7

WHILE PERFORMING THE FOLLOWING

IF	THEN
drywell sprays have been initiated AND BEFORE drywell pressure drops to 0 psig	terminate drywell sprays

WAIT UNTIL
torus pressure
is above 11 psig

3

IF torus water level is below 215 in.
AND
drywell temperature and pressure are
within the Drywell Spray Initiation Limit
(Graph 8)

THEN trip recirc pumps and
drywell cooling fans
AND
initiate drywell sprays per
34SO-E11-010-2S EXCEPT RHR
pumps required for adequate
core cooling by continuous
injection in LPCI mode

NOTE 9
Drywell spray flow limits:
- 17,000 gpm per loop
- 11,500 gpm through
the heat exchanger

NOTE 10
If DW sprays are throttled
closed, and an increase
in DW pressure occurs,
then DW sprays must be
considered secured.
Conditions for initiating
DW sprays must be met
to resume DW sprays

WAIT UNTIL
torus pressure
CANNOT be maintained
below Pressure Suppression Pressure
(Graph 7)

EMERGENCY DEPRESS IS REQUIRED

BEFORE
torus pressure reaches
Primary Containment Pressure Limit
(Graph 13)

WHILE PERFORMING THE FOLLOWING

IF	THEN
torus is being vented AND more rapid depressurization of the primary containment is required to control containment pressure	perform the following:

GO TO point U
on this sheet

Is
torus water level
below 300 in.

NO

YES

Vent torus per 31EO-EOP-101-2S
irrespective of offsite radiological release rate
if necessary, defeat isolation interlocks

U

NO

Is
torus
being vented

84. 295025EA1.07 001

Unit 2 is operating at 100% RTP. A turbine trip causes a reactor scram but not all of the turbine Bypass valves open on rising pressure. RPV pressure increases to 1190 psig and reactor water level drops to -32" and is currently increasing.

Which ONE of the following statements correctly describes the response of the Alternate Rod Insertion (ARI) system?

A. ARI WILL automatically initiate due to Rx Low Water Level.

B. ARI WILL NOT automatically initiate until RPV water level decreases further.

C. ARI WILL automatically initiate due to high RPV pressure.

D. ARI WILL NOT automatically initiate until RPV pressure increases further.

References: SI-LP-00101 Rev. SI-00, pg 21 - 24 of 46.
EO 010.024.1.02

A. Incorrect since the low reactor water level setpoint of -35" has not been reached.

B. Incorrect since the high reactor pressure actuation setpoint has already been reached (1170 psig).

C. Correct answer.

D. Incorrect since ARI should have already initiated on high pressure (1170 psig).

RO Tier:	T1G1	SRO Tier:	T1G1
Keyword:	ARI	Cog Level:	MEM 4.1/4.1
Source:	B	Exam:	HT02301
Test:	C	Misc:	

QUESTIONS REPORT
for HT2002

1. 295025EA1.07 001

Unit 2 is operating at 100% RTP. A turbine trip causes a reactor scram but not all of the turbine Bypass valves open on rising pressure. RPV pressure increases to 1190 psig and reactor water level drops to -32" and is currently increasing. DETERMINE which of the following statements correctly describes the response of the Alternate Rod Insertion (ARI) system:

A. ARI WILL automatically initiate due to Rx Low Water Level.

B. ARI WILL NOT automatically initiate until RPV water level decreases further.

C. ARI WILL automatically initiate due to high RPV pressure.

D. ARI WILL NOT automatically initiate unless Drywell pressure exceeds 1.85 psig.

References: SI-LP-00101 Rev. SI-00, pg 21 - 24 of 46.
EO 010.024.1.02

A. Incorrect since the low reactor water level setpoint of -35" has not been reached.

B. Incorrect since the high reactor pressure actuation setpoint has already been reached (1170 psig).

C. Correct answer.

D. Incorrect since drywell pressure is not a signal that will actuate ARI.

C. Alternate Rod Insertion System (ARI)

The Alternate Rod Insertion (ARI) System is provided to reduce the probability of occurrence of an Anticipated Transient Without Scram (ATWS) event. It provides the necessary signals to respond to an ATWS event and can also be manually initiated. The system depressurizes the Scram Pilot Valve Air Header through valves that are different from the RPS scram valves, providing a parallel path for initiating control rod insertion.

1. Components

Solenoid Valves block the Scram Air Header supply and also vent the Scram Pilot Valve Air Header on an ARI initiation signal. By venting the air header the control rods will fully insert within 30 seconds.

a. One 3-way 125VDC Solenoid ARI Valve C11-F228 is installed in the Scram Air Header to block the air supply and depressurize the air header upon initiation of ARI (located near the backup scram valves).

b. Two 2-way 125VDC Solenoid ARI Valves C11-F229A and C11-F229B are installed. One at the end of each branch of the Scram Pilot Valve Air Header at the point farthest from the 3-way ARI Valve.

c. One 2-way 125VDC Solenoid ARI Valve C11-F230 is installed on the portion of the Scram Pilot Valve Air Header that supplies air to the vent and drain valves on the scram discharge piping.

2. Controls

Manual operation of the ARI is performed from the main control room at H11-P603. Six pushbutton switches have been installed to perform the following:

a. Control Room H11-P603

1) ARI MANUAL INITIATION - Two pushbuttons with rotating collars. The collars are rotated to arm the ARI system. Both pushbuttons are depressed simultaneously to open the ARI Solenoid Valves.

2) ARI RESET - One pushbutton which closes the ARI Valves (after 30 sec TD if the initiation signals have cleared).

3) ARI ANNUNCIATOR ACKNOWLEDGE - One pushbutton to acknowledge alarms.

4) ARI ANNUNCIATOR RESET - One pushbutton to reset ARI alarms.

5) ARI ANNUNCIATOR TEST - One pushbutton to test the ARI alarms.

3. Indication/Alarms

The status of the ARI system is indicated **Locally** and in the **Main Control** Room on H11-P603.

a. **Local Panel Indication C11-P001 (112' elevation in the Control Building)**

1) VALVE POSITION

- A Red lamp is illuminated for each valve, when the associated ARI Valve is open.
- A Green lamp is illuminated for each valve, when the associated ARI Valve is closed.

2) ARI MANUAL INITIATION IN ARMED POSITION - Illuminates when the switch collars of both ARI pushbuttons are rotated to the armed position.

3) ARI MANUAL INITIATION - An indication lamp illuminates when <u>both</u> ARI pushbuttons are depressed <u>and both</u> switch collars are in the ARMED position.

4) ARI READY TO RESET - A Lamp illuminates 30 sec after an initiation signal is received to indicate that ARI has had sufficient time to perform its function and may be reset if the initiation signals are clear.

5) ARI POWER AVAILABLE -Illuminates when both logic channels have power available.

6) ARI SOV TEST - when the system is placed in TEST, the amber light above the test switch illuminates. Above the amber light are four (4) clear lights, one for each ARI valve. If the test switch is in TEST and the ARI logic has been actuated, the four (4) clear lights will illuminate. While in test, the ARI valves will not open for any reason, and if the valves are already open, they will close. In other words, the system is bypassed.

7) ARI INITIATED - Illuminates when the ARI system is initiated by pressure signals (RPV Pressure 1170 psig), level signals (RWL -35 inches), or manually.

8) HIGH DOME PRESSURE/LOW WATER LEVEL TEST - Lamps illuminate when one contact in one ARI channel is closed (when more than one contact is closed, there is insufficient voltage to illuminate the neon lamps).

b. **Main Control Indicating lamps on H11-P603:**

1) ARI READY TO RESET -Illuminates after 30 seconds following an initiation signal. This light must be illuminated and the initiation signal cleared before ARI can be reset. This time delay, prior to allowing ARI to be reset, is to insure enough time is allowed for closing of the SDV Vent and Drain Valves and for all Control Rods to fully insert.

2) ARI MANUAL INITIATION -Illuminates when both ARI collars are ARMED and both switches are depressed.

3) ARI POWER AVAILABLE -Illuminates when both logic channels have power available.

4) ARI SYSTEM TEST - Illuminates when the system test switch is in TEST position.

FIG 10, 11

4. System Initiations

a. Automatic Initiations

All automatic system initiation signals are supplied from the ATTS system. The parameters monitored and setpoints are:

- Rx High Pressure 1170 psig
  - Channel 1 is B21-N642A & B
  - Channel 2 is B21-N643A & B
- Rx Low Water Level -35 inches
  - Channel 1 is B21-N692A & B
  - Channel 2 is B21-N692C & D

Both RWL or both Rx Pressure relays in Ch 1 or 2 must actuate to initiate ARI.

ARI will not automatically initiate on loss of power.

b. Manual Initiation

To Manually initiate ARI both collars on the Manual Initiation Pushbuttons (S1A/S1B) must be rotated fully clockwise and both pushbuttons must be depressed simultaneously with control power available.

Note: If the TEST switch on panel C11-P001 is in the TEST POSITION, ARI valves will NOT open even with an actuation signal present.

5. Power Supplies

Power for the system is supplied from: 125VDC switchgear 2R25-S004 (1R25-S005). The ARI Annunciator Panel is powered from 1R25-S078 (Control Room lighting cabinet).

Question # LT-LP-010024-0001 **Objective:** 010.024.A.02

Media # LT-LP-00101-03

Unit 2 is operating at 100% rated. A turbine trip causes a reactor scram and RPV pressure increases to 1190 psig. DETERMINE which of the following statements correctly describes the response of the Alternate Rod Insertion (ARI) system:
(CHOOSE ONE)

a. ARI WILL automatically initiate due to high RPV pressure.

b. ARI WILL NOT automatically initiate until RPV water level decreases.

c. ARI WILL automatically initiate directly from the turbine trip.

d. ARI WILL NOT automatically initiate unless Drywell pressure exceeds 1.85 psig.

Answer: a. (1.00 pt)

1. 295026EK2.04 001

Unit 1 is in Mode 1 with the quarterly HPCI Pump Operability Surveillance in progress. The Suppression Pool average temperature is 102°F. The following signals are being sent to SPDS:

Group 1 signals: 4 out of 5 are operable and reading 102°F.
Group 2 signals: 5 out of 5 are operable and reading 103°F.
Group 3 signals: 4 out of 5 are operable and reading 102°F.

Which ONE of the following conditions describes the SPDS indication?

A. Green box with the average temp indicated since average temp is <105°F.

B. Yellow box with the average temp indicated since all groups have a signal.

C. Yellow box with no temp indicated since all signals are not operable.

D.* Red box with the average temp indicated since average temp is >100°F.

Reference: LT-LP-05601 Rev. 03 Safety Parameter Display System
EO 056.002.c.03

A. Incorrect because the average temp must be <100°F to be green.

B. Incorrect because there are 2 or more imputs to each group and temp is > 100°F so the box should be red.

C. Incorrect because there are 2 or more imputs to each group and temp is > 100°F so the box should be red.

D. Correct answer since average temp > 100°F and there are 2 or more inputs to each group.

*Need to verify that the red and green indications also show a value.

RO Tier:	T1G2	SRO Tier:	T1G1
Keyword:	SPDS	Cog Level:	C/A 2.5/2.8
Source:	N	Exam:	HT02301
Test:	C	Misc:	

25. 295026EK2.04 001

Unit 1 is in Mode 1 with the quarterly HPCI Pump Operability Surveillance in progress. The Suppression Pool average temperature is 102°F. The following signals are being sent to SPDS:

Group 1 signals: ~~2~~ 4 out of 5 are operable and reading 102°F.
Group 2 signals: 5 out of 5 are operable and reading 103°F.
Group 3 signals: 4 out of 5 are operable and reading 102°F.

Which ONE of the following conditions describes the SPDS indication?

A. Green box with the average temp indicated since average temp is <105°F.

B. Yellow box with the average temp indicated since all groups have a signal.

C. Yellow box with no temp indicated since all signals are not operable.

D.* Red box with the average temp indicated since average temp is >100°F.

Reference: LT-LP-05601 Rev. 03 Safety Parameter Display System
EO 056.002.c.03

A. Incorrect because the average temp must be <100°F to be green.

B. Incorrect because there are 2 or more imputs to each group and temp is > 100°F so the box should be red.

C. Incorrect because there are 2 or more imputs to each group and temp is > 100°F so the box should be red.

D. Correct answer since average temp > 100°F and there are 2 or more inputs to each group.

*Need to verify that the red and green indications also show a value.

RO Tier:	T1G2	SRO Tier:	T1G1
Keyword:	SPDS	Cog Level:	C/A 2.5/2.8
Source:	N	Exam:	HT02301
Test:	C	Misc:	

86. 295026EK2.04 001

Unit 1 is in Mode 1 with the quarterly HPCI Flow Rate surveillance in progress. The Suppression Pool average temperature is 102°F. The following signals are being sent to SPDS:

Group 1 signals: 2 out of 5 are operable and reading 102°F.
Group 2 signals: 5 out of 5 are operable and reading 103°F.
Group 3 signals: 4 out of 5 are operable and reading 102°F.

Which ONE of the following conditions describes the SPDS indication?

A. Green box with the average temp indicated since average temp is <105°F.

B. Yellow box with the average temp indicated since all groups have a signal.

C. Yellow box with no temp indicated since all signals are not operable.

D.* Red box with the average temp indicated since average temp is >100°F.

Reference: LT-LP-05601 Rev. 03 Safety Parameter Display System
EO 056.002.c.03

A. Incorrect because the average temp must be <100°F to be green.

B. Incorrect because there are 2 or more imputs to each group and temp is > 100°F so the box should be red.

C. Incorrect because there are 2 or more imputs to each group and temp is > 100°F so the box should be red.

D. Correct answer since average temp > 100°F and there are 2 or more inputs to each group.

*Need to verify that the red and green indications also show a value.

RO Tier:	T1G2	SRO Tier:	T1G1
Keyword:	SPDS	Cog Level:	C/A 2.5/2.8
Source:	N	Exam:	HT02301
Test:	C	Misc:	

54. 295026EK2.04 001

Unit 1 is in Mode 1 with the quarterly HPCI Flow Rate surveillance in progress. The Suppression Pool average temperature is 102 F. The following signals are being sent to SPDS:

Group 1 signals: 2 out of 5 are operable and reading 102 F.
Group 2 signals: 5 out of 5 are operable and reading 103 F.
Group 3 signals: 4 out of 5 are operable and reading 102 F.

Which one of the following conditions describes the SPDS indication?

A. Green box with the average temp indicated since average temp is <105 F.

B. Yellow box with the average temp indicated since all groups have a signal.

C. Yellow box with no temp indicated since all signals are not operable.

D. Red box with the average temp indicated since average temp is >100 F.

Reference: LT-LP-05601 Rev. 03 Safety Parameter Display System
EO 056.002.c.03

A. Incorrect because the average temp must be <100 F to be green.

B. Incorrect because there are 2 or more imputs to each group and temp is > 100 F so the box should be red.

C. Incorrect because there are 2 or more imputs to each group and temp is > 100 F so the box should be red.

D. Correct answer since average temp > 100 F and there are 2 or more inputs to each group.

*Need to verify that the red and green indications also show a value.

5. Given a list of statements, IDENTIFY the statement which best describes the significance of the colors green, orange, red, yellow, and white as they pertain to the following: (056.002.c.03)

   a. Parameter field and status indicator box for

      1. SRV
      2. ADS
      3. LLSL
      4. Analog Parameters

   b. Containment Isolation Status (PCIS)
   c. Valve Position
   d. SRM Detection Status

6. Given SPDS indications, ANALYZE the indications and DETERMINE if an instrument has failed. (056.002.c.01)

7. Given a list of statements, IDENTIFY the statement which best describes the significance of the following Primary Display Messages: (056.002.c.02)

   a. "SCRAM"

      1. Orange
      2. Red

   b. "ALL RODS IN"

   c. "HOT LEGS MAY BOIL"

   d. "MAY MISS TRIP"

8. Given a display or drawing of an SPDS "Trend", ANALYZE the display and DETERMINE the following: (056.002.c.05)

   a. The parameter trend (-, +, or constant).
   b. The approximate rate of change of the parameter.

9. Given a display or drawing of an SPDS "Emergency" Display, ANALYZE the drawing and DETERMINE if the allowable limit for the display has been exceeded. (056.002.c.04)

TABLE 1
SPDS PARAMETER DISPLAYS

Torus water temperature	50 to 250°F (11) 0 to 500°F (4) (15 signals are divided into 3 groups)	Torus water Temp Avg = $\frac{\text{N009s Avg + N003s Avg}}{2}$	Green - 2 or more signals available in each group average temp less than 100°F Yellow/value - 2 groups have at least one signal avail, but all groups do not have 2 or more signals available Yellow/blank - no signals avail. Red - average temp greater than 100°F
Main Stack radiation	Normal: 10^{-1} to 10^{6} cps(2) Wide: 5E-3 to 1 E-5 µci/cc(1)	Average of signals if on narrow range	Green - not in wide range and narrow range signals avail difference not OOR Yellow/value - no wide range narrow range signal not avail or difference between narrow range signal OOR Yellow/blank - not wide range and both narrow range signals not available or if in wide range and wide range signals not available Red - wide range signal indicated.
Rx Building Ventilation Radiation	Narrow: 10^{1} to 10^{6}cpm(2)	Average of signals if on narrow range	Same as Main Stack Radiation

QUESTIONS REPORT
for HT2002

1. 295028EK1.02 001

Which ONE of the following is the basis for initiating drywell sprays before the bulk drywell temperature reaches the drywell design temperature limit?

A. To prevent increased degredation of structural concrete and release of hydrogen to the drywell.

B. To maintain the equipment qualification of the drywell valves above the 185' elevation, capable of removing the full decay heat load following a LOCA.

C. To ensure that equipment within the drywell will operate when required.

D. To ensure that the capacity of the suppression chamber - drywell vacuum breakers is not exceeded.

Reference: LR-LP-20310-05, p. 59
99 exam question #15 (answers reordered)

A. Incorrect since elevated Drywell temperature has no effect release of Hydrogen to the containment.

B. Incorrect since initiating drywell sprays has no effect on equipment qualification.

C. Correct answer.

D. Incorrect since drywell temperature does not affect the capacity of the suppression chamber to drywell vacuum breakers.

RO Tier:	T1G2	SRO Tier:	T1G2
Keyword:	DRYWELL SPRAY	Cog Level:	MEM 2.9/3.1
Source:	B	Exam:	HT02301
Test:	C	Misc:	

55. 295028EK1.02 001

Which one of the following is the basis for initiating drywell sprays before the bulk drywell temperature reaches the drywell design temperature limit?

A. To prevent increased degredation of structural concrete and release of hydrogen to the drywell.

B. To maintain the equipment qualification of the drywell valves above the 185' elevation, capable of removing the full decay heat load following a LOCA.

C. To ensure that equipment within the drywell will operate when required.

D. To ensure that the capacity of the suppression chamber - drywell vacuum breakers is not exceeded.

Reference: LR-LP-20310-05, p. 59
99 exam question #15 (answers reordered)
Reference: LR-LP-20310-05, p. 59
99 exam question #15 (answers reordered)

WHILE PERFORMING THE FOLLOWING	
IF primary containment water level and torus pressure CANNOT be maintained below Primary Containment Pressure Limit	**THEN** terminate sprays from sources external to the primary containment

See PC/P explaination

The explanation for this override is the same as previously discussed in the PC/P path.

WHILE PERFORMING THE FOLLOWING	
IF drywell sprays have been initiated **AND** BEFORE drywell pressure drops to 0 psig	**THEN** terminate drywell sprays

See PC/P explaination

The explanation for this override is the same as previously discussed in the PC/P path.

BEFORE
drywell temperature reaches 340°F (bulk)

EO 56

The drywell design temperature is 340°F and temperature must be reduced or the RPV depressurizied prior to reaching this value. Above 340°F, equipment within the drywell may fail to operate if required.

ASK the class: What actions must be taken before drywell temperature exceeds 340°F.

- The drywell design temperature is the "bulk" or average temperature of the drywell air space, not the highest temperature in the containment.

88. 295029EK1.01 001

In accordance with *PC-1 PRIMARY CONTAINMENT CONTROL*, drywell sprays cannot be initiated unless torus level is below 215 inches.

Which ONE of the following describes the reason for this restriction?

A. The suppression pool-to-reactor building vacuum breaker connections are submerged preventing their operation if needed.

B. The drywell-to-suppression pool vacuum breakers are submerged which may cause the containment differential pressure capability to be exceeded.

C. The suppression pool-to-reactor building vacuum breaker connections are submerged and containment integrity would be lost when they open.

D. The drywell-to-suppression pool vacuum breakers are submerged allowing suppression pool water to be siphoned into the drywell.

References: LR-LP-20310 Rev. 05, pg. 31 of 96
EO 201.072.a.27, 201.073.a.06, 201.075.b.15, 201.076.a.14

A. Incorrect since 215" is concerned with covering the drywell-to-suppression pool vacuum breakers.

B. Correct answer.

C. Incorrect since 215" is concerned with covering the drywell-to-suppression pool vacuum breakers.

D. Incorrect since covering the vacuum breakers would not result in siphoning water to the drywell.

RO Tier:	T1G2	SRO Tier:	T1G2
Keyword:	SUPPRESSION POOL	Cog Level:	MEM 3.4/3.7
Source:	B	Exam:	HT02301
Test:	C	Misc:	

QUESTIONS REPORT
for HT2002

1. 295029EK1.01 001

SELECT the statement that best describes the reason drywell sprays are NOT allowed to be initiated if suppression pool level is greater than 215 inches.

A. The suppression pool-to-reactor building vacuum breaker connections are submerged preventing their operation if needed.

B. ✓ The drywell-to-suppression pool vacuum breakers are submerged which may cause the containment differential pressure capability to be exceeded.

C. The suppression pool-to-reactor building vacuum breaker connections are submerged and containment integrity would be lost when they open.

D. The drywell-to-suppression pool vacuum breakers are submerged allowing suppression pool water to be siphoned into the drywell.

References: LR-LP-20310 Rev. 05, pg. 31 of 96
EO 201.072.a.27, 201.073.a.06, 201.075.b.15, 201.076.a.14

A. Incorrect since 215" is concerned with covering the drywell-to-suppression pool vacuum breakers.

B. Correct answer.

C. Incorrect since 215" is concerned with covering the drywell-to-suppression pool vacuum breakers.

D. Incorrect since covering the vacuum breakers would not result in siphoning water to the drywell.

At this point the operator is taking actions to lower Torus water level with RHR using the normal drain path or the alternate path per 34GO-OPS-087-2S. Actions are also being taken in the path concerned with the SRVTPLL which may have included entering the RC[A] flowchart and scramming the reactor.

EO 24

If actions being taken to lower Torus water level are not effective in reversing the upward trend toward 215" or, if 215" is reached, **THE CONDITION OF THIS WAIT UNTIL STEP IS MET** and the operator proceeds to the next step in the flow path.

Terminate drywell sprays **AND** Terminate injection into RPV from sources external to primary containment EXCEPT systems required for: o adequate core cooling o boron injection o CRD

If torus water level cannot be maintained below 215 inches, operation of drywell sprays is terminated. This is done because the operation of the drywell to torus vacuum breakers cannot be assured when level reaches 215 inches.

EO 25
Discuss the reasons for terminating injection from external source if SP/L is above 215 inches.

- 215 inches assures that no portion of the drywell side of a vacuum breaker is submerged. Spray operation with vacuum breakers inoperable (*i.e., with no drywell vacuum relief capability*) may cause the containment differential pressure capability to be exceeded and, therefore, is not permitted.

Injection into the RPV from sources external to the primary containment is terminated to prevent any further increase in torus water level.

Question # LT-LP-201073-0002 **Objective:** 201.073.A.06

Media # LR-LP-20310-04

SELECT the statement that best describes the reason drywell sprays are NOT allowed to be initiated if suppression pool level is greater than 215 inches.

a. The suppression pool-reactor building vacuum breaker connections are submerged preventing their operation if needed.

b. The suppression pool-reactor building vacuum breaker connections are submerged and containment integrity would be lost when they open.

c. The drywell-suppression pool vacuum breakers are submerged preventing the return of non-condensables to the drywell.

d. The drywell-suppression pool vacuum breakers are submerged allowing suppression pool water to be siphoned into the drywell.

Answer: C. (1.0 pt)

90. 295030EK3.03 001

Per the EOP's HPCI is required to be tripped on lowering Torus level but RCIC is allowed to continue to operate if necessary.

Which ONE of the following describes why RCIC operation with lowering Torus level is acceptable?

A. The exhaust flow rate of RCIC is approximately equal to decay heat and a low Torus level will cause RCIC to trip on low suction pressure.

B. Elevated Torus pressure will cause RCIC to trip much sooner than HPCI and Emergency Depressurization is required before the exhaust line is uncovered.

C. Low Torus level will cause RCIC to trip on low suction pressure and Emergency Depressurization is required before the exhaust line is uncovered.

D. Elevated Torus pressure will cause RCIC to trip much sooner than HPCI and the exhaust flow rate of RCIC is approximately equal to decay heat.

References: LR-LP-20310 Rev. 05, pg. 23 of 96

A. Incorrect since low torus level will not affect RCIC suction trip since it is set at 10" Hg vacuum.

B. Incorrect since Emergency Depressurization is not required before RCIC exhaust line is uncovered.

C. Incorrect since low torus level will not affect RCIC suction trip since it is set at 10" Hg vacuum and Emergency Depressurization is not required before RCIC exhaust line is uncovered.

D. Correct answer.

RO Tier:	T1G2	SRO Tier:	T1G1
Keyword:	TORUS LEVEL	Cog Level:	MEM 3.6/3.7
Source:	N	Exam:	HT02301
Test:	C	Misc:	

QUESTIONS REPORT
for HT2002

1. 295030EK3.03 001

Per the EOP's HPCI is required to be tripped on low Torus level but RCIC is not addressed. Select the statement below that supports RCIC operation with low Torus level.

A. The exhaust flow rate of RCIC is approximately equal to decay heat and a low Torus level will cause RCIC to trip on low suction pressure.

B. Elevated Torus pressure will cause RCIC to trip much sooner than HPCI and Emergency Depressurization is required before the exhaust line is uncovered.

C. Low Torus level will cause RCIC to trip on low suction pressure and Emergency Depressurization is required before the exhaust line is uncovered.

D. Elevated Torus pressure will cause RCIC to trip much sooner than HPCI and the exhaust flow rate of RCIC is approximately equal to decay heat.

References: LR-LP-20310 Rev. 05, pg. 23 of 96

A. Incorrect since low torus level will not affect RCIC suction trip since it is set at 10" Hg vacuum.

B. Incorrect since Emergency Depressurization is not required before RCIC exhaust line is uncovered.

C. Incorrect since low torus level will not affect RCIC suction trip since it is set at 10" Hg vacuum and Emergency Depressurization is not required before RCIC exhaust line is uncovered.

D. Correct answer.

WAIT UNTIL

torus water level
CANNOT be maintained
above 110 in.

EO 13

If level decreases < 110 inches, the torus air space will be directly pressurized with HPCI running.

The torus level needs to be maintained above the discharge of the HPCI steam turbine exhaust line to ensure adequate steam condensing. This precludes possible primary containment failure due to over pressurization caused by HPCI steam exhaust discharging directly into the torus air space.

EO 14

HPCI is secured and prevented from operating (PTL) even if needed to maintain RWL

The determination that the torus level cannot be maintained above 110 inches **CAN BE MADE BEFORE** reaching the actual limit based on trend or other plant conditions. As soon as this determination is made, the operator proceeds to the next step and secures HPCI.

Trip and prevent operation of HPCI irrespective of adequate core cooling

Operation of the HPCI System with its exhaust discharge line (located at 110 in.) not submerged will directly pressurize the torus air space.

HPCI Aux Oil Pump is placed in PTL.

HPCI operation is therefore secured, *and prevented from restarting*, to preclude the occurrence of this condition.

ASK Why must HPCI be tripped at 110" "?

The consequences of not doing so may extend to failure of the primary containment from over pressurization, and thus HPCI must be secured irrespective of adequate core cooling concerns.

No instruction regarding RCIC operation is included in this step (or in an equivalent step) for two reasons:

ASK Why is RCIC operation is allowed ?

1. The exhaust flow rate of RCIC is approximately equal to that of decay heat, and is thus consistent with the basis used for determining the Primary Containment Pressure Limit.

HPCI exhaust press trip approx 140 psig where as RCIC is about 40 psig.

2. Elevated torus pressure will cause the RCIC turbine to trip much sooner than the HPCI turbine.

92. 295032EK3.03 001

The SC-SECONDARY CONTAINMENT CONTROL EOP requires Emergency Depressurization if 2 or more areas exceed the Maximum Safe Operating Temperature and a primary system is discharging reactor coolant into secondary containment.

Which ONE of the following statements explain the reason for this action?

A. The rise in secondary containment parameters indicate a wide-spread problem which may pose an indirect but immediate threat to secondary containment integrity or continued safe operation of the plant.

B. The rise in secondary containment parameters indicate substantial degredation of the primary system and may lead to fuel failure if the leaks are not isolated.

C. The rise in secondary containment parameters indicate a wide-spread problem which may pose a direct and immediate threat to secondary containment integrity or equipment located in secondary containment.

D. The rise in secondary containment parameters indicate substantial degredation of the primary system and emergency depressurization places the plant in the safest condition as quickly as possible.

References: LR-LP-20325 Rev. 05, pg 19 and 20 of 40
EO 201.077.a.14, 201.078.a.15, 201.079.a.19

A. Incorrect since condition pose a DIRECT threat to containment, not an INDIRECT threat.

B. Incorrect since this condition does not indicate substantial primary system degredation.

C. Correct answer.

D. Incorrect since this condition does not indicate substantial primary system degredation.

RO Tier:	T1G3	SRO Tier:	T1G2
Keyword:	SECONDARY CONTAIN	Cog Level:	MEM 3.5/3.8
Source:	N	Exam:	HT02301
Test:	C	Misc:	

1. 295032EK3.03 001

SC-SECONDARY CONTAINMENT CONTROL requires Emergency Depressurization if 2 or more areas exceed the Maximum Safe Operating Temperature and a primary system is discharging reactor coolant into secondary containment. SELECT the statement that explains the reason for this action.

A. The rise in secondary containment parameters indicate a wide-spread problem which may pose an indirect but immediate threat to secondary containment integrity or continued safe operation of the plant.

B. The rise in secondary containment parameters indicate substantial degredation of the primary system and may lead to fuel failure if the leaks are not isolated.

C. The rise in secondary containment parameters indicate a wide-spread problem which may pose a direct and immediate threat to secondary containment integrity or equipment located in secondary containment.

D. The rise in secondary containment parameters indicate substantial degredation of the primary system and emergency depressurization places the plant in the safest condition as quickly as possible.

References: LR-LP-20325 Rev. 05, pg 19 and 20 of 40
EO 201.077.a.14, 201.078.a.15, 201.079.a.19

A. Incorrect since condition pose a DIRECT threat to containment, not an INDIRECT threat.

B. Incorrect since this condition does not indicate substantial primary system degredation.

C. Correct answer.

D. Incorrect since this condition does not indicate substantial primary system degredation.

EO 20

The operator is directed to enter either EOP RC or RCA at point A which will:

EO 21

Discuss reason for performing RC[A] before reaching Max Safe Operating Values.

- Provide direction to insert a manual reactor scram , and
- Assure control of RWL, pressure, and power.

Scramming the reactor:

Point out that this step applies to SC/T, SC/L, and SC/R.

- Reduces, to decay heat levels, the energy that the RPV may be discharging to the secondary containment.
- Since the RPV is the only significant source of heat, other than a fire, that might cause area temperatures to get this high, this action should stop, or significantly slow, the area temperature rise.

This action is needed at this time because if a Maximum Safe Operating Value is reached, adequate core cooling, containment integrity, safety of personnel, or continued operation of equipment required to perform EPG actions can no longer be assured.

WAIT UNTIL
Area ambient or differential temperature is above Maximum Safe Operating Temperature in more than one area (Table 4)

Define Max Safe Operating Temperature.

The Max Safe Operating Temperature is defined as the highest temperature at which safe shutdown equipment will not fail NOR will personnel access required for safe shutdown be precluded.

Discuss bases of Max Safe Operating Temperature.

- The Max Safe Operating Temperatures are based on Georgia Power analysis for equipment qualification in high temperature environments.

Discuss bases of Max Safe Operating Temperature.

The Max Safe Operating Radiation Level is defined as the highest radiation level at which safe shutdown equipment will not fail NOR will personnel access required for safe shutdown be precluded.

Discuss bases for Max Safe Operating Radiation Level.

- A value of 1000 mR/hr was selected for the Maximum Safe Operating Radiation Level because it is easy to read and is the current Plant Hatch annual limit.

Define Max Safe Operating Water Level.

The Max Safe Operating Water Level is defined as the highest water level at which safe shutdown equipment will not fail NOR will personnel access required for safe shutdown be precluded.

Discuss bases for Max Safe Operating Water Level.

- The Max Safe Operating Water Level is based on the point at which safety related or vital equipment just starts to become covered with water. This is determined by actual field measurements.

MNO water level is inside the sump

NOTE: The Max Normal Operating Water Level is based on the water level inside the instrument or drain sumps and is identified by annunciators.

MSO water level is water on the floor

NOTE: The Max Safe Operating Level is actual water level in inches above the room floor and is measured by a installed ruler in the room.

Point out that this step applies to SC/T, SC/L and SC/R.

The criteria of "more than one area" specified in this step identifies the rise in secondary containment parameters as a wide-spread problem which may pose a direct and immediate threat to:

Discuss the reasons for Emergency Depressurization when more than one area is exceeding the Max Safe Operating Value.

- Secondary containment integrity, or
- Equipment located in the secondary containment, or
- Continued safe operation of the plant.

Point out the division of Areas on Tables 4, 5 & 6.

This reasoning applies to all three secondary parameters: Temperature, Area Water level, and Radiation level

Point out that exceeding a Max Safe Operating Parameter Value in one area and different Max Safe Operating parameter in another area does not satisfy the WAIT UNTIL statement.

One parameter (e.g., temperature) above its maximum safe operating value in one area and a different parameter (e.g., radiation or water level) above its maximum safe operating value in the same area or different area **is not a condition which requires emergency depressurization.**

D

IF a secondary containment radiation condition does NOT exist

THEN operate the following:
- Refuel Floor HVAC per 34SO-T41-006-2S
- Reactor Building HVAC per 34SO-T41-005-2S

WAIT UNTIL

area ambient or differential temperature is above Maximum Normal Operating Temperature (Table 4)

Isolate ALL systems discharging into area EXCEPT systems required to:
- assure adequate core cooling
- shut down reactor
- suppress fire
- vent primary containment irrespective of offsite release rates

PERFORM CONCURRENTLY

WAIT UNTIL

primary system is discharging reactor coolant into secondary containment (Table 7)

WAIT UNTIL

area ambient or differential temperature is above Maximum Safe Operating Temperature in more than one area (Table 4)

Shut down reactor per 34GO-OPS-013-2S or 34GO-OPS-014-2S

E

BEFORE

ANY area ambient or differential temperature reaches Maximum Safe Operating Temperature (Table 4)

PERFORM CONCURRENTLY RC(A) point A

WAIT UNTIL

area ambient or differential temperature is above Maximum Safe Operating Temperature in more than one area (Table 4)

EMERGENCY DEPRESS IS REQUIRED

F

19. Given a system discharging into secondary containment and 31EO-EOP-014-2S, "SC Secondary Containment Control," DETERMINE if that system is a primary system discharging reactor coolant. (201.077.A.13, 201.078.A.14, 201.079.A.14)

20. Given secondary containment area temperatures approaching Maximum Safe Operating Values and access to the EOPs, EVALUATE plant conditions and ENTER 31EO-EOP-010(011)-2S, "RC(A) RPV Control" at Point A before any secondary containment area temperature reaches its Maximum Safe Operating Value. (201.077.A.11, 201.078.A.12, 201.079.A.12)

21. Given a list, IDENTIFY the statement that describes the reason for entering RC(A) RPV Control if secondary containment parameters are approaching their Maximum Safe Operating Values and a primary system is discharging reactor coolant into secondary containment. (201.077.A.10, 201.078.A.11, 201.079.A.11)

22. Given the following parameters and 31EO-EOP-014-2S, "SC Secondary Containment Control," DETERMINE if any area parameters are above their Maximum Safe Operating Values.

    a. Area radiation levels. (201.077.A.09)
    b. Area water levels. (201.078.A.10)
    c. Area or differential temperatures. (201.079.A.10)

23. Given a list, IDENTIFY the statement that describes the two reasons for emergency depressurizing the RPV when directed to do so by the Secondary Containment Control EOP. (201.077.A.14, 201.078.A.15, 201.079.A.19)

24. Given a list, IDENTIFY the statement that describes the purpose of restarting Turbine Building HVAC during attempts to control offsite radioactivity release rates above the Alert Level. (201.082.A.01)

25. Given plant conditions with a primary system discharging reactor coolant outside primary and secondary containment, EVALUATE plant conditions and DETERMINE if the system discharging is needed for any of the following purposes: (201.082.A.05)

    a. Systems assuring adequate core cooling.
    b. Systems required to shutdown the reactor.
    c. Systems used to vent the primary containment irrespective of offsite release rates.

26. Given a list, RECOGNIZE the individual reason(s) for allowing any of the following primary systems to continue to discharge reactor coolant outside primary and secondary containment even though offsite radioactivity release rates are above the Alert Level: (201.082.A.04)

    a. Systems assuring adequate core cooling.
    b. Systems required to shutdown the reactor.
    c. Systems used to vent the primary containment irrespective of offsite release rates.

96. 295036EA1.02 001

The following conditions exist on Unit 2:

-Sump alarms in the Control Room indicate a leak in the Southwest Diagonal Area of the Reactor Building.
-The plant operator reports water level is 15" above 87' elevation and increasing.
-The source of the leak has been identified as a fire protection pipe in the room.
-No increase in area temperature or radiation has been noted.
-No other emergency condition exists at this time.

In accordance with SC-SECONDARY CONTAINMENT CONTROL EOP, which ONE of the following actions is appropriate?
(Provide copy of SC-SECONDARY CONTAINMENT CONTROL EOP)

A. Shutdown the reactor per the Fast Shutdown procedure.

B. Install a submersible pump to lower level; do not isolate the fire system.

C. Declare the affected systems INOPERABLE and enter appropriate Tech Spec.

D. Isolate the fire system header discharging into the area.

References: SC - Secondary Containment Control

A. Incorrect since the reactor isn't required to be shutdown until area water level in more than one area is above max safe.

B. Incorrect since the system discharging into the affected area must be isolated with some exceptions. These exceptions are not met.

C. Incorrect since the systems are not required to be declared INOPERABLE just because the area water level is above max normal.

D. Correct answer since level cannot be restored to normal with the leak in progress.

RO Tier:	T1G3	SRO Tier:	T1G2
Keyword:	FLOOD CONTROL	Cog Level:	C/A 3.5/3.6
Source:	B	Exam:	HT02301
Test:	C	Misc:	TCK

10. 295036EA1.02 001

The following conditions exist on Unit 2:

-Sump alarms in the Control Room indicate a leak in the Southwest Diagonal Area of the Reactor Building.
-The plant operator reports water level is 15" above 87' elevation and increasing.
-The source of the leak has been identified as a fire protection pipe in the room.
-No increase in area temperature or radiation has been noted.
-No other emergency condition exists at this time.

In accordance with SC-SECONDARY CONTAINMENT CONTROL EOP which ONE of the following actions is appropriate?

A. Shutdown the reactor per the Fast Shutdown procedure.

B. Install a submersible pump to lower level; do not isolate the fire system.

C. Declare the affected systems INOPERABLE and enter appropriate Tech Spec.

D. Isolate the fire system header discharging into the area.

References: SC - Secondary Containment Control

A. Incorrect since the reactor isn't required to be shutdown until area water level in more than one area is above max safe.

B. Incorrect since the system discharging into the affected area must be isolated with some exceptions. These exceptions are not met.

C. Incorrect since the systems are not required to be declared INOPERABLE just because the area water level is above max normal.

D. Correct answer since level cannot be restored to normal with the leak in progress.

QUESTIONS REPORT
for HT2002

1. 295036EA1.02 001

The following conditions exist on Unit 2:

-Sump alarms in the Control Room indicate a leak in the Southwest Diagonal Area of the Reactor Building.
-The plant operator reports water level is 15" above 87' elevation and increasing.
-The source of the leak has been identified as a fire protection pipe in the room.
-No increase in area temperature or radiation has been noted.
-No other emergency condition exists at this time.

The IMMEDIATE response is to...

A. shutdown the reactor per the Fast Shutdown procedure.

B. install a submersible pump to lower level; do not isolate the fire system.

C. declare the affected systems INOPERABLE and enter appropriate Tech Spec.

D. isolate the fire system header discharging into the area.

References: SC - Secondary Containment Control

A. Incorrect since the reactor isn't required to be shutdown until area water level in more than one area is above max safe.

B. Incorrect since the system discharging into the affected area must be isolated with some exceptions. These exceptions are not met.

C. Incorrect since the systems are not required to be declared INOPERABLE just because the area water level is above max normal.

D. Correct answer since level cannot be restored to normal with the leak in progress.

..295036.EA1.02 | 12/09/1996

Lasalle 1 | R

Print Recor | New Searc | Exit

Given the followin Initial Plant Conditions:
- Sump alarms in the Control Room indicate a leak in the Southwest Corner Room Unit One Reactor Building
- The EA reports that water level is 10 inches above the floor
- The EA has identified the source of the leak as the fire protection pipe to the corner room
- No increase in area temperature or radiation has been noted
- No other emergency condition exists at this time

The IMMEDIATE response is to ...

isolate the header supplying FP to that area.

use a submersible pump to help the sump pumps; do not isolate FP.

standby to Scram the reactor if level reaches Max Safe.

send an operator to the raceway to see if level is high there too.

1 2 3 4 5 7 8 9

SC - SECONDARY CONTAINMENT CONTROL

Area ambient or differential temperature above Table 4 Maximum Normal Operating Temperature

Area or floor drain sump water level above Table 5 Maximum Normal Operating Water Level

Area or HVAC exhaust radiation level above Table 6 Maximum Normal Operating Radiation Level

Differential pressure at or above 0 in. of water

WHILE PERFORMING THE FOLLOWING

IF PRIMARY CONTAINMENT FLOODING IS OR HAS BEEN REQUIRED	THEN exit the EOPs and enter the Severe Accident Guidelines

WHILE PERFORMING THE FOLLOWING

IF ANY Unit 1 or Unit 2 secondary containment HVAC exhaust radiation level exceeds the isolation setpoint (Table 14)	THEN confirm o Unit 1 and Unit 2 Reactor Building HVAC isolation o Unit 1 and Unit 2 Refuel Floor HVAC isolation o Unit 1 and Unit 2 SBGT initiation per 34AB-T22-003-1S
IF Refuel Floor HVAC isolates AND a Unit 1 or Unit 2 secondary containment radiation condition does NOT exist	THEN restart Refuel Floor HVAC per 34SO-T41-006-1S if necessary defeat high drywell pressure AND low RWL isolation interlocks per 31EO-EOP-100-1S
IF Reactor Building HVAC isolates AND a Unit 1 or Unit 2 secondary containment radiation condition does NOT exist	THEN restart Reactor Building HVAC per 34SO-T41-005-1S if necessary defeat high drywell pressure AND low RWL isolation interlocks per 31EO-EOP-100-1S

PERFORM CONCURRENTLY

SC/T

Operate available area coolers in affected areas.

IF a secondary containment radiation condition does NOT exist

THEN operate the following:
- o Refuel Floor HVAC per 34SO-T41-006-1S
- o Reactor Building HVAC per 34SO-T41-005-1S

WAIT UNTIL area ambient or differential temperature is above Maximum Normal Operating Temperature (Table 4)

Isolate ALL systems discharging into area EXCEPT systems required to:
- o assure adequate core cooling
- o shut down reactor
- o suppress fire
- o maintain primary containment integrity

PERFORM CONCURRENTLY

WAIT UNTIL primary system is discharging reactor coolant into secondary containment (Table 7)

WAIT UNTIL area ambient or differential temperature is above Maximum Safe Operating Temperature in more than one area (Table 4)

Shut down reactor per 34GO-OPS-013-1S or 34GO-OPS-014-1S

BEFORE area ambient or differential temperature es Maximum Safe Operating erature (Table 4)

PERFORM CONCURRENTLY RC(A) point A

WAIT UNTIL a ambient or differential temperature is above ximum Safe Operating Temperature in more than one area (Table 4)

RGENC ESS IS REQUIRED

SC/L

WAIT UNTIL ONE of the following is above Maximum Normal Operating Water Level (Table 5):
- o A floor drain sump water level
- o An area water level

Operate available sump pumps to restore and maintain water level below Maximum Normal Operating Water Level (Table 5)

IF ONE of the following CANNOT be restored and maintained below Maximum Normal Operating Water Level (Table 5):
- o ANY floor drain sump water level
- o ANY area water level

THEN isolate ALL systems discharging water into sump or area EXCEPT systems required to:
- o assure adequate core cooling
- o shut down reactor
- o suppress fire
- o maintain primary containment integrity

PERFORM CONCURRENTLY

WAIT UNTIL primary system is discharging reactor coolant into secondary containment (Table 7)

WAIT UNTIL area water level is above Maximum Safe Operating Water Level in more than one area (Table 5)

Shut down reactor per 34GO-OPS-013-1S or 34GO-OPS-014-1S

BEFORE ANY area water level reaches Maximum Safe Operating Water Level (Table 5)

PERFORM CONCURRENTLY RC(A) point A

WAIT UNTIL area water level is above Maximum Safe Operating Water Level in more than one area (Table 5)

EMERGENCY DEPRESS IS REQUIRED

Maximum N

Isolate ALL EXCEPT s
- o assure
- o shut do
- o suppre
- o maintai integrit

PERF

WAIT UNTIL primary system is discharging reactor coolant into secondary containment (Table 7)

BEFORE ANY area radiation level reaches Maximum Safe Operating Radiation Le (Table 6)

PERFORM CONCURRENTLY RC(A) point A

WAIT UNTIL area radiation level is above Maximum Safe Operating Radiation in more than one area (Table 6)

EMERGENCY DEPRESS IS REQU

RR - RADIOACTIVIT

Offsite radio above

WHILE PERFO

IF PRIMARY CONTAINMENT FLOODIN IS OR HAS BEEN REQUIRED

WHILE PERFO

IF Turbine Building HVAC is shuldown

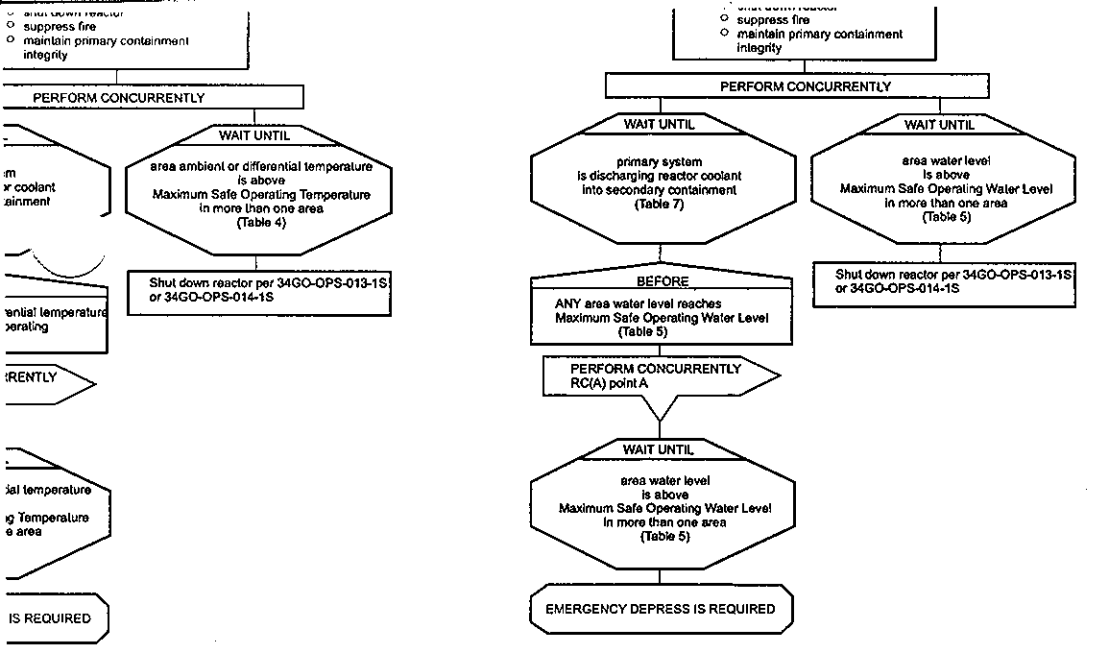

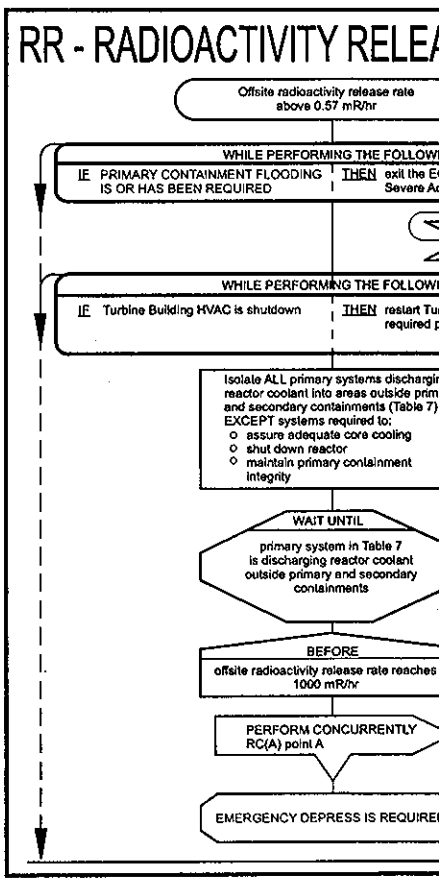

ONTAINMENT
EMPERATURES

B-S1/S71 604	Max Normal Operating Value °F	Max Safe Operating Value °F
(RW		
6A)	150	212.5
	150	212.5
016C)	150	212.5
N016D)	150	212.5
	150	212.5
6F)	150	212.5
AL AREA		
	150	212.5
AL AREA		
	150	212.5
A		
	167.5	245
	167.5	245
	167.5	245
	167.5	310
	167.5	310
	167.5	310
EA		
	167.5	212.5
	167.5	212.5
	167.5	212.5
	167.5	212.5
EL AREA		
	192.5	300
N ROOM		
	150	212.5
	150	212.5

508	Max Normal Operating Value °F	Max Safe Operating Value °F
(RWCU)		
A)	67	98
023B)	67	98
023C)	67	98
D)	67	98
E/N023E)	67	98
F/N023F)	67	98
AL AREA		
A)	40	98
AL AREA		
0B)	40	98
EA		
	42	102
	42	102
	42	102
	42	102
EL AREA		
	60	150

Table 5 SECONDARY CONTAINMENT OPERATING WATER LEVELS

AREA WATER LEVEL ANNUNCIATORS on 1H11-P657	Max Normal Operating Value	Max Safe Operating Value
NORTHWEST DIAGONAL AREA		14 in. above 87' el.
1 RB N-W DIAGONAL FLOOR DRN SUMP LEVEL HIGH (657-033) (1T45-N007)	High	
2 CRD N-W DIAG INSTR SUMP LVL HIGH-HIGH (657-068) (1T45-N005)	High High	
NORTHEAST DIAGONAL AREA		19 in. above 87' el.
3 RB N-E DIAGONAL FLOOR DRN SUMP LEVEL HIGH-HIGH (657-034) (1T45-N006)	High High	
4 RHR-CS N-E DIAG INSTR SUMP LVL HIGH-HIGH (657-035) (1T45-N003B)	High High	
SOUTHWEST DIAGONAL AREA		32 in. above 87' el.
5 RCIC S-W DIAG INSTR SUMP LVL HIGH-HIGH (657-069) (1T45-N004)	High High	
SOUTHEAST DIAGONAL AREA		14 in. above 87' el.
6 RHR-CS S-E DIAG INSTR SUMP LVL HIGH-HIGH (657-070) (1T45-N003A)	High High	
HPCI ROOM AREA		37 in. above 87' el.
7 HPCI ROOM INSTR SUMP LVL HIGH-HIGH (657-071) (1T45-N001)	High High	
TORUS ROOM AREA		9 in. above 87' el.
8 TORUS S-W AREA INSTR SUMP LVL HIGH-HIGH (657-104) (1T45-N002C)	High High	
9 TORUS N-W AREA INSTR SUMP LVL HIGH-HIGH (657-105) (1T45-N002D)	High High	
10 TORUS N-E AREA INSTR SUMP LVL HIGH-HIGH (657-106) (1T45-N002B)	High High	
11 TORUS S-E AREA INSTR SUMP LVL HIGH-HIGH (657-107) (1T45-N002A)	High High	

Table 6 SECONDARY CONTAINMENT OPERATING RADIATION LEVELS

HVAC EXHAUST RADIATION ANNUNCIATORS on 1H11-P601	Max Normal Operating Value mR/hr	Max Safe Operating Value mR/hr
	HI-HI Radiation Annunciator	N/A
- RB BLDG POT CONTAM AREA (1D11-K609 A-D)	18	N/A
- REFUELING FLOOR VENT EXHAUST (1D11-K611 A-D)	18	N/A

AREA RADIATION MONITORS on 1H11-P600, 1D21-P600	Max Normal Operating Value mR/hr	Max Safe Operating Value mR/hr
REFUEL FLOOR AREA		
1 Reactor head laydown area (1D21-K601A)	50	1000
2 Refueling Floor Stairway (1D21-K601B)	50	1000
3 Refueling Floor (1D21-K601D)	50	1000
4 Drywell Shield Plug (1D21-K601E)	50	1000
5 Spent Fuel Pool & New Fuel Storage (1D21-K601M)	50	1000
203' ELEVATION AREA		
6 RB 203' Working Area (1D21-K601X)	50	1000
185' ELEVATION AREA		
7 Spent Fuel Pool Demin. Equip (1D21-K601C)	150	1000
8 Fuel Pool Demin. Panel (1D21-K617)	50	100
158' ELEVATION AREA		
9 RB 158' Working Area (1D21-K601K)	50	1000
10 Rx Wtr Sample Rack Area (1D21-K601L)	50	1000
130' ELEVATION NORTH AREA		
11 TIP Area (1D21-K601F)	50	1000
12 North CRD HCU (1D21-K601P)	50	1000
13 TIP Probe Drives Area (1D21-K601U)	100	1000
130' ELEVATION EAST AREA		
14 RB 130 N-E Working Area (1D21-K601G)	50	1000
15 Equipment Access Airlock (1D21-K601S)	50	1000
130' ELEVATION SOUTH AREA		
16 RB 130' N-E Working Area (1D21-K601H)	50	1000
17 South CRD HCU (1D21-K601N)	50	1000
SOUTHWEST DIAGONAL AREA		
18 RCIC Equip S-W Diagonal (1D21-K601V)	50	1000
NORTHWEST DIAGONAL AREA		
19 CRD Pump N-W Diagonal (1D21-K601W)	50	1000
NORTHEAST DIAGONAL AREA		
20 CS & RHR N-E diagonal (1D21-K601Y)	50	1000
SOUTHEAST DIAGONAL AREA		
21 CS & RHR S-E Diagonal (1D21-K601R)	50	1000
130' ELEVATION AREA (SOUTHWEST)		
22 HPCI Turbine Area (1D21-K601T)	150	1000

Table 7 PRIMARY SYSTEMS

Primary system discharging into area is defined as REACTOR COOLANT leak from:

- CRD
- Core Spray
- Feedwater
- HPCI
- Main steam
- Main steam drains
- RCIC
- Reactor sampling
- RWCU
- RHR
- SBLC

A system is considered a "primary system" if lowering reacto pressure would reduce the leak rate from the unisolated syst

Table 14 SECONDARY CONTAINMENT HVAC EXHAUST RADIATION ISOLATION SETPOI

HVAC EXHAUST RADIATION ANNUNCIATORS on 1(2)H11-P601	Isola Setp mR/
- UNIT 1 RX BLDG POT CONTAM AREA (1D11-K609A-D)	18
- UNIT 1 REFUELING FLOOR VENT EXHAUST (1D11-K611A-D)	18
- UNIT 2 RX BLDG POT CONTAM AREA (2D11-K609A-D)	9.5
- UNIT 2 REFUELING FLOOR VENT EXHAUST (2D11-K611A-D)	15
- UNIT 2 REFUELING FLOOR VENT EXHAUST (2D11-K634A-D)	6.9
- UNIT 2 REFUELING FLOOR VENT EXHAUST (2D11-K635A-D)	5.7

2 3 4 5 6 7 8 9 10

97. 295037EK2.05 001

Unit 2 has scrammed due to low reactor water level. Multiple control rods did not insert and the ATWS procedure is being directed by the Shift Supervisor. The Shift Supervisor has ordered the RO to insert control rods by increasing CRD cooling water differential pressure (dp).

Which ONE of the following describes how this action causes control rods to insert?

A. Increased cooling water dp puts additional pressure on the underside of the CRDM drive pistons.

B. Increased cooling water dp puts additional pressure on the top of the CRDM drive pistons.

C. Increased cooling water dp causes driving flow to increase.

D. Increased cooling water dp causes driving flow to decrease.

Reference: LR-LP-20314 Rev. 03 pg 13
EO 001.034.a.01

A. Correct answer.

B. Incorrect. Additional pressure is placed on the underside of the drive piston.

C. Incorrect answer. Increasing cooling water Dp has no effect on drive flow.

D. Incorrect answer. Increasing cooling water Dp has no effect on drive flow.

RO Tier:	T1G1	SRO Tier:	T1G1
Keyword:	CRD	Cog Level:	MEM 4.0/4.1
Source:	N	Exam:	HT02301
Test:	C	Misc:	

60. 295037EK2.05 001

Unit 2 has scrammed due to low reactor water level. Multiple control rods did not insert and the ATWS procedure is being directed by the Shift Supervisor. The Shift Supervisor has ordered the RO to insert control rods by increasing CRD cooling water dp. How does this action cause control rods to insert?

A.✓ Increased cooling water dp puts additional pressure on the underside of the CRDM drive pistons.

B. Increased cooling water dp puts additional pressure on the top of the CRDM drive pistons.

C. Increased cooling water dp causes driving flow to increase.

D. Increased cooling water dp causes driving flow to decrease.

Reference: LR-LP-20314 Rev. 03 pg 13
EO 001.034.a.01

A. Correct answer.

B. Incorrect. Additional pressure is placed on the underside of the drive piston.

C. Incorrect answer. Increasing cooling water Dp has no effect on drive flow.

D. Incorrect answer. Increasing cooling water Dp has no effect on drive flow.

98. 295037EK3.02 001

An ATWS has occurred on Unit 2 and RCIC is being used to inject boron. The RCIC Minimum Flow Valve F019, has been closed and system flow has been verified to be greater than 122.5 gpm. The Minimum Flow Valve's breaker was then opened to prevent operation of the valve.

Which ONE of the following describes the reason that the Minimum Flow Valve was disabled?

A. Ensure that the RCIC pump does not go to run out if the Minimum Flow Valve stuck in the open position.

B.✓ Ensure that all boron flow is to the Vessel and not to the Suppression Pool.

C. Ensure that all boron flow is to the Vessel an not to the CST.

D. Ensure that the RCIC pump has the proper amount of cooling flow.

References: LR-LP-20320 Rev. 05, pg. 22 of 28.
SI-LP-03901 Rev. 00, Figure 1
EO 039.019.a.11, 039.020.a.07

Changed answer D to relate to pump minimum flow requirements.

A. Incorrect since RCIC minimum flow valve would still operate at the appropriate setpoints.

B. Correct answer.

C. Incorrect since the minimum flow valve goes back to the Torus.

D. Incorrect since the amount of flow is what protects the pump from overheating and not whether the minimum flow valve is deactivated.

RO Tier:	T1G1	SRO Tier:	T1G1
Keyword:	SBLC/RCIC	Cog Level:	MEM 3.6/3.9
Source:	B	Exam:	HT02301
Test:	C	Misc:	

QUESTIONS REPORT
for HT2002

1. 295037EK3.02 001

An ATWS has occurred on Unit 2 and RCIC is being used to inject boron. The RCIC Minimum Flow Valve has been closed and system flow has been verified to be greater than 122.5 gpm. The Minimum Flow Valve's breaker was then opened to prevent operation of the valve. SELECT the reason that the Minimum Flow Valve was disabled.

A. Ensure that the RCIC pump does not go to run out if the Minimum Flow Valve stuck in the open position.

B. Ensure that all boron flow is to the Vessel and not to the Suppression Pool.

C. Ensure that all boron flow is to the Vessel an not to the CST.

D. Ensure that the RCIC pump has the proper amount of cooling flow.

References: LR-LP-20320 Rev. 05, pg. 22 of 28.
SI-LP-03901 Rev. 00, Figure 1
EO 039.019.a.11, 039.020.a.07

Changed answer D to relate to pump minimum flow requirements.

A. Incorrect since RCIC minimum flow valve would still operate at the appropriate setpoints.

B. Correct answer.

C. Incorrect since the minimum flow valve goes back to the Torus.

D. Incorrect since the amount of flow is what protects the pump from overheating and not whether the minimum flow valve is deactivated.

EO 18

Discuss the reasons for opening the Min. Flow Valve breaker.

- The min flow valve is closed and secured to prevent the possibility of diverting some of the injection flow to the Suppression Pool. If this was not done neither the Hot or Cold Shutdown Boron Weight could be assured by using SBLC tank level or the number of RWCU Precoat tank mixtures.

EO 19
Explain why there is a flow requirement for disabling Min. Flow Valve.

NOTE: RCIC System must be injecting to vessel with more than 122.5 gpm flow to allow proper cooling of the RCIC pump before disabling the Min Flow Valve. The min flow valve is closed and prevented from operating by opening the breaker supplying power to it. Therefore the operators must monitor pump discharge flow to ensure proper cooling of the pump.

6. Open Supp Pool Suction Outboard Test Connection, 2E51-F032 and RCIC Pump Suction Test Connection PX-N054 Isolation, 2E51-F3000.

Discuss caution concerning RCIC cavitation.

CAUTION
If RCIC Pump Suction Valve is throttled to obtain a positive pressure from the RWCU Precoat Tank. RCIC Pump operation must be monitored closely to avoid cavitation.

As the suction valve is throttled back to obtain a positive pressure from the RWCU Precoat Tank, the operators should be aware that they are also reducing the available head available to the pump.

Discuss the RCIC Continuous Recheck statement.

7. Throttle closed the following valve if flow from the boron source is not observed:

   2E51-F010 CST Suction Vlv

8. Open SBLC Storage Tank heater breakers when tank level drops below 20%.

9. Close Supp Pool Suction Outboard Test Connection, 2E51-F032 and RCIC Pump Suction Test Connection PX-N054 Isolation, 2E51-F3000, before the boron source is empty.

13. Given 31EO-EOP-109-2S, "Alternate Boron Injection", and drawings of the HPCI and RWCU precoat systems, IDENTIFY the flow path used to inject boron with HPCI from the RWCU precoat tank. (005.018.A.03)

*14. Given a list, IDENTIFY the statement that describes the purpose of closing and deactivating the HPCI minimum flow valve when using HPCI for boron injection. (005.018.A.11 and 005.019.A.07)

15. Given 31EO-EOP-109-2S, "Alternate Boron Injection", and HPCI lined up for boron injection, DETERMINE if HPCI flow rate is high enough to provide adequate pump cooling. (005.018.A.10 and 005.019.A.06)

16. Given 31EO-EOP-109-2S, "Alternate Boron Injection", and drawings of the RCIC and SBLC systems, IDENTIFY the flow path used to inject boron with RCIC from the SBLC enclosure area. (039.020.A.03)

17. Given 31EO-EOP-109-2S, "Alternate Boron Injection", and drawings of the RCIC and RWCU precoat systems, IDENTIFY the flow path used to inject boron with RCIC from the RWCU precoat tank. (039.019.A.03)

*18. Given a list, IDENTIFY the statement that describes the purpose of closing and deactivating the RCIC minimum flow valve when using RCIC for boron injection. (039.019.A.11 and 039.020.A.07)

19. Given 31EO-EOP-109-2S, "Alternate Boron Injection", and RCIC lined up for boron injection, DETERMINE if RCIC flow rate is high enough to provide adequate pump cooling. (039.019.A.10 and 039.020.A.06)

*20. Given 31EO-EOP-109-2S, "Alternate Boron Injection", IDENTIFY the two possible sources of make up water to the SBLC storage tank. (001.028.B.02, 005.019.B.02 and 039.020.B.02)

21. Given 31EO-EOP-109-2S, "Alternate Boron Injection', IDENTIFY the SBLC storage tank temperature at which additional boron can be added to the tank. (001.028.B.04, 005.019.B.04 and 039.020.B.04)

*22. Given 31EO-EOP-109-2S, "Alternate Boron Injection", IDENTIFY the statement that describes the purpose of maintaining SBLC storage tank temperature above 100 degrees F during boron addition to the tank. (001.028.B.05, 005.019.B.05 and 039.020.B.05)

*23. Given 31EO-EOP-109-2S, "Alternate Boron Injection", IDENTIFY the statement that describes the purpose of sparging the SBLC storage tank during boron addition to the tank. (001.028.B.06, 005.019.B.06 and 039.020.B.06)

*** Not Selected for Requal**

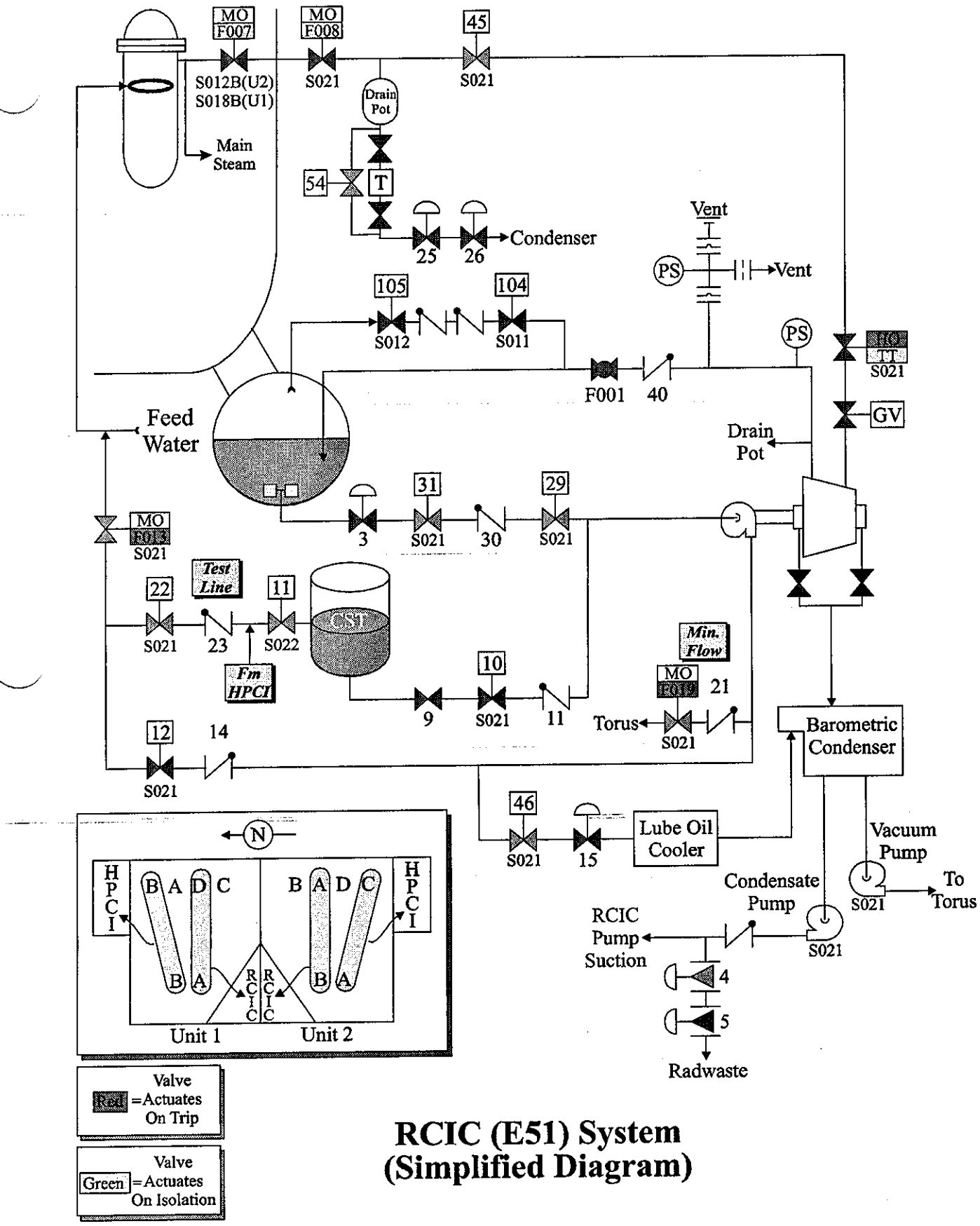

RCIC (E51) System (Simplified Diagram)

SI-03901 Fig 1

Question # LR-LP-039020-0003 **Objective:** 039.020.A.07

Media # LR-LP-20320-04

AN ATWS has occurred on Unit 2 requiring boron injection with the RCIC system. Proper operation of the Minimum Flow Valve was verified when injection rate increased to greater than 122.5 gpm. The Minimum Flow valve's breaker was then opened thus disabling the valve. DETERMINE the purpose of disabling the valve: (CHOOSE ONE.)

a. Ensure that all boron flow to the Vessel and not to the CST.

b. Ensure that all boron flow to the Vessel and not to the Suppression Pool.

c. Keep boron from crystallizing in the Minimum Flow Return line.

d. Ensure that the RCIC pump does not go to run out if the Minimum Flow Valve stuck in the open position.

Answer: b (1.00 pt.)

99. 295038EA2.03 002

Which ONE of the following describes the basis for an offsite radioactivity release rate of 0.57 mr/hr as an entry condition to Radioactive Release Control (RR)?

A. Represents an immediate threat to the continued health and safety of the public.

B. Corresponds to an entry into a Site Area Emergency in the Emergency Plan.

C. Indicates a primary system break which cannot be isolated.

D. Represents a release rate that is higher than expected during normal plant operations but does not pose an immediate threat to the public.

Reference: LR-LP-20325 Rev. 05, pg 26,29
EO 201.082.a.09

A. Incorrect answer. This is a bases for the 1000 mr/hr entry to RCA.

B. Incorrect since .57 corresponds to an alert action level.

C. Incorrect answer. This is a bases for the 1000 mr/hr entry to RCA.

D. Correct answer.

RO Tier:	T1G2	SRO Tier:	T1G1
Keyword:	RELEASE RATE	Cog Level:	MEM 3.5/4.3
Source:	B	Exam:	HT02301
Test:	C	Misc:	

62. 295038EA2.03 002

Which one of the following describes the basis for an offsite radioactivity release rate of 0.57 mr/hr as an entry condition to Radioactive Release Control (RR)?

A. Represents an immediate threat to the continued health and safety of the public.

B. Corresponds to an entry into a Site Area Emergency in the Emergency Plan.

C. Indicates a primary system break which cannot be isolated.

D. Represents a release rate that is higher than expected during normal plant operations but does not pose an immediate threat to the public.

Reference: LR-LP-20325 Rev. 05, pg 26,29
EO 201.082.a.09

A. Incorrect answer. This is a bases for the 1000 mr/hr entry to RCA.

B. Incorrect since .57 corresponds to an alert action level.

C. Incorrect answer. This is a bases for the 1000 mr/hr entry to RCA.

D. Correct answer.

100. 295038EK2.03 001

As a result of maintenance the control room ventilation system is aligned to the Isolation Mode. A subsequent off-site release resulted in the initiation of a Main Control Room air intake high radiation signal.

Which ONE of the following describes the impact the high radiation signal has on the continued operation of the Control Room HVAC System?

A. Since the control room ventilation system is not in the Normal Mode then the Control Room Operator must manually initiate the Pressurization Mode per *34SO-Z41-001-1S, Control Room Ventilation System.*

B. The Control Room Ventilation System will remain in the Isolation Mode until the high radiation signal clears. Then the Control Room Operator must realign the system to the Normal Mode.

C. 1Z41-F016, Outside Air Intake Damper will automatically open along with the filter inlet valves. This will place the Control Room Ventilation System in the Pressurization Mode to protect the Control Room personnel.

D. The Control Room Ventilation System will automatically shift to the Purge Mode. The Control Room Operator must start the exhaust fan and ensure 1Z41-F018A(B), Suction Damper is open.

References: INPO exam bank (Fermi)
34SO-Z41-001-1S Rev. 17 pg 8 - 12 of 33

A. Incorrect since the Control Room HVAC System will automatically shift to the Pressurization Mode upon high inlet radiation levels.

B. Incorrect since the Control Room HVAC System will automatically shift to the Pressurization Mode upon high inlet radiation levels.

C. Correct answer.

D. Incorrect since the Control Room HVAC System will automatically shift to the Pressurization Mode upon high inlet radiation levels.

RO Tier:	T1G2	SRO Tier:	T1G1
Keyword:	CONTROL ROOM HVAC	Cog Level:	C/A 2.9/3.5
Source:	M	Exam:	HT02301
Test:	C	Misc:	

QUESTIONS REPORT
for HT2002

1. 295038EK2.03 001

As a result of maintenance the control room ventilation system is aligned to the Isolation Mode. A subsequent off-site release resulted in the initiation of a Main Control Room air intake high radiation signal. What impact does the offsite release have on the continued operation of the Control Room HVAC System?

A. Since the control room ventilation system is not in the Normal Mode then the Control Room Operator must manually initiate the Pressurization Mode per 34SO-Z41-001-1S, Control Room Ventilation System.

B. The Control Room Ventilation System will remain in the Isolation Mode until the high radiation signal clears. Then the Control Room Operator must realign the system to the Normal Mode.

C. 1Z41-F016, Outside Air Intake Damper will automatically open along with the filter inlet valves. This will place the Control Room Ventilation System in the Pressurization Mode to protect the Control Room personnel.

D. The Control Room Ventilation System will automatically shift to the Purge Mode. The Control Room Operator must start the exhaust fan and ensure 1Z41-F018A(B), Suction Damper is open.

References: INPO exam bank (Fermi)
34SO-Z41-001-1S Rev. 17 pg 8 - 12 of 33

A. Incorrect since the Control Room HVAC System will automatically shift to the Pressurization Mode upon high inlet radiation levels.

B. Incorrect since the Control Room HVAC System will automatically shift to the Pressurization Mode upon high inlet radiation levels.

C. Correct answer.

D. Incorrect since the Control Room HVAC System will automatically shift to the Pressurization Mode upon high inlet radiation levels.

..295038.ek2.03 | 06/14/2001

Fermi 2 2 | R

Print Recor | New Searc | Exit

As a result of an accident, the control center HVAC system automatically realigned to the RECIRCULATION mode. A subsequent off-site release resulted in the initiation of a Hi-Hi radiation signal on both the normal and emergency makeup air intake radiation monitors. The CCHVAC system emergency air intake selector switch is in AUTO. What impact does the offsite release have on the continued operation of CCHVAC?

The emergency air intakes will remain open unless either the north or south emergency air intake radiation levels decrease to below the Hi-Hi trip setpoint.

The emergency air intakes will isolate and await the results of the 5-minute intake radiation monitor sample period.

The CCHVAC system will automatically realign to the PURGE mode in order to reduce the radiation levels at the air intakes.

The CCHVAC system will automatically TRIP stopping the supply fan, supply fan heaters, roll filter motor, return air fan, and electrostatic filter.

7.1.2 Automatic Initiation Of Pressurization Mode

CONTINUOUS

NOTE

The Control Room Ventilation System will switch to the Pressurization Mode on any of the following signals:
1) LOCA from Unit 1 OR 2
2) Refueling floor high radiation from Unit 1 OR 2
3) Main Steam line high flow from Unit 1 OR 2
4) Main Control Room air intake high radiation.

7.1.2.1 On receipt of a pressurization mode initiation signal confirm the following:

7.1.2.1.1 Confirm the Pressurization Mode Trip Ch. A & B lights are ILLUMINATED on panels 1H11-P657 AND 1H11-P654.

7.1.2.1.2 IF the Pressurization Mode Trip Ch A & B lights are NOT ILLUMINATED, THEN manually initiate Pressurization Mode per the Manual Initiation of Pressurization Mode/Isolation Mode subsection of this procedure.

7.1.2.1.3 Confirm the following on panel 1H11-P657:

- 1Z41-F011, Filter Bypass is CLOSED
- 1Z41-F007A, B, & C, AHU Inlets to B003A, B003B & B003C are OPEN
- 1Z41-F014A, Recirc Inlet is OPEN
- 1Z41-C011A, Exh Fan is STOPPED
- 1Z41-F018A, Suction Damper is CLOSED
- 1Z41-F013A, Filter Inlet is OPEN
- 1Z41-C012A, Recirc Fan is RUNNING
- 1Z41-F016, Outside Air Intake Damper, is OPEN

7.1.2.1.4 Confirm the following on panel 1H11-P654:

- 1Z41-F012, Filter Bypass is CLOSED
- 1Z41-F008A, B, & C AHU Inlet to B003A, B003B, & B003C are OPEN
- 1Z41-F014B, Recirc Inlet is OPEN
- 1Z41-F019, Men's Restroom Vent Isol Dmpr is CLOSED
- 1Z41-F020, Women's Restroom Vt Isol Dmpr is CLOSED
- 1Z41-C011B, Exh Fan is STOPPED
- 1Z41-F013B, Filter Inlet is OPEN
- 1Z41-F018B, Suction Damper is CLOSED
- 1Z41-C012B, Recirc Fan is Running

7.1.2.2 Confirm 1Z41-F015, Roll Filter Bypass, is OPEN, at C70, MCR Door.

NOTE

This door must be closed upon initiation of CR Vent. Pressurization Mode IAW 34SO-Z41-001-1S.
Posted C69

7.1.2.3 CLOSE C69, MCR to MCR Annex Door.

NOTE

Do NOT block these doors OPEN IAW 34SO-Z41-001-1S.
Posted C69 & Posted Men's Restroom Door

7.1.2.4 Confirm the Men's Restroom Door is CLOSED.

7.1.2.5 PLACE the control switch for 1Z41-C012B (C012A), Recirc Fan, to the STANDBY position on panel 1H11-P654 (P657).

7.1.2.6 Confirm the following dampers are CLOSED on panel 1H11-P654 (P657):

- 1Z41-F008A, B & C (F007A, B, & C), AHU Inlets to B003A, B003B, & B003C
- 1Z41-F014B (F014A), Recirc Inlet

7.1.3 Manual Initiation Of Pressurization Mode/Isolation Mode

CONTINUOUS

7.1.3.1 IF in the Purge mode, RESTORE normal ventilation per the Purge Mode to Normal ventilation subsection of this procedure.

NOTE

This door must be CLOSED upon initiation of CR Ventilation Pressurization Mode IAW 34SO-Z41-001-1S.

Posted C69

7.1.3.2 CLOSE C69, MCR to MCR Annex Door.

7.1.3.3 IF Pressurization Mode is desired:

7.1.3.3.1 OPEN 1Z41-F015, Roll Filter Bypass, at C70, MCR Door.

7.1.3.3.2 OPEN 1Z41-F013A, Filter Inlet, on panel 1H11-P657.

7.1.3.3.3 OPEN 1Z41-F013B, Filter Inlet, on panel 1H11-P654.

7.1.3.4 IF Isolation Mode is desired:

7.1.3.4.1 CLOSE 1Z41-F015, roll filter bypass, at C70, MCR Door.

7.1.3.4.2 CLOSE 1Z41-F016, Outside Air Intake Damper, panel 1H11-P657.

7.1.3.4.3 CLOSE 1Z41-F013A, Filter Inlet, on panel 1H11-P657.

7.1.3.4.4 CLOSE 1Z41-F013B, Filter Inlet, on panel 1H11-P654.

7.1.3.5 START 1Z41-C012A (C012B), Recirc Fan, AND confirm the following dampers OPEN, on panel 1H11-P657 (P654):

- 1Z41-F007A, B & C (F008A, B & C) Inlets to Units B003A, B003B, AND B003C
- 1Z41-F014A (F014B), Recirc Inlet

7.1.3.6 On panel 1H11-P654:

- CLOSE Filter Bypass, 1Z41-F012
- CLOSE Men's and Women's Restroom Vent Isol Dmprs, 1Z41-F019 & F020.

7.1.3.7 CLOSE 1Z41-F011, Filter Bypass on panel 1H11-P657.

7.1.3.8 Confirm the Men's Restroom Door is CLOSED.

7.1.3.9 PLACE the control switch for 1Z41-C012B (C012A), Recirc Fan, to the STANDBY position, on panel 1H11-P654 (P657).

7.1.3.10 CONFIRM the following dampers are CLOSED on panel 1H11-P654 (P657):

- 1Z41-F008A, B & C (F007A, B, & C) inlets to units B003A, B003B, AND B003C
- 1Z41-F014B (F014A), Recirc Inlet

7.1.4 Purge Mode

CONTINUOUS

NOTE

This procedure is written to purge the Unit 1 Control Room starting from a normal operating configuration. Components in parentheses are for purging the Unit 2 Control Room.

7.1.4.1 Confirm STOPPED OR STOP the following HVAC units:

- 1Z41-B003B
- 1Z41-B003A(C)

7.1.4.2 Confirm the following dampers are CLOSED:

- 1Z41-F009A(C), Recirc Line Isol Damper
- 1Z41-F030A(C), Disch Damper
- 1Z41-F028A, Crosstie B003A to B003B Outlet
- 1Z41-F028B, Crosstie B003C to B003B Outlet
- 1Z41-F010A, Crosstie B003A to B003B Inlet
- 1Z41-F010B, Crosstie B003C to B003B Inlet

7.1.4.3 OPEN 1Z41-F015, Roll Filter Bypass, at C70, MCR Door.

7.1.4.4 OPEN OR confirm OPEN 1Z41-F016, Outside Air Intake Damper.

7.1.4.5 OPEN 1Z41-F017A(B), Inlet Control Vane, at the 180' Elev of the Control Building.

NOTE

PRIOR to operating 1Z41-C011A(B), Control Room HVAC Exhaust Fan, refer to Unit 1 AND Unit 2 Technical Specifications. Operating the fan AND opening 1Z41-F018A(B) suction damper presents a single failure concern regarding isolation of the exhaust duct in the event a pressurization mode actuation occurs.

7.1.4.6 START 1Z41-C011A(B), Exh Fan, AND confirm 1Z41-F018A(B), Suction Damper, OPENS.

102. 400000A4.01 001

Unit 1 is operating at 100% RTP with the following lineup for RBCCW pumps:

"A" RBCCW Pump	Running
"B" RBCCW Pump	Running
"C" RBCCW Pump	Auto not running

Which ONE of the following is the expected plant response from a trip of 4160V Bus 1G assuming no operator action is taken?

A. No change is plant status as the "C" RBCCW pump has lost power but was not running.

B. "A" RBCCW pump trips; "C" RBCCW pump cannot start due to a loss of power; Recirc pump, RWCU NRHX outlet, and CRD pump temperatures increase; Recirc pumps trip due to Recirc M-G set high oil temperatures.

C. "B" RBCCW pump trips; "C" RBCCW pump auto starts at 90 psig system pressure; Recirc pump, RWCU NRHX outlet, CRD pump and Recirc M-G set oil temperatures do not measurably change.

D. "A" AND "B" RBCCW pumps trip; "C" RBCCW pump auto starts at 90 psig; Recirc pump, Recirc M-G set, RWCU NRHX outlet and the running CRD pump temperatures increase; Recirc M-G set and CRD pumps eventually trip on high temperatures.

References: LT-LP-02703-03 Rev. 03 pg 48-49 of 63.
SI-LP-00901-00 Rev SI-00 pg 13 of 25
EO 200.014.a.05

A. Incorrect since the "C" RBCCW pump auto starts to maintain RBCCW system pressure.

B. Incorrect since the "B" RBCCW pump is the one that trips.

C. Correct answer.

D. Incorrect since the loss of the 2G Bus does not affect the "A" RBCCW pump.

RO Tier:	T2G2	SRO Tier:	T2G2
Keyword:	RBCCW	Cog Level:	C/A 3.1/3.0
Source:	B	Exam:	HT02301
Test:	C	Misc:	

64. 400000A4.01 001

Unit 1 is operating at 100% RTP with the following lineup for RBCCW pumps:

"A" RBCCW Pump	Running
"B" RBCCW Pump	Running
"C" RBCCW Pump	Auto not running

SELECT the expected plant response from a trip of 4160V Bus 1G assuming no operator action is taken.

A. No change is plant status as the "C" RBCCW pump has lost power but was not running.

B. "A" RBCCW pump trips; "C" RBCCW pump cannot start due to a loss of power; Recirc pump, RWCU NRHX outlet, and CRD pump temperatures increase; Recirc pumps trip due to Recirc M-G set high oil temperatures.

C. "B" RBCCW pump trips; "C" RBCCW pump auto starts at 90 psig system pressure; Recirc pump, RWCU NRHX outlet, CRD pump and Recirc M-G set oil temperatures do not measurably change.

D. "A" AND "B" RBCCW pumps trip; "C" RBCCW pump auto starts at 90 psig; Recirc pump, Recirc M-G set, RWCU NRHX outlet and the running CRD pump temperatures increase; Recirc M-G set and CRD pumps eventually trip on high temperatures.

References: LT-LP-02703-03 Rev. 03 pg 48-49 of 63.
SI-LP-00901-00 Rev SI-00 pg 13 of 25
EO 200.014.a.05

A. Incorrect since the "C" RBCCW pump auto starts to maintain RBCCW system pressure.

B. Incorrect since the "B" RBCCW pump is the one that trips.

C. Correct answer.

D. Incorrect since the loss of the 2G Bus does not affect the "A" RBCCW pump.

1. 500000EA1.01 001

After a scram on Unit 2, Reactor Water Level decreases to 0" before being restored to the normal band. When a high Drywell temperature is observed the Shift Supervisor enters the Primary Containment flowcharts. The Shift Supervisor directs H_2O_2 Analyzers to be placed in service.

Which ONE of the following is required to start the H_2O_2 Analyzers?

A. No action is required since the H_2O_2 Analyzers should be running due to an automatic start signal.

B. Depress the H_2O_2 analyzer reset pushbuttons on the 2H11-P700 panel.

C. Place the 2P33-S16/S17 LOCA OVERRIDE switches in Bypass on the 2H11-P700 panel.

D. Place the 2P33-S25(B)A mode switches in ANALYZE on the 2P33-P601B(A) panels.

References: 34SO-P33-001

A. Incorrect since the analyzers do not have an auto start signal.

B. Incorrect since the isolation signal is present and it must be bypassed, action would otherwise be correct.

C. Correct answer.

D. Incorrect since the isolation signal is present ain it must be bypassed, otherwise the action would be correct.

RO Tier:	T1G1	SRO Tier:	T1G1
Keyword:	H2 RECOMBINER	Cog Level:	MEM 3.4/3.3
Source:	N	Exam:	HT02301
Test:	C	Misc:	

103. 500000EA1.01 001

Post LOCA Hydrogen Recombiner "B" has automatically shutdown due to blower inlet temperature >220°F.

Which ONE of the following describes the restoration of the Recombiner when the temperature returns below the setpoint?

A. The Recombiner heaters will automatically re-energize however, HS-3 must be taken to OFF then to OPERATE to restart the Recombiner blower. This action will also cycle the heaters.

B. No automatic actions occur. HS-3 must be taken to OFF then to OPERATE to re-start the Recombiner blower and Recombiner heaters.

C. The Recombiner blower will automatically restart however, HS-3 must be taken to OFF then to OPERATE to re-energize the Recombiner heaters. This action will also cycle the blower.

D. The Recombiner blower and Recombiner heaters automatically restart. HS-3 manipulation is not required.

References: LT-LP-04801 Rev. 3 pg 15 of 25
EO 048.002.a.01, 048.002.a.02

A. Incorrect since the blower will automatically re-energize but the heaters do not.

B. Incorrect since the recombiner blower automatically re-starts.

C. Correct answer.

D. Incorrect since the recombiner heaters don't automatically re-start.

RO Tier:	T1G1	SRO Tier:	T1G1
Keyword:	H2 RECOMBINER	Cog Level:	MEM 3.4/3.3
Source:	B	Exam:	HT02301
Test:	C	Misc:	

QUESTIONS REPORT
for HT2002

1. 500000EA1.01 001

Post LOCA Hydrogen Recombiner "B" has automatically shutdown due to blower inlet temperature >220 F. When the temperature goes below the setpoint choose the statement that accurately describes the restoration of that Recombiner.

A. The Recombiner heaters will automatically re-energize BUT, HS-3 must be taken to OFF then to OPERATE to restart the Recombiner blower. This action will also cycle the heaters.

B. No automatic actions occur. HS-3 must be taken to OFF then to OPERATE to re-start the Recombiner blower and Recombiner heaters.

C. The Recombiner blower will automatically restart BUT, HS-3 must be taken to OFF then to OPERATE to re-energize the Recombiner heaters. This action will also cycle the blower.

D. The Recombiner blower and Recombiner heaters automatically restart. HS-3 manipulation is not required.

References: LT-LP-04801 Rev. 3 pg 15 of 25
EO 048.002.a.01, 048.002.a.02

A. Incorrect since the blower will automatically re-energize but the heaters do not.

B. Incorrect since the recombiner blower automatically re-starts.

C. Correct answer.

D. Incorrect since the recombiner heaters don't automatically re-start.

27. 600000AA2.06 001

A fire has been reported outside the Turbine Building which is producing large amounts of smoke. The Fire Brigade has been dispatched and the Brigade Leader reports back that the fire is under control. He also expresses a concern that the Control Room may get smoke drawn into the ventilation.

Per *34AB-X43-001-2S, Fire Procedure*, which ONE of the following describes the action the Control Board Operator (CBO) should take?

A. Place the control room ventilation system in the Purge mode.

B. Maintain the control room ventilation in the normal lineup until the fire is out.

C. Place the control room ventilation system in the isolation mode.

D. Secure control room ventilation until the fire is out and the smoke clears.

References: 34AB-X43-001-2S, Fire Procedure Rev. 10 ED 6, pg 2 of 77.

A. Incorrect since the purge mode will draw in more outside air.

B. Incorrect since this lineup still draws in outside air.

C. Correct answer per step 4.6.

D. Incorrect since the control room ventilation system should not be secured under these circumstances.

RO Tier:	T1G2	SRO Tier:	T1G2
Keyword:	CONTROL ROOM VENTS	Cog Level:	MEM 2.5/2.8
Source:	N	Exam:	HT02301
Test:	C	Misc:	

104. 600000AA2.06 001

A fire has been reported outside the turbine building which is producing large amounts of smoke. The Fire Brigade has been dispatched and the brigade leader reports back that the fire is under control. He also expresses a concern that the Control Room may get smoke drawn into the ventilation.

Per *34AB-X43-001-2S, Fire Procedure*, which ONE of the following describes the action the Control Board Operator (CBO) should take?

A. Place the control room ventilation system in the Purge mode.

B. Maintain the control room ventilation in the normal lineup until the fire is out.

C. Place the control room ventilation system in the isolation/pressurization mode.

D. Secure control room ventilation until the fire is out and the smoke clears.

References: 34AB-X43-001-2S, Fire Procedure Rev. 10 ED 6, pg 2 of 77.

A. Incorrect since the purge mode will draw in more outside air.

B. Incorrect since this lineup still draws in outside air.

C. Correct answer per step 4.6.

D. Incorrect since the control room ventilation system should not be secured under these circumstances.

RO Tier:	T1G2	SRO Tier:	T1G2
Keyword:	CONTROL ROOM VENTS	Cog Level:	MEM 2.5/2.8
Source:	N	Exam:	HT02301
Test:	C	Misc:	

QUESTIONS REPORT
for HT2002

1. 600000AA2.06 001

A fire has been reported outside the turbine building which is producing large amounts of smoke. The Fire Brigade has been dispatched and the brigade leader reports back that the fire is under control. He also expresses a concern that the Control Room may get smoke drawn into the ventilation. Per 34AB-X43-001-2S, Fire Procedure, the Control Board Operator (CBO) should:

A. Place the control room ventilation system in the Purge mode.

B. Maintain the control room ventilation in the normal lineup until the fire is out.

C. Place the control room ventilation system in the isolation/pressurization mode.

D. Secure control room ventilation until the fire is out and the smoke clears.

References: 34AB-X43-001-2S, Fire Procedure Rev. 10 ED 6, pg 2 of 77.

A. Incorrect since the purge mode will draw in more outside air.

B. Incorrect since this lineup still draws in outside air.

C. Correct answer per step 4.6.

D. Incorrect since the control room ventilation system should not be secured under these circumstances.

4.0 SUBSEQUENT OPERATOR ACTIONS

4.1 IF the fire involves an area OR equipment that could affect plant operations, monitor unit/plant parameters AND notify the Shift Superintendent OR Shift Supervisor of any unusual OR abnormal indications.

4.2 IF an Electrical fire exists, DE-ENERGIZE the affected component.

4.3 Evaluate the consequences of the loss of the affected component on the safe operation of the plant.

4.4 IF directed by the Shift Supervisor, enter 34AB-C71-001-2S, Scram Procedure, AND SCRAM the reactor.

4.5 Notify Plant Fire Chief OR alternate per the Emergency Call List to respond to fire scene.

4.6 IF necessary to prevent smoke from entering the Main Control Room, PLACE Control Room ventilation system in Isolation Operation per 34SO-Z41-001-1S, Control Room Air Conditioning System.

4.7 IF the fire occurs inside any building WITHIN the main powerblock, ensure floor drain sump pumps serving the building area affected are in AUTOMATIC.

4.8 IF the fire is in an area that could pose a radiological hazard, direct Health Physics to respond to the fire area.

4.9 Assign an individual to establish AND maintain two-way communications between the Main Control Room AND the Fire Brigade.

4.10 Notify Security of the fire AND its location AND request their immediate response to secure the fire scene.

4.11 Initiate the Emergency Call List.

4.12 Refer to 73EP-EIP-001-0S, Emergency Classification and Initial Actions.

4.13 Monitor fire status AND notify the Shift Superintendent OR Shift Supervisor of changes that might affect plant operation. IF necessary, contact local fire departments for assistance.

4.14 Perform the appropriate succeeding action concurrently with other required Annunciator Response Procedures, System Operating Procedures, Abnormal Operating Procedures, Remote Shutdown Procedures, OR Emergency Operating Procedures.

108. G2.1.29 001

During a valve lineup, an operator needs to check a valve in the throttled position. It is noted that the valve has a locking device installed.

Which ONE of the following describes the actions the operator should perform?

A.✓ Leave the locking device installed and perform a locking device operability check only.

B. Leave the locking device installed, verify mark on stem matches the appropriate position established when the valve was initially positioned.

C. Unlock the valve, turn the handwheel in the closed direction for 1 full turn to verify the valve is throttled, reopen the valve 1 full turn and install the locking device.

D. Unlock the valve, turn the handwheel in the closed direction and count the number of turns until it is seated, reopen the valve to the appropriate position and install the locking device.

References: LT-LP-30004 Rev. 04 pg 36 of 64
EO 300.022.a.06
Modified the question from a locked open valve to a throttled valve.
Question #85 on 1995 SRO exam.

A. Correct answer.

B. Incorrect since there is not a mark on the stem when the valve is initially positioned.

C. Incorrect since the valve should not be operated to verify position.

D. Incorrect since the valve should not be operated to verify position.

RO Tier:	T3	SRO Tier:	T3
Keyword:	VALVE LINEUP	Cog Level:	MEM 3.1/3.2
Source:	M	Exam:	HT02301
Test:	C	Misc:	TCK

QUESTIONS REPORT
for HT2002

1. G2.1.29 001

During a valve lineup, an operator needs to check a valve in the throttled position. It is noted that the valve has a locking device installed.

Which ONE of the following describes the actions the operator should perform?

A.✓ Leave the locking device installed and perform a locking device operability check only.

B. Leave the locking device installed, verify mark on stem matches the appropriate position established when the valve was initially positioned.

C. Unlock the valve, turn the handwheel in the closed direction for 1 full turn to verify the valve is throttled, reopen the valve 1 full turn and install the locking device.

D. Unlock the valve, turn the handwheel in the closed direction and count the number of turns until it is seated, reopen the valve to the appropriate position and install the locking device.

References: LT-LP-30004 Rev. 04 pg 36 of 64
EO 300.022.a.06
Modified the question from a locked open valve to a throttled valve.
Question #85 on 1995 SRO exam.

A. Correct answer.

B. Incorrect since there is not a mark on the stem when the valve is initially positioned.

C. Incorrect since the valve should not be operated to verify position.

D. Incorrect since the valve should not be operated to verify position.

b. Turning hand wheel in the "close" direction for OPEN valves.

- The wheel should be turned no more than one-quarter turn and then returned to the full OPEN position.

c. Motor operated or pneumatic valve position may be verified from remote position indication.

d. For valves required to be throttled, **DO NOT** perform confirmation of position. Perform only Locking Device Operability.

SER 90-021, (C09100113)

*4. Independent verification is performed by a verifier performing the verification after the performer has completed and returned the data sheets to the Shift Supervisor.

a. Independent verification of a lock valve is required upon restoration to the required position.

34GO-SUV-001-0S, Section 5.2.1

b. The Shift Supervisor may waive Independent Verification when significant health/safety hazards (e.g. High Rad, High Temps) are likely to be encountered during performance of Independent Verification.

5. Valve Position and Locking Device Status

a. The initial status of valve positions and locking devices is established by system valve lineups that are performed following an outage.

b. The Shift Supervisor shall:

1) Maintain the status of locked valves.

2) Control changes in valve positions and locking devices.

3) Document each manipulation of locked valves in the Locked Valve Log.

12. Given procedure 30AC-OPS-009-0S, "Control Room Instrumentation," IDENTIFY the approval and signature requirements for a pulled annunciator card on a safety system. (SRO ONLY) (300.030.o.01)

13. Given procedure 31GO-OPS-007-0S, IDENTIFY the information that must be verbally transmitted from a member of the operating staff to his/her relief during a shift change. (300.035.a.01)

14. STATE the items to be reviewed for your appropriate position prior to assuming the shift, as shown in procedure 31GO-OPS-007-0S. (300.035.a.02)

15. STATE who can authorize a locked valve manipulation form per 34GO-SUV-001-0S. (300.021.b.04)

16. Given a scenario involving lock valve manipulation, EVALUATE whether performance was per plant procedure. (300.022.a.06)

17. STATE the purpose of the Locked Valve Log. (300.021.b.01)

18. Given a list of conditions, SELECT the condition (s) that identify a Locked Valve as given in 34GO-SUV-001-0S, "Control and Surveillance of Locked Valves.". (300.022.a.01)

19. LIST the approved methods of confirming valve position for OPEN, CLOSED, and THROTTLED valves as given in 34GO-SUV-001-0S. (300.022.a.02)

20. STATE who can authorize a change of a locked valve's position. (300.021.b.02)

21. STATE the actions that must be performed by personnel who manipulate a locked valve. (300.021.b.03)

22. STATE the actions that must be performed by personnel performing an independent verification. (300.022.a.04)

23. LIST the action that must be performed by personnel upon finding a locked valve mispositioned or a valve-locking device inoperable. (300.022.a.05)

24. LIST the three (3) steps that must be performed to confirm locking device operability. (300.022.a.03)

25. IDENTIFY the minimum required compositions of the Hatch Nuclear Fire Service (HNFS) per procedure 40AC-ENG-008-0S, "Fire Protection Program." (SRO ONLY) (300.001.c.01)

26. IDENTIFY the personnel authorized to act as a Fire Brigade leader during a fire per procedure 40AC-ENG-008-0S, "Fire Protection Program." (SRO ONLY) (300.001.c.02)

4. Preparations are presently being made to startup the Unit One reactor. The following conditions exist:

Reactor Mode Switch: Shutdown
Reactor Pressure: 125 psig
All reactor vessel head closure bolts are fully tensioned
All rods are IN.

The reactor is in:

a. Mode 2
b. Mode 3
c. Mode 4
d. Mode 5

ANS: *b*
a,c,d incorrect, see table 1.1-1 (pg 1.1-8) in Unit 1 Tech Specs.
NEW

KA# Generic 2.1.22	***OBJ#*** 400.067.a.05	***REF*** LR-LP-30005	***COGNITIVE LVL*** 3

5. During a valve lineup, an operator needs to check a valve open. It is noted that the valve has a locking device on it. To check the valve position the operator should:

a. unlock the valve, turn it in the closed direction no more than 1/4 turn, place it full open, and replace the locking device
b. unlock the valve, turn it in the open direction, verify that the hand wheel moves less than 1/4 turn, and replace the locking device
c. leave the locking device installed, try to move the hand wheel to ensure locking device integrity, and verify stem position
d. leave the locking device installed, verify stem position, and verify administratively that the valve has not been repositioned.

ANS: *a*
b incorrect, check it in the closed direction
c,d incorrect, the locking device needs to be remove to check actual valve position.
NEW

KA# Generic 2.1.29	***OBJ#*** 300.022.a.06	***REF*** LT-LP-30004	***COGNITIVE LVL*** 1

15. G2.1.32 001

You have just been notified by the SOS that solvent based painting is scheduled to be performed in the Reactor Building which covers an area of the floor approximately 200 ft^2. The SBGT system takes a suction from this area when the system is in operation.

Which ONE of the following describes the effect of running the SBGT System under these conditions and the actions that should be taken prior to commencing painting?

A. The paint fumes increase the load on the SBGT fan. The CBO for each Unit should log that SBGT cannot be started for 4 hours after painting is complete.

B. The paint fumes will contaminate the SBGT Charcoal filters if the system is started while painting is in progress. Both SBGT switches should be placed in OFF until painting is complete.

C. The paint fumes will contaminate the SBGT Charcoal filters if the system is started within 4 hours of completing the painting. Tags should be hung on the SBGT Fan control switches stating "SOLVENT BASED PAINTING IN PROGRESS".

D. The paint fumes could start a fire in the SBGT Train due to the heater being on when the system initiates. Both SBGT switches should be placed in OFF until painting is complete.

Reference: 34SO-T46-001-2S Rev. 14 Pg 3

A. Incorrect since the paint fumes do not increase the load on the SBGT system. The fumes affect the operation of the charcoal filters.

B. Incorrect since you do not place the SBGT control switches in OFF when painting is in progress.

C. Correct answer per 34SO-T46-001-2S Precaution 5.1.4.

D. Incorrect since the paint fumes could not start a fire in the SBGT train and you do not place the SBGT control switches in OFF when painting is in progress.

RO Tier:	T3	SRO Tier:	T3
Keyword:	MCPR	Cog Level:	C/A 3.4/3.8
Source:	N	Exam:	HT02301
Test:	C	Misc:	

QUESTIONS REPORT
for Revision2 HT2002

1. G2.1.32 001

According to Amendment No. 167 to Facility Operating License NPF-5 the Safety Limit Minimum Critical Power Ratio (SLMCPR) values in TS 2.1.1.2 have been revised for Unit 2 Cycle 17 operation.

Which ONE of the following identifies the SLMCPR values for two recirculation loop operation and single recirculation loop operation with reactor steam dome pressure ≥ 785 psig and core flow ≥ 10% rated core flow AND actions required if limits exceeded?

A. Dual = 1.07, Single = 1.08, must restore compliance with limit within 1 hour and insert all insertable control rods within 2 hours.

B. Dual = 1.08, Single = 1.10, must restore compliance with limit and insert all insertable control rods within 2 hours.

C. Dual = 1.07, Single = 1.10, must restore compliance with limit within 2 hours and insert all insertable control rods within 12 hours.

D. Dual = 1.10, Single = 1.08, must restore compliance with limit and insert all insertable control rods within 12 hours.

Reference: Amendment No. 167 to NPF-5

A. Incorrect since these are the values prior to Amendment 167 and have 2 hours to restore limit and insert all insertable control rods.

B. Correct answer.

C. Incorrect since Duel value is prior to Amendment 167 and the Single value is the new value and have 2 hours to restore limit and insert all insertable control rods.

D. Incorrect since values are backwards and have 2 hours to restore limit and insert all insertable control rods.

RO Tier:	T3	SRO Tier:	T3
Keyword:	MCPR	Cog Level:	C/A 3.4/3.8
Source:	N	Exam:	HT02301
Test:	C	Misc:	

5.0 PRECAUTIONS/LIMITATIONS

5.1 PRECAUTIONS

5.1.1 IF solvent based painting is performed in an area served by the SBGT System, the system must NOT be operated with suction from that area for at least 4 hours following completion of the painting. IF a large amount of solvent based painting is performed (greater than 10 gallons), THEN contact engineering to determine the length of the waiting period.

5.1.2 IF a fire OR Chemical Release occurs in an area served by the SBGT System, the system must NOT be operated with suction from that area for at least 30 minutes following completion of the occurrence.

5.1.3 Operation of diesel fueled equipment (e.g. fork lift) in an area served by the SBGT System is acceptable provided all the following conditions are met:

- SBGT system must NOT be operated with its suction from that area for at least 1 hour after shutdown of the diesel fueled equipment.
- SBGT system must NOT be operated with its suction from that area for at least 4 hours after the clean up of any diesel fuel spill.

5.1.4 To prevent inadvertent SBGT System operation under the above listed conditions, tags, similar to that shown in Attachment 5, must be hung on both SBGT Fan Control Switches stating "SOLVENT BASED PAINTING IN PROGRESS".

5.1.5 The requirements of steps 5.1.1 through 5.1.4 are NOT intended to interfere with automatic OR manual system operation WHEN a valid initiation signal exists OR WHEN required by abnormal OR emergency operating procedures. In addition, these requirements may be waived by the SOS IF necessary.

5.1.6 IF SBGT system inadvertently starts during the operation of diesel fueled equipment OR PRIOR to the expiration of the 1 hour wait period, perform the following:

- Secure SBGT system as soon as possible.
- Initiate a Condition Report (CR) to report the amount time SBGT operated AND whether or not the diesel fueled equipment was operating.

5.1.7 IF SBGT system inadvertently starts during the occurrence of a diesel fuel spill OR PRIOR to the expiration of the 4 hour wait period after diesel fuel clean up, perform the following:

- Secure SBGT system as soon as possible.
- Initiate a CR to report the amount time SBGT operated AND the amount of diesel fuel spilled.

109. G2.1.32 001

According to Amendment No. 167 to Facility Operating License NPF-5 the Safety Limit Minimum Critical Power Ration (SLMCPR) values in TS 2.1.1.2 have been revised for Unit 2 Cycle 17 operation.

Which ONE of the following identifies the SLMCPR values for two recirculation loop operation and single recirculation loop operation with reactor steam dome pressure ≥ 785 psig and core flow ≥ 10% rated core flow AND actions required if limits exceeded?

A. Duel = 1.07, Single = 1.08, must restore compliance with limit within 1 hour and insert all insertable control rods within 2 hours.

B. Duel = 1.08, Single = 1.10, must restore compliance with limit and insert all insertable control rods within 2 hours.

C. Duel = 1.07, Single = 1.10, must restore compliance with limit within 2 hours and insert all insertable control rods within 12 hours.

D. Duel = 1.10, Single = 1.08, must restore compliance with limit and insert all insertable control rods within 12 hours.

Reference: Amendment No. 167 to NPF-5

A. Incorrect since these are the values prior to Amendment 167 and have 2 hours to restore limit and insert all insertable control rods.

B. Correct answer.

C. Incorrect since Duel value is prior to Amendment 167 and the Single value is the new value and have 2 hours to restore limit and insert all insertable control rods.

D. Incorrect since values are backwards and have 2 hours to restore limit and insert all insertable control rods.

RO Tier:	T3	SRO Tier:	T3
Keyword:	MCPR	Cog Level:	C/A 3.4/3.8
Source:	N	Exam:	HT02301
Test:	C	Misc:	

68. G2.1.32 001

According to Amendment No. 167 to Facility Operating License NPF-5 the Safety Limit Minimum Critical Power Ration (SLMCPR) values in TS 2.1.1.2 have been revised for Unit 2 Cycle 17 operation. Choose the correct SLMCPR values for two recirculation loop operation and single recirculation loop operation with reactor steam dome pressure ≥ 785 psig and core flow ≥ 10% rated core flow.

A. Duel = 1.07, Single = 1.08

B. Duel = 1.08, Single = 1.10

C. Duel = 1.07, Single = 1.10

D. Duel = 1.10, Single = 1.08

Reference: Amendment No. 167 to NPF-5

A. Incorrect since these are the values prior to Amendment 167.

B. Correct answer.

C. Incorrect since Duel value is prior to Amendment 167 and the Single value is the new value.

D. Incorrect since values are backwards.

11. G2.2.1 001

Unit 2 is in a startup and is currently at approximately 20% RTP. A heat balance has been performed and indicates that Core Thermal Power is 23% RTP. The APRM readings should be adjusted such that _____.

A. each APRM is reading between -2% to +2% of the heat balance value.

B. each APRM is reading between 0% to +2% of the heat balance value.

C. each APRM is reading between -2% to 0% of the heat balance value.

D. each APRM is reading between -1% and +1% of the heat balance value.

References: 34GO-OPS-001-2S Rev. 35.1 pg 33 of 61.
Unit 2 Tech Specs Section 3.3.1.1 (SR 3.3.1.1.2)

A.I Incorrect since the value must be between 0 and 2%.

B. Correct answer.

C. Incorrect since the value must be between 0 and 2%.

D. Incorrect since the value must be between 0 and 2%.

RO Tier:	T3	SRO Tier:	T3
Keyword:	APRM	Cog Level:	MEM 3.7/3.6
Source:	N	Exam:	HT02301
Test:	C	Misc:	TCK

111. G2.2.1 001

Unit 2 is in a startup and is currently at approximately 20% RTP. A heat balance has been performed and indicates that Core Thermal Power is 21% RTP. The APRM readings should be adjusted such that _____ and the adjustment must be made prior to reaching _____.

A. each APRM is reading between -2% to +2% of the heat balance value; 25% RTP.

B.✓ each APRM is reading between 0% to +2% of the heat balance value; 25% RTP.

C. each APRM is reading between -2% to 0% of the heat balance value; 28% RTP.

D. each APRM is reading between 0% and +2% of the heat balance value; 29% RTP.

References: 34GO-OPS-001-2S Rev. 35.1 pg 33 of 61.
Unit 2 Tech Specs Section 3.3.1.1 (SR 3.3.1.1.2)

A. Incorrect since the value must be between 0 and 2%.

B. Correct answer.

C. Incorrect since the value must be between 0 and 2% and prior to reaching 25% RTP.

D. Incorrect since the APRM's must be adjusted prior to 25% RTP.

RO Tier:	T3	SRO Tier:	T3
Keyword:	APRM	Cog Level:	MEM 3.7/3.6
Source:	N	Exam:	HT02301
Test:	C	Misc:	

QUESTIONS REPORT
for HT2002

1. G2.2.1 001

Unit 2 is in a startup and is currently at approximately 20% RTP. A heat balance has been performed and indicates that Core Thermal Power is 21% RTP. The APRM readings should be adjusted such that _____ and the adjustment must be made prior to reaching _____.

A. each APRM is reading between -2% to +2% of the heat balance value; 25% RTP.

B. each APRM is reading between 0% to +2% of the heat balance value; 25% RTP.

C. each APRM is reading between -2% to 0% of the heat balance value; 28% RTP.

D. each APRM is reading between 0% and +2% of the heat balance value; 29% RTP.

References: 34GO-OPS-001-2S Rev. 35.1 pg 33 of 61.
Unit 2 Tech Specs Section 3.3.1.1 (SR 3.3.1.1.2)

A. Incorrect since the value must be between 0 and 2%.

B. Correct answer.

C. Incorrect since the value must be between 0 and 2% and prior to reaching 25% RTP.

D. Incorrect since the APRM's must be adjusted prior to 25% RTP.

ACTIONS (continued)

CONDITION	REQUIRED ACTION	COMPLETION TIME
I. As required by Required Action D.1 and referenced in Table 3.3.1.1-1.	I.1 Initiate alternate method to detect and suppress thermal-hydraulic instability oscillations.	12 hours
	AND	
	I.2 Restore required channels to OPERABLE.	120 days
J. Required Action and associated Completion Time of Condition I not met.	J.1 Be in MODE 2.	4 hours

SURVEILLANCE REQUIREMENTS

----------NOTES----------

1. Refer to Table 3.3.1.1-1 to determine which SRs apply for each RPS Function.

2. When a channel is placed in an inoperable status solely for performance of required Surveillances, entry into associated Conditions and Required Actions may be delayed for up to 6 hours provided the associated Function maintains RPS trip capability.

SURVEILLANCE		FREQUENCY
SR 3.3.1.1.1	Perform CHANNEL CHECK.	12 hours
SR 3.3.1.1.2	----------NOTE---------- Not required to be performed until 12 hours after THERMAL POWER ≥ 25% RTP. ---------- Verify the absolute difference between the average power range monitor (APRM) channels and the calculated power is ≤ 2% RTP while operating at ≥ 25% RTP.	7 days

(continued)

7.5 TURBINE GENERATOR STARTUP, SYNCHRONIZATION AND LOADING

CONTINUOUS

7.5.1 At approximately 20% power, TRANSFER feedwater control to 3 element per 34SO-N21-007-2S, Condensate and Feedwater System. _____

7.5.2 At approximately 20% power, indicated by a computer OR manual heat balance, ensure an acceptable alternate power check by at least one of the following:

- With the CTP alternate power display available, the number of agreements is ≥ 2.

  Agreements _____ _____

  OR

- The bypass valve position is between 1.8 and 2.0 BPVs.

  No. of BPVs _____ _____

  OR

- The LPRM average, as calculated per Attachment 11, is WITHIN ± 3% of the calculated power. _____

7.5.3 At approximately 20% reactor power, adjust the APRMs per 34SV-SUV-021-0S, APRM Adjustment to Core Thermal Power, such that each APRM reading is between 0% and 2% greater than the power value calculated by a reactor heat balance. _____

7.5.4 After exceeding 20% power, notify I&C to set the MSL Rad Monitor Hi-Hi setpoints to the upper limit per 57SV-CAL-005-0S. _____

7.5.5 Notify the Load Dispatcher of the pending Turbine roll. _____

7.5.6 Confirm or set pressure setpoint to maintain a reactor pressure of approximately 920 psig prior to turbine roll. _____

7.5.7 START UP (roll) the Main Turbine per 34S0-N30-001-2S, Main Turbine Operation. _____

7.5.8 Prepare the Main Generator for Turbine Roll per 34SO-N40-001-2S, Main Generator Operation. _____

117. G2.3.1 001

Which ONE of the following is the Plant Hatch initial administrative dose limit to the skin or any extremity (SDE)?

A. 2 rem/year

B. 6 rem/year

C. 15 rem/year

D. 20 rem/year

References: LT-LP-30008-02 Rev.2 pg 7 and 8 of 28
SRO exam 95-01 test question #92.
Modified the question from LDE limit to SDE limit and changed appropriate answer.

A. Incorrect since this is the annual admin limit for TEDE.

B. Incorrect since this is the annual LDE limit.

C. Incorrect since this is the 10 CFR annual LDE limit.

D. Correct answer.

RO Tier:	T3	SRO Tier:	T3
Keyword:	DOSE RATE LIMITS	Cog Level:	MEM 2.6/3.0
Source:	M	Exam:	HT02301
Test:	C	Misc:	

2. G2.3.1 001

The Plant Hatch initial administrative dose limit to the skin or any extremity (SDE) is:

A. 2 rem/year
B. 6 rem/year
C. 15 rem/year
D.✓ 20 rem/year

References: LT-LP-30008-02 Rev.2 pg 7 and 8 of 28
SRO exam 95-01 test question #92.
Modified the question from LDE limit to SDE limit and changed appropriate answer.

A. Incorrect since this is the annual admin limit for TEDE.

B. Incorrect since this is the annual LDE limit.

C. Incorrect since this is the 10 CFR annual LDE limit.

D. Correct answer.

a. An annual limit which is the more limiting of:

1) The total effective dose equivalent (TEDE) being equal to 5 Rem; or

2) The sum of the Deep Dose Equivalent (DDE) and the Committed Dose Equivalent (CDE) to any individual organ or tissue, other than the lens of the eye, being equal to 50 Rems.

TEDE=DDE + CEDE
CEDE is the committed effective dose equivalent.

Review the definition of the radiation terms used here:
TEDE, DDE, CDE, LDE, SDE.

GET book is good reference.

b. The annual limit to the lens of the eye, Lens Dose Equivalent (LDE), is 15 Rem.

c. A Shallow Dose Equivalent (SDE) to the skin or any extremity of 50 Rem/yr.

d. Individuals under 18 years old are limited to 10% of the above limits.

5. 10CFR20 Limits, Planned exposures

Planned special exposures are limited to:

a. The numerical values of any of the dose limits in section 4.a above in any year less any dose received in excess of the annual limits for that year.

b. Five times the annual dose limits in 4.a during the individuals life time less any excess exposures.

Question:
How much radiation would receive prior to being put on the margin list?

Answer:
1500 mR

LO 1
Question:
How do our Admin Guidelines relate to 10CFR20 limits?

Answer:
Admin is 90% of 10CFR limits and is incremented.

Question:
What is our initial exposure limit in relation to 10CFR20 limits?

Answer:
40%

6. Plant Hatch Administrative Limits

Provisions for exceeding these limits are available, however it requires that the available exposure must be confirmed and various levels of authorization required depending upon the extent of exposure to be allowed. Exposure must remain within 10 CFR 20 limits.

No person under 18 years old is to be occupationally exposed to ionizing radiation.

a. Annual Administrative Guides

1) Total Effective Dose Equivalent (TEDE) (DDE + CEDE = TEDE)

4500 mR (External whole body plus weighted organ dose)

Initial Limit: 2000 mR/year TEDE

2) Deep-Dose Equivalent plus Committed Dose Equivalent (DDE plus CDE)
45,000 mR (External whole body plus individual organ dose)

Initial Limit: 20,000 mR/year

3) Lens Dose Equivalent (LDE)
13,500 mR

Initial Limit: 6,000 mR/year

4) Shallow Dose Equivalent (SDE)
45,000 mR to the skin or any extremity

Initial Limit: 20,000 mR/year

92. The Plant Hatch initial administrative dose limit to the lens of the eye (LDE) is:

a. 2 rem/year
b. 5 rem/year
c. 6 rem/year
d. 15 rem/year

ANS: *c*
a,b,d incorrect, see 60AC-HPX-001
NEW

KA# Generic 2.3.1	***OBJ#*** LT-30008.001	***REF*** LT-LP-30008	***COGNITIVE LVL*** 1

93. Health Physics technicians have surveyed the main steam chase during an outage and obtained the following results:

Area Dose Rates one foot from the source:	83 mr/hr
Airborne Concentration:	.25 DAC
Smear Results:	750 dpm/100 cm^2

Based on these results the area should be posted as a:

a. Radiation Area
b. High Radiation Area
c. Airborne Radioactivity Area
d. Contaminated Area

ANS: *a*
b incorrect, < 100 mr/hr
c incorrect, < .3 DAC
d incorrect, < 1000 dpm/100 cm^2
NEW

KA# Generic 2.3.2	***OBJ#*** LT-30008.002	***REF*** LT-LP-30008	***COGNITIVE LVL*** 3

118. G2.3.2 001

Health Physics technicians have surveyed the main steam chase during an outage and obtained the following results:

Area Dose Rates one foot from the source:	75 mR/hr
Airborne Concentration:	.23 DAC
Smear Results:	650 dpm/100cm2

Bases on these results which ONE of the following states how the area should be posted?

A. Contaminated Area.

B. Airborne Radioactivity Area.

C. Radiation Area.

D. High Radiation Area.

References: LT-LP-30008 Rev. 2 pg 13-17 of 28
SRO exam 95-01 question #93.
Changed numbers in stem but with same results and reordered answers.

A. Incorrect since < 1000dpm/100cm2.

B. Incorrect since < .3 DAC.

C. Correct answer.

D. Incorrect since < 100 mR/hr.

RO Tier:	T3	SRO Tier:	T3
Keyword:	DOSE RATE LIMITS	Cog Level:	MEM 2.5/2.9
Source:	B	Exam:	HT02301
Test:	C	Misc:	

QUESTIONS REPORT
for HT2002

1. G2.3.2 001

Health Physics technicians have surveyed the main steam chase during an outage and obtained the following results:

Area Dose Rates one foot from the source:	75 mR/hr
Airborne Concentration:	.23 DAC
Smear Results:	650 dpm/100cm2

Bases on these results tha area should be posted as a:

A. Contaminated Area.

B. Airborne Radioactivity Area.

C. Radiation Area.

D. High Radiation Area.

References: LT-LP-30008 Rev. 2 pg 13-17 of 28
SRO exam 95-01 question #93.
Changed numbers in stem but with same results and reordered answers.

A. Incorrect since < 1000dpm/100cm2.

B. Incorrect since < .3 DAC.

C. Correct answer.

D. Incorrect since < 100 mR/hr.

Discuss 60AC-HPX-004-0S, Radiation and Contamination Control

C. 60AC-HPX-004-0S, Radiation and Contamination Control

1. This procedure establishes requirements and responsibilities for monitoring and controlling exposure to radiation and contamination, including criteria for Radiation Control Areas, Radiation Work Permit (RWP), sampling and surveys, and temporary shielding.

2. Personnel Responsibilities

   a. Practice ALARA.

   b. Comply with ALL radiation protection rules, regulations and procedures.

   c. Read and comply with requirements of RWP whenever duties requires such authorization.

   d. Properly survey themselves and their personal articles for contamination when leaving operating buildings that house radiation control areas and posted contaminated areas.

LO 2a

Question:
Is the service building an RCA?

Answer:
No

3. Radiation Control Area

Any area which contains radiation, contamination, or radioactive materials present in quantities or levels sufficient to require protective measures.

LO 2b

Question:
How many mR is 0.1R?

Answer:
100 mR

4. **Radiation Area**

Any area accessible to personnel in which there exists radiation at such levels that a major portion of the body could receive in any one hour a dose in excess of 5 mR at 30 cm from a source.

Radiation areas shall be conspicuously posted with the standard radiation caution symbol and the words **"Caution Radiation Area".**

LO 2c

5. **High Radiation Area**

a. High Radiation Area means an area, accessible to individuals, in which radiation levels could result in an individual receiving a dose equivalent in excess of 0.1 Rem in 1 hour at 30 centimeters from the radiation source OR from any surface that the radiation penetrates.

b. High radiation areas shall be barricaded and conspicuously posted with a sign unique to that type area, that has the standard radiation caution symbol and the words **"Danger High Radiation Area"**.

c. Entrance to high radiation areas in which the intensity of radiation is greater than 100 mR/hr shall be controlled by issuance of a Radiation Work Permit. Any individual or group of individuals permitted to enter such areas shall be provided with OR accompanied by one or more of the following:

1) A radiation monitoring device which continuously indicates the radiation dose rate in the area.

2) A radiation monitoring device which continuously integrates the radiation dose rate in the area and alarms when a preset cumulative dose is received. Entry into such areas is permitted after the dose rate level has been made known to personnel.

3) An individual qualified in radiation protection procedures who is equipped with a radiation dose rate monitoring device. This individual shall be responsible for controlling activities within the area and performing radiological monitoring at the frequency specified in the Radiation Work Permit.

d. Each High Radiation Area in which the intensity of radiation is greater than 1000 mR/hr shall be locked to prevent unauthorized entry into such areas. The doors shall be locked in such a way that no individual will be prevented from leaving the area. The keys will be controlled in accordance with 62RP-RAD-016-0S, High Radiation Area Access Control. These doors will normally be painted red.

LO 2d

6. **Very High Radiation Area**

a. Very High Radiation Areas are areas which could be made accessible to an individual in which the potential radiological condition could result in the following situations:

1) An individual entering this area could receive an absorbed dose in excess of 500 rad in one hour at 1 meter.

2) An area where the radiological conditions could increase very rapidly resulting in an individual receiving an acute overexposure, exceeding Administrative AND/OR Federal limits.

b. Very High Radiation Areas shall be locked AND conspicuously posted with a sign unique to that type area that has the standard radiation caution symbol and the words **"Grave Danger, Very High Radiation Area"**. The doors to Very High Radiation Areas will normally be painted orange.

c. Entrance to a Very High Radiation Area shall be controlled by issuance of a Radiation Work Permit. Any individual or group of individuals permitted to enter such areas shall be provided with the following:

1) A radiation monitoring device which continuously integrates the radiation dose rate in the area and alarms when a preset cumulative dose is received.

2) High range dosimetry and a whole body TLD will be required.

3) An individual qualified in radiation protection procedures who is equipped with a radiation dose rate monitoring device. This individual shall be responsible for controlling activities within the area and performing radiological monitoring at the frequency specified in the Radiation Work Permit.

4) Each Very High Radiation Area in which the intensity of radiation is greater than 500 rad/hr shall be locked to prevent unauthorized entry into such areas. The doors shall be locked in such a way that no individual will be prevented from leaving the area. The keys will be controlled in accordance with 62RP-RAD-016-0S, High Radiation Area Access Control.

LO 2e

7. **Contaminated Area**

a. A Contaminated Area is any area where surface contamination exceeds:

1) Loose surface radioactive contamination

2) Beta-gamma of 1000 dpm/100cm^2

3) Alpha of 50 dpm/100cm^2

b. Contaminated Areas must be conspicuously posted with the standard radiation caution symbol and the words
"Caution Contaminated Area"
or
"Danger Contaminated Area".

c. HP will take measures to minimize the migration of high contamination to low or uncontaminated areas.

d. Areas where activities such as opening a contaminated system or grinding/or machining on contaminated surfaces must be controlled as contaminated areas.

LO 2f

8. **Airborne Radioactivity Area**

a. Any area in which airborne concentrations of radioactive materials exceed 30% of the limits in 10CFR20, Appendix B, Table I, Column 3 shall be considered an Airborne Radioactivity Area.

b. All entrances to these areas shall be posted with the standard radiation symbol with the words **"Caution Airborne Radioactivity Area."**

c. Posting is also recommended for operations likely to cause airborne contamination such as initial opening of reactor systems, grinding, welding, burning or operating air-operated equipment in contaminated areas.

9. Hot Spot

Components or items having contact readings greater than 250 mR/hr and more than 5 times the ambient dose rates (18" from source).

Refer to 62RP-RAD-006-0S, RWP Processing

10. Radiation Work Permits

a. Required for entry into

1. High Radiation Area

2. Very High Radiation Area

3. Contaminated Area (recommended)

4. Airborne Radioactivity Area

92. The Plant Hatch initial administrative dose limit to the lens of the eye (LDE) is:

a. 2 rem/year
b. 5 rem/year
c. 6 rem/year
d. 15 rem/year

ANS: *c*
a,b,d incorrect, see 60AC-HPX-001
NEW

KA# Generic 2.3.1	***OBJ#*** LT-30008.001	***REF*** LT-LP-30008	***COGNITIVE LVL*** 1

93. Health Physics technicians have surveyed the main steam chase during an outage and obtained the following results:

Area Dose Rates one foot from the source:	83 mr/hr
Airborne Concentration:	.25 DAC
Smear Results:	750 dpm/100 cm^2

Based on these results the area should be posted as a:

a. Radiation Area
b. High Radiation Area
c. Airborne Radioactivity Area
d. Contaminated Area

ANS: *a*
b incorrect, < 100 mr/hr
c incorrect, < .3 DAC
d incorrect, < 1000 dpm/100 cm^2
NEW

KA# Generic 2.3.2	***OBJ#*** LT-30008.002	***REF*** LT-LP-30008	***COGNITIVE LVL*** 3

121. G2.4.12 001

Unit 1 was operating at 50% RTP when a steam leak in the Drywell caused a Reactor Scram on High Drywell Pressure. The Shift Supervisor entered all appropriate EOP's for this condition and ordered Torus Sprays to be initiated per PC/P leg. Subsequently, Drywell Temperature increased to 160°F.

Which ONE of the following states the appropriate action for the crew to take in this situation?

A. The Control Board Operator announces the new Entry Condition for PC-1 Primary Containment Control. The Shift Supervisor circles this entry condition and continues on in the PC-1 Primary Containment Control flow chart at the current steps.

B. The Control Board Operator announces the new Entry Condition for PC-1 Primary Containment Control. The Shift Supervisor circles the entry condition and orders actions for Drywell Temperature leg only.

C. The Control Board Operator continues to place Torus Sprays in service and updates the crew at the next Brief that Drywell Temperature has increased >150°F.

D. ✓ The Control Board Operator announces the new Entry Condition for PC-1 Primary Containment Control. The Shift Supervisor circles the entry condition and re-enters all legs of PC-1 Primary Containment Control.

References: PC-1 Primary Containment Control Rev. 4
30AC-OPS-013-0S Rev. 9.1 pg 5 of 10.

A. Incorrect since Shift Supervisor must re-enter all legs of the flow chart.

B. Incorrect since Shift Supervisor must re-enter all legs of the flow chart.

C. Incorrect since Control Board Operator should immediately announce an entry condition into the EOP's.

D. Correct answer.

RO Tier:	T3	SRO Tier:	T3
Keyword:	EOP PC CONTROL	Cog Level:	C/A 3.4/3.9
Source:	N	Exam:	HT02301
Test:	C	Misc:	TCK

QUESTIONS REPORT
for HT2002

1. G2.4.12 001

Unit 1 was operating at 50% RTP when a steam leak in the Drywell caused a Reactor Scram on High Drywell Pressure. The Shift Supervisor entered all appropriate EOP's for this condition and ordered Torus Sprays to be initiated per PC/P leg. Subsequently, Drywell Temperature increased to 160 F. SELECT the appropriate action for the crew to take in this situation?

A. The Control Board Operator announces the new Entry Condition for PC-1 Primary Containment Control. The Shift Supervisor circles this entry condition and continues on in the PC-1 Primary Containment Control flow chart at the current steps.

B. The Control Board Operator announces the new Entry Condition for PC-1 Primary Containment Control. The Shift Supervisor circles the entry condition and orders actions for Drywell Temperature leg only.

C. The Control Board Operator continues to place Torus Sprays in service and updates the crew at the next Brief that Drywell Temperature has increased >150 F.

D. The Control Board Operator announces the new Entry Condition for PC-1 Primary Containment Control. The Shift Supervisor circles the entry condition and re-enters all legs of PC-1 Primary Containment Control.

References: PC-1 Primary Containment Control Rev. 4
30AC-OPS-013-0S Rev. 9.1 pg 5 of 10.

A. Incorrect since Shift Supervisor must re-enter all legs of the flow chart.

B. Incorrect since Shift Supervisor must re-enter all legs of the flow chart.

C. Incorrect since Control Board Operator should immediately announce an entry condition into the EOP's.

D. Correct answer.

8.2 EOP USE

8.2.1 Entry and Exit

Entry into an EOP is required anytime an entry condition is reached. Annunciator Response Procedures corresponding to the EOP parameter will lead the operator to the correct EOP flow chart IF the annunciator setpoint is the same as the entry condition. IF the annunciator setpoint is more conservative than the EOP entry condition, the ARP may lead the operator into an Abnormal Procedure which will THEN lead to the EOP, OR it may tell the operator that the condition may degrade to the point where EOP entry would be required.

It is necessary to enter OR re-enter the EOP anytime an entry condition is reached. For example, the EOP is entered for low RPV level AND, later, the RPV high pressure setpoint is reached, the user must go back to the top of the chart AND re-enter the EOP. Entry will always be to the appropriate flow chart. Supplemental EOP procedures are entered only as directed per an EOP or severe accident guidelines (SAG) flow chart.

Exit from the EOP may be accomplished in four ways. One way is to complete the EOP required actions AND thus exit to the appropriate Normal Operating Procedure.

Another way to exit from the EOP is IF all entry conditions have cleared AND in the Shift Supervisor's judgment an emergency no longer exists. For example, a reactor scram occurs due to a turbine trip, in the initial part of the transient, RPV level drops below the EOP entry condition level but is soon recovered AND held stable at the normal level. IF no other entry conditions exist, the Shift Supervisor may exit the EOP and return to Normal Operating Procedures. He may also elect to stay in the EOP. Remaining in the EOP will always place the plant in a safe condition.

It is also possible to exit from the EOP IF an entry condition exists but, in the judgment of the Shift Supervisor, remaining in the EOP is NOT necessary. This will only be done IF the exact event causing the problem is known, AND actions to correct the problem are identified in another procedure. Otherwise, the Shift Supervisor must remain in the EOP UNTIL all entry conditions clear.

The last method to exit from the EOP is IF primary containment flooding is required. THEN the EOP will direct the flow chart user to exit the EOP and enter the SAG.

Following exit from the EOP, plant systems shall be realigned to their standby status per applicable System Operating Procedures. This shall be done as required based on existing plant conditions AND only as directed by the Shift Supervisor.

PC-1 PRIMARY CONTAINMENT CONTROL

Torus water level above 150 in.

Primary containment hydrogen concentration above 2.5%

Torus water level below 146 in.

Drywell temperature above 150 °F

Torus water temperature above 100 °F

Drywell pressure above 1.85 psig

WHILE PERFORMING THE FOLLOWING

IF PRIMARY CONTAINMENT FLOODING IS OR HAS BEEN REQUIRED — THEN exit the EOPs and enter the Severe Accident Guidelines → Go to SAGs

PERFORM CONCURRENTLY

PC/G

GO TO ANY entry condition on PC-2

SP/L

NOTE 2
If fuel failure is suspected consult with Plant Chemistry prior to discharging water

Monitor and control torus water level between 146 in. and 150 in. using:
- CS for low water levels per 34SO-E21-001-1S
- RHR for high water levels per 34SO-E11-010-1S

WAIT UNTIL torus water level CANNOT be maintained between 146 in. and 150 in.

Is torus water level below 146 in. or above 150 in.?
- BELOW 146
- ABOVE 150

PERFORM CONCURRENTLY

Maintain torus water level above 102 in. per 34SO-E21-001-1S or 34GO-OPS-087-1S

WAIT UNTIL torus water level CANNOT be maintained above 102 in.

PERFORM CONCURRENTLY RC(A) point A

EMERGENCY DEPRESS IS REQUIRED

Maintain torus water level above 115 in. per 34SO-E21-001-1S or 34GO-OPS-087-1S

WAIT UNTIL torus water level CANNOT be maintained above 115 in.

Trip and prevent operation of HPCI irrespective of adequate core cooling

IF RCIC or HPCI is operating
THEN defeat high torus water level suction transfer logic per 31EO-EOP-100-1S

PERFORM CONCURRENTLY

SP/T

3

Monitor and control torus water temperature below 100°F using available torus cooling per 34SO-E11-010-1S

WAIT UNTIL torus water temperature CANNOT be maintained below 100°F

5

Operate ALL available torus cooling per 34SO-E11-010-1S EXCEPT RHR pumps required for adequate core cooling by continuous operation in LPCI mode

BEFORE torus water temperature reaches BIIT curve limit (Graph 5)

PERFORM CONCURRENTLY RC(A) point A

WAIT UNTIL torus water temperature AND reactor pressure CANNOT be maintained below Heat Capacity Temperature Limit (Graph 2)

EMERGENCY DEPRESS IS REQUIRED

DW/T

1

Monitor and control drywell temperature below 150°F using:
- Drywell cooling fans per 34SO-T47-001-1S

PC/P

1

Monitor and control containment pressure below 1.85 psig using:
- containment pressure control systems per 34SO-T48-002-1S
- SBGT per 34SO-T46-001-1S

WAIT UNTIL primary containment pressure CANNOT be maintained below 1.85 psig

WHILE PERFORMING THE FOLLOWING

IF primary containment water level and torus pressure CANNOT be maintained below Primary Containment Pressure Limit (Graph 13) — THEN terminate sprays from sources external to the primary containment

7

WHILE PERFORMING THE FOLLOWING

IF torus sprays have been initiated AND BEFORE torus pressure drops to 0 psig — THEN terminate torus sprays

NOTE 3
Torus pressure is indicated on the following:
- 1T48-PI-R632A (P657)
- 1T48-PI-R632B (P654)
- 1T48-PR-R608 (P657)
- 1T48-PR-R609 (P650)

BEFORE torus pressure reaches 10 psig

3

IF torus water level is below 285 in.
THEN initiate torus sprays per 34SO-E11-010-1S EXCEPT RHR pumps required for adequate core cooling by continuous injection in LPCI mode

7

WHILE PERFORMING THE FOLLOWING

IF drywell sprays have been initiated AND BEFORE drywell pressure drops to 0 psig — THEN terminate drywell sprays

WAIT UNTIL torus pressure is above 10 psig

[redacted]

16. G2.4.16 001

Unit 1 is operating at 100% RTP. Drywell temperature has been increasing steadily and is currently at 275°F and increasing. All other parameters are within their normal operating band.

Which ONE of the following describes the proper directions and sequence of events to the point of placing the Mode Switch in Shutdown?
(Provide RO copy of RC RPV CONTROL (NON ATWS) and PC-1 PRIMARY CONTAINMENT CONTROL)

A. Enter RC RPV CONTROL (NON ATWS) at Point A due to Drywell High Temperature. Place the Mode Switch in Shutdown per RC-1 then enter PC-1 to control Drywell temperature.

B. Enter PC-1 when Drywell Temperature exceeds 150°F. Enter RC RPV CONTROL at point A before Drywell Temperature reaches 340°F. Perform RC-1 to manually scram the reactor and place the Mode Switch in Shutdown.

C. Enter RC RPV CONTROL (NON ATWS) due to a condition which requires a reactor scram and reactor power is above 5%. Perform RC-1 to manually scram the reactor and place the Mode Switch in Shutdown.

D. Enter PC-1 when Drywell Temperature exceeds 150°F. Enter RC RPV CONTROL at point A before Drywell Temperature reaches 280°F. Perform RC-1 to manually scram the reactor and place the Mode Switch in Shutdown.

References: RC RPV CONTROL (NON ATWS) Rev. 6
PC-1 PRIMARY CONTAINMENT CONTROL Rev. 4

A. Incorrect since this is improper sequence for getting to the point of placing the Mode Switch in Shutdown.

B. Incorrect since you enter RC RPV CONTROL "before" drywell temperature reaches 280°F. 340°F is associated with Unit 2.

C. Incorrect since RC RPV CONTROL is entered from PC-1 PRIMARY CONTAINMENT CONTROL.

D. Correct answer.

RO Tier:	T3	SRO Tier:	T3
Keyword:	DRYWELL TEMPERATURE	Cog Level:	C/A 3.0/4.0
Source:	N	Exam:	HT02301
Test:	C	Misc:	TCK

122. G2.4.16 001

Unit 1 is operating at 100% RTP. Drywell temperature has been increasing steadily and is currently at 275°F and increasing. All other parameters are within their normal operating band.

Which ONE of the following describes the proper directions and sequence of events to the point of placing the Mode Switch in Shutdown?

A. Enter RC RPV CONTROL (NON ATWS) at Point A due to Drywell High Temperature. Place the Mode Switch in Shutdown per RC-1 then enter PC-1 to control Drywell temperature.

B. Enter PC-1 when Drywell Temperature exceeds 150°F. Enter RC RPV CONTROL at point A before Drywell Temperature reaches 340°F. Perform RC-1 to manually scram the reactor and place the Mode Switch in Shutdown.

C. Enter RC RPV CONTROL (NON ATWS) due to a condition which requires a reactor scram and reactor power is above 5%. Perform RC-1 to manually scram the reactor and place the Mode Switch in Shutdown.

D. Enter PC-1 when Drywell Temperature exceeds 150°F. Enter RC RPV CONTROL at point A before Drywell Temperature reaches 280°F. Perform RC-1 to manually scram the reactor and place the Mode Switch in Shutdown.

References: RC RPV CONTROL (NON ATWS) Rev. 6
PC-1 PRIMARY CONTAINMENT CONTROL Rev. 4

A. Incorrect since this is improper sequence for getting to the point of placing the Mode Switch in Shutdown.

B. Incorrect since you enter RC RPV CONTROL "before" drywell temperature reaches 280°F. 340°F is associated with Unit 2.

C. Incorrect since RC RPV CONTROL is entered from PC-1 PRIMARY CONTAINMENT CONTROL.

D. Correct answer.

RO Tier:	T3	SRO Tier:	T3
Keyword:	DRYWELL TEMPERATURE	Cog Level:	C/A 3.0/4.0
Source:	N	Exam:	HT02301
Test:	C	Misc:	TCK

15. G2.4.16 001

Unit 1 is operating at 100% RTP. Drywell temperature has been increasing steadily and is currently at 275°F and increasing. All other parameters are within their normal operating band.

Which ONE of the following describes the proper directions and sequence of events to the point of placing the Mode Switch in Shutdown?

A. Enter RC RPV CONTROL (NON ATWS) at Point A due to Drywell High Temperature. Place the Mode Switch in Shutdown per RC-1 then enter PC-1 to control Drywell temperature.

B. Enter PC-1 when Drywell Temperature exceeds 150°F. Enter RC RPV CONTROL at point A before Drywell Temperature reaches 340°F. Perform RC-1 to manually scram the reactor and place the Mode Switch in Shutdown.

C. Enter RC RPV CONTROL (NON ATWS) due to a condition which requires a reactor scram and reactor power is above 5%. Perform RC-1 to manually scram the reactor and place the Mode Switch in Shutdown.

D. Enter PC-1 when Drywell Temperature exceeds 150°F. Enter RC RPV CONTROL at point A before Drywell Temperature reaches 280°F. Perform RC-1 to manually scram the reactor and place the Mode Switch in Shutdown.

References: RC RPV CONTROL (NON ATWS) Rev. 6
PC-1 PRIMARY CONTAINMENT CONTROL Rev. 4

A. Incorrect since this is improper sequence for getting to the point of placing the Mode Switch in Shutdown.

B. Incorrect since you enter RC RPV CONTROL "before" drywell temperature reaches 280°F. 340°F is associated with Unit 2.

C. Incorrect since RC RPV CONTROL is entered from PC-1 PRIMARY CONTAINMENT CONTROL.

D. Correct answer.

RC RPV CONTROL (NON-ATWS)

A condition which requires reactor scram and reactor power is above 5%

A condition which requires reactor scram and reactor power CANNOT be determined

RWL below + 3 in.

Reactor pressure above 1080 psig

Drywell pressure above 1.85 psig

WHILE PERFORMING THE FOLLOWING

IF	THEN
PRIMARY CONTAINMENT FLOODING IS OR HAS BEEN REQUIRED	exit the EOPs and enter the Severe Accident Guidelines

→ Go to SAGs

Perform RC-1, RC-2, RC-3

WHILE PERFORMING THE FOLLOWING

IF	THEN
ALL control rods are NOT inserted to or beyond position 02 AND control rods are NOT inserted to a cold shutdown rod configuration	perform RPV Control (ATWS)

→ Go to RCA point A

PERFORM CONCURRENTLY

RC/P

2

WHILE PERFORMING THE FOLLOWING

IF	THEN
is anticipated, /L	rapidly depress with main turbine bypass valves, irrespective of the resulting cooldown rate.
RESS IS, QUIRED	perform Emergency Depress
etermined	perform RPV Flooding
above	prevent injection from CS and LPCI pumps per 31EO-EOP-114-1S EXCEPT when required for adequate core cooling

→ GO TO CP-1 point G

→ GO TO CP-2 point J

NOTE 1
CS shutoff head = 280 psig
LPCI shutoff head = 220 psig

IF ANY SRV is cycling on its relief setpoint
THEN manually open SRVs UNTIL reactor pressure is below 960 psig use sequence listed in Table 1

WHILE PERFORMING THE FOLLOWING

IF	THEN
ure ned below mperature Limit	maintain reactor pressure below the limit, irrespective of the resulting cooldown rate.
ned below vel Limit	maintain reactor pressure below the limit, irrespective of the resulting cooldown rate.
S REQUIRED	perform Steam Cooling

→ GO TO CP-1 point F

3 4 5

Stabilize reactor pressure below 1080 psig with main turbine bypass valves. If desired use one or more of the following:

- Low Low Set
  if necessary, allow reactor pressure to exceed 1080 psig then OPEN any SRV to initiate LLS
- Alternate Reactor Pressure Control System(s) in Table 1 per 31EO-EOP-107-1S

WAIT UNTIL

a reduction in reactor pressure will NOT complicate RWL control

Begin re...sure reduction per 34GO-OPS-013-1S
AND
maintain the cooldown rate below 100 °F/hr, defeating isolation interlocks and restoring drywell pneumatics if necessary per 31EO-EOP-100-1S

IF one or more SRVs are being used to

RC/Q

→ GO TO 34AB-C71-001-1S

RC/L

B

1 2

Confirm automatic actions:
- ISOLATION per 34AB-C71-001-1S
- ECCS
- EMERGENCY DIESEL GENERATOR

WHILE PERFORMING THE FOLLOWING

IF	THEN
RWL CANNOT be determined	perform RPV Flooding
primary containment water level and torus pressure CANNOT be maintained below Primary Containment Pressure Limit (Graph 13) AND adequate core cooling can be assured	terminate injection into the RPV from sources external to the primary containment

→ GO TO CP-2 point J

3 4 5

Restore and maintain RWL between +3 in. and +50 in. using Table 2 system(s)

IF RWL CANNOT be restored and maintained above +3 in.
THEN maintain RWL above -155 in. using Table 2 system(s)

IF required by ALC
THEN use Table 9 system(s) per 31EO-EOP-110-1S

WHILE PERFORMING THE FOLLOWING

IF	THEN
RWL CANNOT be restored and maintained above -155 in.	perform Alternate Level Control

→ GO TO CP-1 point E

IF the ADS timer has initiated
THEN Inhibit ADS

Table 1 ALTERNATE REACTOR PRESSURE CONTROL SYSTEM(S)

3 4 5

- SRVs ONLY when torus water level is above +63 in., defeating pneumatic supply isolation interlocks and restoring the pneumatic supply if necessary per 31EO-EOP-100-1S:
  Preferred sequence: G, D, L, H, E, F, A, J, K, C, B.
  If continuous SRV pneumatic supply is or becomes unavailable, place each SRV control switch in CLOSE or AUTO.
- HPCI with suction from the condensate storage tank if available.
- RCIC with suction from the condensate storage tank if available.

PC-1 PRIMARY CONTAINMENT CONTROL

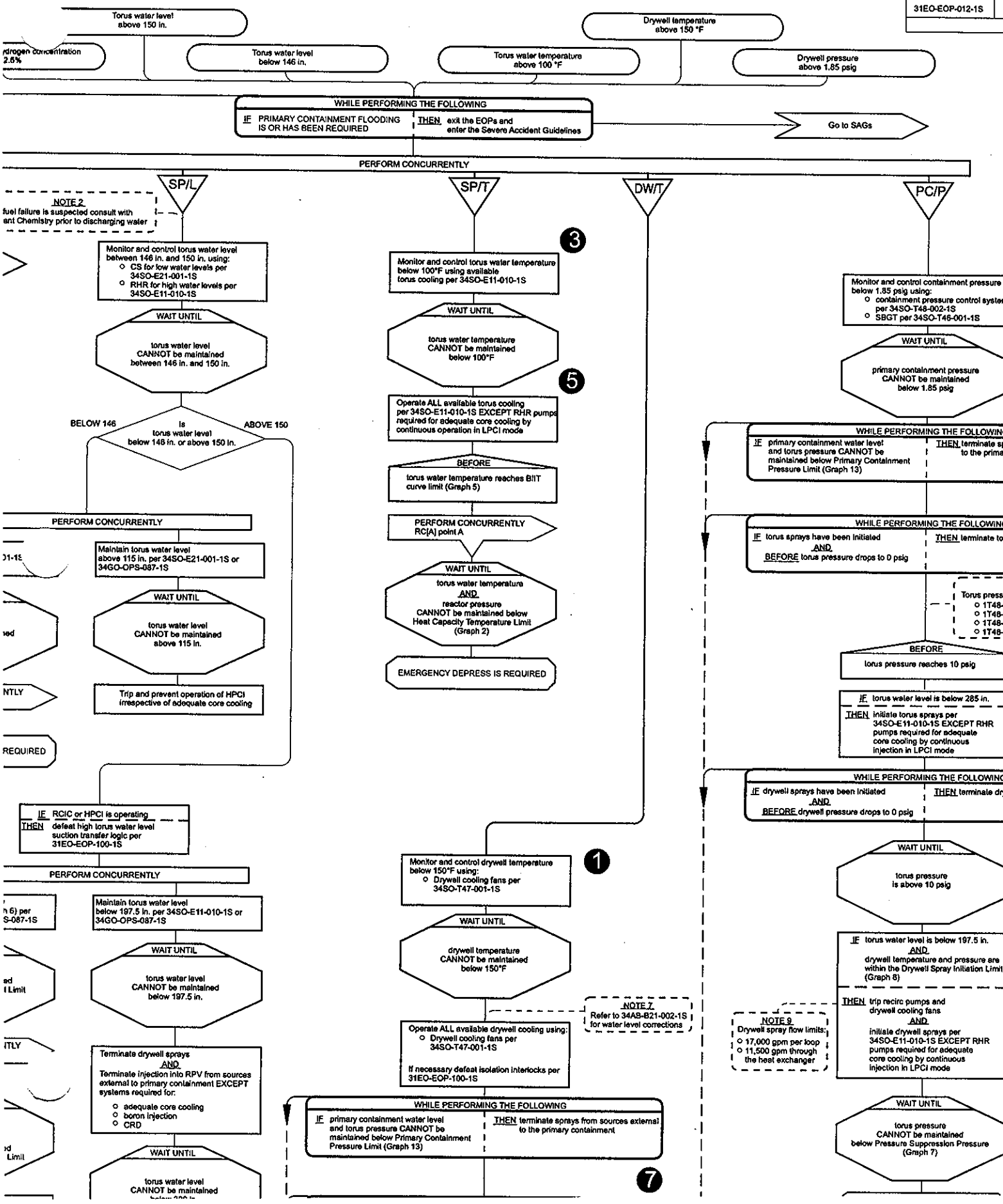

torus water level CANNOT be maintained between 146 in. and 150 in.

BELOW 146 — Is torus water level below 146 in. or above 150 in. — ABOVE 150

FORM CONCURRENTLY

Maintain torus water level above 115 in. per 34SO-E21-001-1S or 34GO-OPS-087-1S

WAIT UNTIL

torus water level CANNOT be maintained above 115 in.

Trip and prevent operation of HPCI irrespective of adequate core cooling

C or HPCI is operating
at high torus water level
tion transfer logic per
O-EOP-100-1S

FORM CONCURRENTLY

Maintain torus water level below 197.5 in. per 34SO-E11-010-1S or 34GO-OPS-087-1S

WAIT UNTIL

torus water level CANNOT be maintained below 197.5 in.

Terminate drywell sprays
AND
Terminate injection into RPV from sources external to primary containment EXCEPT systems required for:
- adequate core cooling
- boron injection
- CRD

WAIT UNTIL

torus water level CANNOT be maintained below 300 in.

Determine primary containment water level per 31EO-EOP-105-1S

CANNOT be maintained below 100°F

5

Operate ALL available torus cooling per 34SO-E11-010-1S EXCEPT RHR pumps required for adequate core cooling by continuous operation in LPCI mode

BEFORE

torus water temperature reaches BIIT curve limit (Graph 5)

PERFORM CONCURRENTLY
RC(A) point A

WAIT UNTIL

torus water temperature
AND
reactor pressure
CANNOT be maintained below Heat Capacity Temperature Limit (Graph 2)

EMERGENCY DEPRESS IS REQUIRED

Monitor and control drywell temperature below 150°F using:
- Drywell cooling fans per 34SO-T47-001-1S

1

WAIT UNTIL

drywell temperature CANNOT be maintained below 150°F

NOTE 7
Refer to 34AB-B21-002-1S for water level corrections

Operate ALL available drywell cooling using:
- Drywell cooling fans per 34SO-T47-001-1S

If necessary defeat isolation interlocks per 31EO-EOP-100-1S

WHILE PERFORMING THE FOLLOWING

IF	THEN
primary containment water level and torus pressure CANNOT be maintained below Primary Containment Pressure Limit (Graph 13)	terminate sprays from sources external to the primary containment

7

WHILE PERFORMING THE FOLLOWING

IF	THEN
drywell sprays have been initiated AND BEFORE drywell pressure drops to 0 psig	terminate drywell sprays

BEFORE

drywell temperature reaches 280°F (Bulk)

PERFORM CONCURRENTLY
RC(A) point A

3

IF torus water level is below 197.5 in.
AND
drywell temperature and pressure are within the Drywell Spray Initiation Limit (Graph 8)

THEN trip recirc pumps and drywell cooling fans
AND
initiate drywell sprays per 34SO-E11-010-1S EXCEPT RHR pumps required for adequate core cooling by continuous injection in LPCI mode

NOTE 9
Drywell spray flow limits:
- 17,000 gpm per loop
- 11,500 gpm through the heat exchanger

NOTE 10
If DW sprays are throttled closed, and an increase in DW pressure occurs, then DW sprays must be considered secured. Conditions for initiating DW sprays must be met to resume DW sprays

WAIT UNTIL

drywell temperature CANNOT be maintained below 280°F (Bulk)

EMERGENCY DEPRESS IS REQUIRED

primary containment pressure CANNOT be maintained below 1.85 psig

WHILE PERFORMING THE FOLLOWING

IF	THEN
primary containment water level and torus pressure CANNOT be maintained below Primary Containment Pressure Limit (Graph 13)	terminate sprays from sources to the primary containment

WHILE PERFORMING THE FOLLOWING

IF	THEN
torus sprays have been initiated AND BEFORE torus pressure drops to 0 psig	terminate torus sprays

NOTE 3
Torus pressure is indicated on
- 1T48-PI-R632A (P657)
- 1T48-PI-R632B (P654)
- 1T48-PR-R608 (P657)
- 1T48-PR-R609 (P650)

BEFORE

torus pressure reaches 10 psig

3

IF torus water level is below 285 in.

THEN initiate torus sprays per 34SO-E11-010-1S EXCEPT RHR pumps required for adequate core cooling by continuous injection in LPCI mode

WHILE PERFORMING THE FOLLOWING

IF	THEN
drywell sprays have been initiated AND BEFORE drywell pressure drops to 0 psig	terminate drywell sprays

WAIT UNTIL

torus pressure is above 10 psig

3

IF torus water level is below 197.5 in.
AND
drywell temperature and pressure are within the Drywell Spray Initiation Limit (Graph 8)

THEN trip recirc pumps and drywell cooling fans
AND
initiate drywell sprays per 34SO-E11-010-1S EXCEPT RHR pumps required for adequate core cooling by continuous injection in LPCI mode

NOTE 9
Drywell spray flow limits:
- 17,000 gpm per loop
- 11,500 gpm through the heat exchanger

If DW spr
closed, ec
in DW pre
then DW
considere
Condition
DW spray
to resume

WAIT UNTIL

torus pressure CANNOT be maintained below Pressure Suppression Pressure (Graph 7)

EMERGENCY DEPRESS IS REQUIRED

BEFORE

torus pressure reaches Primary Containment Pressure Limit (Graph 13)

WHILE PERFORMING THE FOLLOWING

IF	THEN
torus is being vented AND more rapid depressurization of the primary containment is required to control containment pressure	perform the following:

GO TO point U on this sheet

Is torus water level below 300 in. — NO / YES

Vent torus per 31EO-EOP-101-1S irrespective of offsite radiological r
If necessary, defeat isolation interl

U

Is torus being vented — NO / YES

Vent drywell per 31EO-EOP-101-1S irrespective of offsite radiological release rate. If necessary, defeat isolation interlocks

Control containment pressure
Primary Containment Pressu
(Graph 13)

29. G2.4.43 001

A Fire has been reported by the Unit 1 EHC skid and the Fire Brigade has been dispatched.

Which ONE of the following describes how the Shift Supervisor maintains constant communications with the Fire Brigade from the Main Control Room?

A. A hand held radio dedicated to UHF Channel 1.

B. VHF base station dedicated to VHF Channel 2.

C. UHF base station dedicated to VHF Channel 1.

D. A hand held radio dedicated to VHF Channel 2.

References: LT-LP-10004 Rev. 03 pg 15 of 19.
LO LT-10004.008

A. Incorrect since hand held radios are not used in the Control Room.

B. Correct answer.

C. Incorrect answer since the base channel is VHF and uses Channel 2.

D. Incorrect since hand held radios are not used in the Control Room.

RO Tier:	T3	SRO Tier:	T3
Keyword:	COMMUNICATIONS	Cog Level:	MEM 2.8/3.5
Source:	N	Exam:	HT02301
Test:	C	Misc:	

123. G2.4.43 001

A Fire has been reported by the Unit 1 EHC skid and the Fire Brigade has been dispatched.

Which ONE of the following describes how the Shift Supervisor maintains constant communications with the Fire Brigade?

A. A hand held radio dedicated to UHF Channel 1.

B. VHF base station dedicated to VHF Channel 2.

C. UHF base station dedicated to VHF Channel 1.

D. A hand held radio dedicated to VHF Channel 2.

References: LT-LP-10004 Rev. 03 pg 15 of 19.
LO LT-10004.008

A. Incorrect since hand held radios are not used in the Control Room.

B. Correct answer.

C. Incorrect answer since the base channel is VHF and uses Channel 2.

D. Incorrect since hand held radios are not used in the Control Room.

RO Tier:	T3	SRO Tier:	T3
Keyword:	COMMUNICATIONS	Cog Level:	MEM 2.8/3.5
Source:	N	Exam:	HT02301
Test:	C	Misc:	

QUESTIONS REPORT
for HT2002

1. G2.4.43 001

A Fire has been reported by the Unit 1 EHC skid and the Fire Brigade has been dispatched. The Shift Supervisor maintains constant communications with the Fire Brigade using:

A. A hand held radio dedicated to UHF Channel 1.

B. VHF base station dedicated to VHF Channel 2.

C. UHF base station dedicated to VHF Channel 1.

D. A hand held radio dedicated to VHF Channel 2.

References: LT-LP-10004 Rev. 03 pg 15 of 19.
LO LT-10004.008

A. Incorrect since hand held radios are not used in the Control Room.

B. Correct answer.

C. Incorrect answer since the base channel is VHF and uses Channel 2.

D. Incorrect since hand held radios are not used in the Control Room.

h) If a loss of offsite power occurs and the diesels fail to tie the base station radios will not function. Personnel would still be able to use hand held radios.

LO 8

2) Fire Radio

A dedicated VHF base station for the Hatch Fire Brigade is located in the Control Room.

Channel 2 is the Fire Band. It is for fire emergency use only.

This system allows the Control Room to communicated directly with fire fighters.

f. Paging System

Note: The use of this system should be minimized to reduce plant background noise. Use phones if possible.

1) Speak slowly and deliberately in a normal tone of voice.

2) Do not attempt to broadcast over anyone which is already making an announcement. Chances are neither of you will be understood.

3) If a page broadcast of an emergency is being performed, security crossties the Simulator Building page and the plant page by positioning a switch in the Simulator Building Ventilation Room outside the Breakroom.

A switch in the Simulator Remote Shutdown Panel Room must also be manipulated to crosstie the Simulator Control Room page with the plant's paging system.

OBJECTIVES

LEARNING OBJECTIVES

1. Given a list of selections and AG-MGR-54-0592N, "Plant Communications," DETERMINE if communication standards are being met. (LT-10004.001)

2. Given a list of choices, SELECT an example of "Phonetic Clarification." (LT-10004.002)

3. DETERMINE the benefits of repeating back a communication and the importance of listening to repeat backs. (LT-10004.003)

4. Given a set of conditions, DETERMINE if the use of hand signals is the correct method for communication. (LT-10004.004)

5. Given a list of power supplies, SELECT the three potential sources of power to the plant phone system. (LT-10004.005)

6. Given a list of possibilities, CHOOSE the direct effect a loss of AC power would have on the sound powered phone system. (LT-10004.006)

7. Given a list of plant areas and 30AC-OPS-017-0S, "Use and Control of Portable Radios," DETERMINE if portable radio operation is allowed. (LT-10004.007)

8. Given a list, SELECT the portable radio channel reserved for fire emergencies. (LT-10004.008)

9. Given a list of plant conditions and 34SO-R51-001-0S, "Communication System," EVALUATE those conditions to determine if power would be available to the GAI-Tronics Paging System. (LT-10004.009)

*** Not Selected for Requal**

124. G2.4.47 001

The following conditions exist for Unit 2 at the indicated times:

	0200	0300	0400
Reactor Power	100%	85%	60%
Reactor Water Level	+37"	+37"	+35"
Drywell Pressure	1.3 psig	1.5 psig	1.7 psig
Torus Pressure	.9 psig	1.1 psig	1.2 psig
Torus Level	150"	137"	123"
Torus Temperature	85°F	85°F	86°F

Which ONE of the following indicates the status of the plant when the operator turns over to the next shift at 0700 if current trends continue as they are?

A. Reactor in Mode 3 with Drywell Sprays in progress.

B. Reactor in Mode 3 with a cooldown in progress at <100°F/hr.

C. HPCI operation is prevented and Emergency Depressurization has been initiated.

D. Recirc pumps and drywell cooling fans are tripped. Torus cooling and sprays are initiated.

References: PC-1 Primary Containment Control Rev. 4 Att. 1

A. Incorrect since drywell sprays are not initiated until you cannot stay below 11 psig torus pressure or 340°F Drywell temperature. Current trends do not come close to these limits.

B. Incorrect since an Emergency Depressurization is required prior to 0700 due to torus level <98 inches. This will exceed 100°F cooldown rate.

C. Correct answer due to lowering torus level. At 110 inches then HPCI is prevented from operation and at 98 inches the reactor is depressurized.

D. Incorrect since drywell coolers and recirc pumps are not directed to be tripped unless conditions noted in A above are met.

RO Tier:	T3	SRO Tier:	T3
Keyword:	TORUS LEVEL	Cog Level:	C/A 3.4/3.7
Source:	N	Exam:	HT02301
Test:	C	Misc:	TCK

16. G2.4.47 001

The following conditions exist for Unit 2 at the indicated times:

	0200	0300	0400
Reactor Power	100%	85%	60%
Reactor Water Level	+37"	+37"	+35"
Drywell Pressure	1.3 psig	1.5 psig	1.7 psig
Torus Pressure	.9 psig	1.1 psig	1.2 psig
Torus Level	150"	137"	123"
Torus Temperature	85°F	85°F	86°F

Which ONE of the following indicates the status of the plant when the operator turns over to the next shift at 0700 if current trends continue as they are?

A. Reactor in Mode 3 with Drywell Sprays in progress.

B. Reactor in Mode 3 with a cooldown in progress at <100°F/hr.

C. HPCI operation is prevented and Emergency Depressurization has been initiated.

D. Recirc pumps and drywell cooling fans are tripped. Torus cooling and sprays are initiated.

References: PC-1 Primary Containment Control Rev. 4 Att. 1

A. Incorrect since drywell sprays are not initiated until you cannot stay below 11 psig torus pressure or 340°F Drywell temperature. Current trends do not come close to these limits.

B. Incorrect since an Emergency Depressurization is required prior to 0700 due to torus level <98 inches. This will exceed 100°F cooldown rate.

C. Correct answer due to lowering torus level. At 110 inches then HPCI is prevented from operation and at 98 inches the reactor is depressurized.

D. Incorrect since drywell coolers and recirc pumps are not directed to be tripped unless conditions noted in A above are met.

Torus water level below 146 in.

Torus water temperature above 100 °F

Drywell pressure above 1.85 psig

WHILE PERFORMING THE FOLLOWING

IF PRIMARY CONTAINMENT FLOODING IS OR HAS BEEN REQUIRED | THEN exit the EOPs and enter the Severe Accident Guidelines

Go to SAGs

PERFORM CONCURRENTLY

ter

nd control torus water level
146 in. and 150 in. using:
for low water levels per
SO-E21-001-2S
IR for high water levels per
SO-E11-010-2S

WAIT UNTIL

torus water level
CANNOT be maintained
tween 146 in. and 150 in.

Is torus water level ow 146 in. or above 150 in.

ABOVE 150

NTLY

us water level
. per 34SO-E21-001-2S or
087-2S

WAIT UNTIL

torus water level
NNOT be maintained
above 110 in.

d prevent operation of HPCI
ctive of ... core cooling

vel

TLY

water level
per 34SO-E11-010-2S or
97-2S

WAIT UNTIL

torus water level
NOT be maintained
below 215 in.

rwell sprays
AND
ection into RPV from sources
imary containment EXCEPT
ired for:
ate core cooling
njection

WAIT UNTIL

orus water level
NOT be maintained
below 300 in.

nary c... water level
-105-2...

SP/T

3

Monitor and control torus water temperature below 100°F using available torus cooling per 34SO-E11-010-2S

WAIT UNTIL

torus water temperature CANNOT be maintained below 100°F

5

Operate ALL available torus cooling per 34SO-E11-010-2S EXCEPT RHR pumps required for adequate core cooling by continuous operation in LPCI mode

BEFORE

torus water temperature reaches BIIT curve limit (Graph 5)

PERFORM CONCURRENTLY
RC[A] point A

WAIT UNTIL

torus water temperature
AND
reactor pressure
CANNOT be maintained below
Heat Capacity Temperature Limit
(Graph 2)

EMERGENCY DEPRESS IS REQUIRED

DW/T

1

Monitor and control drywell temperature below 150°F using:
- Drywell cooling fans per 34SO-T47-001-2S
- Drywell chillers per 34SO-P64-001-2S

WAIT UNTIL

drywell temperature CANNOT be maintained below 150°F

NOTE 7
Refer to 34AB-B21-002-2S for water level corrections

Operate ALL available drywell cooling using:
- Drywell cooling fans per 34SO-T47-001-2S
- Drywell chillers per 34SO-P64-001-2S

If necessary defeat isolation interlocks per 31EO-EOP-100-2S

WHILE PERFORMING THE FOLLOWING

IF primary containment water level and torus pressure CANNOT be maintained below Primary Containment Pressure Limit (Graph 13) | THEN terminate sprays from sources external to the primary containment

7

WHILE PERFORMING THE FOLLOWING

IF drywell sprays have been initiated
AND
BEFORE drywell pressure drops to 0 psig | THEN terminate drywell sprays

BEFORE

drywell temperature reaches 340°F (Bulk)

PERFORM CONCURRENTLY
RC[A] point A

3

PC/P

1

Monitor and control containment pressure below 1.85 psig using:
- containment pressure control systems per 34SO-T48-002-2S
- SBGT per 34SO-T46-001-2S

WAIT UNTIL

primary containment pressure CANNOT be maintained below 1.85 psig

WHILE PERFORMING THE FOLLOWING

IF primary containment water level and torus pressure CANNOT be maintained below Primary Containment Pressure Limit (Graph 13) | THEN terminate sprays from sources external to the primary containment

7

WHILE PERFORMING THE FOLLOWING

IF torus sprays have been initiated
AND
BEFORE torus pressure drops to 0 psig | THEN terminate torus sprays

NOTE 3
Torus pressure is indicated on the following:
- 2T48-PI-R632A (P657)
- 2T48-PI-R632B (P654)
- 2T48-PR-R608 (P657)
- 2T48-PR-R609 (P650)

BEFORE

torus pressure reaches 11 psig

3

IF torus water level is below 285 in.

THEN initiate torus sprays per 34SO-E11-010-2S EXCEPT RHR pumps required for adequate core cooling by continuous injection in LPCI mode

7

WHILE PERFORMING THE FOLLOWING

IF drywell sprays have been initiated
AND
BEFORE drywell pressure drops to 0 psig | THEN terminate drywell sprays

WAIT UNTIL

torus pressure is above 11 psig

3

IF torus water level is below 215 in.
AND
drywell temperature and pressure are within the Drywell Spray Initiation Limit (Graph 8)

THEN trip recirc pumps and drywell cooling fans
AND
initiate drywell sprays per 34SO-E11-010-2S EXCEPT RHR pumps required for adequate core cooling by continuous injection in LPCI mode

NOTE 9
Drywell spray flow limits:
- 17,000 gpm per loop
- 11,500 gpm through the heat exchanger

NOTE 10
If DW sprays are throttled closed, and an increase in DW pressure occurs, then DW sprays must be considered secured. Conditions for initiating DW sprays must be met to resume DW sprays

WAIT UNTIL

torus pressure CANNOT be maintained below Pressure Suppression Pressure (Graph 7)

EMERGENCY DEPRESS IS REQUIRED

BEFORE

torus pressure reaches Primary Containment Pressure Limit (Graph 13)

WHILE PERFORMING THE FOLLOWING

IF torus is being vented
AND
more rapid depressurization of the primary containment is required to control containment pressure | THEN perform the following:

Torus water level above 150 in.

Primary containment hydrogen concentration above 2.5%

Torus water level below 146 in.

Torus water temperature above 100 °F

WHILE PERFORMING THE FOLLOWING

IF PRIMARY CONTAINMENT FLOODING IS OR HAS BEEN REQUIRED | THEN exit the EOPs and enter the Severe Accident Guidelines

PERFORM CONCURRENTLY

B

C

D

E

PC/G

GO TO ANY entry condition on PC-2

SP/L

NOTE 2
If fuel failure is suspected consult with Plant Chemistry prior to discharging water

Monitor and control torus water level between 146 in. and 150 in. using:
- CS for low water levels per 34SO-E21-001-2S
- RHR for high water levels per 34SO-E11-010-2S

WAIT UNTIL
torus water level CANNOT be maintained between 146 in. and 150 in.

Is torus water level below 146 in. or above 150 in.

BELOW 146

PERFORM CONCURRENTLY

Maintain torus water level above 98 in. per 34SO-E21-001-2S or 34GO-OPS-087-2S

WAIT UNTIL
torus water level CANNOT be maintained above 98 in.

PERFORM CONCURRENTLY RC[A] point A

EMERGENCY DEPRESS IS REQUIRED

Maintain torus water level above 110 in. per 34SO-E21-001-2S or 34GO-OPS-087-2S

WAIT UNTIL
torus water level CANNOT be maintained above 110 in.

Trip and prevent operation of HPCI irrespective of adequate core cooling

ABOVE 150

IF RCIC or HPCI is operating
THEN defeat high torus water level suction transfer logic per 31EO-EOP-100-2S

PERFORM CONCURRENTLY

Maintain torus water level below SRV Tail Pipe Level Limit (Graph 6) per 34SO-E11-010-2S or 34GO-OPS-087-2S

WAIT UNTIL
torus water level CANNOT be maintained below SRV Tail Pipe Level Limit (Graph 6)

PERFORM CONCURRENTLY RC[A] point A

WAIT UNTIL
torus water level
AND
reactor pressure
CANNOT be maintained below SRV Tail Pipe Level Limit (Graph 6)

"minate injection into RPV from sources nal to primary containment EXCEPT ems required for:
- adequate core cooling
- boron injection
- CRD

WAIT UNTIL
torus water level
AND
reactor pressure
CANNOT be restored and maintained below SRV Tail Pipe Level Limit

Maintain torus water level below 215 in. per 34SO-E11-010-2S or 34GO-OPS-087-2S

WAIT UNTIL
torus water level CANNOT be maintained below 215 in.

Terminate drywell sprays
AND
Terminate injection into RPV from sources external to primary containment EXCEPT systems required for:
- adequate core cooling
- boron injection
- CRD

WAIT UNTIL
torus water level CANNOT be maintained below 300 in.

Determine primary containment water level per 31EO-EOP-105-2S

SP/T

3

Monitor and control torus water temperature below 100°F using available torus cooling per 34SO-E11-010-2S

WAIT UNTIL
torus water temperature CANNOT be maintained below 100°F

5

Operate ALL available torus cooling per 34SO-E11-010-2S EXCEPT RHR pumps required for adequate core cooling by continuous operation in LPCI mode

BEFORE
torus water temperature reaches BIIT curve limit (Graph 5)

PERFORM CONCURRENTLY RC[A] point A

WAIT UNTIL
torus water temperature
AND
reactor pressure
CANNOT be maintained below Heat Capacity Temperature Limit (Graph 2)

EMERGENCY DEPRESS IS REQUIRED

DW/T

1

Monitor and control drywell temperature below 150°F using:
- Drywell cooling fans per 34SO-T47-001-2S
- Drywell chillers per 34SO-P64-001-2S

WAIT UNTIL
drywell temperature CANNOT be maintained below 150°F

NOTE 7
Refer to 34AB-B21-002-2S for water level corrections

Operate ALL available drywell cooling using:
- Drywell cooling fans per 34SO-T47-001-2S
- Drywell chillers per 34SO-P64-001-2S

If necessary defeat isolation interlocks per 31EO-EOP-100-2S

WHILE PERFORMING THE FOLLOWING

IF primary containment water level and torus pressure CANNOT be maintained below Primary Containment Pressure Limit (Graph 13) | THEN terminate sprays from sources external to the primary containment

7

WHILE PERFORMING THE FOLLOWING

IF drywell sprays have been initiated
AND
BEFORE drywell pressure drops to 0 psig | THEN terminate drywell sprays

BEFORE
drywell temperature reaches 340°F (Bulk)

IF primary contain
and torus prese
maintained belo
Pressure Limit (

IF torus sprays have
AND
BEFORE torus pre

IF drywell sprays ha
AND
BEFORE drywell

NOTE 9
Drywell spray flow limits:
- 17,000 gpm per loop
- 11,500 gpm through the heat exchanger