Florida Power & Light Company, 6501 South Ocean Drive, Jensen Beach, FL 34957

FPL

November 21, 2002

L-2002-233
10 CFR 50.4
10 CFR 50.54 (f)

U. S. Nuclear Regulatory Commission
Attn: Document Control Desk
Washington, DC 20555

RE: St. Lucie Units 1 and 2
Docket Nos. 50-335 and 50-389
Reactor Pressure Vessel Head (RPVH) Inspection
NRC Bulletin 2002-02 Supplemental Response

On August 9, 2002, the NRC issued Bulletin (NRCB) 2002-02, *Reactor Pressure Vessel Head and Vessel Head Penetration Nozzle Inspection Programs*. NRCB 2002-02 requested that inspection results be provided within 30 days of plant restart. NRCB 2002-01 also had a similar request for visual inspection results within 30 days of plant restart. Florida Power and Light Company (FPL) hereby provides the 30-day information request for inspection results set forth in the Bulletin with respects to St. Lucie Unit 1.

FPL has reviewed the results of the Unit 1 RPVH inspection and provides the following summary of the results. There were no indications of leakage, wastage, or cracking shown by any of the examination methods performed. The reduced examination coverage issues did not preclude the ability of FPL to assess the structural integrity of the RPVH or RPVH penetration nozzles.

Attachment 1 provides the information requested in NRCB 2002-02 within 30 days after plant restart following the St. Lucie Unit 1 fall 2002 refueling outage (SL1-18). In addition, Attachment 1 provides the additional information requested by the NRC staff during the series of conference calls with the NRC staff during the period of October 10-14, 2002. Attachment 2 provides a copy of plant condition reports (CR) 02-2149, 02-2439, and 02-2517. Attachment 3 provides proprietary and nonproprietary copies of WCAP-15945-P and WCAP-15945-NP, *Structural Integrity Evaluation of Reactor Vessel Upper Head Penetrations to Support Continued Operation: St. Lucie Unit 1*. Attachment 3 also includes the Westinghouse Application for withholding proprietary information from public disclosure for WCAP-15945-P.

Westinghouse Electric Company, LLC, has determined that the information contained in WCAP-15945-P is proprietary in nature. Therefore, it is requested that this document be withheld from public disclosure in accordance with the provisions of 10 CFR 2.790(a)(4). The Westinghouse reasons for the classification of this information as proprietary and the signed affidavit are included in Attachment 3. Although WCAP-15946-P, *Technical Basis for Repair Options for Reactor Vessel Upper Head*

A096

Penetration Nozzles and Attachment Welds (Proprietary), is also covered by the Westinghouse affidavit, it is not being submitted at this time.

The attached information is provided pursuant to the requirements of Section 182a of the Atomic Energy Act of 1954, as amended and 10 CFR 50.54(f).

Please contact us if there are any questions about this submittal.

Very truly yours,

Donald E. Jernigan
Vice President
St. Lucie Plant

DEJ/GRM

Attachments

STATE OF FLORIDA)
) ss.
COUNTY OF ST. LUCIE)

Donald E. Jernigan being first duly sworn, deposes and says:

That he is Vice President, St. Lucie Plant, for the Nuclear Division of Florida Power & Light Company, the Licensee herein.

That he has executed the foregoing document; that the statements made in this document are true and correct to the best of his knowledge, information, and belief, and that he is authorized to execute the document on behalf of said Licensee.

Donald E. Jernigan

STATE OF FLORIDA

COUNTY OF ST LUCIE

Sworn to and subscribed before me

this 21 day of November, 2002
by Donald E. Jernigan, who is personally known to me.

Name of Notary Public - State of Florida

GEORGE R. MADDEN
Notary Public - State of Florida
My Commission Expires Jun 17, 2004
Commission # CC931387

(Print, type or stamp Commissioned Name of Notary Public)

Attachment 1

NRC Bulletin 2002-02
Reactor Pressure Vessel Head and Vessel Head Penetration Nozzle
Post Inspection Response for St. Lucie Unit 1

NRC Bulletin 2002-02
Reactor Pressure Vessel Head and Vessel Head Penetration Nozzle
Post Inspection Response for St. Lucie Unit 1

On August 9, 2002, the NRC issued Bulletin (NRCB) 2002-02, *Reactor Pressure Vessel Head and Vessel Head Penetration Nozzle Inspection Programs*. The NRCB 2002-02 requested that inspection results be provided within 30 days of plant restart. NRCB 2002-01 also had a similar request for inspection results within 30 days of plant restart. Florida Power and Light Company (FPL) hereby responds to the 30-day information request for inspection results set forth in the Bulletin with respects to St. Lucie Unit 1.

NRC Request 2.: *Within 30 days after plant restart following the next inspection of the RPV head and VHP nozzles to identify the presence of any degradation, all PWR addressees are requested to provide:*

> *The inspection scope and results, including the location, size, extent, and nature of any degradation (e.g., cracking, leakage, and wastage) that was detected; details of the NDE used (i.e., method, number, type, and frequency of transducers or transducer packages, essential variables, equipment, procedure and personnel qualification requirements, including personnel pass/fail criteria); and criteria used to determine whether an indication, "shadow," or "backwall anomaly" is acceptable or rejectable.*
>
> *The corrective actions taken and the root cause determinations for any degradation found.*

FPL Response to NRC Request 2.A:

1. <u>Inspection Scope:</u> The following is a summary of the planned inspection scope as identified in the FPL response to NRC Bulletin 2002-02[1].

1.A. Visual Inspection Scope: The visual inspection (VT) scope for the St. Lucie Unit 1 reactor vessel (RV) head included 100% of the general area around the 78 reactor vessel head penetrations (RVHP) and the bare metal RV head. The inspection was performed using a video probe camera under the close fitting metal insulation. In the process of positioning the video probe to view the intersection of the 78 RVHPs, a large portion of the general areas between the penetration rows was viewed and recorded on videotape. As part of the preparation for the visual inspection, the head shroud was lifted and the insulation inside the shroud that surrounds the eight incore instrumentation (ICI) RVHPs was removed. The insulation from the head shroud down

[1] FPL letter L-2002-185, *St. Lucie Units 1 and 2, Docket Nos. 50-335, 50-389, Turkey Point Units 3 and 4, Docket Nos. 50-250 and 50-251, Response to NRC Bulletin 2002-02, Reactor Pressure Vessel Head Penetration Nozzle Inspection Programs*, R. S. Kundalkar to NRC, September 11, 2002.

to the RPV head flange was also removed for head detensioning, exposing a large portion of the RVH for direct visual viewing.

1.B. Ultrasonic Inspection Scope: The ultrasonic (UT) inspection scope of the 78 RVHP nozzle material included all of the 69 CEDMs, 8 ICIs and the head vent penetration tube locations. The examination scope was to include the material starting from approximately 2 inches above the weld down to the bottom end (to the maximum extent possible) of the respective penetration subject to limitations.

1.C. UT "Leak Path" Inspection Scope: A UT back reflection monitoring examination of the interference fit region above the weld was performed to determine if a reactor coolant leak has occurred into the annulus causing corrosion in the interference fit region. This UT technique is referred to as a "leak path" examination. This examination relies on good contact between the RVHP and RV head steel in the interference fit region for 360° and a sufficient height to show the absence of a leak path. The UT "leak path" is considered complementary to the "qualified" bare metal visual inspection that was performed on the top of the RV head.

1.D. Potential Limitations: Although the planned scope of the bare metal visual and UT examinations at St. Lucie Unit 1 was 100% of the RV head penetrations, several limitations were noted that could result in difficulty to perform 100% of the above scope. FPL had not previously performed a visual examination under the closely conforming metal insulation on the St. Lucie Unit 1 RV head, therefore, it was not known if physical restrictions existed that could limit some portion of the examinations. The configuration of the CEDM ID counterbore and the guide sleeve could result in limited inspection capabilities inside the CEDM penetration. At least one thermal sleeve was known to be bent and straightened during a prior outage that may result in a limitation for the gap scanning UT probe. It was also noted that the St. Lucie Unit 1 UT examination was the first use of a gap scanning probe on a CE designed unit with guide tube/thermal sleeves, which could result in some unforeseen interferences.

The extent of the limitations encountered are identified in the inspection results in Section 2 below:

2. <u>Inspection Results Summary:</u> There were no indications of leakage or cracking associated with the RVHPs and no evidence of wastage or degradation of the RV head steel shown by bare metal visual or the UT examination methods performed.

The only conditions discussed below are those where limitations resulted in incomplete coverage areas associated with the inspections. A detailed description of the inspection results, limitations encountered and the justification for acceptance is provided below.

2.A. Visual Inspection Results: No boric acid leakage coming from the RVHP at the RV head annulus, no boric acid accumulation or buildup on the RV head and no areas of wastage or degradation was observed during the inspection of the RV head. While

performing the visual inspections of the RVHPs, it is estimated that approximately 85% to 90% of the bare head surface area was viewed.

The visual inspection of the intersection of the 78 RVHPs with the bare metal head was broken down into quadrants for documentation. All four quadrants of each of the 78 penetration were reached for visual inspection. However, a limitation was noted on one quadrant of nozzle #2, and is discussed below. Since boric acid leakage is required for wastage of the RV head carbon steel to occur, FPL concluded, based on the lack of boric acid leakage or accumulation, that there was no wastage present on the St. Lucie Unit 1 RV head.

2.B. Visual Inspection Limitations: A limitation was noted in one quadrant of nozzle #2. The blanket ring of insulation that fills the gap between the RVHP and the close fitting metal insulation panels obstructed this quadrant. Several attempts were made to move the 2-inch thick insulation ring, but the best that could be obtained was a view of the intersection of the nozzle at the RV head at three complete quadrants and 50% of the 4th quadrant. While a 360° view at the intersection of the nozzle was not obtained around this nozzle at the intersection of the RV head, a large portion was viewed directly (~315°) and 360° was viewed just outside the insulation ring with no evidence of boric acid leakage, accumulation, or wastage. In addition to the insulation limitation noted for RVHP #2, light to moderate debris was noted at or near several of the RVHPs. The debris was characterized as paint chips, dust, or small construction items like wire, bolts, washers, etc. Swipe samples were taken of the dust particles around two different penetrations and the presence of boric acid residue was detected, but isotopic analysis confirmed that it was not from recent or active leakage. An air sample of the head area also detected low levels of asbestos. Condition Report (CR) #02-2439 was generated to further characterize the debris and to document the final disposition of whether the debris or insulation hindered the inspection. Some debris was removed and several locations were reevaluated or reinspected. A matrix of all the visual inspection results along with the reevaluation notations is shown in Table 1. A summary of the visual results was also incorporated into a matrix of all inspection results shown in Table 2. FPL concluded in the CR that the RV head was clean enough to facilitate a meaningful exam and the examination results support the conclusion that the RV head was free of wastage or RVHP leakage. In addition, based on the large area observed around nozzle #2, there is reasonable assurance that no wastage or leakage has occurred at that location.

Based on the results of the visual examination, with no evidence of boric acid leakage or accumulation, FPL concluded that no wastage has occurred of the RV head that would reduce the integrity and ability to perform its pressure retaining function.

2.C. UT Inspection Results: All 78 RVHPs were inspected with the UT inspection technique with no indications or flaws recorded in any of the nozzle exam areas that were scanned. UT coverage limitations were noted that prohibited the collection of UT data in portions of several nozzles. CR 02-2149 documents the inspection coverage issues and assesses the significance of the areas of missing inspection coverage.

2.D. UT Inspection Coverage Limitations: Many of the RVHPs have identified areas of limited coverage due to issues related to maintaining surface contact between the blade UT probe and the penetration surface (lift off). The regions of limited coverage have been localized primarily to the weld region and/or the nozzle material below the weld and are generally located on the downhill side of the nozzle penetration. Figure 1 is an illustration of the coverage obtained for a typical nozzle examination. Contact between the probe and examination surface is affected by the gap between the guide sleeve and the nozzle penetration ID surface, and by the delivery method of the blade UT probe into the gap. The blade UT probe is delivered into the gap between the guide sleeve and the nozzle penetration by flexing the probe around the guide funnel that is in close proximity to the CEDM penetration. Figure 2 is an illustration of the double bend path of the UT blade probe. The blade probe is designed to fit a nominal gap size and has compliance built in for slight variations in the sleeve centering. This compliance allows for the probe to be inserted into a range of gap sizes to compensate for guide sleeve positioning. However, if the guide sleeve is offset to one side of the nozzle and provides a gap that exceeds the tolerance of the probe compliance, contact with the examination surface will not be maintained. Normal weld shrinkage stresses at the nozzle ID surface in the weld region adds to the surface contact issue. The combination of these conditions and the double bend path explains the lift off encountered at the lower portion of the nozzle and the excellent UT coverage at the weld root and above.

The guide sleeves cannot be moved to adjust the gap between the sleeve and the nozzle penetration. Initially, additional scans were performed in an attempt to provide more coverage of the examination area. Also, slower probe speeds, additional couplant, and different probe designs were tried. The rescans were unsuccessful in providing additional coverage of the examination area. It is the inspection vendor's position that the data supplied is the best that could be provided using blade probes.

A review of the areas of loss of inspection coverage to evaluate its significance was performed. The inspection coverage was separated into four distinct regions for evaluation. Those regions include the area above the weld root, the area at/adjacent to the root, the nozzle area adjacent to the weld, and the area below the weld. A matrix of the UT inspection weld coverage is shown in Table 2.

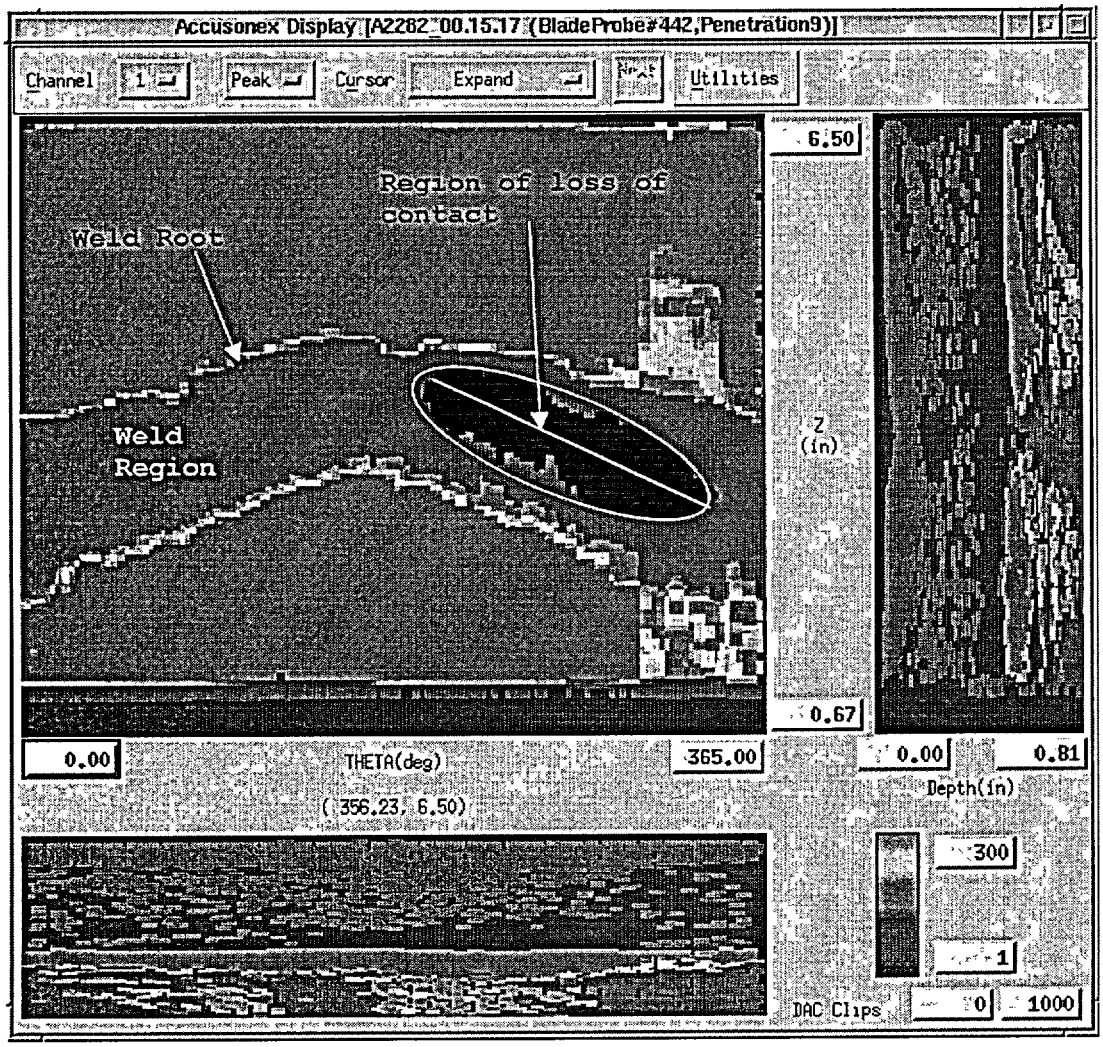

Figure 1: Typical UT Scan Showing Lack of Coverage Area in the Nozzle Material Adjacent to the Weld.

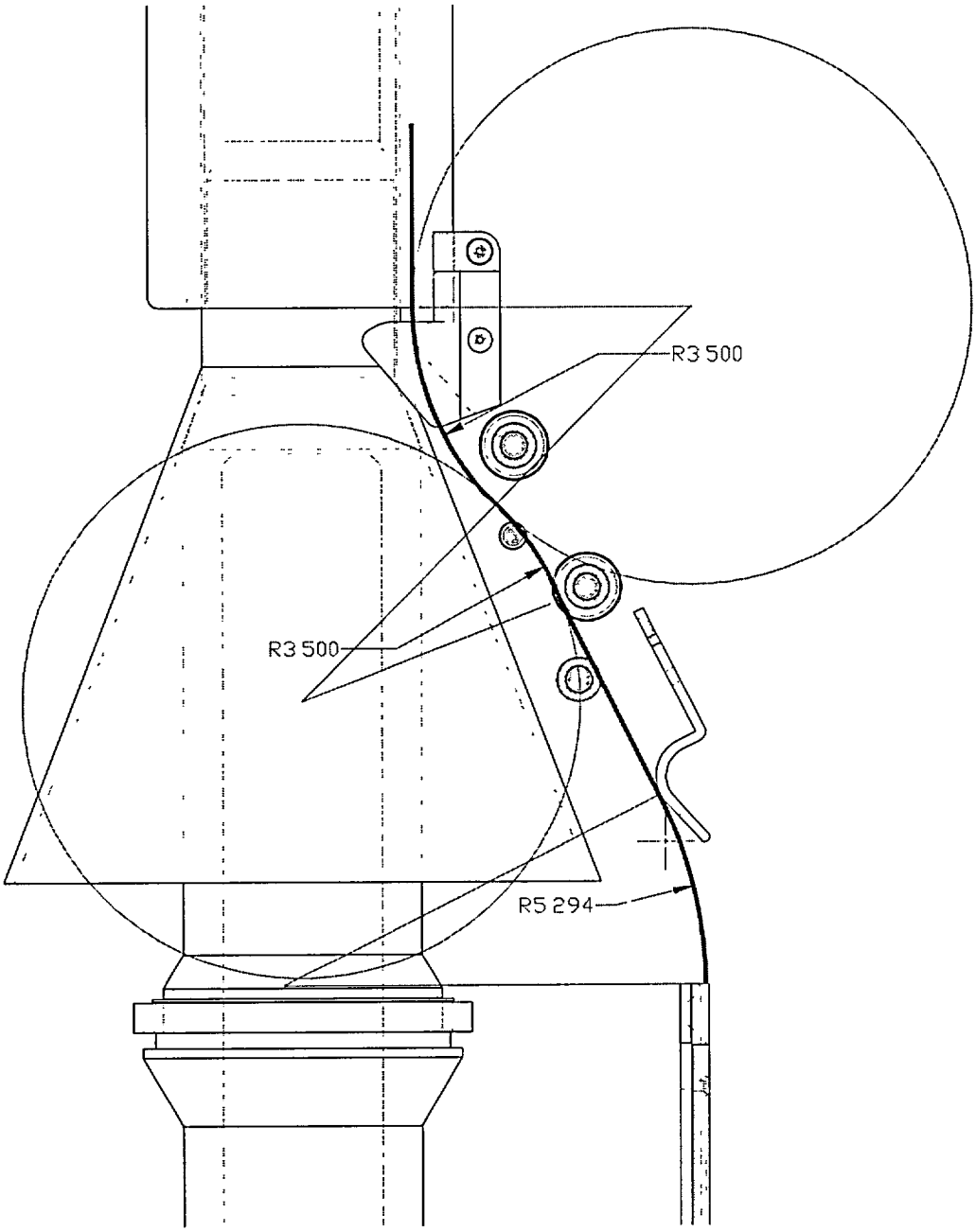

Figure 2: UT Blade Probe Path to Inspect the St. Lucie Unit 1 CEDM
(Dimensions are in inches)

St. Lucie RPV Head Inspection - October 2002

Legend	1 = light to no debris	2 = medium debris	3 = heavy debris	4 = identified part/parts	5= boron leakage - penetration	6 = boron leakage-above
NOZZLE #	Quad "A"	Quad "B"	Quad "C"	Quad "D"	Video	COMMENTS
1	1	2	2	1	SAT	
2	2	2	1	1,4	See CR02-2439	4) Insulation, Partial (50%) quadrant 'D' (see video), 'A', 'B' and 'C' are SAT
3	1	2	1	2	SAT	
4	1	1	1	1	SAT	Clear line (of sight) with closer view on video, No interference
5	2	4	2,6	2	SAT	4) Tie wire, No interference, 6) no evidence of leakage at RVHP to head interface, leakage from above nozzle
6	2	2	1	1	SAT	
7	1	1	2	1	SAT	No interference
8	1	1	1	2,4	SAT	4) Tie wire, Clearer view seen on video, No interference
9	1	1	2	2	SAT	
10	1	1	1	1	SAT	
11	1	1	1	1	SAT	
12	1	1	2	1	SAT	
13	2	1	1	1	SAT	
14	1	2	2	1	SAT	
15	2	2	1	1	SAT	
16	2	1	2	1	SAT	
17	1	1	1	1	SAT	
18	2	1	1	1	SAT	
19	1	1	1	1	SAT	
20	2	2	1	1	SAT	No debris - penetration stain, No interference
21	1	2	2	1	SAT	reverified SAT on video, No interference
22	1	2	2	1,4	SAT	4) O-ring No interference noted, No interference
23	1	1	1	1	SAT	
24	1	1	1	2	SAT	
25	2	2	1	1	SAT	Video quality good, No interference
26	1	1	1	1	SAT	
27	1	1,4	1	1	SAT	4) Paper No obstruction, No interference
28	1	1	2	1,4	SAT	4) Paper Paper not obstructing view on video, No interference
29	1	1	1	1	SAT	
30	1	1	2	1	SAT	
31	1	1	1	2	SAT	
32	1	1	2	2	SAT	Chips, No interference
33	2	1	2	1	SAT	Good video quality, no interference
34	1	2,4	1	1	SAT	4) Paper chips - No interference
35	1	1	2	1	SAT	No evidence of masking by debris, no interference
36	1	1	1	1	SAT	
37	1	1	1	1	SAT	
38	1	1	1	1	SAT	

Table 1: St. Lucie Unit 1 (SL1-18) RVPH Visual Inspection Matrix (Page 1 of 2)

St. Lucie RPV Head Inspection - October 2002

Legend	1 = light to no debris	2 = medium debris	3 = heavy debris	4 = identified part/parts	5= boron leakage - penetration	6 = boron leakage-above
NOZZLE #	Quad "A"	Quad "B"	Quad "C"	Quad "D"	Video	COMMENTS
39	1	1	1	1	SAT	
40	1	1	1	1	SAT	
41	1	1	1	1	SAT	
42	1	1	1	1	SAT	
43	1	1	1	1	SAT	
44	1	1	2	1	SAT	No interference
45	1	2	1	1	SAT	
46	1	1	1	1	SAT	
47	1	1	2	1	SAT	
48	2	1	1	1	SAT	
49	1	1	1	1	SAT	
50	1	1	1	1	SAT	
51	1	2	1	1	SAT	No interference
52	1	2,4	1,4	1	SAT	4) Washer, paper, No interference
53	1	2	1	1	SAT	4) Paper, No interference
54	1	1	1	2,4	SAT	4) Paper, No interference
55	1	1	2	2	SAT	
56	2	1	1	2	SAT	
57	1,4	2	1	1	SAT	4) Paper, No interference
58	2,4	1	1	2,4	SAT	4) Lock washer, No interference
59	1	2	1	1	SAT	
60	1	1	1	1	SAT	
61	1	2	1	1	SAT	
62	1	2,4	2	1	SAT	4) Bolt (Removed)
63	1	1	2	1	SAT	
64	1	2,4	2,4	1	SAT	4) Paper 4) washer, No interference
65	1	1	2,4	2,4	SAT	4) Paint chips 4) Paint chips, wire, No interference
66	1	1	1	2	SAT	
67	1	1	1	2	SAT	
68	1	1	1	1	SAT	
69	1	1	1	1	SAT	
70 ICI	1	2,4	2	2	SAT	4) Allen wrench REMOVED
71 ICI	1,4	1	1	1	SAT	4) Paper REMOVED
72 ICI	1	1	1	4	SAT	4) Insulation REMOVED, boron migrated to quadrant
73 ICI	4	1	1	4	SAT	4) Insulation chips REMOVED
74 ICI	4	4	1	1	SAT	4) Insulation chips REMOVED
75 ICI	1,4	1	2	1	SAT	4) socket REMOVED
76 ICI	2	1	1	2	SAT	
77 ICI	2	4	4	1	SAT	4) Insulation, paint chips REMOVED
Vent Line	4	2	2	4	SAT	4) Insulation, chips, No interference

Table 1: St. Lucie Unit 1 (SL1-18) RVPH Visual Inspection Matrix (Page 2 of 2)

Table 2: St. Lucie Unit 1 (SL1-18) RVHP UT and VT Inspection Coverage Matrix (Page 1 of 3)

CEDM	Extent of UT Coverage in RVHP Nozzle Material						Leak Path Data	VT Coverage	
Pen #	Min Distance Above Weld Root	Coverage Above Weld Root (Theta)	Coverage @ Weld Root (Theta)	Weld Region Coverage (Theta)	Below Weld Coverage (Theta)	Comments	Determination Possible?	VT Sat	VT Comments from CR02-2439
1	1.90	360	360	85	360	lack of coverage from 76 to 360	Yes	SAT	
2	1.60	336	336	285	336	lack of coverage in weld region @ 296-360	No	See CR02-2439	4) Insulation Partial (50%) quadrant 'D' (see video) 'A', 'B' and 'C' are SAT
3	3.27	360	360	265	360	lack of coverage from 102 to 177	Yes	SAT	
4	1.60	360	360	152	360	lack of coverage in weld from 208 to 360	No	SAT	Clear line with closer view on video, No interference
5	1.90	360	360	360	360		Yes	SAT	4) Tie wire, No interference
6	2.45	360	360	360	360		No	SAT	
7	1.97	360	360	360	360		Yes	SAT	No interference
8	1.60	360	360	218	360		No	SAT	4) Tie wire Clearer view seen on video, No interference
9	1.92	360	360	224	360	weld region lack of coverage from 199 to 336	Yes	SAT	
10	1.92	360	360	147	153	lack of coverage @ 0-81 & 228-360	No	SAT	
11	2.06	360	286	165	264	lack of coverage @ 0-90 & 255-360	Yes	SAT	
12	1.96	360	360	30	148	lack of coverage @ 0-162 & 191-360	No	SAT	
13	2.10	360	360	179	215	lack of coverage @ 0-88 & 267-360	No	SAT	
14	1.76	360	280	138	194	lack of coverage @ 0-82 & 220-360	No	SAT	
15	1.90	360	360	132	225	lack of weld coverage @ 0-98 & 230-360	No	SAT	
16	2.13	360	360	235	203	lack of coverage @ 0-69 & 304-360	No	SAT	
17	7.80	360	360	360	360	Rotating UT Data-guide sleeve removed	Yes	SAT	
18	1.99	360	360	117	196	lack of coverage @ 0-87 & 204-360	Yes	SAT	
19	1.13	360	360	118	169	lack of coverage @ 0-125 & 243-360	No	SAT	
20	1.99	360	360	121	175	lack of coverage @ 0-113 & 234-360	No	SAT	No debris - penetration stain, No interference
21	1.95	360	360	118	140	lack of coverage @ 0-115 & 233-360	No	SAT	reverified SAT on video, No interference
22	2.17	360	360	195	215	lack of coverage @ 0-47 & 242-360	No	SAT	4) O-ring No interference noted, No interference
23	2.17	360	360	270	270	lack of coverage @ 0-90	Yes	SAT	
24	1.77	360	360	194	218	lack of coverage @ 0-96 & 290-360	No	SAT	
25	1.78	360	360	140	154	lack of coverage @ 0-99 & 239-360	No	SAT	Video quality good, No interference
26	1.66	360	360	124	194	lack of coverage @ 0-93 & 217-360	Yes	SAT	
27	1.43	360	360	134	134	lack of coverage @ 0-138 & 272-360	No	SAT	4) Paper No obstruction, No interference
28	1.35	360	360	183	183	Rescan - Limited regions @ 0-75 & 258-360	No	SAT	4) Paper Paper not obstructing view on video, No interference
29	2.16	360	360	180	153	lack of coverage @ 0-69 & 249-360	No	SAT	
30	2.08	360	360	192	192	lack of coverage @ 0-81 & 273-360	Yes	SAT	

Table 2: St. Lucie Unit 1 (SL1-18) RVHP UT and VT Inspection Coverage Matrix (Page 2 of 3)

CEDM	Extent of UT Coverage in RVHP Nozzle Material						Leak Path Data	VT Coverage	
Pen #	Min Distance Above Weld Root	Coverage Above Weld Root (Theta)	Coverage @ Weld Root (Theta)	Weld Region Coverage (Theta)	Below Weld Coverage (Theta)	Comments	Determination Possible?	VT Sat	VT Comments from CR02-2439
31	1 66	360	360	217	205	lack of coverage @ 0-96 & 313-360	No	SAT	
32	2 00	360	360	168	190	lack of coverage @ 0-96 & 288-360	No	SAT	Chips, No interference
33	1 90	360	275	145	145	lack of coverage @ 0-81 & 226-360	No	SAT	Good video quality, no interference
34	1.77	360	360	105	160	lack of coverage @ 0-72 & 177-360	No	SAT	4) Paper chips - No interference
35	1 96	360	360	140	155	lack of coverage @ 0-89 & 229-360	No	SAT	No evidence of masking by debris, no interference
36	2 13	360	360	141	177	lack of coverage @ 0-121 & 262-360	No	SAT	
37	1 92	360	360	139	139	lack of coverage @ 0-115 & 254-360	No	SAT	
38	1.80	290	290	130	173	lack of coverage @ 0-88 & 216-360	No	SAT	
39	1.98	360	360	133	130	lack of coverage @ 0-130 & 263-360	Yes	SAT	
40	1 27	360	360	202	182	lack of coverage @ 0-67 & 269-360	No	SAT	
41	1 94	360	360	207	181	lack of coverage @ 0-90 & 297-360	No	SAT	
42	2 00	360	360	143	217	lack of coverage @ 0-96 & 239-360	Yes	SAT	
43	1.88	360	360	121	174	lack of coverage @ 0-121 & 242-360	Yes	SAT	
44	1.34	360	360	157	166	lack of coverage @ 0-130 & 287-360	No	SAT	No interference
45	2.30	360	360	143	159	lack of coverage @ 0-128 & 271-360	No	SAT	
46	2 25	360	360	188	188	lack of coverage @ 0-81 & 253-360	No	SAT	
47	2.37	360	285	134	134	lack of coverage @ 0-127 & 261-360	Yes	SAT	
48	1 70	360	360	360	319	below weld coverage limited from 0-41	Yes	SAT	
49	2 21	360	360	134	134	lack of coverage @ 0-114 & 248-360	Yes	SAT	
50	2 66	360	360	148	203	lack of coverage @ 0-93 & 241-360	Yes	SAT	
51	2 09	360	360	145	209	lack of coverage @ 0-84 & 229-360	No	SAT	No interference
52	2.50	360	360	177	294	lack of coverage @ 0-90 & 267-360	Yes	SAT	4) Washer, paper, No interference
53	2.50	360	360	152	145	lack of coverage @ 0-100 & 252-360	No	SAT	4) Paper, No interference
54	2 20	360	360	209	190	lack of coverage @ 0-99 & 308-360	No	SAT	4) Paper, No interference
55	1.10	360	360	360	360		No	SAT	
56	1 65	360	360	223	199	lack of coverage @ 0-93 & 316-360	No	SAT	
57	2 80	360	360	153	160	lack of coverage @ 0-115 & 268-360	No	SAT	4) Paper, No interference
58	1.00	360	360	150	170	lack of coverage @ 0-112 & 261-360	Yes	SAT	4) Lock washer, No interference
59	1 81	360	360	138	185	lack of coverage @ 0-119 & 257-360	No	SAT	
60	0.87	360	360	239	360	weld region lack of coverage 0-83 & 281-319	No	SAT	
61	0 66	360	360	244	360	weld region lack of coverage 0-67 & 280-329	No	SAT	
62	1.80	360	360	177	188	lack of coverage @ 0-103 & 280-360	Yes	SAT	4) Bolt (Removed)
63	1 92	360	360	204	204	lack of coverage @ 0-83 & 287-360	No	SAT	
64	2 07	360	360	156	188	lack of coverage @ 0-88 & 276-360	No	SAT	4) Paper 4) washer, No interference

CEDM	Extent of UT Coverage in RVHP Nozzle Material						Leak Path Data	VT Coverage	
Pen #	Min. Distance Above Weld Root	Coverage Above Weld Root (Theta)	Coverage @ Weld Root (Theta)	Weld Region Coverage (Theta)	Below Weld Coverage (Theta)	Comments	Determination Possible?	VT Sat	VT Comments from CR02-2439
65	1 76	360	360	178	167	lack of coverage @ 0-83 & 261-360	No	SAT	4) Paint chips 4) Paint chips, wire, No interference
66	1.42	360	360	360	360		No	SAT	
67	0 90	360	360	224	201	lack of coverage @ 0-77 & 301-360	No	SAT	
68	8 00	360	360	360	360	Rotating UT Data-guide sleeve removed	Yes	SAT	
69	1.90	360	360	175	204	lack of coverage @ 0-70 & 245-360	Yes	SAT	
70-ICI	4.33	360	360	360	N/A	Max. extent of exam achieved w/o limitations	Yes	SAT	4) Allen wrench REMOVED
71-ICI	4.30	360	360	360	N/A	Max. extent of exam achieved w/o limitations	Yes	SAT	4) Paper REMOVED
72-ICI	5 67	360	360	360	N/A	Max. extent of exam achieved w/o limitations	Yes	SAT	4) Insulation REMOVED, boron migrated to quadrant
73-ICI	4 20	360	360	360	N/A	Max. extent of exam achieved w/o limitations	Yes	SAT	4) Insulation chips REMOVED
74-ICI	3.35	360	360	360	N/A	Max. extent of exam achieved w/o limitations	Yes	SAT	4) Insulation chips REMOVED
75-ICI	4 80	360	360	360	N/A	Max. extent of exam achieved w/o limitations	Yes	SAT	4) socket REMOVED
76-ICI	3.76	360	360	360	N/A	Max. extent of exam achieved w/o limitations	Yes	SAT	
77-ICI	5 00	360	360	360	N/A	Max. extent of exam achieved w/o limitations	Yes	SAT	4) Insulation, paint chips REMOVED
Vent	1.90	360	360	360	N/A	Max. extent of exam achieved w/o limitations	N/A	SAT	4) Insulation, chips, No interference

Notes Below:

Pen #	
2	Lack of weld root coverage for 24 degrees due to obstuction on inside surface of nozzle
11	Lack of weld root coverage for 74 degrees due to poor blade probe coupling to inside surface of nozzle
14	Lack of weld root coverage for 80 degrees due to poor blade probe coupling to inside surface of nozzle
17 Blade	No Blade Probe UT Data due to Obstructions; Removing Thermal Sleeves for Rotating UT Probe
33	Lack of weld root coverage for 85 degrees due to poor blade probe coupling to inside surface of nozzle
38	Lack of weld root coverage for 70 degree due to obstuction on inside surface of nozzle
47	Lack of weld root coverage for 75 degrees due to poor blade probe coupling to inside surface of nozzle
68 Blade	No Blade Probe UT Data due to Obstructions. Removing Thermal Sleeves for Rotating UT Probe
Vent	The minimum distance inspected above the weld for the vent was corrected from 1.35" to 1 90" based on a letter from the vendor dated 10-17-02 and revised on 11-14-02
Multilple	Visual Note: 4 = Identified part/parts as reported in PSL-1 CR02-2439

Table 2: St. Lucie Unit 1 (SL1-18) RVHP UT and VT Inspection Coverage Matrix (Page 3 of 3)

2.E. UT "Leak Path" Inspection Results: A "leak path" examination was attempted on all penetrations with the exception of the vent, which is not installed with an interference fit. The "leak path" examination was successful in 8 ICIs and 23 CEDM penetrations. In the remaining 47 RVHPs the data collected was not sufficient to make a determination due to the lack of a clearly defined interference fit region. No leak paths were detected in the 31 RVHPs where the data was sufficient to make a determination. The results of the "leak path" are also provided in the inspection coverage matrix in Table 2.

2.F. UT "Leak Path" Limitations: The leak path technique involves the display of the amplitude profile from the nozzle backwall above the weld in the interference fit region. Leak path determination was not possible in 47 nozzles because the blade probe could not always access this area 360 degrees around the penetration above the weld or the scan height was not sufficiently above the interference fit region to determine if a leak path existed. Partial leak path is not considered a successful exam. It is also possible that the interference fit was looser than needed to provide a back wall reflection to make a leak path determination. If this is the cause, then the visual examination results are strongly supported.

3. Discussion and Justification for Acceptance of the Inspection Results: A discussion of issues identified with inspections plans versus actual results, as well as limitations with the examination, are identified below. The justification for accepting the results is also provided.

3.A. "Leak Path" Examination Was Not Accomplished on 47 Of 78 Penetrations: As identified in our inspection plan, the "Leak Path" inspection was a complement to the "qualified" visual results. Since the visual inspection was successful at 77 of 78 locations and 7/8 of the nozzle #2, failure to obtain data to make a determination of leak path at 47 penetrations has no impact on the ability to make a reasonable determination of integrity of the reactor vessel head.

3.B. Incomplete 360° UT Examination Results Were Reported in Some Penetrations: The scope of the examination was to perform a 360° volumetric examination from 2 inches above the J-groove weld down to the bottom of the RVHP, to the maximum extent possible. To evaluate the significance of the lack of inspection coverage, the inspection coverage data was broken into 4 distinct regions. Those regions include the area above the weld root, the area at or adjacent to the weld root, the nozzle area adjacent to the weld and below the weld root, and the area below the weld. A matrix of the UT inspection weld coverage, along with the visual and "leak path" results, was prepared to evaluate the inspection results and is shown in Table 2. A summary of the UT coverage result follows.

Area of UT Coverage	Number of Penetrations with 360° Coverage
Above the weld	76 of 78 exams
At the weld root	72 of 78 exams
In the area adjacent to the weld	17of 78 exams
Below the weld	14 of 69 (The 8 ICI & vent are not included in this total since the portion of the nozzle that extends below the head has a fillet weld on the OD surface or the nozzle is flush with the head surface.)

Table 3: Summary of the UT Coverage Results

The reason for the lack of coverage is addressed in Section 2.D above. To determine the significance of the lack of UT examination coverage, the effect of a postulated axial and circumferential flaw in the areas of missed coverage was evaluated in each of the four regions of inspection coverage identified above.

At the weld root and above the weld: The areas of prime interest because of the safety concern for nozzle ejection and LOCA are circumferential cracks located in the nozzle material at the weld root and above the weld. This is also the area that axial cracks would have to propagate to in order for a leak to occur through the RVHP nozzle material. The UT examinations of the RVHPs have provided coverage of the nozzle base material at the weld root and above the weld, (the safety significant region) for essentially 100% of the weld length for most nozzle penetrations. There are two RVHPs (#2 and 38) with less than 360° coverage above the weld but the coverage was 290° and 336°. There are six RVHPs (#2, 11, 14, 33, 48, and 47) with less than 360° coverage at the weld root with the coverage ranging from 275° to 336° (greatest lack of coverage being 85°). Based on a review of circumferential flaws detected to date by Framatome ANP, the coverage area obtained at St. Lucie Unit 1 provides reliable assurance that safety significant circumferential flaws at or above the weld root do not exist.

A flaw tolerance evaluation was performed postulating a circumferential flaw in the area of lack of coverage at the weld root and above using WCAP-15945-P[2]. The flaw is assumed to be the maximum circumferential length of the area of lack of coverage (85°). Figure 3 shows the time required for the postulated 85° flaw to grow to a point of structural significance (330°) to be 19.25 years of operation. Figure 3 is plotted as half the length of the circumferential flaw to account for both ends of the flaw to grow equally. The evaluation uses plant specific stresses and operating temperature and the MRP-55[3] crack growth rate predictions with a factor of two applied to account for

[2] "Structural Integrity Evaluation of Reactor Vessel Upper Head Penetrations to Support Continued Operation: St Lucie Unit 1," Westinghouse Electric Co. LLC, WCAP-15945-P Revision 1, November 2002.

[3] EPRI Document MRP-55, "Crack Growth Rates for Evaluating Primary Water Stress Corrosion Cracking (PWSCC) of Thick-Wall Alloy 600 Material," July 2002.

uncertainty. Based on the UT inspection results of no indications in the nozzle area examined at the weld root and above, and this evaluation, there are no concerns with the structural integrity of the RVHPs for over 19 years of operation. This conclusion postulates a circumferential crack in the missed coverage areas in the RVHP material at the weld root or above. The RVHPs will be reinspected with UT within 4 effective degradation years (EDY) not to exceed 10 EFPY and visually inspected at every refueling outage, based on the current MRP-75 recommended reinspection interval.

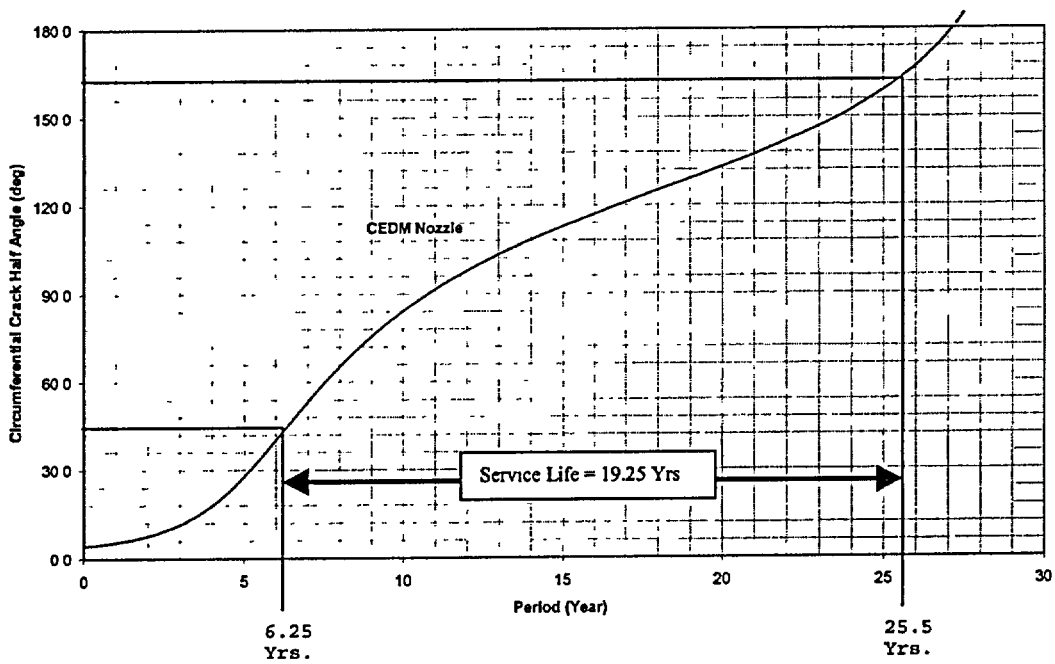

Figure 3: Crack Growth Predictions for an 85° Circumferential Through-Wall Flaw Near the Top of the Attachment Weld for CEDM Nozzles (This figure is based on Figure 6-21 from WCAP-15945-P with the MRP-55 factor of 2.0 included)

For an axial flaw in the area of non-coverage at the weld root or above, the significant event would be leakage followed by wastage and/or potential initiation of an OD circumferential flaw. There is no structural significance to an axial flaw, since the stresses to propagate an axial crack are not present above the weld in the interference fit region as detailed in WCAP-15945-P. Based on the UT inspection results of no indications in the nozzle area examined at the weld root and above and the acceptable bare metal visual examination results of no leakage or wastage of the RV head, there are no concerns with the structural integrity of the RVHPs that could be caused by axial cracking in the missed coverage areas in the RVHP material at the weld root or above.

In the area adjacent to the weld: For an axial or circumferential flaw in the area of non-coverage in the nozzle material adjacent to the weld (below the weld root), the

significant event would be (growth to a point of) leakage followed by wastage and/or potential initiation of an OD circumferential flaw. These effects are addressed by the UT for the circumferential flaws at the weld root and above and the performance of the VT. Based on the UT inspection results in the nozzle at the weld root and above and the VT results of no leakage or wastage of the RV head, there are no concerns with the structural integrity of the RVHPs that could be caused by cracking in the missed coverage areas in the RVHP material adjacent to the weld.

Below the weld: Axial flaws in the area of non-coverage in the nozzle material below the weld are of no structural significance, however, a postulated flaw could grow above the weld to the point of leakage followed by wastage and/or potential initiation of an OD circumferential flaw. These effects are addressed by the UT for the circumferential flaws at the weld root and above, and performance of the VT.

For a circumferential flaw below the weld, the potential for loose parts is a concern. The current proposed acceptance criteria for circumferential cracks below the weld are that they be limited to ¾ of the circumference (270°). Using 270° as the acceptance criteria, and postulating a 230° flaw equal to the worst area of lack of coverage below the weld, an evaluation similar to Figure 3 is performed. The starting point for a 230° flaw (115° half angle) is 15 years and the end point for a 270° flaw is 20.5 years making the service life 5.5 years. However, since the flaw is postulated below the weld in the normal RCS environment, the factor of two on crack growth rate applicable to OD flaws above the weld does not apply. Accordingly, the service life between inspection intervals for the postulated circumferential flaw is 11 years. The RVHPs will be reinspected with UT within 4 EDY (not to exceed 10 EFPY) based on the current MRP-75 recommended reinspection interval. Based on the UT inspection results of no indications in the nozzle area examined and the acceptable VT results of no leakage or wastage of the RV head, there are no concerns with the structural integrity of the RVHPs that could be caused by cracking in the missed coverage areas in the RVHP material below the weld.

3.C. Nozzle Penetration #2 Had Incomplete UT Test Results at the Root of the Weld and Above the Weld: Nozzle #2 was the only penetration that had incomplete visual results (1/8 of the circumference) and is addressed in 2.A. and 2.B. above. Based on the area observed at the intersection of the RVHP to RV head base metal in 7/8 of the circumference and 360° coverage area outside of the insulation collar there is reasonable assurance that this penetration was not leaking and no wastage was present. The missing UT data was a 24-degree segment for the entire height of the UT scan and a 75° segment in the area adjacent to the weld (Table 2). The largest structurally significant circumferential flaw that could be present is 24° and is bounded by the evaluation in Figure 3. Therefore, there is reasonable assurance that there is no structural integrity, leakage or wastage issue associated with this nozzle.

3.D. Two Guide Sleeves Were Bent Resulting in No UT Blade Probe Access: Since no UT data could be collected at RVHP #17 and #68, the guide funnel and sleeve assembly was removed at these two locations. Both RVHPs were inspected by UT

rotating probe with no lack of coverage areas, no indications recorded, and determinations that no "leak path" was present.

3.E. The UT Examination Distance Did Not Reach Approximately 2 Inches Above the Weld in All RVHPs As Identified in the Bulletin Response: The 2-inch value was chosen, at the request of the inspection vendor, to obtain data to support a "leak path" determination by inspecting in the area of the RVHP interference fit in the RV head. Typically only 1 inch above the weld is inspected for flaws in the tube material. The minimum distance above the weld root for each UT inspection is identified in the matrix in Table 2. All 8 ICIs and 24 of the 69 CEDMs were scanned to a distance of ≥2 inches. The distance examined above the weld is reported in Table 2 as a minimum distance and is applicable to the uphill side of the weld, since the scan height from the bottom of the nozzle was generally at the same height 360° around the penetration. In the St. Lucie Unit 1 structural integrity evaluation, WCAP-15945-P, Section 6, the crack growth predictions drastically diminish with diminishing stresses immediately above the weld. Crack growth predictions are not even calculated at a distance greater than 1 inch above the weld on the uphill side of the nozzle (except for RVHP #1 the 0° RVHP, which is calculated to 1.2 inches in WCAP Figure 6-12), due to the interference fit region and the reduced stresses away from the weld. Therefore, flaws are not predicted to initiate or grow above approximately 1 inch above the weld, and inspections above 1 inch above the weld are not required for flaw detection. All but three RVHPs (#60, 61, & 67) were inspected to a height of ≥1 inch on the uphill side of the weld. However, RVHPs #60, 61 and 67 had 360° UT coverage at and above the weld for a minimum distance of 0.66 inches to 0.90 inches. Approaching the downhill side on these nozzles the inspection coverage was significantly >1 inch above the weld (see Figure 1 for a typical nozzle). These 3 RVHPs are high hillside locations, inserted into the head at a 42.5° angle. It is reasonable to conclude, based on the stresses, that any safety significant circumferential flaw would be in close proximity to the weld root and would be detected in the area examined. Based on the plant specific evaluations for the RVHPs in WCAP-15945-P, the distance inspected above the weld includes the highly stressed region that could potentially develop a safety significant flaw.

4. Conclusions:

- There were no indications of leakage, wastage or cracking shown by any of the examination methods performed.

- The reduced examination coverage issues do not preclude FPL's ability to assess the structural integrity of the reactor vessel head.

5. Non Visual NDE Details:

5.A. Methods and Equipment: Automated ultrasonic (UT) examinations of 69 CEDM nozzles, 8 ICI nozzles, and 1 vent line nozzle were performed using the ACCUSONIX™ automated data acquisition and analysis system. The CEDM and vent line nozzle examinations were conducted from underneath the RV head. The ICI nozzle

examinations were conducted from the top of the RVH. A blade UT probe tool was utilized to perform inspections of CEDM nozzles 1 through 16, 18 through 67, and 69. CEDM nozzles 17 and 68 were examined using a rotating UT inspection probe after removal of the guide sleeves from underneath the RV head. Additionally, the vent line was examined using a rotating inspection probe. The eight ICI nozzles were inspected from above the RV head utilizing a "top-down" rotating UT inspection tool.

5.B. Number and Type of Transducers:
CEDM blade probe examinations: Examinations were performed utilizing a circumferential "blade probe" consisting of two elements in a pitch/catch configuration. The blade probe was configured for forward scatter time of flight diffraction (TOFD), to produce an ultrasonic wave oriented in the axial direction.

CEDM/ICI bore probe examinations: Examinations were performed utilizing a rotating transducer head that holds ten separate transducers. The probe head consisted of a 0-degree transducer and nine pitch/catch search units. Search units two through six were the primary transducers that were demonstrated for the detection and sizing of axial and circumferential flaws. Search units 7 through 10 are designed to provide supplemental coverage of flaws detected with the initial detection transducers if this type of data is necessary to fully evaluate flaws detected with the initial detection search units.

Vent line bore probe examination: Examination was performed using a rotating transducer head that houses five pulse echo transducers. The transducer head consisted of a 0-degree transducer, two opposing axially directed transducers and two opposing circumferentially directed transducers.

5.C. Essential Variables of UT Equipment: Essential variables for the examination system are as defined by the MRP Inspection Committee/EPRI NDE Center Protocol, dated July 17, 2002. These essential variables, including the frequency of transducers, are located within the specific procedure used for the examination.

Essential variables for the blade probe and rotating probe examinations are contained within Framatome procedure 54-ISI-100-09. Essential variables for the vent line bore probe examination are contained within Framatome procedure 54-ISI-137-00 with Change Authorization CA#'s FRA-02-012 and STL-02-001.

The proprietary UT procedures with the essential variables have been submitted under separate cover letters[4,5] by the vendor, Framatome ANP, along with the 10CFR 2.790 (b) affidavit.

---

[4] Framatome ANP Letter NRC:02:056, "Procedures for the Conduct of Ultrasonic Examinations of Reactor Vessel Head Penetrations," James F. Mallay (FRA-ANP) to NRC Document Control Desk, November 11, 2002.

[5] Framatome ANP Letter NRC:02:057, "Change Authorizations to Procedures for the Conduct of Ultrasonic Examinations of Reactor Vessel Head Penetrations," James F. Mallay (FRA-ANP) to NRC Document Control Desk, November 15, 2002.

5.D. Procedure Qualification Requirements: A qualification program similar to the ASME Section XI, mandatory Appendix VIII, "Performance Demonstration for Ultrasonic Examination Systems," does not exist for UT examination of the CRDM nozzle base material. However, as part of the EPRI MRP, Framatome ANP participated in a demonstration of the UT techniques used for detection of axial and circumferentially oriented flaws in the RPV head penetration tube material. The demonstration involved scanning flawed mockups to prove that the axial and circumferential transducers are capable of detecting cracking in CRDM nozzles. Examinations of various field removed samples and manufactured mockups containing cracks of various sizes and orientations were used to demonstrate the capabilities of the techniques employed. These techniques and capabilities were demonstrated in blind testing that was attended by NRC reviewers.

The "leak path" UT technique is Framatome ANP proprietary technology that has no formal qualification program. The basis of the "leak path" UT technique qualification is from empirical data obtained from the UT examination of approximately 270 CRDM/CEDM nozzle penetrations. In examinations of VHPs since March 2001 with known bare metal visual leakage where the interference fit has been scanned, a UT "leak path" has been observed. Framatome has presented the "leak path" UT technique to the NRC for review on several occasions. The technical basis of this technique is described in a Framatome ANP proprietary document entitled, *Reactor Vessel Head Penetration Leak Path Qualification Report*, dated February 6, 2002. For additional specific information regarding the "leak path" technique, refer to the NRCB 2002-02 FPL response[1].

5.E. Personnel Qualification Requirements: Personnel performing calibration or data analysis functions in accordance with procedures utilized for the examinations were required to be qualified to a minimum of Level II in ultrasonic examination, in accordance with the vendors written certification program. Additionally, to be considered qualified to perform RHP UT data analysis, personnel were required to attend a minimum of 16 hours of training on reactor head penetration (RHP) examination techniques, score at least 80% on a written examination containing a minimum of 25 questions covering information in the training program, and pass a data analysis practical examination applying the requirements of the examination procedure. A detection rate of 80% of the flaws within the data test set and a maximum false call rate of 20% was necessary for the analyst to successfully demonstrate their ability to perform data analysis. The proprietary document describing the Data Analysis Training Program has been submitted under separate cover letter[4] by the vendor, Framatome ANP, along with the 10CFR 2.790 (b) affidavit.

5.F. Criteria For Determining if a Shadow or Backwall Anomaly is Acceptable: No shadow or backwall anomaly indications were identified, therefore, no indications were evaluated.

FPL Response to NRC Request 2.B: Since no degradation was identified during the St. Lucie Unit 1 RVHP and bare metal inspection, no corrective action or root cause determinations were required.

6. Additional Requests for Information

During conference calls with the NRC regarding the RVHP inspection status at St. Lucie Unit 1 on October 10-14, 2002, additional requests for information (RAI) were made. The RAIs were documented in the NRC summary of conference calls dated November 13, 2002[6]. The following is the response to the RAI's relative to St. Lucie Units 1 and 2.

NRC RAI Number 1: *As a result of recent inspection findings, the NRC has concerns about the combination and scope of inspection methods used during RPV head and VHP nozzle inspections implemented in response to Bulletin 2002-02. The concern is that through-weld cracks in the J-groove welds may provide the conditions that could lead to circumferential cracking in the nozzle base material at or above the J-groove weld with no visual indications of leakage deposits on the RPV head.*

North Anna 2 has identified circumferential cracks in nozzles examined with UT and indications were identified on the J-groove weld of a high percentage of the penetrations. According to the licensee for North Anna, there were no visual indications of boric acid deposits on the surface of the RPV head at all of these nozzles. This finding, if verified, indicates that cracks in the J-groove welds may provide the conditions that could lead to circumferential cracking in the nozzle base material at or above the J-groove weld with no visual indications of leakage deposits on the surface of the RPV head.

Considering the discussion above, include a written discussion of whether the findings at North Anna 2 alter your justification for continued reliance on visual examinations and the decision not to directly examine the J-groove welds.

Response to RAI Number 1: The examination plan identified in the FPL response for St. Lucie Unit 1 and Unit 2 to Bulletin 2002-02[1], relies on performing both visual inspections on top of the RV head and UT of RVHP nozzle material. The significance of the weld metal cracking is that it can lead to pressure boundary leakage and ultimately wastage of the RV head, if left undetected for a significant period of time. Also, as stated in the RAI, weld metal cracking could lead to wetting of the back side of the RVHP and initiation of a circumferential flaw. By performing the visual inspection on top of the RV head, the safety concern with pressure boundary leakage and the associated wastage of the RV head steel that can occur is addressed. By performing the UT inspection of the RVHP tube material at or above the J-groove weld the potential for a circumferential flaw to exist in the RVHP nozzle material at St. Lucie Unit 1 is eliminated. This issue will also be addressed for St. Lucie Unit 2 since the same UT

[6] NRC Letter, *Summary of Conference Calls With Florida Power And Light Regarding Reactor Vessel Head Inspection Results (TAC NO. MB5917)*, Brendan T. Moroney (NRC) to Florida Power and Light, November 13, 2002.

examinations of the RVHP nozzle material will be performed at the next refueling outage.

Cracks in the J-groove weld do not pose an increased risk regarding nozzle ejection as compared to penetration base metal cracks. Cracking that is completely within the weld metal, even if 360° around the nozzle, will not lead to ejection since the portion of the weld that remains attached to the outside surface of the nozzle will not be able to pass through the tight annular fit[7]. J-groove weld cracks that initiate and grow through-wall should ultimately leak the same as cracks in the penetration base metal before a circumferential flaw can grow to a safety significant size. A St. Lucie Unit 1 specific evaluation[2] shows that the time required for propagation of a circumferential flaw to a point where the structural integrity of the penetration would be affected (330°-350°) would be approximately 26 years. The evaluation used the crack growth rates (CGR) in MRP-55[3] with a factor of two applied to the CGR to address the uncertainty associated with OD initiated circumferential flaws. Therefore, weld cracks pose a similar risk as cracks in the base material and are equally detectable by visual examination or by the supplemental UT inspections identified in the FPL response to NRCB 2002-02.

The visual examination frequencies of every refueling outage from the MRP Inspection Plan[7] have been conservatively established based on the risk informed analyses considering leakage and wastage from all sources on and around the RV head. These sources include both J-groove weld metal and base metal cracking. The UT reinspection frequencies of every 4 EDY, not to exceed 10 EFPY (for plants >10 EDY), in the MRP Inspection Plan have also been conservatively established based on the risk informed analyses of nozzle cracking, primarily to protect against circumferential cracking and the potential of nozzle ejection. Therefore, the visual and UT inspection plan identified for St. Lucie Units 1 and 2, provides a technically sound inspection regimen that addresses the weld metal cracking RAI concern by assuring, to a high degree of certainty, that leakage or cracking that can lead to nozzle ejection will be detected at an early stage; long before wastage or circumferential cracking can challenge the structural integrity of the RCS pressure boundary.

NRC RAI Number 2: *Provide your RPV and VHP heat data for Saint Lucie Unit 1*

Response to RAI Number 2: The heat data for the St. Lucie Units 1 and 2 Alloy 600 RVHP nozzle material is provided in Tables 4 and 5.

---

[7] "PWR Reactor Pressure Vessel (RPV) Upper Head Penetrations Inspection Plan (MRP-75)," Revision 1, EPRI, Palo Alto, CA: 2002. 1007337.

RVHP NOZZLE TYPE/ FUNCTION	QTY	HEAT NUMBER	MATERIAL SPECIFICATION	MATERIAL SUPPLIER
CLOS. HD. INST. NOZZLE (ICI)	4	NX 9526	SB-167-600	HUNTINGTON ALLOY
ICI	4	NX 9739	SB-167-600	HUNTINGTON ALLOY
CONTROL ELEMENT DRIVE MECHANISM PENETRATION (CEDM)	21	NX 8623	SB-167-600	HUNTINGTON ALLOY
CEDM PENETRATION	20	NX 8251	SB-167-600	HUNTINGTON ALLOY
CEDM PENETRATION	26	NX 9967	SB-167-600	HUNTINGTON ALLOY
CEDM PENETRATION	2	NX 1405	SB-167-600	INTL NICKEL
VENT PIPE (SINGLE PIECE)	1	NX 0707	SB-167-600	METAL GOODS

Table 4: St. Lucie Unit 1 RVHP Nozzle Material Heat Numbers

RVHP NOZZLE TYPE/ FUNCTION	QTY	HEAT NUMBER	MATERIAL SPECIFICATION	MATERIAL SUPPLIER
ICI	10	NX6106G	SB167-600	HUNTINGTON
CEDM PENETRATION	2	E01547	SB166-600	STANDARD STEEL
CEDM PENETRATION	6	E01749	SB166-600	STANDARD STEEL
CEDM PENETRATION	5	E01547	SB166-600	STANDARD STEEL
CEDM PENETRATION	16	E01689	SB166-600	STANDARD STEEL
CEDM PENETRATION	35	E03045	SB166-600	STANDARD STEEL
CEDM PENETRATION	8	E02845	SB166-600	STANDARD STEEL
CEDM PENETRATION	5	A6777	SB166-600	STANDARD STEEL
CEDM PENETRATION	1	A6926	SB166-600	STANDARD STEEL
CEDM PENETRATION	4	A5849	SB166-600	STANDARD STEEL
CEDM PENETRATION	9	A6785	SB166-600	STANDARD STEEL
VENT PIPE ASSEMBLY		NX5306	SB167-600	METAL GOODS
VENT PIPE ASSEMBLY		NX6842	SB167-600	PIPING SUPPLY

Table 5: St. Lucie Unit 2 RVHP Nozzle Material Heat Numbers

NRC RAI Number 3: Provide a copy of the Condition Reports (CRs) generated as a result of issues with the bare metal, ultrasonic, or visual testing conducted in accordance with Bulletin 2002-02.

Response to RAI #3: Three condition reports (CR) were generated that were directly associated with inspection activities of bare metal visual and ultrasonic testing of the RV head and RVHPs. A list of these CRs with abbreviated subject is provided in Table 6.

CR #	Subject
02-2149	FPL committed to perform visual and ultrasonic examination of all reactor vessel head penetrations during the St. Lucie Unit 1 SL1-18 RFO. This CR is issued to track the results of the examinations.
02-2439	During visual inspection of RV head top surface at penetration locations, debris at or near the penetrations was identified.
02-2517	During review of the ultrasonic (UT) data collected on the reactor head vent line nozzle penetration, it was discovered that the electronic data file(s) had been removed from the ultrasonic data analysis computers.

Table 6: CRs were generated that were directly associated with inspection activities of bare metal visual and ultrasonic testing of the RV head and RVHPs

Copies of the three CRs, 02-2149, 02-2439, and 02-2517 are provided in Attachment 2.

Attachment 2

Copies of Plant Corrective Action Reports generated that were directly associated with inspection activities of bare metal visual and ultrasonic testing of the RV head and RVHPs.

Condition Report Number

CR02-2149

CR02-2439

CR02-2517

ZB N

NPS

SEVERITY LEVEL

A. ☐ 3 working days
B. ☐ 10 calendar days
C. ☒ 30 calendar days
D. ☐ Other

CONDITION REPORT

Due Date: 10/10/02

CR NO. 02-2149

PTN ☐ PSL ☒ JB ☐

PAGE 1 OF _____

CR Administrator

ORIGINATOR

1. SYSTEM #/NAME 01 / RCS UNIT 1
COMPONENT NAME REACTOR VESSELL
DISCOVERY DATE/TIME 9/30/02 - 0720
CR ORIGINATOR PHIL BARNES

COMPONENT ID RX
LOCATION (BLDG/ELEV) RCB/36/N-0/E-0
EVENT DATE/TIME 9/30/02 - 0720
DEPT/PHONE ENG / X7249

2. (ATTACH ADDITIONAL PAGES AS NECESSARY)
(A) CONDITION DESCRIPTION

PER LETTER L-2002-185, FPL COMMITTED TO PERFORM VISUAL AND ULTRASONIC EXAMINATIONS OF ALL REACTOR VESSEL HEAD CEDM, ICI AND HEAD VENT PENETRATION TUBE LOCATIONS DURING THE ST. LUCIE UNIT 1 SL1-18 RFO. A DYE PENETRANT (PT) EXAMINATION WILL BE PERFORMED ON RVH PENETRATION J-GROOVE WELDS UNDER LIMITED CIRCUMSTANCES. THIS CR IS ISSUED TO TRACK THE RESULTS OF THE EXAMINATIONS.

(B) CAUSE (PWSCC)
PRIMARY WATER STRESS CORROSION CRACKING

(C) IMMEDIATE ACTIONS TAKEN
N/A

(D) RECOMMENDED ACTIONS/SUGGESTED ASSIGNEE
ASSIGN TO ENGINEERING

(E) ADDITIONAL REFERENCES (PWO Number(s), Procedure Numbers(s), Persons Contacted, etc)
NRC BULLETIN 2002-02

3. ORIGINATOR REQUESTS COPY OF CLOSED CONDITION REPORT ☒ YES ☐ NO

SUPERVISOR NOTICATION. P.G. BARNES / PG Barnes (PRINT / SIGNATURE) ☐ N/A

NPS

4. OPERABILITY/REPORTABILITY DETERMINATION:
☐ A OPERABILITY ASSESSMENT REQUIRED (3 WORK DAYS)
☐ B POTENTIALLY REPORTABLE (ATTACH ENS WORKSHEET, IF USED)
☒ C NO OPERABILITY CONCERN/NOT REPORTABLE
☐ D OTHER _____

OUTAGE RELATED? ☒ YES ☐ NO
MODE HOLD? ☑ YES ☒ NO
FOR ENTRY INTO MODE F&1

COMMENTS: _____

NPS/VPNE W L Phillips / [signature] (PRINT / SIGNATURE) DATE/TIME 9/30/02 / 1100

VICE PRES., NUCLEAR ENGINEERING

PGM

5. CONDITION REPORT ASSIGNED TO: ENG

COMMENTS: _____

☐ Significance Level 1 - Root Cause Analysis
☐ Significance Level 2 - Apparent Cause
☑ Significance Level 3 - Correction Only
☐ PGM Closeout
☐ Trend Only
☐ Potential Repeat Condition

PGM/VPNE [signature] DATE 10/1/02

CRs ARE QA RECORDS WHEN CLOSED PLEASE ENSURE ALL RESPONSES AND ATTACHMENTS ARE LEGIBLE

Rev 07/31/01

CONDITION REPORT # 02-2149 PAGE 2 OF

ENG/SCE

6 NONCONFORMANCE (NCR) ☐ YES ☒ NO BY: E. Hernandez, [signature]
FUNCTIONAL FAILURE. ☐ YES ☒ NO
PRINT SIGNATURE

N/A

ASSIGNEE

7. INVESTIGATION ANALYSIS, CORRECTIVE ACTIONS GENERIC IMPLICATIONS, DISPOSITION DETAILS, WORK INSTRUCTIONS (ATTACH ADDITIONAL PAGES AS NECESSARY)

INTERIM DISPOSITION #1 - See Attachment 1

INTERIM DISPOSITION #2 - See Attachment 2

INTERIM DISPOSITION #3 - See Attachment 3

INTERIM DISPOSITION #4 - See Attachment 4

FINAL Disposition - see attachment 5

Mode Hold Released AAC 10/15/02

CAUSE CODES: 1) [illegible] 10/15/02 2) C2 3) Q6

8. DOCUMENTATION INITIATED (N/A if not applicable)

PWO
RTS
PMAI

N/A

EVALUATION REQUIRED FOR:

EQ	☐ YES	☒ NO
10CFR50.59	☐ YES	☒ NO
10CFR21	☐ YES	☒ NO
ASME SECTION XI	☐ YES	☒ NO

9. NCR DISPOSITION N/A ☒ REWORK ☐ REPAIR ☐ USE AS-IS ☐ OTHER ☐

REVIEW/APPROVAL

10. DISPOSITION SIGNATURES: (N/A if not applicable)

PREPARER Stephen Collard, [signature], 614-4175 DATE 10/15/02
PRINT SIGNATURE DEPT PHONE

OTHER DEPT CONCUR N/A, DATE
PRINT SIGNATURE

ANII/SEC XI REVIEWER N/A, DATE
PRINT SIGNATURE

PNSC/FRG REVIEW ☐ YES ☒ NO

DEPT HEAD RD Gil, [signature] DATE 10/15/02
PRINT SIGNATURE

NUCLEAR NETWORK ☐ YES ☒ NO MODE RESTRICTION RELEASED ☒ YES ☐ NO ☐ N/A

FRG/PNSC REVIEW (if required in Block 10) MTG# N/A CHAIRMAN DATE

APPROVAL:
PGM/VPNE/MGR [signature] for BK Dunn DATE 10/15/02

ADMIN

EVENT CODES: 1) 01 2) 3) CORNERSTONE AFFECTED: Barrier

CRs ARE QA RECORDS WHEN CLOSED. PLEASE ENSURE ALL RESPONSES AND ATTACHMENTS ARE LEGIBLE

Rev 07/31/01

APPENDIX I CR 02-2149 PG _ of _

CONDITION REPORT INDEPENDENT REVIEW CHECKLIST

(Page 1 of 1)

This checklist is provided as an aid in dispositioning and reviewing Condition Reports. Personnel preparing the CR disposition should review the checklist to ensure that CR program requirements are met. Personnel performing the independent review shall verify that required CR disposition attributes have been addressed by completing the applicable portions of the checklist CRs that have not addressed all program requirements shall be corrected prior to closeout

ALL CONDITION REPORTS:			
ENSURE THAT:	YES	NO	N/A
All blocks and spaces are filled in	✓		
All pages identify the CR, attachment, and page number (consecutively)	✓		
The disposition addresses the identified condition	✓		
The disposition addresses requirements specified in Block 5 by the PGM			✓
Concurrence has been obtained by all affected departments (note: Planning concurrence required for open WO used to track corrective action)	✓		
Cause codes are appropriate	✓		
Open corrective actions are tracked by PMAI or WO and traceable to the CR			✓
Open Work Orders properly reference the CR and are attached			✓
50 59 screening has been completed for NCR use-as-is or repair dispositions			✓
IST and ANII review have been obtained if required			✓
Corrective Actions are timely based upon the significance of the event	✓		

SIGNIFICANCE LEVEL 1 CONDITION REPORTS			
ENSURE THAT:	YES	NO	N/A
Root Cause Analysis completed in accordance with procedure requirements			
If RCA not completed, then PMAI assigned for completion (example: a detailed metallurgical analysis is necessary to determine root cause) NOTE: VP approval Req'd			
The problem is clearly stated			
The data and evidence considered is identified			
Industry Operating Experience is appropriately considered			
Potential failure modes are identified, if applicable			
Tools and techniques used are appropriately selected and identified			
Root cause and contributing causes are identified and appear appropriate			
Corrective actions address the root cause and contributing causes			
Corrective actions are timely and complete			
Generic implications are addressed, and corrective actions assigned as appropriate			
Monitoring and follow-up is addressed to ensure that corrective actions are effective			

SIGNIFICANCE LEVEL 2 CONDITION REPORTS:			
ENSURE THAT:	YES	NO	N/A
The disposition addresses the problem identified in Block 2			
The apparent cause of the problem is clearly identified			
Corrective actions address the immediate problem and prevent recurrence			
Generic implications are adequately addressed			

SIGNIFICANCE LEVEL 3 CONDITION REPORTS:			
ENSURE THAT:	YES	NO	N/A
Corrective actions adequately address the immediate concern	✓		

REPEAT CONDITION REPORTS:			
ENSURE THAT:	YES	NO	N/A
The disposition clearly identifies the CR as a Repeat Condition and evaluates previous occurrences, or provides an adequate basis for determination that a Repeat Condition does not exist			
The disposition addresses ineffectiveness of previous corrective actions			
The disposition identifies how additional corrective actions will prevent recurrence			

Review performed by: T. F. SKIBA / [signature] Ext 694-3318 Date: 10/15/02
Print / Signature

END OF APPENDIX I

INTERIM ENGINEERING DISPOSITION # 01

Background/Event Description

CR02-2149 was issued to capture all identified flaws and repairs identified and/or repaired as part of the SL1-18 RFO Reactor Vessel Head Penetration (RVHP) inspection. In addition areas where interference restricts access to inspection are also identified on CR02-2149. Ultrasonic Testing (UT) inspection could not be performed in CEDM nozzle penetrations numbers 17 and 68 due to interference with the guide sleeve.

CR Originator (or equivalent) Brent Butcher / Ed Belizar contacted on 10/10/02.

Safety Classification: ■ **Safety Related** □ **Quality Related** □ **Not Nuclear Safety**

The reactor vessel is an ASME Class 1 component that is safety related.

Block 6 of CR form:

If the flaw or indication is rejectable the condition is a nonconformance as identified in block 6. If the flaw is identified as through-wall with pressure boundary leakage then the condition is also a maintenance rule functional failure as identified in block 6.

Nonconformance: □ **Yes** ■ **No**

Functional Failure: □ **Yes** ■ **No**

By Scott Boggs / [signature]
Print Sign

Corrective actions to address immediate condition:

Cut and remove CEDM thermal liner/guide sleeve as identified in CRN 02110-10330, drawing 8770-14408 Rev. New. Repeat UT scan using the appropriate scan probe method to obtain UT data from 100% of the nozzle ID area of interest (~ 2" above the weld down to the accessible end of the nozzle).

Flare cut end of liner remnant per the instructions in step 2 of CRN 02110-10330 drawing 8770-14408 Rev. New.

Install the new guide funnel / cone in accordance with CRN 02110-10330 and approved vendor procedures.

The new guide funnel is a non structural attachment to the non pressure boundary extension of the CEDM nozzle inside the reactor vessel head. Since this weld is being made at the interface to an ASME Section III NB Code jurisdictional boundary the rules of NB-4435 are used as guidance. The welders and weld procedures shall be qualified per the rules of ASME Section IX. The weld material and nozzle material shall be identifiable and suitable for joining to the CEDM nozzle. Per the FPL Weld Control Manual STD-W-12 R5, this category 1 joint config. "G" weld, requires a VT fitup and VT final examination. As this is a modification to the reactor vessel at An ASME Code boundary interface a Section XI and ANII review is required.

References:

PC/M 02110 and PC/M drawing ENG-02110-001, "St. Lucie Unit 1 CEDM Nozzle ID Temper Bead Weld Repair,"

Block 8 of CR form: The 10CFR50.59 evaluation for this type of modification has been addressed in PC/M 02110.

Block 9 NCR Disposition: ■ **N/A** □ **Repair** □ **Use as is** (A 50.59 screening is attached for all repair & use as is NCRs)

Block 10 of CR Form:

ANII/Sect XI Reviewer: [illegible] 10/11/02 / T. P. Coste [illegible] **Date:** 10-11-02

FRG Review: (required for Repairs and Use as is) ☐ **Yes** ■ **No**

Preparer: R. Scott Boggs / [illegible] Date: 10-11-02
Print Signature

Reviewed: W. B. Neff / W. B. Neff Date: 10-11-02
Print Signature

Approved: P. G. Barnes / [illegible] Date: 10-11-02
Print Signature

INTERIM ENGINEERING DISPOSITION # 02

Background/Event Description

CR02-2149 was issued to capture all identified flaws and repairs identified and/or repaired as part of the SL1-18 RFO Reactor Vessel Head Penetration (RVHP) inspection. In addition, areas where interference restricts access to inspection are also identified on CR02-2149. Ultrasonic Testing (UT) inspection could not be performed in CEDM nozzle penetrations numbers 17 and 68 due to interference with the guide sleeve.

CR Originator (or equivalent) Brent Butcher / Ed Belizar contacted on 10/10/02.

Safety Classification: ■ **Safety Related** ☐ **Quality Related** ☐ **Not Nuclear Safety**

The reactor vessel is an ASME Class 1 component that is safety related.

Block 6 of CR form:

If the flaw or indication is rejectable the condition is a nonconformance as identified in block 6. If the flaw is identified as through-wall with pressure boundary leakage then the condition is also a maintenance rule functional failure as identified in block 6.

Nonconformance: ☐ **Yes** ■ **No**

Functional Failure: ☐ **Yes** ■ **No**

By W. B. Neff, W. B. Neff
Print Sign

Corrective actions to address immediate condition:

Interim Disposition #02 accomplishes the same task as Interim Disposition #01. Implementation notes were changed, one dimension reference was deleted, a weld option detail for a manual SMAW was added and tolerance for dimension M was increased from – 0.125 to –0.25" on Framatome ANP Drawing 5021230E, Rev. 0 (8770-14408 Rev. New) and ENG-02110-001 Rev. 0 (8770-14400 Rev. New). These changes have been captured by CRN 02110-10335. CRN 02110-10335 supercedes CRN 02110-10330 which was referenced on Interim Disposition #01.

Cut and remove CEDM thermal liner/guide sleeve as identified in CRN 02110-10335, drawing 8770-14408 Rev. New. Repeat UT scan using the appropriate scan probe method to obtain UT data from 100% of the nozzle ID area of interest (~ 2" above the weld down to the accessible end of the nozzle).

Flare cut end of liner remnant per the instructions in step 2 of CRN 02110-10335 drawing 8770-14408 Rev. New.

Install the new guide funnel / cone in accordance with CRN 02110-10335 and approved vendor procedures.

The new guide funnel is a non structural attachment to the non pressure boundary extension of the CEDM nozzle inside the reactor vessel head. Since this weld is being made at the interface to an ASME Section III NB Code jurisdictional boundary the rules of NB-4435 are used as guidance. The welders and weld procedures shall be qualified per the rules of ASME Section XI. The weld material and nozzle material shall be identifiable and suitable for joining to the CEDM nozzle. Per the FPL Weld Control Manual STD-W-12 R5, this category 1 joint config. "G" weld, requires a VT fitup and VT final examination. As this is a modification to the reactor vessel at an ASME Code boundary interface a Section XI and ANII review is required.

References:

PC/M 02110 and PC/M drawing ENG-02110-001, "St. Lucie Unit 1 CEDM Nozzle ID Temper Bead Weld Repair,"

Block 8 of CR form: The 10CFR50.59 evaluation for this type of modification has been addressed in PC/M 02110.

Block 9 NCR Disposition: ■ **N/A** ☐ **Repair** ☐ **Use as is** (A 50.59 screening is attached for all repair & use as is NCRs)

Block 10 of CR Form:

ANII/Sect XI Reviewer: 10/12/02 **Date:** 10-12-02

FRG Review: (required for Repairs and Use as is) ☐ **Yes** ■ **No**

Preparer: T.F. SKIBA / Date: 10/12/02

Print Signature

Reviewed: C WARD / Date: 10/12/02

Print Signature

Approved: P.G. BARNES / Date: 10/12/02

Print Signature

INTERIM ENGINEERING DISPOSITION # 03

Background/Event Description JAN 10/13/03

CR 02-2149 was issued to capture all identified flaws and repairs identified and/or repaired as part of the SL1-18 RFO Reactor Vessel Head Penetration (RVHP) inspection. In order to inspect nozzles CEDM 17 and ~~18~~ 68 the guide sleeves were removed. Framatome ANP issued NCR's 6018042 and 6018047 concerning the cut location for nozzles 17 and 68 exceeding the tolerance (+0/-.125) for dimension M called out on drawing number 02-5019944E-01. Nozzles 17 and 68 exceed the cut line tolerance by 1/8" and ~~7/32~~ 3/32" respectively. DW 10/13/03

CR Originator (or equivalent) Phil Barnes contacted on 10/12/02.

Safety Classification: ■ **Safety Related** ☐ **Quality Related** ☐ **Not Nuclear Safety**

The reactor vessel is an ASME Class 1 component that is safety related.

Block 6 of CR form:

If the flaw or indication is rejectable the condition is a nonconformance as identified in block 6. If the flaw is identified as through-wall with pressure boundary leakage then the condition is also a maintenance rule functional failure as identified in block 6.

Nonconformance: ☐ **Yes** ■ **No** By W.B. Neff (Print) W.B. Neff (Sign)

Functional Failure: ☐ **Yes** ■ **No**

Corrective actions to address immediate condition:

Framatome NCR's state exceeding the guide sleeve cut line tolerance by 1/8" and 3/32" will not have any impact on guide funnel replacement. The CEDM replacement guide machining, installation and flaring operations are independent of the guide sleeve cut length. If in the future a CEDM Nozzle ID Temper Bead Weld Repair is required this will have no impact. CRN 02110-10335 has changed the tolerance for dimension M on drawings ENG-02110-001 (8770-14400, Framatome ANP drawing 5019944) and 8770-14408 (Framatome ANP drawing 5021230) to +0 / -0.25 ". Therefore, the cut line tolerance for the guide sleeves on Nozzles 17 and 68 are within the design requirements of the CRN and there is no non-conformance to the design.

References:

1. PC/M 02110 Rev. 0
2. CRN 02110-10335
3. Framatome ANP NCR 6018042
4. Framatome ANP NCR 6018047

Block 8 of CR form: The 10CFR50.59 evaluation for this type of modification has been addressed in PC/M 02110.

Block 9 NCR Disposition: ■ **N/A** ☐ **Repair** ☐ **Use as is** (A 50.59 screening is attached for all repair & use as is NCRs)

Block 10 of CR Form:

ANII/Sect XI Reviewer: N/A / N/A **Date:** _____

FRG Review: (required for Repairs and Use as is) ☐ **Yes** ■ **No**

Preparer: W.B. Neff, W.B. Neff Date: 10/12/02

Print Signature

Reviewed: CALWARD, [signature] Date: 10/13/02

Print Signature

Approved: ROGK, [signature] Date: 10/13/02

Print Signature

ATTACHMENT 3 To CR 02-2149 Pg 3 of 6

22144-8 (3/2002)

FRAMATOME ANP

NONCONFORMANCE REPORT
WORKING INSTRUCTION WI-9

NCR# 6018042 REV.# 00 PAGE 1 OF 2

SECTION 1 INITIATION

CONTRACT #: 1231205 CUSTOMER/SITE/UNIT: FP&L St. Lucie Unit 1

TECHNICAL DOCUMENT#: 50-5020568-00 SEQUENCE/STEP #: 85

DESCRIPTION OF NONCONFORMANCE/CONDITION: ☐ QA INITIATED

Guide Sleeve cut location for Nozzle No. 17 exceeds tolerance (+0 / - .125) called out on drawing no. 02-5019944E-01 by 1/8" inches. One side of the tool is in contact with the guide and on the other side there is a 1/4" gap.

INITIATOR: Walt Bryant (NAME) DATE/TIME: 10/12/02 5:45 AM TAG PLACED ☐ YES ☒ NO

SENT TO: Tom Haertel REQUESTED COMPLETION DATE: 10/12/02

SECTION 2 RESOLUTION AND DISPOSITION

NCR CLASSIFICATION: ☒ SAFETY-RELATED ☐ NON SAFETY-RELATED ☐ ASME CODE

SIGNIFICANCE LEVEL: ☐ I ☐ II ☒ III ☐ NONE

DISPOSITION OF NCR: ☐ REWORK/REINSPECT ☐ REPAIR/RE-INSPECT ☒ USE AS IS ☐ REPLACE ☐ OTHER

DISPOSITION:

Exceeding the Guide Sleeve cut line tolerance by 1/8" inches will not have any impact on Guide Funnel replacement (FRA-ANP Doc. No. 02-5021230E-00). The CEDM Replacement Guide machining, installation and the flaring operations are independent of Guide Sleeve cut length.

Exceeding the Guide Sleeve cut line tolerance by 1/8" inches will not have any impact on CEDM Nozzle ID Temper Bead Weld Repair (FRA-ANP Doc. No. 02-5019944E-01). The as-cut end of the Guide Sleeve remaining in the nozzle is used as a reference datum with respect to the bottom of the nozzle during the repair process. There is sufficient adjustability built into the repair process tooling to allow for the 1/8" inch variation in Guide Sleeve cut location.

CAUSE: Material CAR/RO REQUIRED ☐ YES ☒ NO NUMBER

VENDOR (if applicable)

PREVENTATIVE ACTIONS:

None. The guide and guide sleeve damage during a previous outage.

APPLICABLE TO OTHER CONTRACTS: ☐ YES ☒ NO

RESOLUTION:

N/A

AFFECTED ORGANIZATION: CR & R SCHEDULED COMPLETION DATE: 10/12/02

RESPONSIBLE INDIVIDUAL/ENGINEER: TJ Haertel (SIGNATURE) TJ Haertel (NAME) 10/12/02 (DATE)

APPROVAL REQUIRED: ☐ ANI/ANII ☒ CUSTOMER ☐ QA ☐ AI INSPECTOR

ATTACHMENT 3 To CR02-2149 Pg 4 of 6

22144-8 (3/2002)

FRAMATOME ANP

NONCONFORMANCE REPORT CONTINUATION
WORK INSTRUCTION WI-9

NCR#	6018042	REV.#	00	PAGE 2 OF 2

SECTION 3 DISPOSITION APPROVAL

	(SIGNATURE)	(NAME)	(DATE)
REVIEWER:	TJ Haertel for	JB Dishman per telecon	10/12/02
UNIT MANAGER: (See Note 1 Below)	[signature]	R. Payne	10/12/02
CUSTOMER APPROVAL: (If required)	[signature]	E. Cartwright	10-12-02
ANI/ANII/AI / Inspector Review (If required)	N/A		
QA Approval (If required)	N/A	N/A	

Note: 1: For significance Level I and II NCRs, the Unit Manager's signature indicates that the CAR/RO actions have been completed or for a CAR that work may continue.

SECTION 4 DISPOSITION COMPLETION

THE DISPOSITION ACTIONS SPECIFIED IN SECTION 2 HAVE BEEN COMPLETED.

	(SIGNATURE)	(NAME)	(DATE)
VERIFIED BY:			
QA VERIFICATION: (If required)	N/A	N/A	

SECTION 5 PREVENTATIVE ACTION COMPLETION

THE PREVENTATIVE ACTIONS SPECIFIED IN SECTION 2 HAVE BEEN COMPLETED. THIS NCR IS CLOSED.

	(SIGNATURE)	(NAME)	(DATE)
VERIFIED BY:			
QA VERIFICATION: (If required)	N/A	N/A	

DISTRIBUTION

Project Engineer	TJ Haertel	Records Management - - T5.16	Other	SM Hunter
Unit Technical Manager	RJ Payne	QA	Specify	JB Dishman

22144-8 (3/2002)

FRAMATOME ANP

NONCONFORMANCE REPORT
WORKING INSTRUCTION WI-9

NCR# 6018047 | REV.# 00 | PAGE 1 OF 2

SECTION 1 INITIATION

CONTRACT #: 1231205 CUSTOMER/SITE/UNIT: FP&L St. Lucie Unit 1

TECHNICAL DOCUMENT#: 50-5020566-00 SEQUENCE/STEP #: 85

DESCRIPTION OF NONCONFORMANCE/CONDITION: ☐ QA INITIATED

Guide Sleeve cut location for Nozzle No. 68 exceeds tolerance (+0 / - .125) called out on drawing no. 02-5019944E-01 by 3/32". One side of the tool is in contact with the guide and on the other side there is a 7/32".

INITIATOR: Walt Bryant (NAME) DATE/TIME: 10/12/02 1:20 PM TAG PLACED ☐ YES ☒ NO

SENT TO: Tom Haertel REQUESTED COMPLETION DATE: 10/12/02

SECTION 2 RESOLUTION AND DISPOSITION

NCR CLASSIFICATION: ☒ SAFETY-RELATED ☐ NON SAFETY-RELATED ☐ ASME CODE

SIGNIFICANCE LEVEL: ☐ I ☐ II ☒ III ☐ NONE

DISPOSITION OF NCR: ☐ REWORK/REINSPECT ☐ REPAIR/RE-INSPECT ☒ USE AS IS ☐ REPLACE ☐ OTHER

DISPOSITION:

Exceeding the Guide Sleeve cut line tolerance by 3/32 inches will not have any impact on Guide Funnel replacement (FRA-ANP Doc. No. 02-5021230E-00). The CEDM Replacement Guide machining, installation and the flaring operations are independent of Guide Sleeve cut length.

Exceeding the Guide Sleeve cut line tolerance by 3/32 inches will not have any impact on CEDM Nozzle ID Temper Bead Weld Repair (FRA-ANP Doc. No. 02-5019944E-01). The as-cut end of the Guide Sleeve remaining in the nozzle is used as a reference datum with respect to the bottom of the nozzle during the repair process. There is sufficient adjustability built into the repair process tooling to allow for the 3/32 inches variation in Guide Sleeve cut location.

CAUSE: Material CAR/RO REQUIRED ☐ YES ☒ NO NUMBER

VENDOR (if applicable)

PREVENTATIVE ACTIONS:

None. The guide and guide sleeve damage during a previous outage.

APPLICABLE TO OTHER CONTRACTS: ☐ YES ☒ NO

RESOLUTION:

N/A

AFFECTED ORGANIZATION: CR & R SCHEDULED COMPLETION DATE: 10/12/02

RESPONSIBLE INDIVIDUAL/ENGINEER: TJ Haertel (SIGNATURE) TJ Haertel (NAME) 10/12/02 (DATE)

APPROVAL REQUIRED: ☐ ANI/ANII ☒ CUSTOMER ☐ QA ☐ AI INSPECTOR

ATTACHMENT 3 To CR 02-2149 Pg 6 of 6

22144-8 (3/2002)

FRAMATOME ANP

NONCONFORMANCE REPORT CONTINUATION
WORK INSTRUCTION WI-9

NCR#	6018047	REV.#	00	PAGE 2 OF 2

SECTION 3 DISPOSITION APPROVAL

	(SIGNATURE)	(NAME)	(DATE)
REVIEWER:	D.E. Washey	R.E. WASHEY	10/12/02
UNIT MANAGER: (See Note 1 Below)	[illegible]	R. Payne	10/12/02
CUSTOMER APPROVAL: (If required)	[illegible]	E.P. BELIZAL	10-12-02
ANI/ANII/AI / Inspector Review (If required)	N/A	N/A	
QA Approval (If required)	N/A	N/A	

Note: 1: For significance Level I and II NCRs, the Unit Manager's signature indicates that the CAR/RO actions have been completed or for a CAR that work may continue.

SECTION 4 DISPOSITION COMPLETION

THE DISPOSITION ACTIONS SPECIFIED IN SECTION 2 HAVE BEEN COMPLETED.

	(SIGNATURE)	(NAME)	(DATE)
VERIFIED BY:			
QA VERIFICATION: (If required)	N/A	N/A	

SECTION 5 PREVENTATIVE ACTION COMPLETION

THE PREVENTATIVE ACTIONS SPECIFIED IN SECTION 2 HAVE BEEN COMPLETED. THIS NCR IS CLOSED.

	(SIGNATURE)	(NAME)	(DATE)
VERIFIED BY:	N/A	N/A	
QA VERIFICATION: (If required)	N/A	N/A	

DISTRIBUTION

Project Engineer	TJ Haertel	Records Management - - T5.16		Other	SM Hunter
Unit Technical Manager	RJ Payne	QA		Specify	JB Dishman

INTERIM ENGINEERING DISPOSITION # 04

Background/Event Description

CR 02-2149 was issued to capture all identified flaws and repairs identified and/or repaired as part of the SL1-18 RFO Reactor Vessel Head Penetration (RVHP) inspection. In order to inspect CEDM nozzles # 17 and 68 the guide sleeves were removed. Framatome ANP issued NCR 6018050 concerning a remnant ring, which was left after cutting the guide sleeves.

CR Originator (or equivalent) Phil Barnes contacted on 10/13/02.

Safety Classification: ■ **Safety Related** ☐ **Quality Related** ☐ **Not Nuclear Safety**

The reactor vessel is an ASME Class 1 component that is safety related.

Block 6 of CR form:

The remnant ring is not acceptable and is a NCR as identified in block 6. CEDM nozzles # 17 and 68 remaining guide sleeves shall be reworked to remove the remnant. This condition is not a maintenance rule functional failure as identified in block 6.

Nonconformance: ■ **Yes** ☐ **No** By W.B. Neff, W.B. Neff
Print Sign

Functional Failure: ☐ **Yes** ■ **No**

Corrective actions to address immediate condition:

Attached is Framatome NCR 6018050, which describes the subject condition and provides a method to remove the remnants. The method to remove the remnants consists of inserting a squaring tool into the nozzles. The squaring tool consists of a flat grinding wheel mounted on an air driven shaft. The squaring tool is described as a grinding wheel housed in a Delrin cup and supported by two bushings. The Delrin cup is intended to ensure the grinding wheel does not come in contact with the CEDM nozzle. Therefore, the remnants in CEDM # nozzles 17 and 68 shall be removed and the Framatome method is acceptable based on the following:

1. The squaring tool shall be designed to not allow the grinding wheel to contact a CEDM nozzle.
2. No remnants or loose debris shall remain in CEDM nozzles # 17 and 68 after the rework is completed.
3. Video inspection of the nozzles shall be performed to verify remnant and debris removal.

References:

1. PC/M 02110 Rev. 0
2. CRN 02110-10335
3. Framatome ANP NCR 6018050
4. WO # 32017822-1A

Operability:

St. Lucie Unit 1 is in a refueling outage. This CR documents field anomalies concerning the removal of CEDM thermal sleeves to allow inspection of the CEDM nozzles. The reactor vessel head is removed and out of service. This condition is being reworked. Therefore this CR is not an operability concern. This CR is a Mode Hold for fill and vent.

Block 8 of CR form: The 10CFR50.59 evaluation for this modification has been addressed in PC/M 02110. This task is being worked under WO # 32017822-1A.

Block 9 NCR Disposition: ☐ N/A ■ Rework ☐ Repair ☐ Use as is (A 50.59 screening is attached for all repair & use as is NCRs)

Block 10 of CR Form:

ANII/Sect XI Reviewer: N/A / N/A **Date:** _____

FRG Review: (required for Repairs and Use as is) ☐ Yes ■ No

Preparer: W.B. Neff W.B. Neff Date: 10/13/02
Print Signature

Reviewed: R. Scott Boggs/ R. Scott Boggs Date: 10-13-02
Print Signature

Approved: P.G. BARNES/ P.G. B Date: 10-13-02
Print Signature

ATTACHMENT 4 to CR 02-2149 Pg 3 of 5

22144-8 (3/2002)

FRAMATOME ANP

NONCONFORMANCE REPORT
WORKING INSTRUCTION WI-9

NCR# 6018050 | REV.# 00 | PAGE 1 OF 3

SECTION 1 INITIATION

CONTRACT #: 1231205 CUSTOMER/SITE/UNIT: FPL / St Lucie Unit 1

TECHNICAL DOCUMENT#: 03-5017741-00 SEQUENCE/STEP #: 6.18

DESCRIPTION OF NONCONFORMANCE/CONDITION: ☐ QA INITIATED

A remnant ring was left in Nozzle Location No.17 which is 360° and held by an approximate 15° segment.
A remnant ring was left in Nozzle Location No.68 which is 20 to 30° and held by an approximate 15° segment.

INITIATOR: Ron Payne (NAME) DATE/TIME: 10/12/2002 5:00 PM TAG PLACED ☐ YES ☒ NO

SENT TO: Tom Haertel (NAME) REQUESTED COMPLETION DATE: 10/13/02

SECTION 2 RESOLUTION AND DISPOSITION

NCR CLASSIFICATION: ☒ SAFETY-RELATED ☐ NON SAFETY-RELATED ☐ ASME CODE

SIGNIFICANCE LEVEL: ☐ I ☐ II ☒ III ☐ NONE

DISPOSITION OF NCR: ☒ REWORK/REINSPECT ☐ REPAIR/RE-INSPECT ☐ USE AS IS ☐ REPLACE ☐ OTHER

DISPOSITION:
Remove the remnant using the process contained on Page 3.

CAUSE: N/A CAR/RO REQUIRED ☐ YES ☒ NO NUMBER

VENDOR (if applicable)

PREVENTATIVE ACTIONS:
None. This was a known condition that could happen. There is a Step in referenced Operation Instruction to account for the remnant ring.

APPLICABLE TO OTHER CONTRACTS: ☐ YES ☒ NO

RESOLUTION:
N/A

AFFECTED ORGANIZATION: CR&R SCHEDULED COMPLETION DATE: 10/13/02

RESPONSIBLE INDIVIDUAL/ENGINEER: TJ Haertel (SIGNATURE) TJ Haertel (NAME) 10/13/02 (DATE)

APPROVAL REQUIRED: ☐ ANI/ANII ☒ CUSTOMER ☐ QA ☐ AI INSPECTOR

ATTACHMENT 4 To CR02-2149 Pg 4 of 5

22144-8 (3/2002)

FRAMATOME ANP

NONCONFORMANCE REPORT CONTINUATION
WORK INSTRUCTION WI-9

NCR#	6018050	REV.#	00	PAGE 2 OF 3

SECTION 3 DISPOSITION APPROVAL

	(SIGNATURE)	(NAME)	(DATE)
REVIEWER:	MA Scoman	MA SCOMAN	10-13-02
UNIT MANAGER: (See Note 1 Below)	TJ Haerte for	RJ Payne per Telecon	10/13/02
CUSTOMER APPROVAL: (If required)	RJB O'Cantwright	E. CARTWRIGHT	10-13-02
ANI/ANII/AI / Inspector Review (If required)	N/A	N/A	
QA Approval (If required)	N/A	N/A	

Note: 1: For significance Level I and II NCRs, the Unit Manager's signature indicates that the CAR/RO actions have been completed or for a CAR that work may continue.

SECTION 4 DISPOSITION COMPLETION

THE DISPOSITION ACTIONS SPECIFIED IN SECTION 2 HAVE BEEN COMPLETED.

	(SIGNATURE)	(NAME)	(DATE)
VERIFIED BY:			
QA VERIFICATION: (If required)	N/A	N/A	

SECTION 5 PREVENTATIVE ACTION COMPLETION

THE PREVENTATIVE ACTIONS SPECIFIED IN SECTION 2 HAVE BEEN COMPLETED. THIS NCR IS CLOSED.

	(SIGNATURE)	(NAME)	(DATE)
VERIFIED BY:	N/A	N/A	
QA VERIFICATION: (If required)	N/A	N/A	

DISTRIBUTION

Project Engineer	TJ Haertel	Records Management - - T5.16		Other	SM Hunter
Unit Technical Manager	RJ Payne	QA	MG Gerlach	Specify	JB Dishman

Remnant Removal Tooling
Squaring Tool

Background

The guide sleeve severing process creates a remnant that normally is removed with the lower half of the guide sleeve; however, on both locations, #17 and #68, a portion of this remnant remained with the upper half of the sleeve. The two locations were damaged previously and contained a reduced diameter and bent condition. It is believed that this caused the tool to behave differently due to the fact that the tool could not be accurately centered.

To correct this problem, a squaring tool was developed that is simply a flat grinding wheel mounted on a air driven shaft. The wheel is housed in a Delrin cup and supported by two bushings (on the nozzle ID, and on the sleeve ID). The face of the grinding wheel will be used to cut/grind the remnant free.

Tool Setup

1. Utilize the Honing Tool OI as necessary to setup and checkout the Honing Tool.
2. Verify that all fasteners are secure on the Squaring Tool.
3. Connect the Squaring Tool to the collet on the air motor.
4. Stage the tool, and route the air line for easy entry under the head.
5. Setup, checkout, and stage the manual pole camera.
6. Setup, and stage the swab tool.

Tool Operation

1. Insert the tool into the target location until the grinding wheel face hardstops on the sleeve.
2. Lower the tool slightly off the face and start the air motor.
3. Raise the tool and apply light pressure to grind off the remnant.
4. Continue to run tool for approx. 45 sec.
5. Stop the air motor, then remove the tool.
6. Inspect the location with video.
7. If the remnant rolls to the OD, it may be required to move it back toward the ID.
8. Repeat steps as necessary.
9. Clean/swab the location as necessary to remove any remaining debris.

Background

CR02-2149 was issued to capture all identified flaws, repairs, and issues associated with FPL response to NRC Bulletin 2002-02. This disposition provides closure to all issues associated with this examination effort. Work orders WO 31011907-03 (UT inspection), WO 32017822-0 (thermal sleeve removal), and WO 32017822-02 (guide funnel installation) were established to perform this body of examination and repair activity.

On August 9, 2002, the Nuclear Regulatory Commission (NRC) issued Bulletin 2002-02, "Reactor Pressure Vessel Head and Vessel Head Penetration Nozzle Inspection Programs." The NRC requested that specific information be provided within 30 days of the date of the Bulletin:

"PWR addressees who plan to supplement their inspection programs with non-visual NDE methods are requested to provide a summary discussion of the supplemental inspections to be implemented. The summary discussion should include EDY, methods, scope, coverage, frequencies, qualification requirements, and acceptance criteria."

FPL responded that, St. Lucie Unit 1 reactor pressure vessel (RPV) head and RPV head penetration nozzle inspections will combine both visual and non-visual methods at the next refueling outage (SL1-18). FPL will supplement visual examination with ultrasonic examination of the RPV head penetration base material on the top of the reactor vessel head during the next scheduled RFO for St. Lucie Unit 1. Penetrant testing will be used to assist in characterization of any leakage indication not confirmed in the tube material.

Specific commitments applicable to St. lucie Unit 1 from Letter L-2002-185 are as follow:

"2.a. Ultrasonic Testing (UT) of the RPV Head Penetration Base Material
An ultrasonic (UT) examination of all of the CEDMs, ICIs and head vent penetration tube locations will be performed at the next St. Lucie Unit 1 RFO. The examination scope will include the material starting from approximately 2" above the weld down to the bottom end (to the maximum extent possible) of the respective penetration. The UT examination has been demonstrated to detect both axial and circumferential flaws initiating from the inside diameter (ID) or outside diameter (OD) surface of the tube material. Since this UT examination will detect circumferential cracks in the tube, the concern regarding penetration ejection from crack propagation in the tube material is effectively addressed.

2.b. UT "Leak Path" Examination
A UT back reflection monitoring examination of the interference fit region above the weld will be performed to determine if a reactor coolant leak has occurred into the annulus causing corrosion in the interference fit region. This UT technique is referred to as a "leak path" examination. In all previous UT examinations of CRDMs with known leakage performed by Framatome ANP, the FPL contracted vendor, a leak path has been observed with the UT scan that corresponded to the known leakage. The UT "leak path" examination provides additional confirmation of the visual results and also addresses the concern of potential wastage resulting from a leak. Therefore, a complete UT examination for detection of axial and circumferential flaws combined with a "leak path"

examination addresses the wastage concern resulting from leakage and the potential for a nozzle ejection resulting from a circumferential crack above the weld.

2.c. Bare Metal Visual Examination of RPV Head Penetration to RPV Head Surface
A 100 % bare metal visual inspection under the closely conforming metal insulation as previously identified and described in the response to Bulletin 2001-01will be performed at the next St. Lucie Unit 1 RFO. The scope of this visual examination is planned for 100%, however, some physical limitations may exist that preclude complete visual examination of all nozzles at St. Lucie Unit 1. A bare metal visual examination will be performed at all locations with identified flaws or "leak path" indications from the UT examinations in 2.a and 2.b above, to determine if leakage or degradation has occurred. The visual examination at St. Lucie Unit 1 is considered "qualified" at all RPV head penetration locations based on a draft plant specific finite element analysis that is being reviewed. The draft analysis shows that a gap would exist between each RPV head penetration and the RPV steel during operation to allow a leak to communicate with the top surface of the reactor vessel head at St. Lucie Unit 1. Therefore a visual examination with no evidence of boric acid leakage addresses the concern that wastage has not occurred on the top of the head or in the nozzle annulus since any leak would provide visual evidence of boron on the head. "

It was further noted that :

"2.e. Potential interferences: The planned scope of the bare metal visual and UT examinations at St. Lucie Unit 1 is 100% of the RPV head penetrations. However, since FPL has not previously performed a visual examination under the closely conforming metal insulation on the St. Lucie Unit 1 RPV head, it is not known if physical restrictions exist that could preclude examination of some portion of the RPV head penetrations. Physical restrictions may also exist for some portion of the St. Lucie Unit 1 UT examinations. Specifically, the CEDM penetrations have guide/thermal sleeves with a funneled end installed inside the CEDM penetration to position the CEDM shaft. There is also a counterbore step above the weld. This results in an annular gap of approximately 0.175" that reduces to 0.123" for inspection using a thin "gap scanning" UT probe. Each sleeve is centered by three expansion points or tabs made in the sleeve above the weld to contact the CEDM penetration. Examination near these expansions with the gap scanning probe may be limited and could affect examination in the area of interest. Actual coverage can only be determined after scanning and imaging the nozzle. Also at least one thermal sleeve was bent and straightened during a prior RFO that may result a limitation for the gap scanning UT probe. Where significant limitations exist that preclude a reasonable determination of the integrity of a nozzle to be made, the limitations will be noted and reported as requested by Bulletin 2002-02 request 2.A.

It is noted that the St. Lucie Unit 1 examination will be the first use of a gap scanning probe on a CE designed unit with guide tube/thermal sleeves, which could result in some unforeseen interferences"

Not all these commitments were accomplished during the examinations:

Summary of Examination Issues:

1. Leak path examination not accomplished on 47 of 78 penetrations

2. Incomplete examination results were reported in the area above the weld in 2 penetrations (#2 & 38). Incomplete results were also obtained in 6 locations at the weld root (#2, 11, 14, 33, 38, & 47). A significant number of nozzles had incomplete coverage at and below the weld.

3. One nozzle at penetration No. 2 had incomplete UT test results at the root of the weld and above the weld over a 24-degree segment and incomplete VT results. This was the only penetration that had incomplete visual and ultrasonic data.

4. Two nozzles, numbers 68 and 17 were bent so as to preclude blade probe access. No ultrasonic blade probe data could be collected

5. The examination scope was to include the material starting from approximately 2" above the weld down to the bottom end (to the maximum extent possible) of the respective penetration. This coverage was not attained.

Safety Classification is safety related because the RV head penetrations are pressure boundary components on the safety related reactor pressure vessel head.

UFSAR and Technical Specification sections reviewed

Unit 1 UFSAR (Amend 18) –Sections 4.1,4.2.3, 5.2.3.3, 5.4, & 9.4.8.3
Unit 1 Technical Specifications (Amend. 185)- Sections 3.4.6.2 & 3.4.10.1

Discussion of Issues:

There were no indications of leakage or cracking shown by any of the examination methods performed. The only conditions discussed in this document are those of incomplete coverage and compliance to commitments made in response to NRC Bulletin 2002-02.

Most penetrations have identified areas of limited coverage due to issues related to maintaining surface contact between the UT probe and the penetration surface. The regions of limited coverage have been localized primarily to the weld region and/or the nozzle material below the weld and are generally located on the downhill side of the nozzle penetration. Refer to Figure 1 for an illustration of the coverage obtained for a typical nozzle examination. Contact between the

probe and examination surface is affected by the gap between the guide sleeve and the nozzle penetration ID surface, and by the delivery method of the blade UT probe into the gap. The UT probe is delivered into the gap between the guide sleeve and the nozzle penetration by flexing the probe around the guide funnel that is in close proximity to the CEDM penetration. See Figure 2 below for an illustration of the insertion of the blade probe. The blade probe is designed to fit a nominal gap size and has compliance built in for slight variations in the sleeve centering. This compliance allows for the probe to be inserted into a range of gap sizes to compensate for guide sleeve positioning. However, if the guide sleeve is offset to one side of the nozzle that provides a gap that exceeds the tolerance of the probe compliance, contact with the examination surface will not be maintained. Shrinkage of the nozzle ID surface in the weld region due to welding adds to the surface contact issue. The nozzle penetrations examined at St. Lucie Unit 1 have exhibited evidence of shrinkage at the nozzle ID surface in the weld region; refer to Figure 3 for an example of the effects of the shrinkage for maintaining contact.

The guide sleeves cannot be moved to adjust the gap between the sleeve and the nozzle penetration. Additional scans have been performed in an attempt to provide more coverage of the examination area. Slower probe speeds, addition of more couplant and use of different probes were tried. The rescans were unsuccessful in providing additional coverage of the examination area. It is Framatome's position that the data supplied is the best that could be provided using blade probes.

The matrix in Table 1 shows the results of all examinations. The data collected is the best that could be provided with current available technology. The inspection results (visual and volumetric) were evaluated to confirm that no penetration exhibited evidence of leakage or loss of structural integrity.

Disposition of Areas of Concern

Leak path examination was not accomplished in 47 penetrations because of geometrical conditions existing in the PSL Unit 1 head penetrations. A counterbore exists at the bottom of the penetration below the area of interference fit (except for the vent line which was not installed with an interference fit). This issue was discussed in the FPL response to the Bulletin. To get a leak path exam the blade probe must acquire data in this region and detect the presence of the interference fit back reflection. The leakpath technique involves the display of the amplitude profile from the nozzle backwall above the weld in the interference fit region. Leak path determination was not possible in 47 nozzles because the blade probe could not always access this area 360 degrees around or the scan height was not sufficiently above the interference fit region to determine if a leak path existed. It is also possible that the interference fit was looser than needed to provide a back wall reflection to make a leak path

determination. If this is the cause, then the visual examination results are strongly supported.

Partial leak path is not considered a successful exam. However some coverage was obtained on some penetrations which supplies some additional assurance.

Since leak path is considered to be a backup exam to the bare head visual exam and there was close to 100% coverage with visual examination, the loss of leak path is not critical. The UT leak path examination was attempted, but good data could not be collected in all locations. The alternative visual examination coupled with finding no defects (by UT) above the weld assure us that there is no leakage present.

The intent of the examination was to perform a 360 degree exam of the following areas:

above the weld	- 76 of 78 exams accomplished
at the weld root	- 72 of 78 exams accomplished
in the area adjacent to the weld	- 17of 78 exams accomplished
below the weld	- 14 of 69 exams accomplished

The areas of prime interest because of the safety concern for nozzle ejection and LOCA are in the nozzle material at the weld root and above the weld. The ultrasonic examinations of the RVHP's have provided coverage of the weld root and the nozzle base material above the weld, (the region in which the presence of a circumferential flaw could result in ejection) for essentially 100% of the weld length for most nozzle penetrations. Based on a review of circumferential flaws located above the weld root detected to date by Framatome ANP, the coverage obtained at St. Lucie provides reliable assurance of the detection of the safety significant circumferential flaws above the weld root. There are 2 nozzles with less than 100% coverage above the weld but the coverage was 290 and 336 degrees.

The reason for the lack of coverage is postulated to be geometrical effects having to do with weld shrinkage and transducer blade fit/interference. This explains to some extent the lift-off at the bottom and excellent UT coverage above the weld. Nozzle 2 had incomplete coverage above the weld over a 24 degree area. Nozzle 2 did not allow blade probe entry over that range. The clearance was not large enough. It is speculated that there may be guide funnel misalignment over that range due to local bending. A flaw tolerance evaluation was performed using WCAP-15945, "Structural Integrity Evaluation of Reactor Vessel Upper Head Penetrations to Support Continued Operation: St Lucie Unit 1." From Figure 6-21 of WCAP-15945 and assuming a 180° circumferential flaw (larger than the area of lack of coverage) as the starting point it would take an additional 30 EFPY (51 EFPY – 21 EFPY) to grow from a 180° circumferential flaw to a structural limiting circumferential flaw size of 330° where ejection could

occur. Assuming an axial flaw was in the area of non coverage the significant event would be leakage followed by wastage and initiation of an OD circumferential flaw. The circumferential flaw is covered above and the leakage and wastage is addressed by the performance of the VT. There is no structural significance to an axial flaw since the stresses within ~1" of the weld quickly reduce to compressive or below a stress that a flaw will propagate by PWSCC in the interference region as detailed in WCAP-15945. This evaluation provides the required assurance of structural integrity.

It was originally suspected that four nozzles might not be accessible for ultrasonic examination based on knowledge that these funnels had been bent. Only two guide funnels (Nos. 68 and 17) were removed for this reason, and rotating UT was performed successfully. No defects were noted.

The examination scope was to include the material starting from approximately 2" above the weld down to the bottom end (to the maximum extent possible) of the respective penetration. The ICIs all attained this distance. The remainder of the nozzles attained heights in the range of 0.66 to > 2 inches above the uphill side of the weld. Only 3 penetrations attained an examination distance of less than 1 inch above the weld.. WCAP-15945 shows that stresses are much higher near the attachment weld than at 0.5 inch below or above it. Therefore, if the 0.5 inch is covered, the area of highest concern has been evaluated.

Conclusions:

1. There were no indications of leakage or cracking shown by any of the examination methods performed.
2. Leak path examination has only limited application for PSL 1
3. The reduced examination coverage issues do not preclude FPLs ability to determine structural integrity and freedom from cracking at or above the penetration to head weld
4. There were four interim dispositions to resolve the cutting of guide sleeves and examination and restoration of penetrations 17 and 68. These are included as Attachments 1 through 4 of this condition report.

Corrective actions to address immediate condition:

None required. A 30-day response is required by Bulletin 2002-02 and PMAI 02-09-037 has been issued to track it.

References:

1.WCAP-15945, "Structural Integrity Evaluation of Reactor Vessel Upper Head Penetrations to Support Continued Operation :St Lucie Unit 1"

2. L-2002-185 Response to NRC Bulletin 2002-02, Reactor Pressure Vessel Head Penetration Nozzle Inspection Programs, Sept 11, 2002

Preparer: SA COLLARD / [signature] Date: 10/15/02
Print Signature

Reviewed: T.F. SKIBA / [signature] Date: 10/15/02
Print Signature

Approved: RD GIL / [signature] Date: 10/15/02
Print Signature

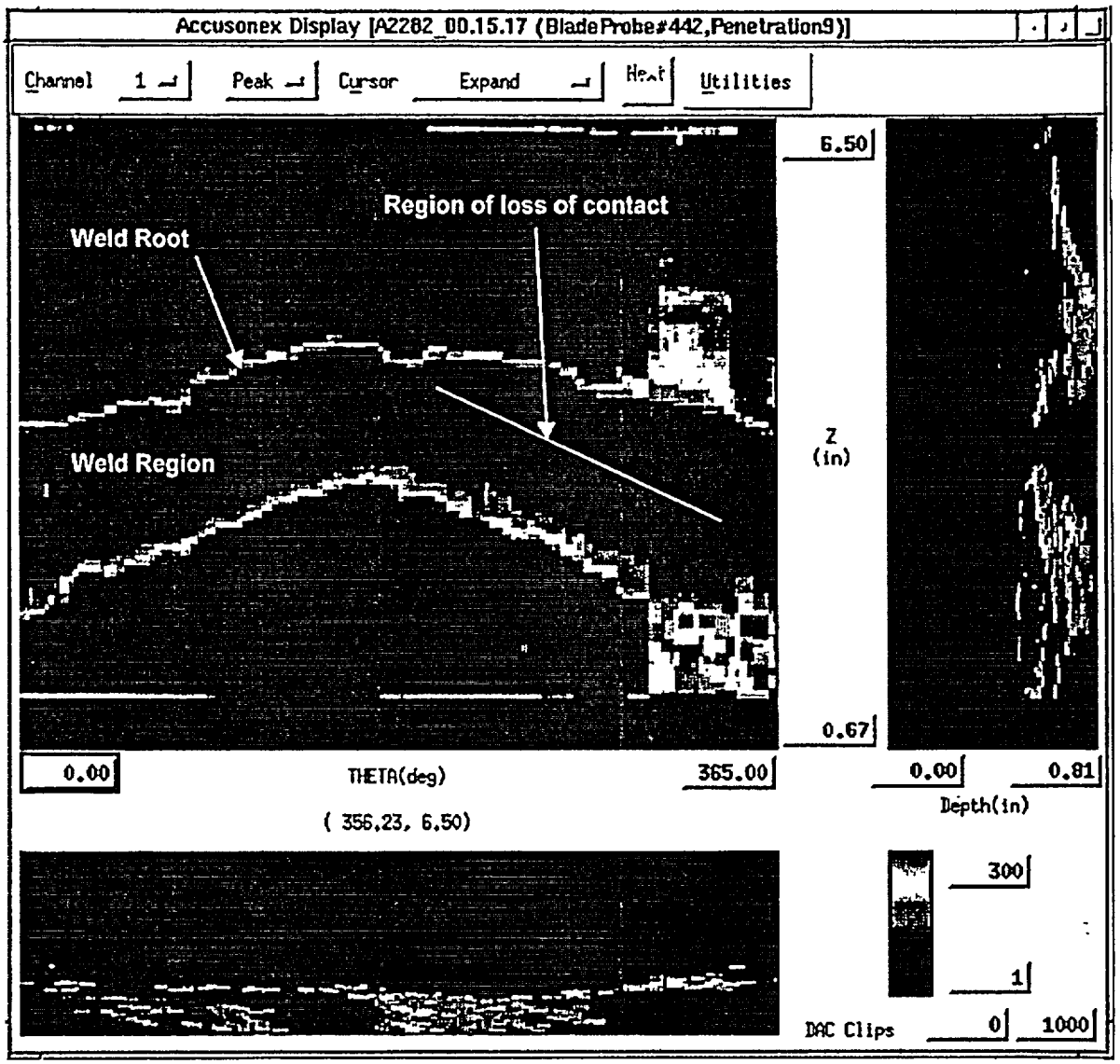
Accusonex Display [A2282_00.15.17 (BladeProbe#442,Penetration9)]
Channel
1
Peak
Cursor
Expand
Utilities
Region of loss of contact
Weld Root
Weld Region
6.50
Z
(in)
0.67
0.00
THETA(deg)
365.00
(356.23, 6.50)
0.00
0.81
Depth(in)
300
1
DAC Clips
0
1000

Figure 1

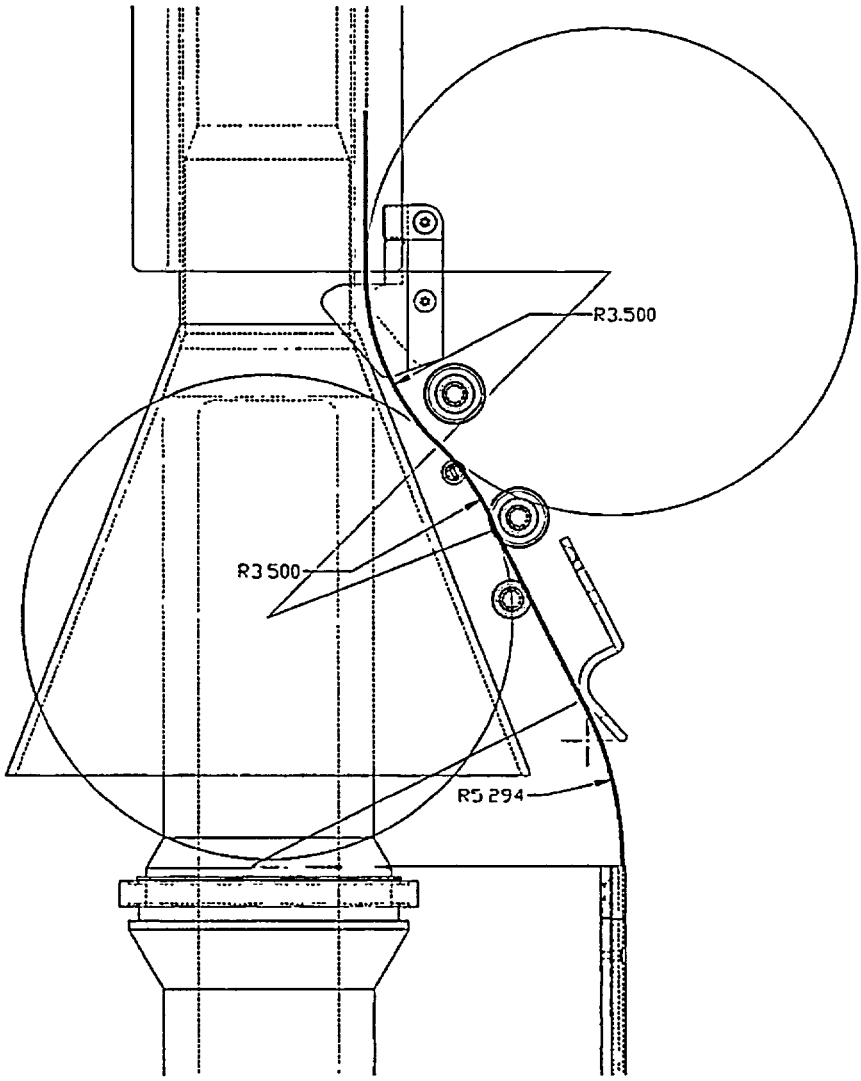

Figure 2

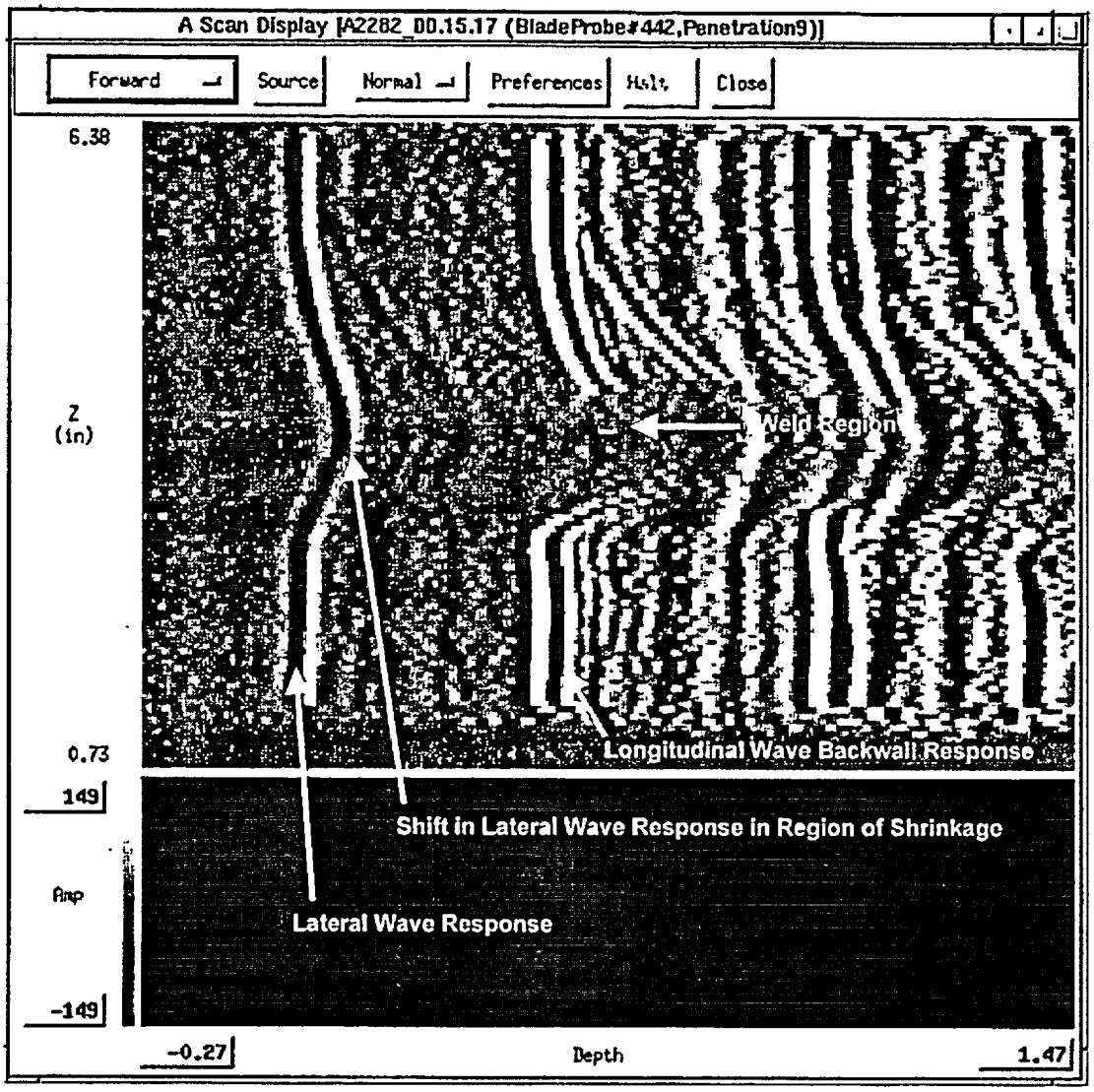
A Scan Display [A2282_00.15.17 (BladeProbe#442,Penetration9)]
Forward
Source
Normal
Preferences
Close
6.38
Z
(in)
0.73
Weld Region
Longitudinal Wave Backwall Response
149
Amp
-149
Shift in Lateral Wave Response in Region of Shrinkage
Lateral Wave Response
-0.27
Depth
1.47

Figure 3

Table 1

CEDM	Extent of UT Coverage in RVHP Nozzle Material						Leak Path Data	VT Coverage	
Pen #	Min. Distance Above Weld Root	Coverage Above Weld Root (Theta)	Coverage @ Weld Root (Theta)	Weld Region Coverage (Theta)	Below Weld Coverage (Theta)	Comments	Determination Possible?	VT Sat	VT Comments from CR02-2439
1	1.90	360	360	85	360	lack of coverage from 76 to 360	Yes	**SAT**	
2	1.60	**336**	**336**	285	336	lack of coverage in weld region @ 296-360	No	**See CR02-2439**	4) Insulation Partial (50%) quadrant 'D' (see video) 'A', 'B' and 'C' are SAT
3	3.27	360	360	265	360	lack of coverage from 102 to 177	Yes	**SAT**	
4	1 60	360	360	152	360	lack of coverage in weld from 208 to 360	No	**SAT**	Clear line with closer view on video, No interference
5	1.90	360	360	360	360		Yes	**SAT**	4) Tie wire, No interference
6	2.45	360	360	360	360		No	**SAT**	
7	1.97	360	360	360	360		Yes	**SAT**	No interference
8	1.60	360	360	218	360		No	**SAT**	4) Tie wire Clearer view seen on video, No interference
9	1.92	360	360	224	360	weld region lack of coverage from 199 to 336	Yes	**SAT**	
10	1.92	360	360	147	153	lack of coverage @ 0-81 & 228-360	No	**SAT**	
11	2.06	360	**286**	165	264	lack of coverage @ 0-90 & 255-360	Yes	**SAT**	
12	1.96	360	360	30	148	lack of coverage @ 0-162 & 191-360	No	**SAT**	
13	2.10	360	360	179	215	lack of coverage @ 0-88 & 267-360	No	**SAT**	
14	1.76	360	**280**	138	194	lack of coverage @ 0-82 & 220-360	No	**SAT**	
15	1.90	360	360	132	225	lack of weld coverage @ 0-98 & 230-360	No	**SAT**	
16	2.13	360	360	235	203	lack of coverage @ 0-69 & 304-360	No	**SAT**	
17	7.80	360	360	360	360	Rotating UT Data-guide sleeve removed	Yes	**SAT**	
18	1.99	360	360	117	196	lack of coverage @ 0-87 & 204-360	Yes	**SAT**	
19	1.13	360	360	118	169	lack of coverage @ 0-125 & 243-360	No	**SAT**	
20	1 99	360	360	121	175	lack of coverage @ 0-113 & 234-360	No	**SAT**	No debris - penetration stain, No interference
21	1.95	360	360	118	140	lack of coverage @ 0-115 & 233-360	No	**SAT**	reverified SAT on video, No interference
22	2.17	360	360	195	215	lack of coverage @ 0-47 & 242-360	No	**SAT**	4) O-ring No interference noted, No interference
23	2.17	360	360	270	270	lack of coverage @ 0-90	Yes	**SAT**	
24	1.77	360	360	194	218	lack of coverage @ 0-96 & 290-360	No	**SAT**	
25	1.78	360	360	140	154	lack of coverage @ 0-99 & 239-360	No	**SAT**	Video quality good, No interference
26	1.66	360	360	124	194	lack of coverage @ 0-93 & 217-360	Yes	**SAT**	
27	1.43	360	360	134	134	lack of coverage @ 0-138 & 272-360	No	**SAT**	4) Paper No obstruction, No interference
28	1.35	360	360	183	183	Rescan - Limited regions @ 0-75 & 258-360	No	**SAT**	4) Paper Paper not obstructing view on video, No interference

Table 1

CEDM	Extent of UT Coverage in RVHP Nozzle Material						Leak Path Data	VT Coverage	
Pen #	Min Distance Above Weld Root	Coverage Above Weld Root (Theta)	Coverage @ Weld Root (Theta)	Weld Region Coverage (Theta)	Below Weld Coverage (Theta)	Comments	Determination Possible?	VT Sat	VT Comments from CR02-2439
29	2.16	360	360	180	153	lack of coverage @ 0-69 & 249-360	No	SAT	
30	2.08	360	360	192	192	lack of coverage @ 0-81 & 273-360	Yes	SAT	
31	1.66	360	360	217	205	lack of coverage @ 0-96 & 313-360	No	SAT	
32	2.00	360	360	168	190	lack of coverage @ 0-96 & 288-360	No	SAT	Chips, No interference
33	1.90	360	275	145	145	lack of coverage @ 0-81 & 226-360	No	SAT	Good video quality, no interference
34	1.77	360	360	105	160	lack of coverage @ 0-72 & 177-360	No	SAT	4) Paper chips - No interference
35	1.96	360	360	140	155	lack of coverage @ 0-89 & 229-360	No	SAT	No evidence of masking by debris, no interference
36	2.13	360	360	141	177	lack of coverage @ 0-121 & 262-360	No	SAT	
37	1.92	360	360	139	139	lack of coverage @ 0-115 & 254-360	No	SAT	
38	1.80	290	290	130	173	lack of coverage @ 0-88 & 216-360	No	SAT	
39	1.98	360	360	133	130	lack of coverage @ 0-130 & 263-360	Yes	SAT	
40	1.27	360	360	202	182	lack of coverage @ 0-67 & 269-360	No	SAT	
41	1.94	360	360	207	181	lack of coverage @ 0-90 & 297-360	No	SAT	
42	2.00	360	360	143	217	lack of coverage @ 0-96 & 239-360	Yes	SAT	
43	1.88	360	360	121	174	lack of coverage @ 0-121 & 242-360	Yes	SAT	
44	1.34	360	360	157	166	lack of coverage @ 0-130 & 287-360	No	SAT	No interference
45	2.30	360	360	143	159	lack of coverage @ 0-128 & 271-360	No	SAT	
46	2.25	360	360	188	188	lack of coverage @ 0-81 & 253-360	No	SAT	
47	2.37	360	285	134	134	lack of coverage @ 0-127 & 261-360	Yes	SAT	
48	1.70	360	360	360	319	below weld coverage limited from 0-41	Yes	SAT	
49	2.21	360	360	134	134	lack of coverage @ 0-114 & 248-360	Yes	SAT	
50	2.66	360	360	148	203	lack of coverage @ 0-93 & 241-360	Yes	SAT	
51	2.09	360	360	145	209	lack of coverage @ 0-84 & 229-360	No	SAT	No interference
52	2.50	360	360	177	294	lack of coverage @ 0-90 & 267-360	Yes	SAT	4) Washer, paper, No interference
53	2.50	360	360	152	145	lack of coverage @ 0-100 & 252-360	No	SAT	4) Paper, No interference
54	2.20	360	360	209	190	lack of coverage @ 0-99 & 308-360	No	SAT	4) Paper, No interference
55	1.10	360	360	360	360		No	SAT	
56	1.65	360	360	223	199	lack of coverage @ 0-93 & 316-360	No	SAT	
57	2 80	360	360	153	160	lack of coverage @ 0-115 & 268-360	No	SAT	4) Paper, No interference
58	1.00	360	360	150	170	lack of coverage @ 0-112 & 261-360	Yes	SAT	4) Lock washer, No interference
59	1.81	360	360	138	185	lack of coverage @ 0-119 & 257-360	No	SAT	
60	0 87	360	360	239	360	weld region lack of coverage from 0-83 & 281-319	No	SAT	

Table 1

CEDM	Extent of UT Coverage in RVHP Nozzle Material						Leak Path Data	VT Coverage	
Pen #	Min. Distance Above Weld Root	Coverage Above Weld Root (Theta)	Coverage @ Weld Root (Theta)	Weld Region Coverage (Theta)	Below Weld Coverage (Theta)	Comments	Determination Possible?	VT Sat	VT Comments from CR02-2439
61	0 66	360	360	244	360	weld region lack of coverage from 0-67 & 280-329	No	SAT	
62	1.80	360	360	177	188	lack of coverage @ 0-103 & 280-360	Yes	SAT	4) Bolt (Removed)
63	1.92	360	360	204	204	lack of coverage @ 0-83 & 287-360	No	SAT	
64	2 07	360	360	156	188	lack of coverage @ 0-88 & 276-360	No	SAT	4) Paper 4) washer, No interference
65	1.76	360	360	178	167	lack of coverage @ 0-83 & 261-360	No	SAT	4) Paint chips 4) Paint chips, wire, No interference
66	1.42	360	360	360	360		No	SAT	
67	0 90	360	360	224	201	lack of coverage @ 0-77 & 301-360	No	SAT	
68	8 00	360	360	360	360	Rotating UT Data-guide sleeve removed	Yes	SAT	
69	1.90	360	360	175	204	lack of coverage @ 0-70 & 245-360	Yes	SAT	
70-ICI	4 33	360	360	360	N/A	Max. extent of exam achieved without limitations	Yes	SAT	4) Allen wrench REMOVED
71-ICI	4 30	360	360	360	N/A	Max. extent of exam achieved without limitations	Yes	SAT	4) Paper REMOVED
72-ICI	5 67	360	360	360	N/A	Max. extent of exam achieved without limitations	Yes	SAT	4) Insulation REMOVED, boron migrated to quadrant
73-ICI	4.20	360	360	360	N/A	Max. extent of exam achieved without limitations	Yes	SAT	4) Insulation chips REMOVED
74-ICI	3.35	360	360	360	N/A	Max. extent of exam achieved without limitations	Yes	SAT	4) Insulation chips REMOVED
75-ICI	4.80	360	360	360	N/A	Max. extent of exam achieved without limitations	Yes	SAT	4) socket REMOVED
76-ICI	3.76	360	360	360	N/A	Max. extent of exam achieved without limitations	Yes	SAT	
77-ICI	5 00	360	360	360	N/A	Max. extent of exam achieved without limitations	Yes	SAT	4) Insulation, paint chips REMOVED
Vent	1.35	360	360	360	N/A	Max. extent of exam achieved without limitations	N/A	SAT	4) Insulation, chips, No interference

Notes Below:

Pen #		
2	Note:	Lack of weld root coverage for 24 degrees due to obstuction on inside surface of nozzle
11	Note:	Lack of weld root coverage for 74 degrees due to poor blade probe coupling to inside surface of nozzle
14	Note:	Lack of weld root coverage for 80 degrees due to poor blade probe coupling to inside surface of nozzle
17 Blade	Note:	No Blade Probe UT Data due to Obstructions; Removing Thermal Sleeves for Rotating UT Probe
33	Note:	Lack of weld root coverage for 85 degrees due to poor blade probe coupling to inside surface of nozzle
38	Note:	Lack of weld root coverage for 70 degree due to obstuction on inside surface of nozzle
47	Note:	Lack of weld root coverage for 75 degrees due to poor blade probe coupling to inside surface of nozzle
68 Blade	Note:	No Blade Probe UT Data due to Obstructions; Removing Thermal Sleeves for Rotating UT Probe
Multiple	Visual Note:	4 = Identified part/parts as reported in PSL-1 CR02-2439

NPS

SEVERITY LEVEL

A. ☐ 3 working days
B. ☐ 10 calendar days
C. ☐ 30 calendar days
D. ☒ Other

CONDITION REPORT

Due Date: 10/13/02

CR NO. 02-2439

PTN ☐ PSL ☑ JB ☐

PAGE 1 OF 6

CR Administrator

ORIGINATOR

1. SYSTEM #/NAME 001 / RCS UNIT 01
COMPONENT NAME REACTOR HEAD
DISCOVERY DATE/TIME 10/9/02
CR ORIGINATOR RUDY GIL

COMPONENT ID Rx
LOCATION (BLDG/ELEV) RCB / 62' EL
EVENT DATE/TIME 10/9/02
DEPT/PHONE ENG / 7249

2. (ATTACH ADDITIONAL PAGES AS NECESSARY)
(A) CONDITION DESCRIPTION

DURING VISUAL INSPECTION OF REACTOR HEAD TOP SURFACE AT PENETRATION LOCATIONS, DEBRIS WAS IDENTIFIED AT OR NEAR THE PENETRATIONS.

(B) CAUSE

UNKNOWN

(C) IMMEDIATE ACTIONS TAKEN

LOCATION OF DEBRIS WAS CAPTURED ON VIDEO FOR DISPOSITION

(D) RECOMMENDED ACTIONS/SUGGESTED ASSIGNEE

DISPOSITION AND/OR REMOVE DEBRIS TO ENSURE THROUGH HEAD SURFACE/PENETRATION INTERFACE INSPECTION.

(E) ADDITIONAL REFERENCES (PWO Number(s), Procedure Numbers(s), Persons Contacted, etc)

SERGIO VALDES
FRAMATOME PROCEDURE 6015743A

3. ORIGINATOR REQUESTS COPY OF CLOSED CONDITION REPORT ☑ YES ☐ NO

SUPERVISOR NOTICATION: J. Mulso / [signature] (PRINT / SIGNATURE) ☐ N/A

NPS

4. OPERABILITY/REPORTABILITY DETERMINATION:
☐ A. OPERABILITY ASSESSMENT REQUIRED (3 WORK DAYS)
☐ B POTENTIALLY REPORTABLE (ATTACH ENS WORKSHEET, IF USED)
☐ C NO OPERABILITY CONCERN/NOT REPORTABLE
☑ D OTHER

OUTAGE RELATED? ☑ YES ☐ NO
MODE HOLD? ☑ YES ☐ NO
FOR ENTRY INTO MODE 4

COMMENTS:

NPS/VPNE Weller / [signature] (PRINT / SIGNATURE) DATE/TIME 10/10/02 / 0455

VICE PRES., NUCLEAR ENGINEERING

PGM

5. CONDITION REPORT ASSIGNED TO: Eng.

COMMENTS:

☐ Significance Level 1 - Root Cause Analysis
☐ Significance Level 2 - Apparent Cause
☑ Significance Level 3 - Correction Only
☐ PGM Closeout
☐ Trend Only
☐ Potential Repeat Condition

PGM/VPNE [signature] for Rose DATE 10/10/02

CONDITION REPORT # 02-2439 PAGE 2 OF 6

ENG/SCE — N/A

6. NONCONFORMANCE (NCR): ☐ YES ☑ NO
FUNCTIONAL FAILURE: ☐ YES ☑ NO
BY: W.B. Neff (PRINT), W.B. Neff (SIGNATURE)

ASSIGNEE

7. INVESTIGATION ANALYSIS, CORRECTIVE ACTIONS, GENERIC IMPLICATIONS, DISPOSITION DETAILS, WORK INSTRUCTIONS (ATTACH ADDITIONAL PAGES AS NECESSARY)

See Pages 4, 5, & 6.

MODE RESTRICTION RELEASED 10/15/02

CAUSE CODES 1) D3 2) D5* 3) _____ *ASBESTOS, LIMITED ACCESS

8. DOCUMENTATION INITIATED: (N/A if not applicable)

PWO N/A
RTS
PMAI

EVALUATION REQUIRED FOR:

EQ	☐ YES	☑ NO
10CFR50.59	☐ YES	☑ NO
10CFR21	☐ YES	☑ NO
ASME SECTION XI	☐ YES	☑ NO

9. NCR DISPOSITION. N/A ☒ REWORK ☐ REPAIR ☐ USE AS-IS ☐ OTHER ☐

REVIEW/APPROVAL

10. DISPOSITION SIGNATURES: (N/A if not applicable)

PREPARER Glenn P. Alexander (PRINT), (SIGNATURE), 691-2994 (DEPT PHONE) DATE 10/15/02

OTHER DEPT CONCUR N/A (PRINT), _____ (SIGNATURE) DATE _____

ANII/SEC XI REVIEWER N/A (PRINT), _____ (SIGNATURE) DATE _____

PNSC/FRG REVIEW ☐ YES ☒ NO

DEPT HEAD RDGIL (PRINT), _____ (SIGNATURE) DATE 10/15/02

NUCLEAR NETWORK ☐ YES ☒ NO MODE RESTRICTION RELEASED ☒ YES ☐ NO ☒ N/A

FRG/PNSC REVIEW (if required in Block 10) MTG# N/A CHAIRMAN _____ DATE _____

APPROVAL:
PGM/VPNE/MGR _____ DATE 10/15/02

ADMIN

EVENT CODES: 1) FC 2) ~~FC~~ FJ 3) D8 CORNERSTONE AFFECTED: Barrier

APPENDIX I CR 02-2439 PG 3 of 6

CONDITION REPORT INDEPENDENT REVIEW CHECKLIST

(Page 1 of 1)

This checklist is provided as an aid in dispositioning and reviewing Condition Reports. Personnel preparing the CR disposition should review the checklist to ensure that CR program requirements are met. Personnel performing the independent review shall verify that required CR disposition attributes have been addressed by completing the applicable portions of the checklist. CRs that have not addressed all program requirements shall be corrected prior to closeout.

ALL CONDITION REPORTS:	YES	NO	N/A
ENSURE THAT:			
All blocks and spaces are filled in	✓		
All pages identify the CR, attachment, and page number (consecutively)	✓		
The disposition addresses the identified condition	✓		
The disposition addresses requirements specified in Block 5 by the PGM	✓		
Concurrence has been obtained by all affected departments (note: Planning concurrence required for open WO used to track corrective action)	✓		
Cause codes are appropriate	✓		
Open corrective actions are tracked by PMAI or WO and traceable to the CR	✓		✓
Open Work Orders properly reference the CR and are attached	✓		✓
50.59 screening has been completed for NCR use-as-is or repair dispositions			✓
IST and ANII review have been obtained if required			✓
Corrective Actions are timely based upon the significance of the event	✓		

SIGNIFICANCE LEVEL 1 CONDITION REPORTS:	YES	NO	N/A
ENSURE THAT:			
Root Cause Analysis completed in accordance with procedure requirements			
If RCA not completed, then PMAI assigned for completion (example: a detailed metallurgical analysis is necessary to determine root cause) NOTE: VP approval Req'd			
The problem is clearly stated			
The data and evidence considered is identified			
Industry Operating Experience is appropriately considered			
Potential failure modes are identified, if applicable			
Tools and techniques used are appropriately selected and identified			
Root cause and contributing causes are identified and appear appropriate			
Corrective actions address the root cause and contributing causes			
Corrective actions are timely and complete			
Generic implications are addressed, and corrective actions assigned as appropriate			
Monitoring and follow-up is addressed to ensure that corrective actions are effective			N/A

SIGNIFICANCE LEVEL 2 CONDITION REPORTS:	YES	NO	N/A
ENSURE THAT:			
The disposition addresses the problem identified in Block 2			
The apparent cause of the problem is clearly identified			
Corrective actions address the immediate problem and prevent recurrence			
Generic implications are adequately addressed			N/A

SIGNIFICANCE LEVEL 3 CONDITION REPORTS:	YES	NO	N/A
ENSURE THAT:			
Corrective actions adequately address the immediate concern			

REPEAT CONDITION REPORTS:	YES	NO	N/A
ENSURE THAT:			
The disposition clearly identifies the CR as a Repeat Condition and evaluates previous occurrences, or provides an adequate basis for determination that a Repeat Condition does not exist			✓
The disposition addresses ineffectiveness of previous corrective actions			✓
The disposition identifies how additional corrective actions will prevent recurrence			✓

Review performed by: [signature] Print / Signature Ext 4175 Date: 10/15/02

END OF APPENDIX I

7.DISPOSITION

Condition Description:
During visual inspection of the reactor vessel head top surface at the penetrations, debris was identified.
Investigation/Analysis:

This CR was generated to address the concern that the debris around the penetration to RPV head interface has the potential to mask evidence of leakage. The debris consists of very small washers, paint chips, dirt, and insulation. Although the examiners performing the examination had accepted the examination and the condition of the areas examined, an additional review was conducted to address this concern.

In an effort to quantify the amount of debris, a matrix was generated (see pages 5 & 6) listing the 78 penetrations. For examination tracking purposes, each penetration was divided into four quadrants. The matrix has a separate column for each of the four examination quadrants. Each quadrant was assigned a number from 1 through 3, to quantify the amount of debris in its vicinity (1 for light or no debris; 2 for medium; and 3 for heavy). A number 4 was assigned to specifically identifiable debris (e.g., insulation, washers, bolts, or paper). The number 5 was to be used for boron leakage from the penetration and 6 for boron leakage from above. No areas were assigned a number 3 or 5.

All quadrants, or areas of examination, which received a 2 or higher were re-evaluated. The evaluation consisted of a review of the still pictures and the video footage for each quadrant affected. The evaluation was conducted by Framatome personnel and overseen by qualified FPL personnel. In total, 58 of the 78 penetrations were re –visited in whole or in part. Of the 58, 10 penetrations were identified as needing additional cleaning or obstruction removal. The obstructions were removed, and re-examinations were conducted at 9 of these 10 locations.

A re-examination of Penetration No. 2 was attempted, but removal of the insulation blocking a portion of quadrant D failed, due too poor accessibility. However, based on the inspection of the accessible portions of this quadrant, and adjacent areas, there is reasonable assurance that no leakage or wastage exists.

Based on the results of the initial examination and the re-evaluation of specific penetrations and quadrants, the head is considered clean enough to facilitate a meaningful examination. The examination supports the conclusion that no wastage of the RPV head steel is present and none of the 78 reactor vessel head penetrations are leaking. This conclusion is further supported by the results of the volumetric examinations that were conducted for each penetration. The results of the volumetric examinations are discussed in detail in CR 02-2149.

SPECIFIC CORRECTIVE ACTIONS
No additional action required

FRAMATOME ANP

St. Lucie RPV Head Inspection - October 2002

10/15/2002 1430 Revision 1

Legend: 1 = light to no debris; 2 = medium debris; 3 = heavy debris; 4 = identified part/parts; 5 = boron leakage - penetration; 6 = boron leakage above

NOZZLE #	Quad "A"	Quad "B"	Quad "C"	Quad "D"	Leak Path	Video	COMMENTS
1	1	2	2	1			
2	2	2	1	1,4			4) Insulation Partial (50%) quadrant 'D' (see video) 'A', 'B' and 'C' are SAT
3	1	2	1	2			
4	1	1	1	1			Clear view of interface on video, No interference
5	2	4	2,6	2			4) Tie wire, No interference
6	2	2	1	1			
7	1	1	2	1			No interference
8	1	1	1	2,4			4) Tie wire, Clearer view seen on video, No interference
9	1	1	2	2			
10	1	1	1	1			
11	1	1	1	1			
12	1	1	2	1			
13	2	1	1	1			
14	1	2	2	1			
15	2	2	1	1			
16	2	1	2	1			
17	1	1	1	1			
18	2	1	1	1			
19	1	1	1	1			
20	2	2	1	1			debris and stain on penetration, No interference
21	1	2	2	1			reverified SAT on video, No interference
22	1	2	2	1,4			4) O-ring No interference noted, No interference
23	1	1	1	1			
24	1	1	1	2			
25	2	2	1	1			Video quality good, No interference
26	1	1	1	1			
27	1	1,4	1	1			4) Paper, Not obstructing, No interference
28	1	1	2	1,4			4) Paper, Paper not obstructing view on video, No interference
29	1	1	1	1			
30	1	1	2	1			
31	1	1	1	2			
32	1	1	2	2			Chips, No interference
33	2	1	2	1			Good video quality, No interference
34	1	2,4	1	1			4) Paper chips - No interference
35	1	1	2	1			No evidence of masking by debris, No interference
36	1	1	1	1			

CR-2439
page 5 of 6

37	1	1	1	1			
38	1	1	1	1			
39	1	1	1	1			
40	1	1	1	1			
41	1	1	1	1			
42	1	1	1	1			
43	1	1	1	1			
44	1	1	2	1			No interference
45	1	2	1	1			
46	1	1	1	1			
47	1	1	2	1			
48	2	1	1	1			
49	1	1	1	1			
50	1	1	1	1			
51	1	2	1	1			No interference
52	1	2,4	1,4	1			4) Washer, paper, No interference
53	1	2	1	1			4) Paper, No interference
54	1	1	1	2,4			4) Paper, No interference
55	1	1	2	2			
56	2	1	1	2			
57	1,4	2	1	1			4) Paper, No interference
58	2,4	1	1	2,4			4) Lock washer, No interference
59	1	2	1	1			
60	1	1	1	1			
61	1	2	1	1			
62	1	2,4	2	1			4) Bolt (Removed) Re-examination Sat.
63	1	1	2	1			
64	1	2,4	2,4	1			4) Paper 4) washer, No interference
65	1	1	2,4	2,4			4) Paint chips 4) Paint chips, wire, No interference
66	1	1	1	2			
67	1	1	1	2			
68	1	1	1	1			
69	1	1	1	1			
70 ICI	1	2,4	2	2			4) Allen wrench REMOVED Re-exam sat
71 ICI	1,4	1	1	1			4) Paper REMOVED Re-exam Sat
72 ICI	1	1	1	4			4) Insulation REMOVED, Re-exam Sat
73 ICI	4	1	1	4			4) Insulation chips REMOVED Re-exam Sat
74 ICI	4	4	1	1			4) Insulation chips REMOVED Re-exam Sat
75 ICI	1,4	1	2	1			4) socket REMOVED Re-exam Sat
76 ICI	2	1	1	2			
77 ICI	2	4	4	1			4) Insulation, paint chips REMOVED Re-exam Sat
Vent Line	4	2	2	4	N/A		4) Insulation, chips, No interference

CR-2439
Page 6 of 6

NPS

SEVERITY LEVEL

A. ☐ 3 working days
B. ☐ 10 calendar days
C. ☒ 30 calendar days
D. ☐ Other

CONDITION REPORT

Due Date: 11-18-02

CR NO. 02-2517

PTN ☐ PSL ☒ JB ☐

PAGE 1 OF 3

CR Administrator

ORIGINATOR

1. SYSTEM #/NAME 001/RCS UNIT Ø1
COMPONENT NAME REACTOR
DISCOVERY DATE/TIME 10-12-02
CR ORIGINATOR PHIL BARNES

COMPONENT ID RX
LOCATION (BLDG/ELEV) RCB/62'
EVENT DATE/TIME 10-12-02
DEPT/PHONE ENG / 7249

2. (ATTACH ADDITIONAL PAGES AS NECESSARY)

(A) CONDITION DESCRIPTION

DURING A REVIEW OF THE ULTRASONIC (UT) DATA COLLECTED ON THE REACTOR HEAD VENT LINE NOZZLE PENETRATION, IT WAS DISCOVERED THAT THE ELECTRONIC DATA FILE(S) HAD BEEN REMOVED FROM THE ULTRASONIC DATA ANALYSIS COMPUTERS. THE ELECTRONIC UT DATA FILES ARE NO LONGER AVAILABLE FOR ANY FURTHER REVIEWS AND NO UT DATA PRINTOUTS CAN BE MADE FOR THE INSPECTION OUTAGE FINAL REPORT.

(B) CAUSE

HUMAN ERROR

(C) IMMEDIATE ACTIONS TAKEN

ENSURED OTHER UT DATA BACKED UP.

(D) RECOMMENDED ACTIONS/SUGGESTED ASSIGNEE

ASSIGN TO ENG/CSI

(E) ADDITIONAL REFERENCES (PWO Number(s), Procedure Numbers(s), Persons Contacted, etc)

F-ANP CR # 6018049 (ATTACHED)

3. ORIGINATOR REQUESTS COPY OF CLOSED CONDITION REPORT ☐ YES ☒ NO

SUPERVISOR NOTICATION: P.G. BARNES / PGB (PRINT / SIGNATURE) ☐ N/A

NPS

4. OPERABILITY/REPORTABILITY DETERMINATION:

☐ A. OPERABILITY ASSESSMENT REQUIRED (3 WORK DAYS)
☐ B POTENTIALLY REPORTABLE (ATTACH ENS WORKSHEET, IF USED)
☒ C NO OPERABILITY CONCERN/NOT REPORTABLE
☐ D OTHER

OUTAGE RELATED? ☐ YES ☒ NO
MODE HOLD? ☐ YES ☒ NO
FOR ENTRY INTO MODE

COMMENTS:

NPS/VPNE W.L. Parks / [signature] (PRINT / SIGNATURE) DATE/TIME 10/13/02 / 1045

VICE PRES., NUCLEAR ENGINEERING

PGM

5. CONDITION REPORT ASSIGNED TO: PROJECTS

COMMENTS:

☐ Significance Level 1 - Root Cause Analysis
☒ Significance Level 2 - Apparent Cause
☐ Significance Level 3 - Correction Only

☐ PGM Closeout
☐ Trend Only
☐ Potential Repeat Condition

PGM/VPNE [signature] DATE 10/14/02

CRs ARE QA RECORDS WHEN CLOSED PLEASE ENSURE ALL RESPONSES AND ATTACHMENTS ARE LEGIBLE

Rev 07/31/01

ENG/SCE

6. NONCONFORMANCE (NCR): ☐ YES ☒ NO
FUNCTIONAL FAILURE: ☐ YES ☒ NO
BY: CJ Wasik (PRINT) / [signature] (SIGNATURE)

N/A

ASSIGNEE

7. INVESTIGATION ANALYSIS, CORRECTIVE ACTIONS, GENERIC IMPLICATIONS, DISPOSITION DETAILS, WORK INSTRUCTIONS (ATTACH ADDITIONAL PAGES AS NECESSARY)

See Attachments 1, 2, and 3

CAUSE CODES: 1) ~~X2~~ C4 2) M1 3) Q4

8. DOCUMENTATION INITIATED. (N/A if not applicable)

PWO N/A
RTS N/A
PMAI PM02-11-003

EVALUATION REQUIRED FOR:

EQ	☐ YES	☒ NO
10CFR50.59	☐ YES	☒ NO
10CFR21	☐ YES	☒ NO
ASME SECTION XI	☐ YES	☒ NO

9. NCR DISPOSITION: N/A ☒ REWORK ☐ REPAIR ☐ USE AS-IS ☐ OTHER ☐

REVIEW/APPROVAL

10. DISPOSITION SIGNATURES: (N/A if not applicable)

PREPARER Dan Nowakowski (PRINT) / [signature] (SIGNATURE) Ext. 691-2908 (DEPT PHONE) DATE 11/4/02

OTHER DEPT CONCUR N/A (PRINT) / N/A (SIGNATURE) DATE N/A

ANII/SEC XI REVIEWER N/A (PRINT) / N/A (SIGNATURE) DATE N/A

PNSC/FRG REVIEW ☐ YES ☒ NO

DEPT HEAD R D Gil (PRINT) / [signature] (SIGNATURE) DATE 11/8/02

NUCLEAR NETWORK ☐ YES ☒ NO MODE RESTRICTION RELEASED ☐ YES ☐ NO ☒ N/A

FRG/PNSC REVIEW (if required in Block 10) MTG# N/A CHAIRMAN N/A DATE N/A

APPROVAL:

PGM/VPNE/MGR [signature] 11/19/02 [signature] DATE 11-20-02

ADMIN

EVENT CODES: 1) 2) 3) CORNERSTONE AFFECTED:

APPENDIX I CR 02-2517 PG 3 of 3

CONDITION REPORT INDEPENDENT REVIEW CHECKLIST

(Page 1 of 1)

This checklist is provided as an aid in dispositioning and reviewing Condition Reports Personnel preparing the CR disposition should review the checklist to ensure that CR program requirements are met Personnel performing the independent review shall verify that required CR disposition attributes have been addressed by completing the applicable portions of the checklist CRs that have not addressed all program requirements shall be corrected prior to closeout

ALL CONDITION REPORTS:			
ENSURE THAT:	YES	NO	N/A
All blocks and spaces are filled in	✓		
All pages identify the CR, attachment, and page number (consecutively)	✓		
The disposition addresses the identified condition	✓		
The disposition addresses requirements specified in Block 5 by the PGM	✓		
Concurrence has been obtained by all affected departments (note Planning concurrence required for open WO used to track corrective action)			✓
Cause codes are appropriate	✓		
Open corrective actions are tracked by PMAI or WO and traceable to the CR			✓
Open Work Orders properly reference the CR and are attached			✓
50 59 screening has been completed for NCR use-as-is or repair dispositions			✓
IST and ANII review have been obtained if required			✓
Corrective Actions are timely based upon the significance of the event			✓

SIGNIFICANCE LEVEL 1 CONDITION REPORTS			
ENSURE THAT:	YES	NO	N/A
Root Cause Analysis completed in accordance with procedure requirements			
If RCA not completed, then PMAI assigned for completion (example. a detailed metallurgical analysis is necessary to determine root cause) NOTE· VP approval Req'd			
The problem is clearly stated			
The data and evidence considered is identified			
Industry Operating Experience is appropriately considered			
Potential failure modes are identified, if applicable			
Tools and techniques used are appropriately selected and identified			
Root cause and contributing causes are identified and appear appropriate			
Corrective actions address the root cause and contributing causes			
Corrective actions are timely and complete			
Generic implications are addressed, and corrective actions assigned as appropriate			
Monitoring and follow-up is addressed to ensure that corrective actions are effective			

SIGNIFICANCE LEVEL 2 CONDITION REPORTS			
ENSURE THAT:	YES	NO	N/A
The disposition addresses the problem identified in Block 2	✓		
The apparent cause of the problem is clearly identified	✓		
Corrective actions address the immediate problem and prevent recurrence	✓		
Generic implications are adequately addressed			✓

SIGNIFICANCE LEVEL 3 CONDITION REPORTS:			
ENSURE THAT:	YES	NO	N/A
Corrective actions adequately address the immediate concern			

REPEAT CONDITION REPORTS·			
ENSURE THAT:	YES	NO	N/A
The disposition clearly identifies the CR as a Repeat Condition and evaluates previous occurrences, or provides an adequate basis for determination that a Repeat Condition does not exist			✓
The disposition addresses ineffectiveness of previous corrective actions			✓
The disposition identifies how additional corrective actions will prevent recurrence	✓		

Review performed by· R Scott Boggs R Scott Boggs Ext 694-4207 Date: 11-4-02
Print / Signature

END OF APPENDIX I

ENGINEERING DISPOSITION

Summary of Problem

On October 6, 2002, an Ultrasonic (UT) examination of the PSL-1 Reactor Vessel Head vent line penetration was performed by Framatome personnel. Upon completion of the data acquisition, analysis of the raw electronic UT data was performed, witnessed by the FPL UT Level III, and no reportable indications were identified. The results of the examination were documented in accordance with procedure 54-ISI-137-00. During an additional review of the UT data collected from the vent line penetration to determine the extent of coverage achieved during the examination, it was discovered that the electronic raw data file(s) from the vent line had been erased inadvertently from the UT data analysis computer hard drive. The electronic raw data files from all other RVH penetrations were verified to exist. The electronic raw data files from the vent line examination are no longer available for further reviews and no additional data printouts can be created for the Reactor Head inspection final report.

Safety Classification: ☐ **Safety Related** ☐ **Quality Related** ☒ **Not Nuclear Safety**

This CR is Not Nuclear Safety related because the QA documentation requirements of the Framatome procedure for the Remote Ultrasonic Examination of Reactor Vessel Head Vent Line Penetrations (54-ISI-137-00) were met prior to the inadvertent erasure of the raw electronic data.

UFSAR and Technical Specification sections reviewed:

PSL-1 UFSAR Chapter 4

Apparent cause of the condition:

The UT examination of the Reactor Vessel Head Vent Line penetration utilized 2 computers that were connected. One computer was used to control and store, temporarily, the raw electronic UT data during the acquisition process. Upon completion of the acquisition process, the electronic raw data was copied to the analysis computer and evaluated for acceptability by a data analyst. Upon the determination of acceptance of the data by the analyst, the acquisition computer was released and utilized to collect data from the next penetration. At this point, raw electronic data was located on both the acquisition and analysis computers. The analysis of the vent line raw electronic UT data was performed, witnessed by the FPL UT Level III, and no reportable indications were identified. The results of the examination were documented as required by Framatome procedure 54-ISI-137-00. Routinely, the hard drive of the acquisition computer containing the raw electronic examination data reaches it's capacity and previous collected data is deleted by the acquisition personnel. In this case, the acquisition operator inadvertently deleted the raw electronic data from both the acquisition and analysis computers simultaneously. Software controls were not in place to ensure that data acquisition personnel could not inadvertently delete data from both the acquisition and analysis computers simultaneously.

Corrective actions to address immediate condition:

Immediate actions consisted of verification of all other raw electronic data files for the Reactor Vessel Head penetration examinations and copying of the data files to an alternate medium. Control practices for raw electronic data was reinforced with acquisition and analysis personnel.

Generic implications:

The computer system, supplied by Framatome, is used in the performance of the Automated UT Inspections of the Reactor Head Penetrations (RHP) only. This was the first examination activity utilizing this system at an FPL facility. The same system is utilized at other utilities for RHP examinations and is scheduled for use at PTN during the Spring 2003 examinations. Framatome has identified that the deficiency is applicable to other contracts (ref. Framatome CR#6018049, Rev#0), will be added to their lessons learned database and will be incorporated into future Task Deployment Letters (TDL).

Corrective actions to prevent recurrence:

Framatome has committed in their CR disposition to upgrade their system by creating a software utility to automatically backup data from the analysis computer and clean up the acquisition at the same time (ref. Framatome CR#6018049, Rev#0). The utility created will keep track of any new acquisition and ask the analyst for confirmation before cleaning the disk or backing up data. A scheduled completion date of 1/31/03 has been identified as part of the CR disposition for closure. PMAI PM02-11-003 has been issued to CSI to track completion of this action.

References:

Framatome CR# 6018049 Rev#0

Framatome Procedure 54-ISI-137-00, "Remote Ultrasonic Examination of Reactor Vessel Vent Line Penetrations"

Framatome Procedure 54-ISI-100-09, "Remote Ultrasonic Examination of Reactor Vessel Penetrations"

Framatome Letter to Final Report, From Kent C. Gebetsberger-Framatome ANP UT Level III, Dated 10/17/02

Preparer: Don Nowakowski / Don Nowakowski Date: 11/4/02
Print Signature

Reviewed: R. Scott Boggs / R. Scott Boggs Date: 11-4-02
Print Signature

FRAMATOME ANP

WORK INSTRUCTION WI-31 CONDITION REPORT

Attachment 2 CR 02-2517

CR# 6018049 REV.# 0 PAGE 1 OF 2

SECTION 1 INITIATION

CONTRACT 1220929 CUSTOMER/SITE/UNIT: FPL / St. Lucie / 1

TECHNICAL DOCUMENT#. 54-ISI-100-09 SEQUENCE/STEP #. Sec. 10.0

DESCRIPTION OF CONDITION

During a review of the ultrasonic (UT) data collected on the St. Lucie, Unit 1 vent line nozzle penetration, it was discovered that the electronic data file(s) had been removed from the ultrasonic data analysis computers. The electronic UT data files are no longer available for any further reviews and no UT data printouts can be made for the inspection outage final report

All data files for the vent line nozzle penetration had been analyzed by Framatome ANP UT data analysis personnel prior to the removal of the electronic files, which resulted in no recordable indications

INITIATOR. Michael Webster (NAME) DATE/TIME: 10/12/02

PRIORITY ☐ 1 ☐ 2 ☒ 3

SENT TO. Bob Williams (NAME) REQUESTED COMPLETION DATE: 1/31/2003

☐ FOR TRENDING/TRACKING ONLY – NO RESPONSE REQUIRED

SECTION 2 IMPLICATION RESOLUTION/DISPOSITION/PREVENTATIVE ACTION

IMPLICATION.: ☐ SAFETY-RELATED ☒ ASME CODE ☐ NON SAFETY-RELATED ☐ NON QA PROGRAM ☐ IMPROVEMENT ☐ OTHER:

TYPE ☐ CUSTOMER "AS FOUND" ☒ INTERNAL ITEM ☐ OTHER: ☐ CUSTOMER COMPLAINT

NOTIFICATION/RECOMMENDED RESOLUTION/DISPOSITION.

None As stated above, all data files for the vent line nozzle penetration had been analyzed by Framatome ANP UT data analysis personnel prior to the removal of the electronic files, which resulted in no recordable indications.

CAUSE CODE: Equipment

PREVENTATIVE ACTION ☒ REQUIRED ☐ NONE REQUIRED

To avoid this kind of problem in the future, we can upgrade our system by creating a daemon utility to automatically backup data from the analysis computer and clean up the acquisition computer at the same time. This utility needs to keep track of any new acquisition and ask the analyst for confirmation before cleaning the disk or backing up data. After selecting the analysis computer in use and when starting the acquisition, this computer needs to be automatically mounted on the acquisition with a confirmation message. The primary backup can be checked to avoid any nfs connection disk. This will make impossible to select anything but the local hard drive or at least display a warning.

APPLICABLE TO OTHER CONTRACTS: ☒ YES ☐ NO

RESOLUTION.

This will be added to the lessons learned database and will be incorporated into future TDLs.

AFFECTED ORGANIZATION: NDE Services SCHEDULED COMPLETION DATE. 1/31/03

RESPONSIBLE INDIVIDUAL/ENGINEER: C.E. Wenn for C. Ranson (SIGNATURE) Craig Ranson (NAME) 10/17/02 (DATE)

ACTION REQUIRED BY: ☐ CUSTOMER ☐ QA ☐ OTHER

Attachment 2
CR02-2517

FRAMATOME ANP

WORK INSTRUCTION WI-31
CONDITION REPORT CONTINUATION

CR# 6018049 | REV.# 0 | PAGE 2 OF 2

SECTION 3 APPROVAL/ACKNOWLEDGEMENT/CONCURRENCE

	(SIGNATURE)	(NAME)	(DATE)
REVIEWER:	[signature]	J Philippe CARMONA	10-17-02.
UNIT MANAGER:	Robert F. Cole	Robert F. Cole	10-17-02
CUSTOMER (if required) ☐ APPROVAL ☐ ACKNOWLEDGEMENT		N/A	
QA Approval (If required)		N/A	
OTHER (if required) ☐ APPROVAL ☐ ACKNOWLEDGEMENT ☐ CONCURRENCE		N/A (NAME/TITLE/ORGANIZATION)	

SECTION 4 ENGINEERING EVALUATION/NOTIFICATION/ACTIONS COMPLETED

THE ACTIONS SPECIFIED IN SECTION 2 HAVE BEEN COMPLETED.

	(SIGNATURE)	(NAME)	(DATE)
VERIFIED BY:		N/A	
QA (OTHER) if required:		N/A	

SECTION 5 PREVENTATIVE ACTION COMPLETION

THE PREVENTATIVE ACTIONS SPECIFIED IN SECTION 2 HAVE BEEN COMPLETED. THIS CR IS CLOSED.

	(SIGNATURE)	(NAME)	(DATE)
VERIFIED BY:			
QA (OTHER) if required.		N/A	

DISTRIBUTION:

Project Engineer
Robert E. Williams
Unit Technical Manager
Robert F. Cole

Records Management - - T5 18

QA Manager Performance & Analysis

Other
Specify

Note: CR's are retrievable via eDocs

Attachment 3
CR-02-2517
Page 1 of 1

FRAMATOME ANP

To: Letter to Final Report		20553A-7(01/002)
From: Kent C. Gebetsberger – Framatome ANP UT Level III	Customer or File	FPL / St. Lucie 1 SL1-18
Subj SL1-18 / Vent Line UT Data Deletion	Date	10/17/02

As requested by FPL, Framatome ANP assembled a spreadsheet to indicate the extent of UT coverage in the Reactor Vessel Head Penetration Nozzle Material. The St. Lucie vent line nozzle data was to be included on this report.

To input the requested dimensions into the report, the electronic UT data files had to be accessed and measurements taken from the data file. The data for the St. Lucie vent line was inadvertently removed from both the UT data acquisition and UT data analysis computer systems. It is necessary to remove data files from the UT data acquisition system periodically to make disk storage space available for continued use of the data acquisition computer system.

Prior to the removal of the UT data files, the St. Lucie vent line nozzle was inspected twice by the rotating UT probe S/N 9266-02003 (DB# 35222). Printouts of only one of those two scans have been retrieved. These prints are of the Accusonex data windows to demonstrate procedure compliance with proper essential variable UT settings and to demonstrate that the actual scan was collected at the proper data acquire settings as set by UT procedure 54-ISI-100-09. The printouts are of UT data file number, A2279_14.43.26 which can be correlated to the vent line calibration file number A2278_13.18.36. The calibration file prints are of all five channels showing calibration notch reflector location and depths as recorded by each transducer/channel. The printouts of the vent line nozzle scan are of channel four which is a 45-degree shear wave transducer looking in the circumferential direction. The printout indicates that this transducer had a maximum axial scan distance of 4.95 inches. With this amount of axial travel with this transducer, the farthest transducer from the 45-degree, which is the 70-degree shear looking up had a minimum distance above the top of the weld of 1.9 inches.

Upon completion of the data acquisition of the vent line nozzle, the UT data was analyzed initially by Jean Yves Gourdin, which resulted in no reportable indications. Final data analysis was performed by Kent C. Gebetsberger in the presence of FP&L Principle UT Level III Daniel Nowakowski. Both the initial and final data analysis of the vent line UT data were performed on October 6, 2002.

Date: 10/17/02

Kent C. Gebetsberger – Framatome ANP, UT Level III

Attachment 3

Westinghouse Letter CAW-02-1571 dated November 8, 2002, Application for Withholding Proprietary Information from Public Disclosure

WCAP-15945-NP, Revision 1, *Structural Integrity Evaluation of Reactor Vessel Upper Head Penetrations to Support Continued Operation: St. Lucie Unit 1*

WCAP-15945-P, Revision 1, *Structural Integrity Evaluation of Reactor Vessel Upper Head Penetrations to Support Continued Operation: St. Lucie Unit 1*

Westinghouse

Westinghouse Electric Company
Nuclear Services
P.O. Box 355
Pittsburgh, Pennsylvania 15230-0355
USA

Document Control Desk
U.S. Nuclear Regulatory Commission
Washington, DC 20555-0001

Attention: Mr. Samuel J. Collins

Direct tel (412) 374-5036
Direct fax. (412) 374-4011
e-mail. Galem1js@westinghouse.com

Our ref CAW-02-1571

November 8, 2002

APPLICATION FOR WITHHOLDING PROPRIETARY INFORMATION FROM PUBLIC DISCLOSURE

Subject: WCAP-15945-P, Structural Integrity Evaluation of Reactor Vessel Upper Head Penetrations to Support Continued Operation (Proprietary), dated October 2002 for St. Lucie Unit 1, and WCAP-15946-P, Technical Basis for Repair Options for Reactor Vessel Head Penetration Nozzles and Attachments Welds (Proprietary), dated October 2002 for St. Lucie Unit 1

Dear Mr. Collins:

The proprietary information for which withholding is being requested in the above-referenced report is further identified in Affidavit CAW-02-1571 signed by the owner of the proprietary information, Westinghouse Electric Company LLC. The affidavit, which accompanies this letter, sets forth the basis on which the information may be withheld from public disclosure by the Commission and addresses with specificity the considerations listed in paragraph (b)(4) of 10 CFR Section 2.790 of the Commission's regulations.

Accordingly, this letter authorizes the utilization of the accompanying affidavit by Florida Power and Light Company.

Correspondence with respect to the proprietary aspects of the application for withholding or the Westinghouse affidavit should reference this letter, CAW-02-1571 and should be addressed to the undersigned.

Very truly yours,

J. S. Galembush, Acting Manager
Regulatory and Licensing Engineering

Enclosures

Cc: G. Shukla/NRR

CAW-02-1571

bcc: H. A. Sepp (ECE 4-7A) 1L, 1A
R. Bastien, (Brussels, Belgium) 1L, 1A
L. Ulloa (Madrid, Spain) 1L, 1A
C. Brinkman, 1L, 1A (Westinghouse Electric Co , 12300 Twinbrook Parkway, Suite 330, Rockville, MD 20852)
RLE Administrative Aide (ECE 4-7A) 1L, 1A (letters w/affidavits only)

CAW-02-1571

AFFIDAVIT

COMMONWEALTH OF PENNSYLVANIA:

ss

COUNTY OF ALLEGHENY:

Before me, the undersigned authority, personally appeared J. S. Galembush, who, being by me duly sworn according to law, deposes and says that he is authorized to execute this Affidavit on behalf of Westinghouse Electric Company LLC ("Westinghouse"), and that the averments of fact set forth in this Affidavit are true and correct to the best of his knowledge, information, and belief:

J. S. Galembush, Acting Manager
Regulatory and Licensing Engineering

Sworn to and subscribed
before me this 8th day
of November, 2002

Notary Public

Notarial Seal
Margaret L. Gonano, Notary Public
Monroeville Boro, Allegheny County
My Commission Expires Jan. 3, 2006
Member, Pennsylvania Association Of Notaries

(1) I am Manager, Regulatory and Licensing Engineering, in Nuclear Services, Westinghouse Electric Company LLC ("Westinghouse"), and as such, I have been specifically delegated the function of reviewing the proprietary information sought to be withheld from public disclosure in connection with nuclear power plant licensing and rule making proceedings, and am authorized to apply for its withholding on behalf of the Westinghouse Electric Company LLC.

(2) I am making this Affidavit in conformance with the provisions of 10CFR Section 2.790 of the Commission's regulations and in conjunction with the Westinghouse application for withholding accompanying this Affidavit.

(3) I have personal knowledge of the criteria and procedures utilized by the Westinghouse Electric Company LLC in designating information as a trade secret, privileged or as confidential commercial or financial information.

(4) Pursuant to the provisions of paragraph (b)(4) of Section 2.790 of the Commission's regulations, the following is furnished for consideration by the Commission in determining whether the information sought to be withheld from public disclosure should be withheld.

(i) The information sought to be withheld from public disclosure is owned and has been held in confidence by Westinghouse.

(ii) The information is of a type customarily held in confidence by Westinghouse and not customarily disclosed to the public. Westinghouse has a rational basis for determining the types of information customarily held in confidence by it and, in that connection, utilizes a system to determine when and whether to hold certain types of information in confidence. The application of that system and the substance of that system constitutes Westinghouse policy and provides the rational basis required.

Under that system, information is held in confidence if it falls in one or more of several types, the release of which might result in the loss of an existing or potential competitive advantage, as follows:

(a) The information reveals the distinguishing aspects of a process (or component, structure, tool, method, etc.) where prevention of its use by any of

Westinghouse's competitors without license from Westinghouse constitutes a competitive economic advantage over other companies.

(b) It consists of supporting data, including test data, relative to a process (or component, structure, tool, method, etc.), the application of which data secures a competitive economic advantage, e.g , by optimization or improved marketability.

(c) Its use by a competitor would reduce his expenditure of resources or improve his competitive position in the design, manufacture, shipment, installation, assurance of quality, or licensing a similar product.

(d) It reveals cost or price information, production capacities, budget levels, or commercial strategies of Westinghouse, its customers or suppliers.

(e) It reveals aspects of past, present, or future Westinghouse or customer funded development plans and programs of potential commercial value to Westinghouse.

(f) It contains patentable ideas, for which patent protection may be desirable.

There are sound policy reasons behind the Westinghouse system which include the following:

(a) The use of such information by Westinghouse gives Westinghouse a competitive advantage over its competitors. It is, therefore, withheld from disclosure to protect the Westinghouse competitive position.

(b) It is information that is marketable in many ways. The extent to which such information is available to competitors diminishes the Westinghouse ability to sell products and services involving the use of the information.

(c) Use by our competitor would put Westinghouse at a competitive disadvantage by reducing his expenditure of resources at our expense.

(d) Each component of proprietary information pertinent to a particular competitive advantage is potentially as valuable as the total competitive advantage. If competitors acquire components of proprietary information, any one component may be the key to the entire puzzle, thereby depriving Westinghouse of a competitive advantage.

(e) Unrestricted disclosure would jeopardize the position of prominence of Westinghouse in the world market, and thereby give a market advantage to the competition of those countries.

(f) The Westinghouse capacity to invest corporate assets in research and development depends upon the success in obtaining and maintaining a competitive advantage.

(iii) The information is being transmitted to the Commission in confidence and, under the provisions of 10CFR Section 2.790, it is to be received in confidence by the Commission.

(iv) The information sought to be protected is not available in public sources or available information has not been previously employed in the same original manner or method to the best of our knowledge and belief.

(v) The proprietary information sought to be withheld in this submittal is that which is appropriately marked in brackets, WCAP-15945-P, Structural Integrity Evaluation of Reactor Vessel Upper Head Penetrations to Support Continued Operation (Proprietary), dated October 2002 for St. Lucie Unit 1, and WCAP-15946-P, Technical Basis for Repair Options for Reactor Vessel Head Penetration Nozzles and Attachments Welds (Proprietary), dated October 2002 for St. Lucie Unit 1 is being transmitted by the Florida Power and Light Company letter and Application for Withholding Proprietary Information from Public Disclosure, to the Document Control Desk, Attention Mr.G. Shukla. The proprietary information as submitted for use by Westinghouse Electric Company LLC for St. Lucie Unit 1 is expected to be applicable for other licensee submittals in response to certain NRC requirements for justification of continued safe operation of St. Lucie Unit 1.

This information is part of that which will enable Westinghouse to:

(a) Assess the risk with unexamined Reactor Vessel Upper Head Penetrations.

(b) Assist the customer in obtaining NRC approval.

Further this information has substantial commercial value as follows:

(a) Westinghouse plans to sell the use of similar information to its customers for purposes of meeting NRC requirements for licensing documentation.

(b) Westinghouse can sell support and defense of continued safe operation with the presence of cracks in the Reactor Vessel Upper Head Penetrations.

(c) The information requested to be withheld reveals the distinguishing aspects of a methodology which was developed by Westinghouse.

Public disclosure of this proprietary information is likely to cause substantial harm to the competitive position of Westinghouse because it would enhance the ability of competitors to provide similar support documentation and licensing defense services for commercial power reactors without commensurate expenses. Also, public disclosure of the information would enable others to use the information to meet NRC requirements for licensing documentation without purchasing the right to use the information.

The development of the technology described in part by the information is the result of applying the results of many years of experience in an intensive Westinghouse effort and the expenditure of a considerable sum of money.

In order for competitors of Westinghouse to duplicate this information, similar technical programs would have to be performed and a significant manpower effort, having the requisite talent and experience, would have to be expended.

Further the deponent sayeth not.

CAW-02-1571

PROPRIETARY INFORMATION NOTICE

Transmitted herewith are proprietary and/or non-proprietary versions of documents furnished to the NRC in connection with requests for generic and/or plant-specific review and approval.

In order to conform to the requirements of 10 CFR 2.790 of the Commission's regulations concerning the protection of proprietary information so submitted to the NRC, the information which is proprietary in the proprietary versions is contained within brackets, and where the proprietary information has been deleted in the non-proprietary versions, only the brackets remain (the information that was contained within the brackets in the proprietary versions having been deleted). The justification for claiming the information so designated as proprietary is indicated in both versions by means of lower case letters (a) through (f) contained within parentheses located as a superscript immediately following the brackets enclosing each item of information being identified as proprietary or in the margin opposite such information. These lower case letters refer to the types of information Westinghouse customarily holds in confidence identified in Sections (4)(ii)(a) through (4)(ii)(f) of the affidavit accompanying this transmittal pursuant to 10 CFR 2.790(b)(1).

CAW-02-1571

COPYRIGHT NOTICE

The reports transmitted herewith each bear a Westinghouse copyright notice. The NRC is permitted to make the number of copies of the information contained in these reports which are necessary for its internal use in connection with generic and plant-specific reviews and approvals as well as the issuance, denial, amendment, transfer, renewal, modification, suspension, revocation, or violation of a license, permit, order, or regulation subject to the requirements of 10 CFR 2.790 regarding restrictions on public disclosure to the extent such information has been identified as proprietary by Westinghouse, copyright protection notwithstanding. With respect to the non-proprietary versions of these reports, the NRC is permitted to make the number of copies beyond those necessary for its internal use which are necessary in order to have one copy available for public viewing in the appropriate docket files in the public document room in Washington, DC and in local public document rooms as may be required by NRC regulations if the number of copies submitted is insufficient for this purpose. Copies made by the NRC must include the copyright notice in all instances and the proprietary notice if the original was identified as proprietary.