Review of the Occupational Air Sampling Program at the Cabot Performance Materials Corporation Boyertown, Pennsylvania Plant

Prepared by:

Weston Solutions, Inc.

Approved by:

_____ _____

Robert Schoenfelder
Project Manager

Date

Prepared for:

Cabot Performance Materials, Inc.
County Line Road
Boyertown, PA 19512

August 26, 2002

1. INTRODUCTION

This report provides the details of a review of the occupational air sampling program at the Cabot Performance Materials, Inc. (CPM) Boyertown plant. The Boyertown plant holds license SMB-920, which was issued by the Nuclear Regulatory Commission (NRC).

The present report is an update of a more detailed evaluation of the air sampling program that was performed during 1995 by Applied Radiological Control, Inc. (1995). The present report was prepared in response to item B of a Notice of Violation issued on October 23, 2001 by the NRC (Kinneman 2001).

This report touches on several topics that affect the current sampling program, including derived air concentration (DAC) values for the ores processed at the plant, use of a cyclone on personal sampling equipment, and placement of samplers to obtain more representative dust samples.

In addition, this document provides current area and breathing zone sample data and makes recommendations for calculation of a gross alpha DAC, effective DAC, and continued air sampling.

The CPM plant in Boyertown, Pennsylvania extracts tantalum and niobium from ore materials that contain low concentrations of natural uranium and thorium. Almost all of the ores contain less than 1 percent uranium plus thorium (U + Th) by weight. The radioactive constituents are not extracted or concentrated from ore material during this process. Consequently, workers may be exposed to low concentrations of airborne uranium, thorium, and their radioactive progeny during routine plant operations. Although higher air concentrations that can exceed DAC may be present during non-routine operations, these non-routine operations are performed in respirators. This report focuses on the air sampling program for routine operations.

2. DERIVATION OF A GROSS ALPHA DAC

This section establishes a rationale for a gross alpha DAC that may be used to estimate a committed effective dose equivalent from inhalation at the CPM Boyertown plant. The DAC is believed to be protective of workers and is reflective of the historical variability of the uranium-238 to thorium-232 ratio.

2.1 COMPOSITION OF THE ORE MATERIALS

This evaluation of the uranium and thorium content of ores processed by CPM is based on the year 2001. During 2001, CPM received a total of 207 shipments. The uranium and thorium content of all the 2001 tantalum-niobium ore shipments is listed as Appendix A.

The data in Appendix A are sorted by the rank of the activity ratio, that is, by how much of the radioactivity in an ore batch was produced by uranium-238:

U-238 activity / (U-238 activity + Th-232 activity).

Figure 1 is a graph of the activity percent uranium-238 versus the rank of the activity ratio for the ore received in 2001. This is an important factor because the dose per picocuries (pCi) of intake increases as the ratio decreases. Summary statistics for ores received in 2001 are provided in Table 1.

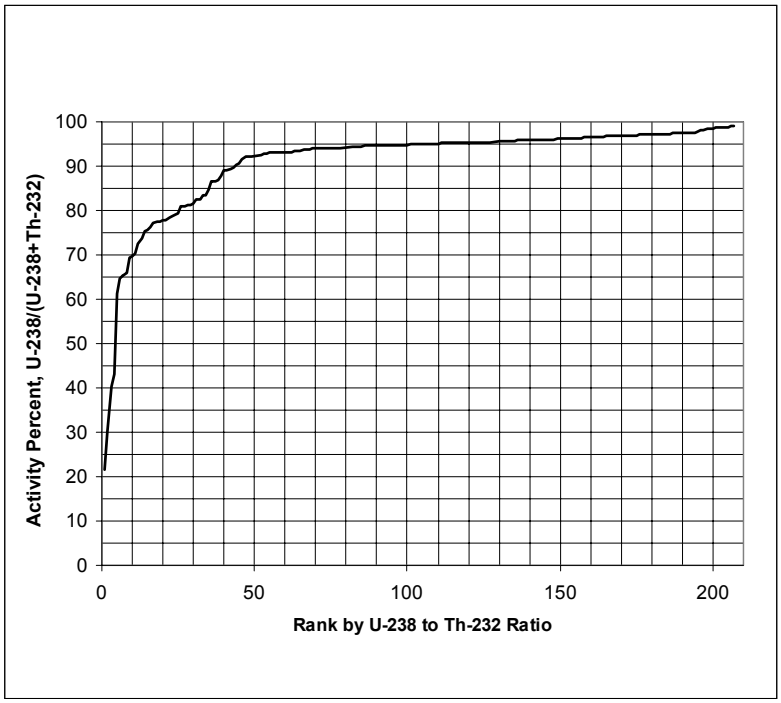

Figure 1. Plot of the Activity Percent Uranium Versus the Rank by U-238 to Th-232 ratio

Figure 1 illustrates that most of the ore materials processed by CPM during 2001 had high activity ratios of uranium-238 to thorium-232. To be conservative, the 95% lower confidence

limit on the 0.1 quantile uranium-238 activity ratio for 2001 data is recommended for derivation of the gross alpha DAC.[1] This corresponds to 75% uranium-238 activity and 25% thorium-232 activity (or a ratio of 3:1). Ninety percent of the ore mixtures processed at the Boyertown site will have an activity ratio of uranium-238 to thorium-232 of 75% to 25% or greater.

Table 1. Summary Statistics for the 207 Ta-Nb Ore Shipments Received by CPM During 2001

Average activity ratio: U-238 / U-238 + Th-232	0.91
Median activity ratio: U-238 / U-238 + Th-232	0.95
0.1 quantile activity ratio: U-238 / U-238 + Th-232	0.78 (Rank 21 of 207)
95% lower confidence limit on 0.1 quantile activity ratio	0.75 (Rank 14 of 207)

2.2 DEGREE OF EQUILIBRIUM IN THE DECAY CHAINS

The ore material processed by the Boyertown plant is expected to have uranium and thorium more or less uniformly distributed through its volume since the ore is composed of niobium/tantalum minerals in which uranium and thorium are randomly substituted for calcium and rare earth elements (Frondel 1958). Therefore, radon is formed throughout the matrix of these materials. Very little of the radon in the ore materials is produced at the surfaces of mineral grains, and so very little is expected to emanate from mineral grains. Since very little radon is expected to emanate from the ore, a high degree of equilibrium in the uranium-238 and thorium-232 decay chains is also expected.

Like the ore processed at CPM, oil field barite pipe scale contains radioactive materials (radium-226) that are distributed more or less uniformly throughout the matrix of the scale. As with niobium/tantalum minerals, very little of the radon is available for emanation. The EPA assigned pipe scale materials a radon emanation fraction of 5% (EPA 1993).

To assess the equilibrium of the CPM ore materials, gross gamma was counted on a sample of feed material. A sample of ground ore material weighing 800 grams was placed into a 410-ml

[1] This is based on statistics of rank. The 0.1 quantile activity ratio is the activity ratio for the ore lot that has a rank of 21 out of 207. The 95% lower confidence limit on the 0.1 quantile value is the activity ratio that corresponds to the rank of: $21 - (1.645*[207*0.1 * 0.9]^{0.5})$ or rank 14, which is 75% uranium-238: 25% thorium-232.

low-form polyethylene container that was allowed to sit open for 12 hours. The container was then sealed shut using black electrical tape. The sample was counted for a series of 10-minute counts in the configuration shown in Figure 2. The net count rate in counts per minute (cpm) was plotted versus time, as shown in Figure 3. The time scale on the graph represents the elapsed time in days since the sample was sealed.

Figure 2. Counting Container for Configuration

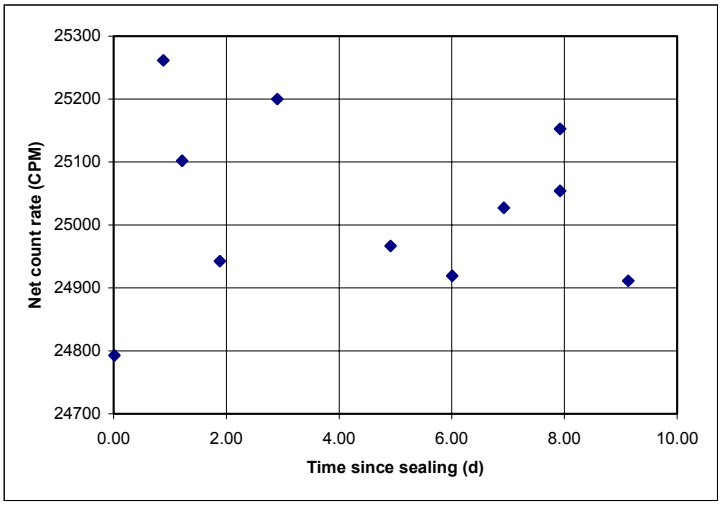

Figure 3. Net Count Rate Versus Time Since Sealing

The gamma emitters in the uranium-238 and thorium-232 chains are largely progeny from radon-222 and radon-220. Therefore, a significant increase in the count rate with time since sealing would indicate that a significant amount of radon was lost when the container was open for the 12-hour period. Since Figure 3 indicates that the count rate remained essentially constant since sealing, the material is expected to maintain a high degree of equilibrium between radium and radon progeny during handling. Thus it is concluded that the material would retain nearly all of its radon during handling and grinding. Therefore, the elements below radium-226 and radium-224 are assumed to be at 90% of their equilibrium activity.

2.3 DAC VALUES FOR THE URANIUM-238 DECAY CHAIN

The uranium-238 decay chain is depicted in Figure 4. The degree of equilibrium and number of alpha emissions per uranium-238 decay are given in Table 2.

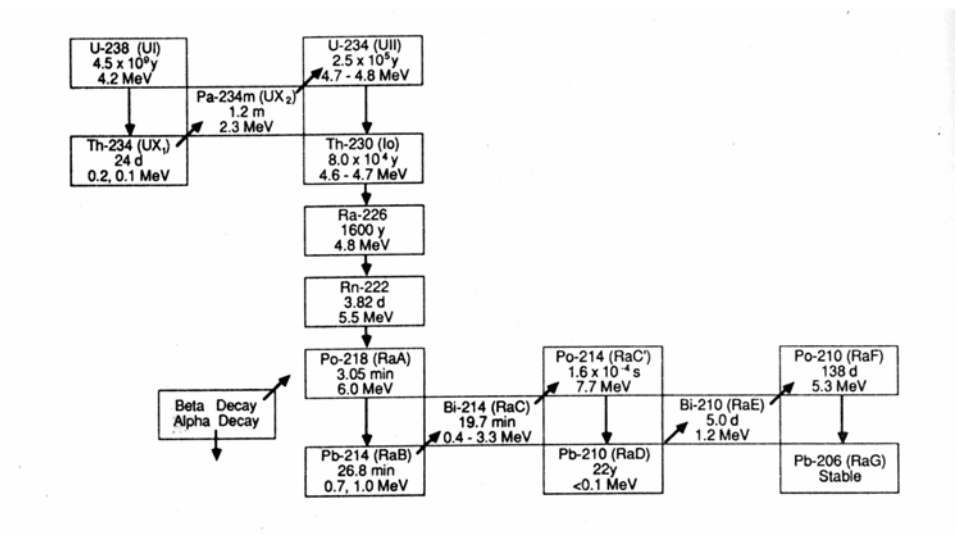

Figure 4. Uranium-238 Decay Chain (after NCRP 1988)

Table 2. Uranium-238 Decay Chain and Equilibrium Assumptions

Isotope	Equilibrium pCi per pCi U-238	Number of Alphas per Decay	Minimum Fraction of Equilibrium expected	pCi Alpha Activity per pCi U-238	pCi activity per pCi of U-238
U-238	1.00E+00	1	1	1	1.00E+00
U-234	1.00E+00	1	1	1	1.00E+00
Th-234	1.00E+00	0	1	0	1.00E+00
Th-230	1.00E+00	1	1	1	1.00E+00
Rn-222	1.00E+00	1	0.9	0.9	9.00E-01
Ra-226	1.00E+00	1	1	1	1.00E+00
Po-218	1.00E+00	1	0.9	0.9	9.00E-01
Po-214	1.00E+00	1	0.9	0.9	9.00E-01
Po-210	1.00E+00	1	0.9	0.9	9.00E-01
Pb-214	1.00E+00	0	0.9	0	9.00E-01
Pb-210	1.00E+00	0	0.9	0	9.00E-01
Pa-234m	1.00E+00	0	1	0	1.00E+00
Pa-234	1.30E-03	0	1	0	1.30E-03
Bi-214	1.00E+00	0	0.9	0	9.00E-01
Bi-210	1.00E+00	0	0.9	0	9.00E-01
Total	1.45E+01			7.6	13.2013

Table 3. U-238 Decay Chain Derived Air Concentration Values

Isotope	DAC (µCi/ml)
U-238	2.00E-11
U-234	2.00E-11
Th-230	6.00E-12
Rn-222	---
Ra-226	3.00E-10
Po-218	---
Po-214	---
Po-210	3E-10
Pb-214	---
Pb-210	1.00E-10
Pa-234m	3.00E-06
Pa-234	---
Bi-214	---
Bi-210	---

The mixture DAC for the uranium-238 decay chain is calculated from the data in Tables 2 and 3 as follows:

(Equation 1)

$$UDAC = 1/(fU238(\tfrac{1}{U238} + \tfrac{1}{U234} + \tfrac{1}{Th230} + \tfrac{1}{Ra226} + \tfrac{1}{Pa234m}) + fPo210(\tfrac{1}{Po210} + \tfrac{1}{Pb210}))$$

In this equation, the fU238 is equal to 1 since the concentrations of uranium-238, uranium-234, thorium-230, radium-226 and palladium-234m are equal. The concentrations of polonium-210 and lead-210 are equal to 0.9 times the concentration of uranium-238, so fPo210 is equal to 0.9. The isotope values in the denominator are the DAC values for the respective isotopes given in Table 3. When these values are substituted into Equation 1, a mixture DAC of 3.546E-12 µCi/ml uranium-238 is obtained. From Table 2 the number of alpha decays per decay of uranium-238 is 7.6. The corresponding gross alpha DAC for the uranium-238 decay chain (*GA DAC*) is 2.695E-11 µCi/ml.

2.4 DAC VALUES FOR THE THORIUM-232 DECAY CHAIN

The thorium-232 decay chain is shown in Figure 5. The mixture DAC for the thorium-232 decay chain is calculated from the data in Tables 4 and 5 as shown in Equation 2.

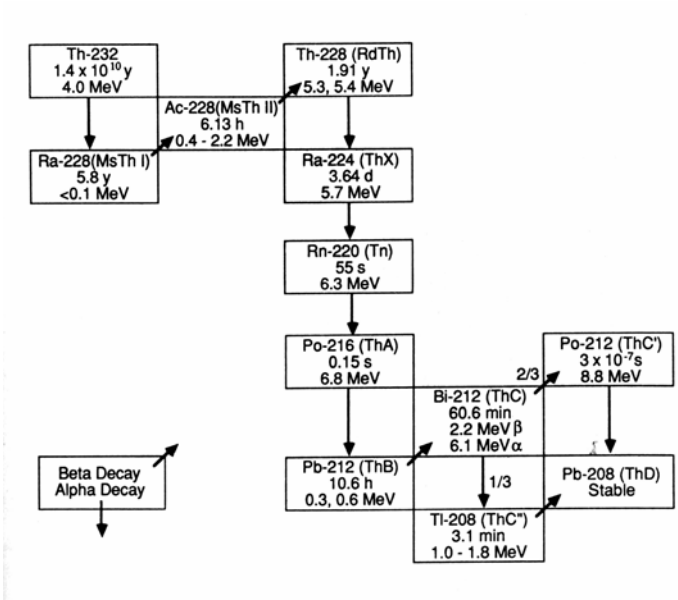

Figure 5. Thorium-232 Decay Chain (after NCRP 1988)

Table 4. Thorium-232 Decay Chain and Equilibrium Assumptions

Isotope	Equilibrium pCi per pCi Th-232	Number of Alphas per Decay	Fraction of Equilibrium Expected	pCi Alpha Activity per pCi Th-232	pCi Activity per pCi of Th-232
Tl-208	3.61E-01	0	0.9	0.00E+00	3.25E-01
Pb-212	1.00E+00	0	0.9	0.00E+00	9.00E-01
Bi-212	1.00E+00	0.36	0.9	3.24E-01	9.00E-01
Po-212	6.43E-01	1	0.9	5.79E-01	5.79E-01
Po-216	1.00E+00	1	0.9	9.00E-01	9.00E-01
Rn-220	1.00E+00	1	0.9	9.00E-01	9.00E-01
Ra-224	1.00E+00	1	1	1.00E+00	1.00E+00
Ra-228	1.00E+00	0	1	0.00E+00	1.00E+00
Ac-228	1.00E+00	0	1	0.00E+00	1.00E+00
Th-228	1.00E+00	1	1	1.00E+00	1.00E+00
Th-232	1.00E+00	1	1	1.00E+00	1.00E+00
Total	1.00E+01	---	---	5.70E+00	9.50E+00

Table 5. Thorium-232 Decay Chain Derived Air Concentration Values

Isotope	DAC (µCi/ml)
Tl-208	---
Pb-212	---
Bi-212	---
Po-212	---
Po-216	---
Rn-220	---
Ra-224	7.00E-10
Ra-228	5.00E-10
Ac-228	2.00E-08
Th-228	7.00E-12
Th-232	1.00E-12

(Equation 2)

$$ThDAC = \frac{1}{fTh\left(\frac{1}{Th232} + \frac{1}{Th228} + \frac{1}{Ra228} + \frac{1}{Ra224} + \frac{1}{Ac228}\right)}$$

All isotopes above radon-220 in the decay chain are assumed to be in equilibrium in the thorium-232 chain. Radon-220 and progeny below it in the decay chain are assumed to be present at 90% of the equilibrium values. This leads to the assumption of 5.7 alpha decays per thorium-232 decay given in Table 4. The isotope values in the denominator are the DAC values for the respective isotopes given in Table 5. When these values are substituted into Equation 2, a mixture DAC of 8.723E-13 μCi/ml thorium-232 is obtained. The corresponding gross alpha DAC for the thorium-232 decay chain (*GA DAC*) is 4.972E-12 μCi/ml.

2.5 DAC VALUES FOR THE MIXTURES OF URANIUM-238 AND THORIUM-232 DECAY CHAIN ISOTOPES

The DAC for mixtures of the two decays is given by Equation 3. The factor ThtoU is one-third for a mixture that has the activity ratio 1 thorium : 3 uranium. The parameters fU238 and fPo210 have the same meanings and values as in Equation 1.

(Equation 3)

$$\begin{aligned} MixDAC = 1/\{ & ThtoU\{\tfrac{1}{Th232} + \tfrac{1}{Th228} + \tfrac{1}{Ra228} + \tfrac{1}{Ra224} + \tfrac{1}{Ac228}\} + \\ & fU238\{\tfrac{1}{U238} + \tfrac{1}{U234} + \tfrac{1}{Th230} + \tfrac{1}{Ra226} + \tfrac{1}{Pa234m}\} + \\ & fPo210\{\tfrac{1}{Po210} + \tfrac{1}{Pb210}\}\} \end{aligned}$$

The same assumptions about degree of equilibrium from Tables 2 and 4 are made. This leads to the assumption of 9.5 alpha decays per uranium-238 decay for this mixture. When the DAC values from Tables 3 and 5 are substituted into Equation 3, a mixture DAC of 1.506E-12 μCi/ml as uranium-238 is obtained. The corresponding gross alpha DAC for the thorium-232 decay chain (*GA DAC*) is 1.4305E-11 μCi/ml.

2.6 COMPARISON WITH PREVIOUS DAC

A comparison of the proposed DAC and the DAC derived in 1995 is provided in Table 6. The previous DAC was based on the assumption that only U-nat (uranium-238, thorium-234, palladium-234m, uranium-234, thorium-234, and radium-226) and thorium-232 were present in the ore.

The DAC for U-nat, which was used to derive the 1995 DAC, is given in Appendix B Title 10 Code of Federal Regulations, Chapter 20 (10 CFR 20). It is based on the assumption that the activity median aerodynamic diameter (AMAD) of the material is 10 μm and that uranium-238 is in equilibrium with thorium-234, palladium-234m, uranium-234, thorium-230, and radium-226. This particle size assumption makes the DAC derived in 1995 unsuitable for use with a dust cyclone. The proposed DAC, which was developed in this report, could be used in conjunction with a dust cyclone. An empirically determined higher degree of equilibrium is also used in the proposed DAC.

Table 6. Comparison of the Proposed and Previous DAC Values

Factor	Proposed DAC	DAC Derived in in 1995
Isotopes considered	All isotopes in U-238 and Th-232 decay chains.	Unat (U-238, Th-234, Pa-234m, U-234, Th-230 and Ra-226) and Th-232.
Assumed Particle size	1 μm AMAD	Mixed: 1 μm AMAD Th-232 + 10 μm Unat
Number of Alphas in U-238 decay chain	7.6	4
Number of Alphas in Th-232 decay chain	5.7	3
Activity ratio	25 % Th-232: 75% U-238	60% Th-232: 40% U-238
Gross Alpha DAC	1.4305E-11 μCi/ml	5.4E-12 μCi/ml

2.7 USE OF A DUST CYCLONE

Prior approval from NRC is needed to use dust cyclones on personal air sampling devices. The radioactive feed materials at the CPM plant appear to meet the NRC's criteria for using dust cyclones to compensate for particle size. The criteria for using dust cyclones are stated in Regulatory Guide 8.25 (NRC 1992). In particular the following five items must be addressed:

- **The need for adjustment.** The feed material used by CPM may be described as insoluble oxide minerals and slag materials that contain uranium and thorium. The airborne dusts of concern are generated during a mechanical grinding process and are expected to have a large particle size. A large particle size means that most of the airborne particulate is not readily deposited in the pulmonary region of the lung where it can lead to significant internal radiation dose. Use of dust cyclones should allow CPM to demonstrate that airborne concentrations in the workplace during routine activities are below 10% of the DAC.

- **The radioactive materials involved, their chemical form and lung clearance class.** The feed materials for CPM's tantalum extraction process are various insoluble niobium oxide/tantalum oxide minerals and occasional batches of tin slag (another insoluble oxide material). The thorium and, to a lesser degree, uranium in these materials are the principal sources of internal radiation dose. The oxides of uranium and thorium isotopes are listed as lung clearance class Y materials according Appendix B of 10 CFR 20, *Annual Limits on Intake (ALIs) and Derived Air Concentrations (DACs) for Occupational Exposure.*

- **How the chemical form or solubility class was determined**. The chemical form of the uranium and thorium as complex oxides is based on the descriptions of the feed materials and Frondel (1958). The classification of the oxides of uranium and thorium as lung clearance class Y is based on Appendix B to 10 CFR 20.

- **Specific cyclone types, performance specifications and operating procedures**. As appropriate to CPM concentrations, air samples would be collected with a SKC, Inc. GS-3 dust cyclone following the manufacturer's respirable dust sampling procedure, (Appendix B of this report). The sampler would be operated at the recommended flow rate of 2.75 liters per minute, which results in a collection efficiency of 50% for 4-µm particles.

2.8 COMPARISON OF PERSONAL AND AREA AIR SAMPLE DATA IN BUILDING 73

Personal breathing zone and area air samples are collected simultaneously in Building 73 work areas at CPM. In general, the breathing zone samples are collected over a work shift. Area air samplers are usually allowed to operate continuously, and the air filter media are replaced once a week. All area air and breathing zone sample results to date have been collected as total dust samples.

Most breathing zone air samples were collected during ore dumping operations. These area and breathing zone sample results are provided in Table 7 for the time period of April 22, 2002 to June 10, 2002. The breathing zone and area air samples were collected as total dust samples. Based on Table 7, the breathing zone concentrations during ore dumping averaged 23% of the DAC.

Table 7. Comparison of Breathing Zone and Area Air samples for Ore Dumping Activities

Sample End Date	Area Sample (µCi/ml)	Date of Breathing Zone Sample	Breathing Zone Sample (µCi/ml)	Remarks
22-Apr-02	3.6E-13	18-Apr-02	0.0E+00	
13-May-02	2.0E-13	10-May-02	0.0E+00	
20-May-02	1.1E-12	14-May-02	0.0E+00	
20-May-02	1.1E-12	20-May-02	0.0E+00	
10-Jun-02	1.1E-12	06-Jun-02	0.0E+00	filling ore bin
10-Jun-02	1.1E-12	07-Jun-02	0.0E+00	cleaning and dumping ore
29-Apr-02	4.1E-13	24-Apr-02	6.8E-13	
22-Apr-02	3.6E-13	22-Apr-02	7.0E-13	
28-May-02	5.8E-13	22-May-02	7.5E-13	
06-May-02	4.1E-13	30-Apr-02	8.2E-13	
17-Jun-02	1.8E-13	17-Jun-02	1.0E-12	
13-May-02	2.0E-13	09-May-02	1.1E-12	
22-Jul-02	4.7E-13	17-Jul-02	1.1E-12	
17-Jun-02	1.8E-13	11-Jun-02	1.3E-12	73 ore grind
06-May-02	4.1E-13	04-May-02	1.4E-12	
28-May-02	5.8E-13	22-May-02	1.4E-12	
13-May-02	2.0E-13	10-May-02	1.8E-12	
06-May-02	4.1E-13	06-May-02	1.9E-12	
13-May-02	2.0E-13	08-May-02	2.1E-12	
28-May-02	5.8E-13	21-May-02	2.1E-12	
03-Jun-02	3.8E-13	31-May-02	2.2E-12	73 ore grind
06-May-02	4.1E-13	01-May-02	2.9E-12	
03-Jun-02	3.8E-13	30-May-02	3.0E-12	73 ore grind
13-May-02	2.0E-13	09-May-02	3.2E-12	
10-Jun-02	1.1E-12	10-Jun-02	3.2E-12	ore grind
10-Jun-02	1.1E-12	06-Jun-02	3.3E-12	
12-Apr-02	5.2E-13	12-Apr-02	3.8E-12	
17-Jun-02	1.8E-13	12-Jun-02	4.0E-12	ore grinding
06-May-02	4.1E-13	30-Apr-02	4.2E-12	
20-May-02	1.1E-12	16-May-02	4.2E-12	
20-May-02	1.1E-12	17-May-02	4.4E-12	
28-May-02	5.8E-13	23-May-02	4.9E-12	
05-Aug-02	1.2E-12	30-Jul-02	5.2E-12	
22-Apr-02	3.6E-13	19-Apr-02	6.4E-12	
13-May-02	2.0E-13	13-May-02	8.0E-12	
22-Apr-02	3.6E-13	16-Apr-02	8.3E-12	

Sample End Date	Area Sample (µCi/ml)	Date of Breathing Zone Sample	Breathing Zone Sample (µCi/ml)	Remarks
12-Apr-02	5.2E-13	11-Apr-02	1.0E-11	
28-May-02	5.8E-13	21-May-02	1.2E-11	
03-Jun-02	3.8E-13	31-May-02	1.9E-11	ore grind
Average	5.4E-13		3.3E-12	
Ratio: Area to BZ	0.16			

Only two breathing sample results were obtained for ore screening activities, as summarized in Table 8. The average breathing zone concentration for this activity is 43% of the gross alpha DAC.

Table 8. Area and Breathing Zone Sample Results for Sampling the Ore Screening Activities.

Sample End Date	Area Sample (µCi/ml)	Date	Breathing Zone (µCi/ml)
13-May-02	2.0E-13	10-May-02	2.4E-12
20-May-02	1.1E-12	16-May-02	1.0E-11
Average	6.5E-13		6.2E-12
Ratio: BZ to Area	0.10		

Regulatory Guide 8.25 (NRC 1992) states that area air samples need to be representative of breathing zone air concentrations. In particular, the average ratio of area air sample to breathing zone concentration should exceed 0.7 for all workers. This ratio should also exceed 0.5 for any person. The area air sample data do not meet these criteria for representativeness.

It is anticipated that once the dustiest activities are excluded, breathing zone concentrations from ore dumping and ore screening will be less than 10% of the gross alpha DAC if the NRC authorizes the use of dust cyclones on breathing zone samples.

2.9 BREATHING ZONE AND AREA AIR SAMPLE DATA DURING THORIUM DOPING ACTIVITIES

Table 9 provides the results for breathing zone gross alpha during thorium doping operations. The average concentration for this activity is 28% of the gross alpha DAC. Breathing zone concentrations during thorium doping operations should be less than 10% of the gross alpha DAC if the NRC authorizes the use of dust cyclones on breathing zone samples.

Table 9. Breathing Zone Sample Results for Thorium Doping Operations

Date	Breathing Zone Gross Alpha (µCi/ml)
12-Apr-02	2.00E-11
16-Apr-02	1.10E-12
03-May-02	5.40E-13
22-May-02	7.30E-13
24-May-02	6.80E-13
29-May-02	5.90E-13
Average	3.94E-12

3. RECOMMENDATIONS AND CONCLUSIONS CONCERNING THE AIR SAMPLING PROGRAM

The following recommendations are based on observations from the air sampling program review:

1. Assume an activity ratio of 3 uranium-238 : 1 thorium-232. The 3:1 activity is expected to overestimate inhalation doses from airborne material 90% of the time.

2. Use the gross alpha DAC of 1.4305E-11 µCi/ml to obtain an initial estimate of the inhalation exposures from airborne feed material at CPM. Once gross counting of air filters has occurred, all area sample filters should be saved and submitted as 3-month composite samples for isotopic uranium and isotopic thorium. DAC hours that are recorded on a person's official exposure record should be based on the gross alpha DAC that is calculated from the actual thorium to uranium isotopic ratio for the quarter. On average, it is expected that the quarterly gross alpha isotopic data will reduce the initial DAC-hour estimate by 30%.

3. Archive breathing zone filters and maintain the chain of custody once gross counting has occurred. The radiation safety officer should decide when the filters are no longer useful and can be discarded.

4. Pursue approval from NRC to use dust cyclones on personal air sampling pumps in order to exclude non-respirable particulate from air samples.

5. Continue breathing zone air sampling. Once approval to use dust cyclones on breathing zone air samples is obtained, perform another evaluation after at least 3 months of respirable dust gross alpha data are available.

In addition, the following items should be considered:

1. The area air sample results do not appear to be representative of breathing zone concentrations. Area air sample stations need to be relocated to areas of higher concentrations that are more representative of breathing zone concentrations. A real time aerosol monitor could be used to identify areas in Building 73 where total airborne dust concentrations are several times higher than the current locations. Another area air sampler should be located where concentrations are higher.

2. Non-routine operations that create dusty conditions can produce elevated airborne radionuclide concentrations. Fixed location area air samplers probably cannot give results that are representative of these activities. Workers should wear breathing zone air samplers whenever these non-routine activities occur. Non-routine activities include breaking open contaminated systems, using compressed air for cleanout, non-routine activities, dry sweeping, and other dusty activities identified by the radiation safety officer.

3. As discussed in the Review of the Bioassay Program (Weston Solutions, Inc. 2002), use of continuous air monitors (CAM) during dusty operations that require respirator use should be considered. This would allow special bioassay sample collection to be linked to a CAM alarm rather than respirator usage. Implementation of feasible engineering controls would minimize the frequency of CAM alarms and bioassay sample collection.

4. REFERENCES

Applied Radiological Control, Inc. (ARC), 1995. *Report on Actions Relating to Occupational Air Sampling, Effluent Sampling and ALARA*.

Frondel, Clifford, 1958. *Systematic Mineralogy of Uranium and Thorium*, Geological Survey Bulletin 1064, U.S. Geological Survey, Washington, DC.

Kinneman, 2001. Letter from John D. Kinneman (U.S. Nuclear Regulatory Commission) from Martin O'Neill (Cabot Corporation). Inspection 04006940/2001001, Cabot Corporation, Boyerstown site and Notice of Violation, Docket 04006940, October 23, 2001.

U.S. Environmental Protection Agency (EPA), 1993. *Diffuse NORM Wastes – Waste Characterization and Preliminary Risk Assessment*. Prepared by S. Cohen and Associates, Inc., and Rogers & Associates Engineering Corporation for the U.S. Environmental Protection Agency Office of Radiation and Indoor Air.

U.S. Nuclear Regulatory Commission (NRC), 1992. *Air Sampling in the Workplace*, Regulatory Guide 8.25, Washington, DC. National Council on Radiation Protection and Measurements (NCRP), 1988. *Measurement of Radon and Radon Daughters in Air*, NCRP Report 97, Bethesda, MD.

Weston Solutions, Inc., 2002. *Review of the Bioassay Program: The Cabot Performance Materials Corporation Boyertown, Pennsylvania Plant*, Albuquerque, NM.

APPENDIX A

URANIUM AND THORIUM CONTENT OF FEED MATERIALS PROCESSED BY CPM IN 2002

Cabot Lot No	% Th	% U	Activity % U-238	Rank by %U-238 Activity
4987	0.015	0.522	99	207
4985	0.015	0.446	99	206
4954	0.015	0.420	99	205
228628004	0.015	0.416	99	204
4969	0.015	0.395	99	203
4995	0.015	0.380	99	202
4933	0.015	0.369	99	201
1008	0.015	0.318	98	200
4967	0.015	0.299	98	199
4955	0.015	0.287	98	198
1006	0.015	0.264	98	197
228624003	0.015	0.237	98	196
4986	0.015	0.206	98	195
4921	0.015	0.198	98	194
4932	0.015	0.194	98	193
5027	0.015	0.192	98	192
4945	0.015	0.191	98	191
224035003	0.015	0.191	98	191
4988	0.015	0.189	97	189

Cabot Lot No	% Th	% U	Activity % U-238	Rank by %U-238 Activity
4992	0.015	0.188	97	188
4907	0.015	0.182	97	187
224035005	0.015	0.178	97	186
	0.015	0.177	97	185
5019	0.015	0.175	97	184
4976	0.015	0.172	97	183
5127	0.015	0.172	97	183
5127a	0.015	0.172	97	183
1012	0.015	0.171	97	180
4993	0.015	0.170	97	179
4943	0.015	0.166	97	178
5204	0.015	0.163	97	177
224035006	0.016	0.171	97	176
228623001	0.015	0.159	97	175
228623002	0.015	0.158	97	174
228623004	0.015	0.156	97	173
5129	0.015	0.151	97	172
5154	0.015	0.151	97	172
5154A	0.015	0.151	97	172

Cabot Lot No	% Th	% U	Activity % U-238	Rank by %U-238 Activity
228624002	0.015	0.149	97	169
4904	0.015	0.148	97	168
5063	0.015	0.148	97	167
5074	0.015	0.148	97	167
4946	0.015	0.145	97	165
224035007	0.015	0.144	97	164
5098	0.015	0.143	97	163
1005	0.015	0.140	97	162
5064	0.015	0.138	97	161
5219	0.022	0.200	97	160
4944	0.015	0.134	96	159
4968	0.015	0.131	96	158
228623003	0.015	0.131	96	157
4960	0.015	0.130	96	156
5025	0.015	0.129	96	155
4903	0.015	0.128	96	154
228618001	0.031	0.262	96	153
5048	0.015	0.126	96	152
4949	0.015	0.125	96	151
228623005	0.015	0.123	96	150
228624008	0.018	0.144	96	149
4916	0.015	0.120	96	148
228624007	0.015	0.119	96	147

Cabot Lot No	% Th	% U	Activity % U-238	Rank by %U-238 Activity
228624011	0.015	0.119	96	147
4913	0.015	0.118	96	145
5107	0.017	0.131	96	144
4964	0.015	0.116	96	143
5128	0.015	0.114	96	142
4953	0.015	0.114	96	141
4991	0.015	0.113	96	140
4994	0.015	0.112	96	139
5061	0.015	0.112	96	139
228625004	0.015	0.112	96	139
228623009	0.015	0.111	96	136
4947	0.015	0.109	96	135
5184	0.021	0.153	96	134
5014A	0.015	0.108	96	133
5046	0.015	0.108	96	133
4905	0.015	0.106	96	131
4958	0.015	0.104	96	130
4959	0.015	0.104	96	130
228623008	0.015	0.104	96	130
228623010	0.015	0.103	95	127
228608002	0.026	0.180	95	126
4931	0.015	0.102	95	125
228623015	0.015	0.102	95	125

Cabot Lot No	% Th	% U	Activity % U-238	Rank by %U-238 Activity
228626003	0.062	0.416	95	123
228625007	0.018	0.119	95	122
1009	0.015	0.100	95	121
228623011	0.015	0.100	95	121
228627001	0.097	0.647	95	119
5055	0.021	0.141	95	118
5011	0.015	0.099	95	117
228623006	0.015	0.099	95	117
1007	0.015	0.098	95	115
4984	0.015	0.098	95	115
228620002	0.015	0.098	95	115
5024	0.015	0.097	95	112
228627002	0.088	0.568	95	111
228625002	0.018	0.117	95	110
4971	0.015	0.094	95	109
228623007	0.015	0.094	95	109
4952	0.021	0.132	95	107
228625006	0.015	0.093	95	106
228624006	0.015	0.093	95	106
228628001	0.056	0.349	95	104
4972	0.015	0.092	95	103
228628003	0.088	0.534	95	102
228626002	0.070	0.424	95	101

Cabot Lot No	% Th	% U	Activity % U-238	Rank by %U-238 Activity
4961	0.015	0.090	95	100
4996	0.015	0.090	95	100
4948	0.015	0.089	95	98
5177	0.023	0.135	95	97
4906	0.059	0.346	95	96
228626001	0.068	0.397	95	95
224035004	0.031	0.179	95	94
4983	0.015	0.086	95	93
228625008	0.018	0.102	95	92
4930	0.015	0.086	95	91
5049	0.015	0.086	95	91
228628002	0.084	0.481	95	89
228628002	0.084	0.481	95	89
5108	0.069	0.390	95	87
231006002	0.015	0.085	95	86
228625003	0.015	0.083	94	85
5056	0.020	0.112	94	84
	0.015	0.081	94	83
4918	0.015	0.080	94	82
4920	0.015	0.080	94	82
4970	0.015	0.080	94	82
5051	0.015	0.080	94	82
4915	0.015	0.079	94	78

Cabot Lot No	% Th	% U	Activity % U-238	Rank by %U-238 Activity
5013	0.015	0.079	94	78
5186	0.018	0.092	94	76
5149	0.018	0.092	94	75
228623014	0.015	0.076	94	74
228625001	0.018	0.094	94	73
228618003	0.016	0.081	94	72
228608001	0.035	0.178	94	71
5218	0.018	0.093	94	70
4902	0.015	0.075	94	69
5053	0.112	0.549	94	68
4919	0.015	0.073	94	67
5054	0.035	0.170	94	66
228618002	0.038	0.176	93	65
228619001	0.015	0.070	93	64
228623012	0.015	0.069	93	63
226594001	0.015	0.068	93	62
228623018	0.015	0.068	93	62
226599001	0.015	0.068	93	62
226600001	0.015	0.068	93	62
228625005	0.018	0.083	93	58
	0.015	0.067	93	57
228614004	0.015	0.066	93	56
5007	0.046	0.199	93	55

Cabot Lot No	% Th	% U	Activity % U-238	Rank by %U-238 Activity
5012A	0.015	0.063	93	54
4957	0.015	0.062	93	53
228623013	0.015	0.059	92	52
228623016	0.015	0.059	92	52
228623017	0.015	0.059	92	52
228646001	0.097	0.382	92	49
4914	0.015	0.059	92	48
4917	0.015	0.058	92	47
5073	0.015	0.053	92	46
5050	0.024	0.075	91	45
228615005	0.149	0.458	90	44
5020	0.015	0.042	90	43
228646003	0.016	0.044	89	42
5028	0.062	0.168	89	41
228621001	0.098	0.257	89	40
1011	0.015	0.035	88	39
5176	0.030	0.065	87	38
228614005	0.161	0.338	87	37
5047	0.027	0.057	86	36
4963	0.015	0.027	85	35
228614003	0.225	0.375	84	34
4965	0.118	0.193	83	33
5052	0.157	0.243	82	32

Cabot Lot No	% Th	% U	Activity % U-238	Rank by %U-238 Activity
5058	0.082	0.126	82	31
5057	0.233	0.336	81	30
4962	0.015	0.021	81	29
228614001	0.263	0.370	81	28
228622001	0.158	0.220	81	27
228621003	0.156	0.215	81	26
5060	0.112	0.140	79	25
228615004	0.185	0.229	79	24
5125	0.120	0.146	79	23
5185	0.015	0.018	78	22
5178	0.032	0.036	**78**	**21**
226589001	0.103	0.118	78	20
5006	0.129	0.147	78	19
5023	0.483	0.543	77	18
228621002	0.172	0.192	77	17
5005	0.120	0.126	76	16
231006001	0.193	0.195	75	15
5059	0.158	0.157	75	14
1010	0.054	0.050	74	13
228615003	0.176	0.153	73	12
228646002	0.176	0.136	70	11
4966	0.160	0.120	70	10
1013	0.172	0.128	69	9

Cabot Lot No	% Th	% U	Activity % U-238	Rank by %U-238 Activity
5021	0.129	0.081	66	8
5022	0.049	0.031	65	7
228615001	0.253	0.153	65	6
5124	0.319	0.165	61	5
1004	0.232	0.058	43	4
4956	1.128	0.251	40	3
4922	0.607	0.086	30	2
5192-ORE	0.962	0.086	22	1
Total				

APPENDIX B

MANUFACTURER'S PROCEDURE FOR RESPIRABLE DUST SAMPLING WITH THE SKC, INC. GS-3 CYCLONE

Operating Instructions

863 Valley View Road, Eighty Four PA 15330 USA
Tel: 724-941-9701 Fax: 724-941-1369 e-mail: skctech@skcinc.com

GS-3 Multiple-inlet Cyclone
Catalog Nos. 225-100 & 225-103

Description

The GS-3 Cyclone is a 10 mm, lightweight, multiple-inlet, conductive plastic sampler that uses a standard 3-piece cassette and filter for the collection of respirable dust particles. Designed to meet the ACGIH-CEN-ISO size-selection curve, the GS-3 Cyclone has a 50% cut-point of 4.0 µm (with bias within ISO/NIOSH requirements) at 2.75 L/min.*

The GS-3 Cyclone can be used with a 25 or 37 mm 3-piece cassette with the corresponding cassette adapter and filter.

Assembly (Figure 1)

1. Disassemble the 3-piece cassette and set aside the inlet section (usually marked "inlet"). Keep the inlet section for closing the cassette after sampling.
2. Select a filter and support pad as specified in the sampling method. Place the support pad into the cassette outlet first and then place the filter on top of the support pad. Insert the cassette ring (middle) section into the cassette outlet.
3. Place the cassette adapter onto the retainer of the cyclone top and press it firmly into place. Insert the cassette adapter/cyclone assembly into the cassette ring.

   The grit pot should remain on the cyclone body during sampling.

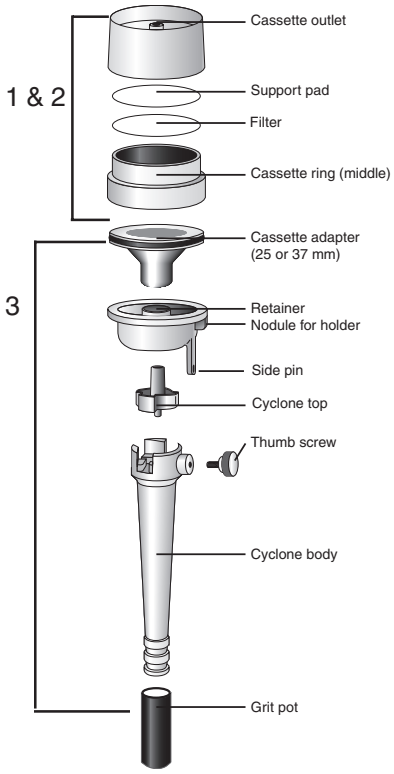

Figure 1
GS-3 Cyclone with Filter Cassette — Exploded View

* *Calibrated at U.K. Health and Safety Laboratories and University of Minnesota (wind tunnel).*

4. Insert the cyclone body through the large opening of the filter cassette holder. Ensure the assembly is seated firmly in the holder by inserting the cyclone's small round nodule on the rim into the notch in the filter cassette holder.

5. Remove the plug from the cassette outlet. Secure the assembly in the holder by stretching the spring-loaded hold-down plate over the cassette. Insert the luer adapter of the filter cassette holder (located on the end of the rubber tubing) into the cassette outlet (see Figure 2).

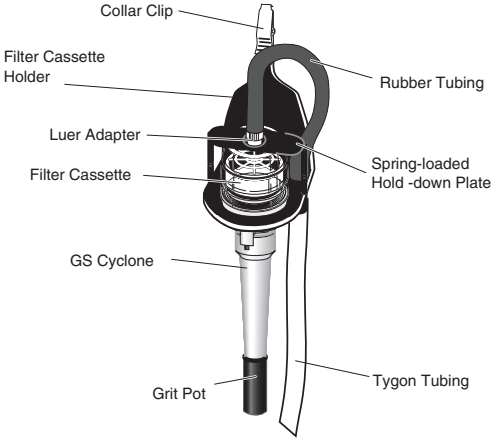

Figure 2
GS-3 Cyclone/Filter Cassette Assembly in Holder

Calibration (Figure 3)

1. Prepare a cassette-cyclone assembly without the filter cassette holder (see Assembly, steps 1-3). The grit pot should remain on the cyclone body during calibration.

2. Remove the plug from the cassette outlet. Place the cyclone assembly in the SKC Multi-purpose Calibration Chamber (see Figure 3).

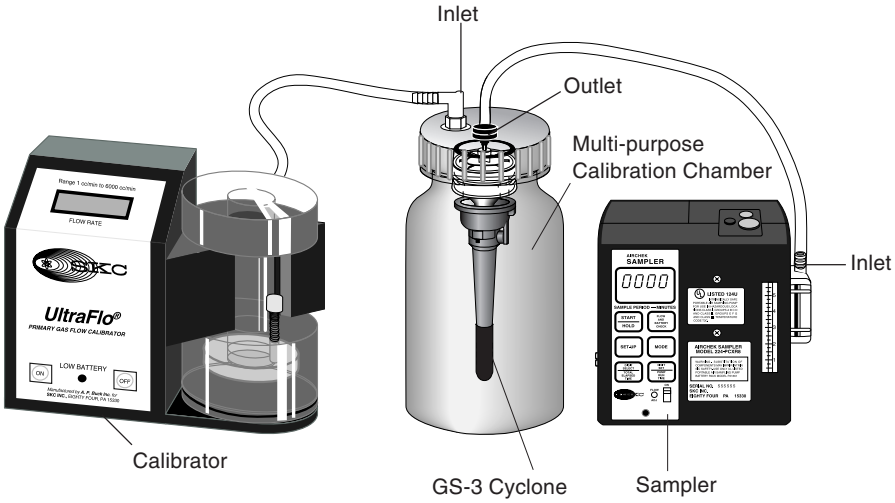

Figure 3

3. Using flexible tubing, connect the tubing from the calibrator to the inlet of the calibration chamber. Run the tubing from the outlet of the cyclone assembly through the outlet of the calibration chamber, and connect it to the inlet of the sampling pump.

4. Calibrate to the desired flow rate using the directions in the pump and calibrator operating manuals.

   Flow rate: 2.75 L/min for a 4.0 μm cut-point

5. After calibration, disconnect the calibrator, remove the cyclone from the calibration chamber, and replace the filter used to set the flow with a fresh, weighed filter for sample collection.

Sampling

1. Ensure the flow rate has been properly set (see Calibration).

   Flow rate: 2.75 L/min for a 4.0 μm cut-point

2. Connect the Tygon® tubing attached to the filter cassette holder to the inlet of a constant flow personal sampling pump.

3. Clip the holder with the cassette/cyclone assembly onto a worker's collar or pocket as close to the breathing zone as possible.

4. Clip the pump onto the worker's belt or place it in a protective pouch. Start the pump and record the start time, worker location, and flow rate.

5. At the end of the sampling period, stop the pump and record the finish time. Remove the cassette/cyclone assembly from the cassette holder. Separate the cyclone from the cassette. Replace the inlet section of the cassette, seal the inlet and outlet sections with the provided plugs, and send the cassette and all data to a laboratory for analysis.

   Note: Particles collected in the grit pot do not represent any part of the respirable dust sample and should be discarded.

Cleaning

After sampling, clean all parts of the cyclone, including the interior of the grit pot, with mild soapy water.

The cyclone can be wiped with a clean dust-free tissue, air dried, blown dry, or wiped with isopropyl alcohol.

Caution: Do not use strong solvents to clean the GS-3 Cyclone.

Reference

Gautam, M. and Sreenath, A., "Performance of a Respirable Multi-Inlet Cyclone Sampler", *J. Aerosol Sci.*, Vol. 28. No. 7, pp. 1265-1281, 1997 (copy available from SKC)

Ordering Information

Description	Catalog No.
GS-3 Cyclone with Cassette Adapter	
25 mm	**225-103**
37 mm	**225-100**
Replacement Cassette Adapter	
25 mm	**225-101**
37 mm	**225-102**
Three-piece Filter Cassette Blanks	
25 mm	**225-3-25**
37 mm	**225-3**
Filter Cassette & Cyclone Holder for attaching cassette and cyclone assembly to worker's clothing	
25 or 37 mm	**225-1**
Multi-purpose Calibration Chamber	**225-111**

Notice: This operating instruction may not address all safety concerns (if any) associated with this product and its use. The user is responsible for determining and following the appropriate safety and health practices and regulatory limitations (if any) before using the product. The information contained in this document should not be construed as legal advice, opinion, or as a final authority on legal or regulatory procedures.

Form #37097 Rev 0202