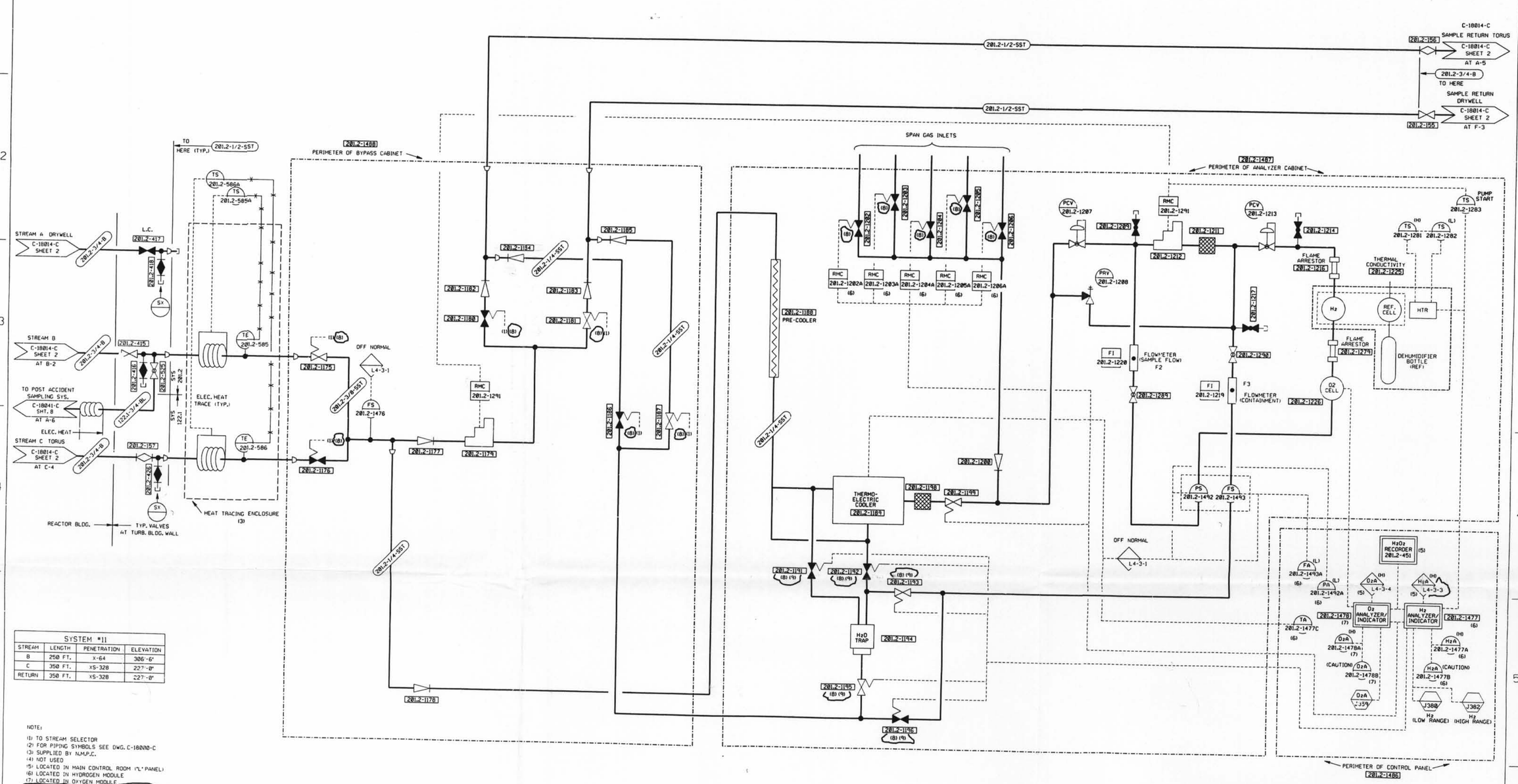

SYSTEM #11			
STREAM	LENGTH	PENETRATION	ELEVATION
B	250 FT.	X-64	306'-6"
C	350 FT.	XS-328	227'-0"
RETURN	350 FT.	XS-328	227'-0"

NOTE:

(1) TO STREAM SELECTOR
(2) FOR PIPING SYMBOLS SEE DWG. C-18000-C
(3) SUPPLIED BY N.M.P.C.
(4) NOT USED
(5) LOCATED IN MAIN CONTROL ROOM ("L" PANEL)
(6) LOCATED IN HYDROGEN MODULE
(7) LOCATED IN OXYGEN MODULE
(8) SOVs FAIL CLOSED WHEN DE-ENERGIZED.
(9) WATER PURGE VALVES ARE SHOWN IN THE "PURGE" POSITION. THEY ARE NORMALLY IN THE OPPOSITE POSITION.

CRITICAL DRAWING

NOTE: THIS DRAWING WAS CREATED USING COMPUTER AIDED DRAFTING DO NOT MAKE MANUAL CHANGES

ORIGINAL

REV	DATE	BY	REMARKS	CK	APP	MF
16	10/4/00	PMJ	INC. DDC1M00011			
15	12/7/95	JAP	REVISED AND REDRAWN PER MOD N193013 INC PER N193013LG001,N194001LG296 INC PER N193013LG015, LG024 (N-STATUS)			

NIAGARA MOHAWK

STA NINE MILE POINT NUCLEAR STATION UNIT NO. 1

ACC NO

APP LNM | APP

APP WM | APP

APP | DATE 6-17-76

DES | DR | DR CK DB

MF | SCALE NONE

PRIMARY CONTAINMENT ATMOSPHERE
H_2-O_2 MONITOR SYSTEM #11
P & I DIAGRAM

DWG NO C-26949-C | INDEX 3-N2.1-S18.9 | SH

TAMERAN