D-1

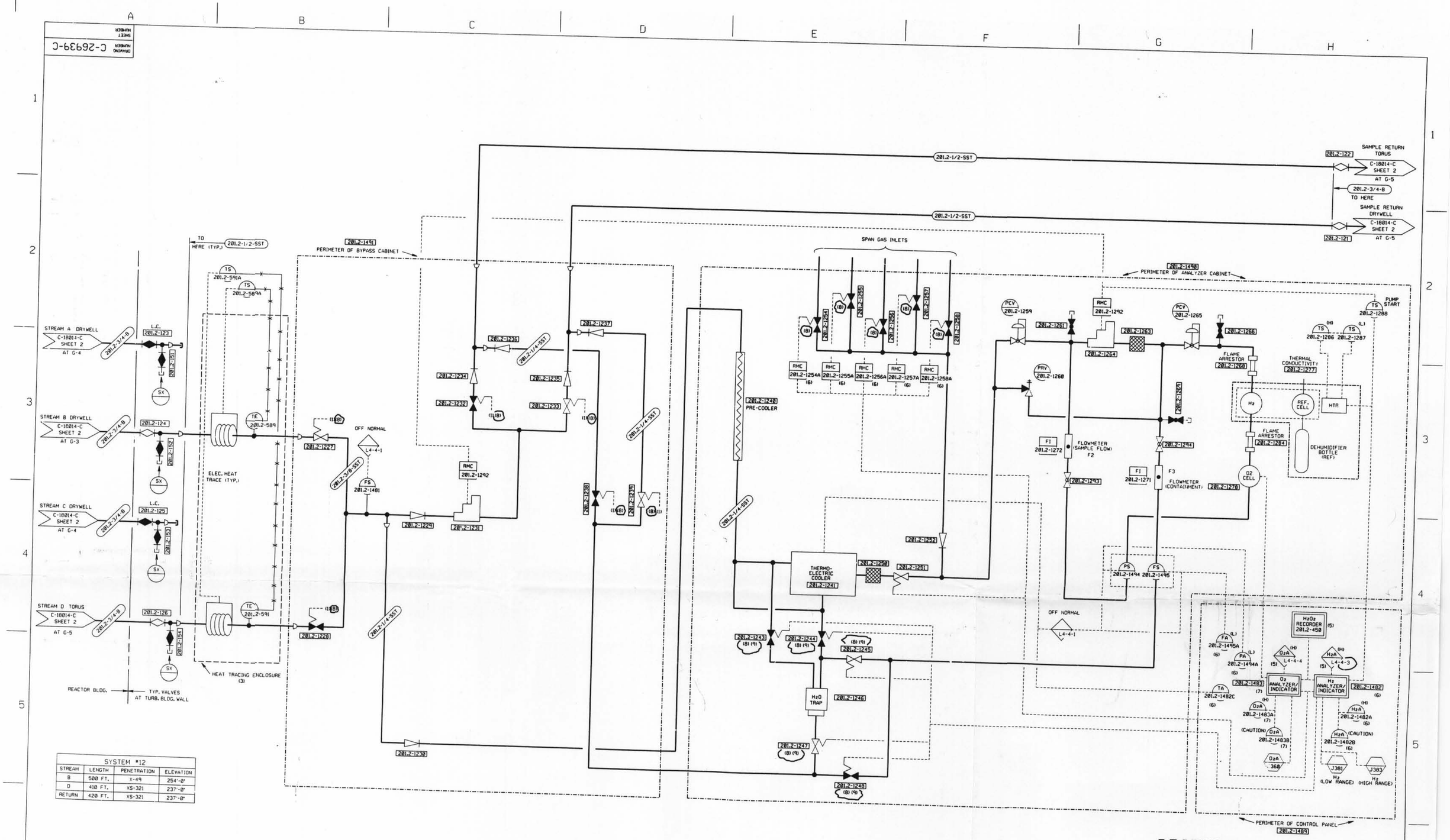

SYSTEM #12			
STREAM	LENGTH	PENETRATION	ELEVATION
B	500 FT.	X-49	254'-0"
D	410 FT.	XS-321	237'-0"
RETURN	420 FT.	XS-321	237'-0"

NOTE:

(1) TO STREAM SELECTOR
(2) FOR PIPING SYMBOLS SEE DWG. C-18000-C
(3) SUPPLIED BY NMPC
(4) NOT USED
(5) LOCATED IN MAIN CONTROL ROOM ("L" PANEL)
(6) LOCATED IN HYDROGEN MODULE
(7) LOCATED IN OXYGEN MODULE
(8) SOV's FAIL CLOSED WHEN DE-ENERGIZED.
(9) WATER PURGE VALVES ARE SHOWN IN THE "PURGE" POSITION. THEY ARE NORMALLY IN THE OPPOSITE POSITION.

CRITICAL DRAWING

NOTE: THIS DRAWING WAS CREATED USING COMPUTER AIDED DRAFTING DO NOT MAKE MANUAL CHANGES

ORIGINAL

REV	DATE	BY	REMARKS	CK	APP	MF
13	10/5/00	PMJ	INC. DOC 1M00011			
12	12/7/95	JAP	REVISED AND REDRAWN PER MOD N193013 INC PER N193013LG01ELG024,LG055 IN-STATUS) INC PER N193013LG060,N194001LG296			

NIAGARA MOHAWK

STA: NINE MILE POINT NUCLEAR STATION UNIT NO. 1

ACC NO

PRIMARY CONTAINMENT ATMOSPHERE
H2-O2 MONITOR SYSTEM #12
P & I DIAGRAM

APP LNM APP
APP WM APP
APP DATE 6-17-76
DES DR JRK DR CK DB
MF SCALE NONE
DWG NO C-26939-C
INDEX 3-N2.1-S18.9
SH

D-1