71-9261
72-1008
72-1014

UNITED STATES
NUCLEAR REGULATORY COMMISSION
WASHINGTON, D.C. 20555-0001

February 27, 1997

See Reports

MEMORANDUM TO: Charles J. Haughney, Acting Director
Spent Fuel Project Office
Office of Nuclear Material Safety
and Safeguards

FROM: Mark S. Delligatti, Senior Project Manager
Spent Fuel Licensing Section
Spent Fuel Project Office
Office of Nuclear Material Safety
and Safeguards

SUBJECT: SUMMARY OF THE FEBRUARY 10, 1997, MEETING BETWEEN THE NUCLEAR REGULATORY COMMISSION STAFF AND HOLTEC INTERNATIONAL CORPORATION

Staff from the U.S. Nuclear Regulatory Commission met with representatives of Holtec International Corporation (Holtec) on February 10, 1997, at NRC Headquarters in Rockville, Maryland. The purpose of the meeting was to discuss major changes in Holtec's recently submitted Revision 4 to its Safety Analysis Report and Topical Safety Analysis Report for the HI-STAR 100 cask system. Also attending the meeting were representatives of Commonwealth Edison, Northern States Power/Private Storage, American Electric Power, the Ibex Group, and Lawrence Livermore National Laboratories. An attendance list is included as Attachment 1. This meeting was noticed on January 24, 1997. Proprietary information associated with Holtec's thermal approach was discussed in an initial closed session of the meeting. Attachments 2-5 are copies of the slides used by Holtec in its non-proprietary presentation.

Holtec discussed several of the staff's concerns regarding structural aspects of the transportation cask. The impact analysis for the free-drop conditions was described. Impact limiter crush strength and deformation relationships will be verified by 1/8 scale model testing. Holtec also stated that the analysis results for the 30 foot drops are less than the 60g used in design. The analysis results will be confirmed by four actual 30-foot drop impact tests using 1/4 scale models. Holtec has modified its transport tie-down system to meet the requirements of 10 CFR Part 71. The overpack bolt analysis is now based on NUREG/CR6007. The overpack stress analysis will be based on a 3-D finite element model to simulate weight and load distribution. Both the multi-purpose canister and the overpack stress analysis have shown that stresses are within the allowable stress limits of the appropriate ASME Code. The staff noted that cask slapdown may result in higher decelerations at the cask top and bottom than what is calculated for the center of gravity of a transportation cask. This accident scenario may have to be reexamined by Holtec to upgrade the design basis decelerations for certain critical components of the packaging.

NT03
1/1

Regarding shielding, Holtec described changes from its previous submittal on the design basis source terms, selection of the bounding fuel elements, the

030087

NRC FILE CENTER COPY

9703030520 970227
PDR ADOCK 07109261
C PDR

ATTENDANCE LIST
MEETING BETWEEN THE U.S. NUCLEAR REGULATORY COMMISSION
AND HOLTEC INTERNATIONAL
FEBRUARY 10, 1997

NAME	ORGANIZATION
Charles J. Haughney	NRC/SFPO
Mark Delligatti	NRC/SFPO
Marissa Bailey	NRC/SFPO
Michael Franovich	NRC/SFPO
Fritz Sturz	NRC/SFPO
David Tang	NRC/SFPO
Steve Hogsett	NRC/SFPO
Mike Waters	NRC/SFPO
Everett Redmond II	Holtec
Stan Turner	Holtec
Indresh Rampall	Holtec
Alan Soler	Holtec
K. P. Singh	Holtec
Gary Tjersland	Holtec
Eric G. Lewis	AEP
Thomas L. Nauman	ComEd
Robert E. Sweeney	IBEX
Garry R. Thomas	LLNL

ATTACHMENT 1

overall shielding configuration, analytical methods, and normal and accident condition dose rate calculations. Holtec also described its evaluation of radiation streaming and the design modifications that address this concern. Holtec's representatives discussed basket closure welds. The NRC staff, in its initial criticality review, had previously requested that the basket closure welds and the surrounding area be nondestructively examined using a volumetric technique like ultrasonic testing (UT). Based on Holtec's current proposed configuration, only the inner most weld would need to be examined since it is significantly larger than the closure ring weld. The NRC staff also expressed concerns about the design of the weld joint for the closure weld for confinement/containment. The concerns include structural integrity, weldability, and inspectability of this important joint. There was also a concern expressed about the "double containment" function of two closely spaced welds.

Previously, Holtec had been reluctant to commit to performing the UT based on ALARA concerns. Now Holtec expressed concerns about the feasibility of UT. The staff, however, believes that UT is justified for the following reasons: weld integrity is critical to lifting the basket; the weld maintains the pressure integrity of the basket which is crucial to the Holtec design (i.e. leak tightness); there are concerns regarding the weldability of this joint like distortion and burn-through; and the proposed surface examination alone does not meet the ASME Section III, Subsection NB requirements for volumetric examination of pressure boundary components. The staff believes that if Holtec wishes to avoid performing the UT, a conclusive demonstration that the UT cannot be performed for this configuration is necessary.

Holtec also briefly discussed the group of stainless steel alloys, called Alloy X, proposed for use in construction.

Please let me know if you wish to discuss the contents of the meeting summary.

Attachments:
1. Attendance List
2. Cask System Slides
3. Criticality Safety Analysis Slides
4. System Characteristics Slides
5. Confinement and Containment Slides

Dockets 72-1008
71-9261
72-1014

Distribution: (w/o attachments)

Dockets 72-1008, 71-9261, 72-1014		NRC File Center	PUBLIC	NMSS R/F
SFPO R/F	SShankman	PEng	FCSturz	EEaston
JJankovich	WReamer, OGC	MWebb, NRR	JHopkins, RIII	
NRC Attendees				

OFC	SFPO	3E	SFPO	C	SFPO	E				
NAME	VTharpe		MDelligatti		EJLeeds					
DATE	02/26/97		02/26/97		2/26/97					

C = COVER E = COVER & ENCLOSURE N = NO COPY
OFFICIAL RECORD COPY G:\HOLTEC\HOLTFEB.MIN

2/27/97 :dd

HOLTEC INTERNATIONAL'S

HI-STAR 100 CASK SYSTEM

USNRC MEETING

FEBRUARY 10, 1997

ATTACHMENT 2

AGENDA
USNRC/HOLTEC INTERNATIONAL MEETING
FEBRUARY 10, 1997

• OPENING REMARKS	NRC/HOLTEC
• HI-STAR APPLICATION/DESIGN REVISION PROCESS	G. TJERSLAND
• MAJOR DESIGN IMPROVEMENTS INCORPORATED INTO HI-STAR DESIGN (REV. 4)	G. TJERSLAND
• PROPRIETARY DISCUSSIONS ON HI-STAR DESIGN BASELINE	
- HI-STAR 100 SYSTEM CHARACTERISTICS	K. SINGH
- STORAGE	K. SINGH
- STRUCTURAL EVALUATIONS	A. SOLER
- THERMAL EVALUATIONS	I. RAMPALL
• BREAK	
• NON-PROPRIETARY SUMMARY OF STRUCTURAL AND THERMAL DISCUSSIONS	G. TJERSLAND
• HI-STAR BASELINE DISCUSSIONS (CONTD.)	
- TRANSPORT STRUCTURAL EVALUATIONS	A. SOLER

AGENDA (CONTINUED)

- LUNCH (12:00 - 1:00)
- HI-STAR DESIGN BASELINE DISCUSSIONS (CONTD.)
  - SHIELDING — E. REDMOND
  - CRITICALITY — S. TURNER
  - CONTAINMENT/CONFINEMENT — S. AGACE
  - OPERATIONS AND TESTING — S. AGACE
- PROTOTYPE FABRICATION ISSUES — K. SINGH
- DISCUSSION OF SCHEDULE OF NRC STAFF'S REVIEW — NRC
- CLOSING REMARKS — NRC/HOLTEC/ ComEd

HI-STAR APPLICATION/ DESIGN REVISION PROCESS

- INITIAL APPLICATIONS

  - HI-STAR STORAGE APPLICATION (TSAR) SUBMITTED IN AUGUST 1994

  - HI-STAR TRANSPORT APPLICATION (SAR) SUBMITTED IN FEBRUARY 1995

  - TSAR AND SAR REVISED THREE TIMES TO INCORPORATE DOE MPC SPECIFICATION CHANGES AND DRESDEN 1 FUEL CONDITIONS

- NRC 1ST ROUND RAIs ISSUED ON MARCH 27, 1996 AND JULY 10, 1996

HI-STAR APPLICATION/ DESIGN REVISION PROCESS (CONTINUED)

- NRC/HOLTEC MEETING HELD ON APRIL 23, 1996 TO DISCUSS AND REVIEW NRC RAIs AND HOLTEC'S ACTION PLAN

- HOLTEC PROPOSED, DEVELOPED AND IMPLEMENTED IMPROVED PROJECT DESIGN CONTROL PROCEDURES FOR MULTI-DISCIPLINARY REVIEWS ON HI-STAR PROGRAM

- NRC PERFORMED INSPECTION OF HOLTEC CASK DESIGN AND CONTROL PROCESSES ON JUNE 25-27, 1996. RESULTS REPORTED IN NRC INSPECTION REPORT NO. 72-1008/96-205. SEVERAL OBSERVATIONS NOTED.

HI-STAR APPLICATION/ DESIGN REVISION PROCESS (CONTINUED)

- HOLTEC IMPLEMENTED CORRECTIVE ACTIONS TO RESOLVE THE NRC OBSERVATIONS AND FURTHER IMPROVED DESIGN CONTROL PROCESS

- EFFECTIVE IMPLEMENTATION OF HOLTEC QA PROGRAM VERIFIED BY RECENT INTERNAL AND EXTERNAL AUDITS (ComEd, NUPIC, UST&D)

- HOLTEC'S QA PROGRAM HAS OVER 10 YEARS OF PROVEN EFFECTIVENESS IN THE SUPPLY OF NRC APPROVED WET SPENT FUEL STORAGE SYSTEMS. SAME MAJOR SUBCONTRACTORS (UST&D AND AAR) WILL BE UTILIZED IN THE HI-STAR FABRICATION.

- REVISED HI-STAR SAR, TSAR AND ANALYSIS REPORTS INDEPENDENTLY REVIEWED BY ComEd, SCIENTECH, INC. AND DUKE ENGINEERING & SERVICES TO VERIFY COMPLIANCE WITH 10CFR71 AND 10CFR72 AND OTHER DESIGN BASES DOCUMENTS

- REVISED APPLICATIONS SUBMITTED TO USNRC IN SEPTEMBER AND OCTOBER, 1996

MAJOR DESIGN IMPROVEMENTS INCORPORATED INTO HI-STAR DESIGN IN SAR/TSAR REVISION 4

- INCREASED OVERPACK LENGTH AND CAVITY LENGTH TO ACCOMMODATE INCREASE IN OVERALL LENGTH OF MPC (DUE TO MPC LID REDESIGN) - TO IMPROVE SHIELD DESIGN IN UPPER FORGING TRANSITION REGION

- MPC LID REDESIGNED WITH AN INCREASE IN LID THICKNESS TO 9.5 INCHES ON MPC-24 & 32 AND 10 INCHES ON MPC-68 - TO IMPROVE ALARA FOR CANISTER LOADING AND UNLOADING OPERATIONS, AND IMPROVE SHIELD DESIGN IN UPPER TRANSITION

- MODIFIED MPC CLOSURE DESIGN TO A SINGLE MPC LID WITH A CLOSURE RING. CLOSURE RING PROVIDES REDUNDANT SEALING OF CLOSURE WELDS - ALLOWS MAXIMUM MPC LID THICKNESS TO IMPROVE ALARA FOR OPERATIONS AND TO SIMPLIFY WELDING OPERATIONS.

- UPPER AND LOWER FORGING RADIAL THICKNESSES INCREASED - TO IMPROVE SHIELDING DESIGN IN TRANSITION REGIONS

MAJOR DESIGN IMPROVEMENTS INCORPORATED INTO HI-STAR DESIGN IN SAR/TSAR REVISION 4

- COMMERCIAL AND PREVIOUSLY APPROVED PRODUCT SPECIFIED FOR NEUTRON SHIELDING. NEUTRON SHIELD DESIGN INCORPATES LAYER OF EXPANSION FOAM TO ACCOMMODATE DIFFERENTIAL THERMAL EXPANSION WITH RADIAL CHANNELS.

- BASKET AND BORAL LENGTHS INCREASED TO ENSURE FULL NEUTRON ABSORBER COVERAGE OF ACTIVE FUEL REGIONS FOR ALL ACCEPTABLE FUEL TYPES UNDER ALL NORMAL AND ACCIDENT CONDITIONS

- REMOVABLE REAR TRUNNIONS REPLACED WITH WELDED REAR POCKET TRUNNIONS - IMPROVES ALARA FOR OPERATIONS, SECURES INTERMEDIATE SHELLS DURING AXIAL ACCIDENT CONDITIONS, AND IMPROVES CASK HANDLING CAPABILITIES

- STAINLESS STEEL CLADDING ADDED TO MECHANICAL SEALING SURFACES OF OVERPACK AND CLOSURE PLATE - TO ASSURE LONG TERM SEAL PERFORMANCE FOR STORAGE

HI-STAR 100 CONTENT CONDITIONS

CANISTER DESIGN	MPC-24		MPC-68		MPC-32	
DESIGN PARAMETER	STORAGE	TRANSPORT	STORAGE	TRANSPORT	STORAGE	TRANSPORT
CAPACITY	24 PWR	24 PWR	68 BWR	68 BWR	32 PWR	32 PWR
Maximum Average Burnup(s) (MWD/MTU)	40,000 (@ 5) 42,500 (@ 6) 45,000 (@ 7) 47,500 (@ 8)	40,000 (@ 10) 42,500 (@ 13) 45,000 (@ 15) 47,500 (@ 18)	40,000 (@ 5) 42,500 (@ 6) 45,000 (@ 7)	40,000 (@ 10) 42,500 (@ 13) 45,000 (@ 15) 47,500 (@ 18)	40,000	40,000
Minimum Cooling Time (Years)	5	10	5	10	8	18
Decay Heat Load - per assembly (Watts) - per canister (kw)	 1093 26.2	 699 16.8	 371 25.2	 244 16.6	 774 24.8	 567 18.1
Fuel Enrichment (w/o U235)	4.1-4.6	4.1-4.6	4.2	4.2	5.0 (w/ Boron credit)	1.9

SUMMARY OF PROPRIETARY SESSION

- HI-STAR SEISMIC LIMITS
  - 0.45G DYNAMIC STABILITY
  - > 0.45G REQUIRES STABILIZATION
- HANDLING HEIGHTS VS. PAD STIFFNESS VALUE SET BY DESIGN BASIS G LEVEL.
- HI-STAR TIPOVER SETS ISFSI MAX. STIFFNESS

HI-STAR 100 SYSTEM
Structural Evaluation
NON-PROPRIETARY

Dr. Alan Soler

Holtec International

TOPICS TO BE SUMMARIZED

- FREE DROP ANALYSES
- TIE-DOWN SYSTEM
- OVERPACK BOLTING ANALYSES
- MPC STRESS ANALYSIS
- OVERPACK STRESS ANALYSIS

FREE DROP OF HI-STAR 100

- IMPACT LIMITER FORCE VS. CRUSH DEPTH ESTABLISHED BY SOLID MODELING TO DEVELOP "BACKED AREA" VS. DEPTH FOR DIFFERENT DROP ANGLES.
- ANALYTICAL FORCE VS CRUSH DATA DEVELOPED BY CURVE FIT.
- ASSUMED CRUSH STRENGTH BEHAVIOR OF ENERGY ABSORBING MATERIAL CONFIRMED BY 1/8 MODEL TESTING.

FREE DROP OF HI-STAR 100

- DYNAMIC ANALYSES OF DROP EVENTS ARE SOLELY TO PREDICT EXPECTED PEAK G LEVELS FOR VARIOUS POSTULATED DROP ORIENTATIONS.
- CONFIRMATION OF ANALYSIS WILL BE BY 1/4 SCALE TESTING WITH ACCELEROMETERS.

FREE DROP OF HI-STAR 100

- ANALYSIS MODEL CONSERVATIVELY NEGLECTS:
  - STRUCTURAL/IMPACT DAMPING
  - ENERGY ABSORPTION BY CASK
- ASSUMPTIONS MAXIMIZE DECELERATION PREDICTIONS
- ANALYSIS MODEL USES ACCURATE INERTIA AND MASS DISTRIBUTION

FREE DROP MODELING REQUIREMENTS

- MODEL CONTACTS BETWEEN CASK AND UNYIELDING SURFACE
- MODEL DEFORMATION DEPENDENT IMPACT LIMITER FORCE RESISTANCE
- MODEL PRIMARY AND SECONDARY IMPACT
- MODEL CORRECTLY LOCATES POINTS OF APPLICATION OF RESISTING FORCE AS CASK ROTATES.

FREE DROP OF HI-STAR 100

- "WORKING MODEL 3.0"
  - COMMERCIAL CODE
  - INDEPENDENT VALIDATION BY HOLTEC.
  - SIMULATES FINITE ROTATIONS AND MULTI-BODY CONTACT
- FIGURE 2.H. SHOWS MODEL

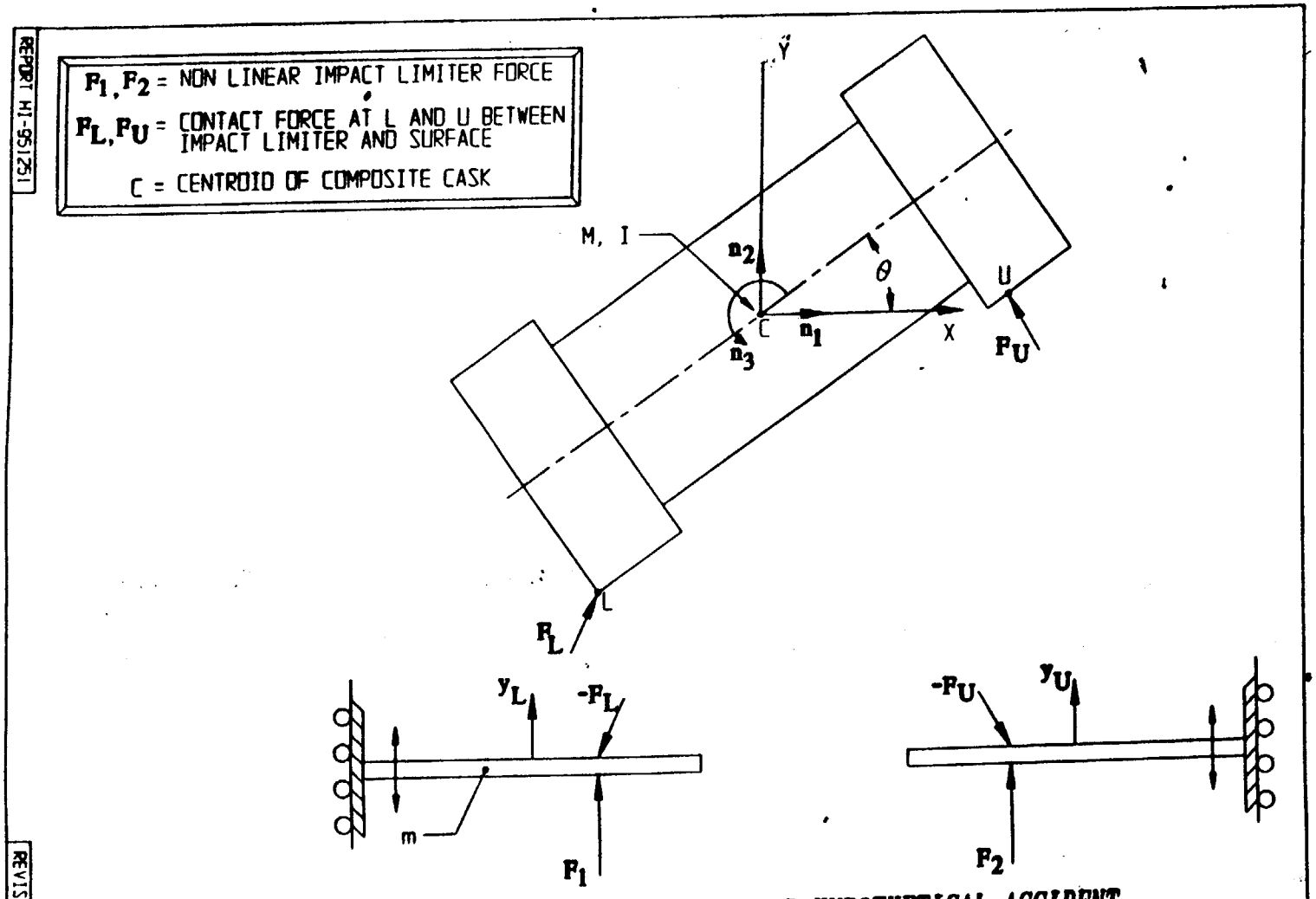

FIGURE 2.H.2; FREE BODY DIAGRAM FOR HYPOTHETICAL ACCIDENT

RESULTS OF DROP SIMULATIONS

- SIDE DROP - 44 G VERTICAL
- SLAPDOWN FROM 15 DEGREES - 57.5 G VERTICAL
  - CORRESPONDS TO 52.43 G LATERALLY
- CG OVER CORNER 36.5 G VERTICAL
- END DROP - 38 G VERTICAL
- **HI-STAR DESIGN BASIS IS 60G**

CONCLUSIONS

- DYNAMIC ANALYSIS RESULTS PREDICT 52.43G IS MAXIMUM LATERAL VALUE ON FUEL BASKET Vs. 60G DESIGN BASIS.
- DYNAMIC ANALYSIS INDICATES NO LIMITER LOCK-UP OR HARD POINT CONTACT.

TRANSPORT TIE-DOWN SYSTEM

- INPUT G LEVELS PER TRANSPORT REGULATIONS (10/5/2 G'S) SET LOADS TO EVALUATE MARGINS
- MOVEMENT TOWARD TOP END RESISTED BY SHEAR RING.
- MOVEMENT TOWARD BOTTOM END RESISTED BY POCKET TRUNNION.
- FIGURE SHOWS CASK IN-PLACE

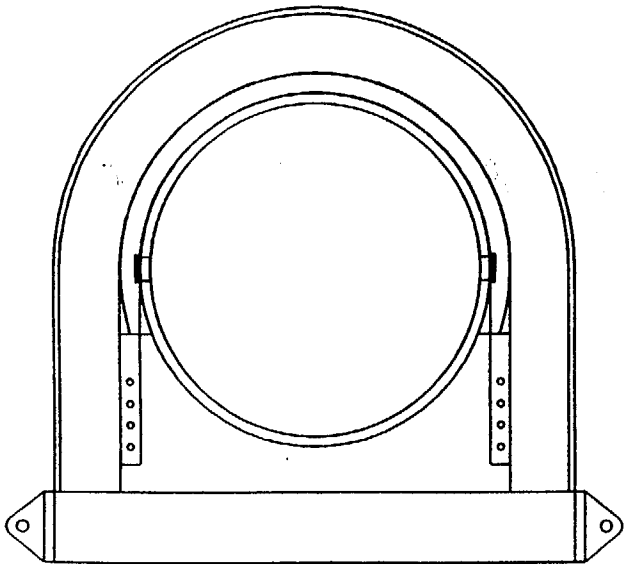

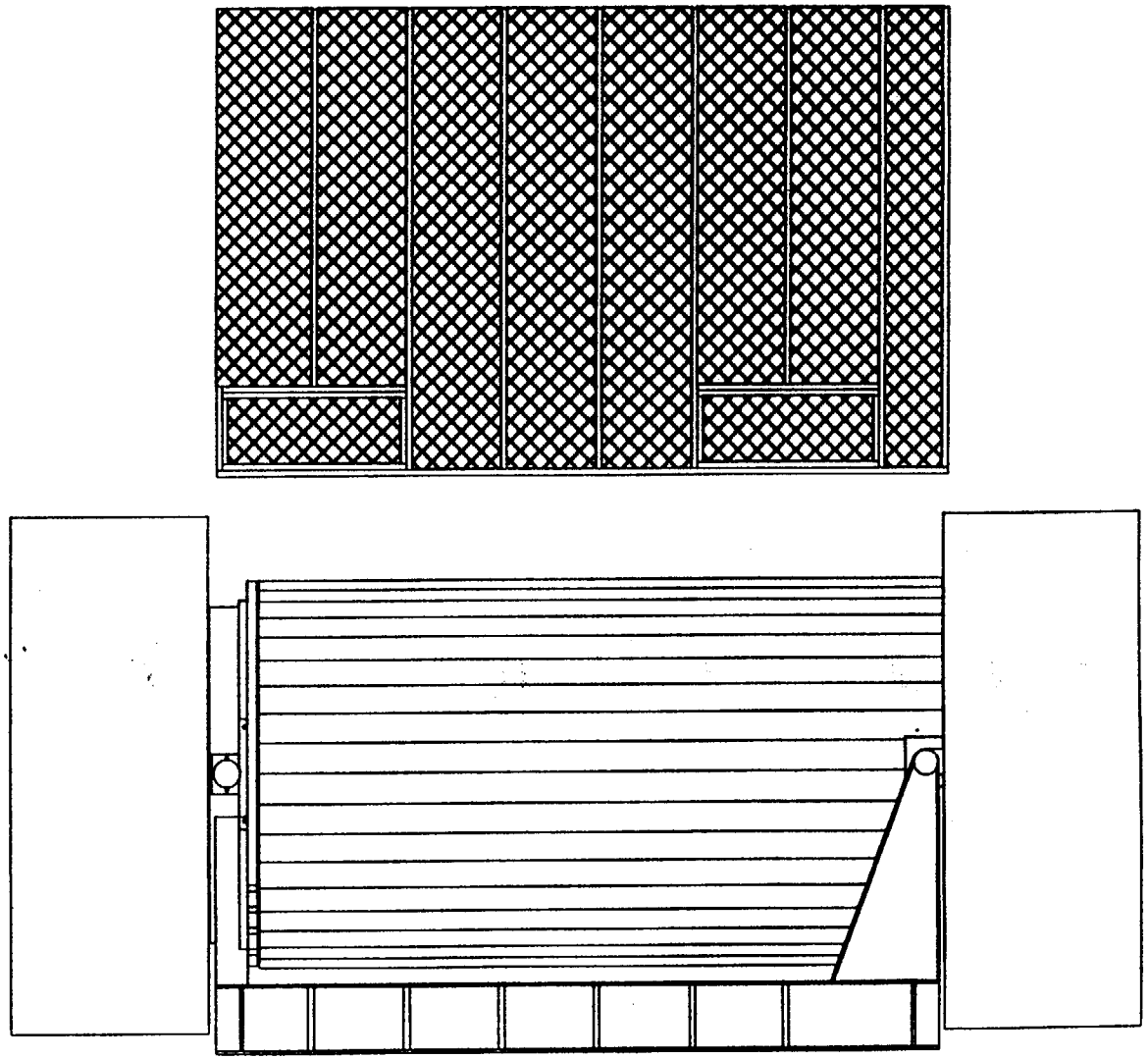

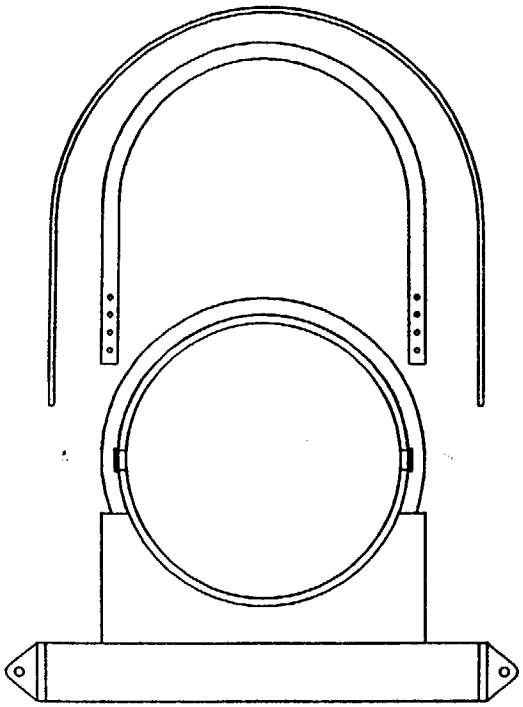

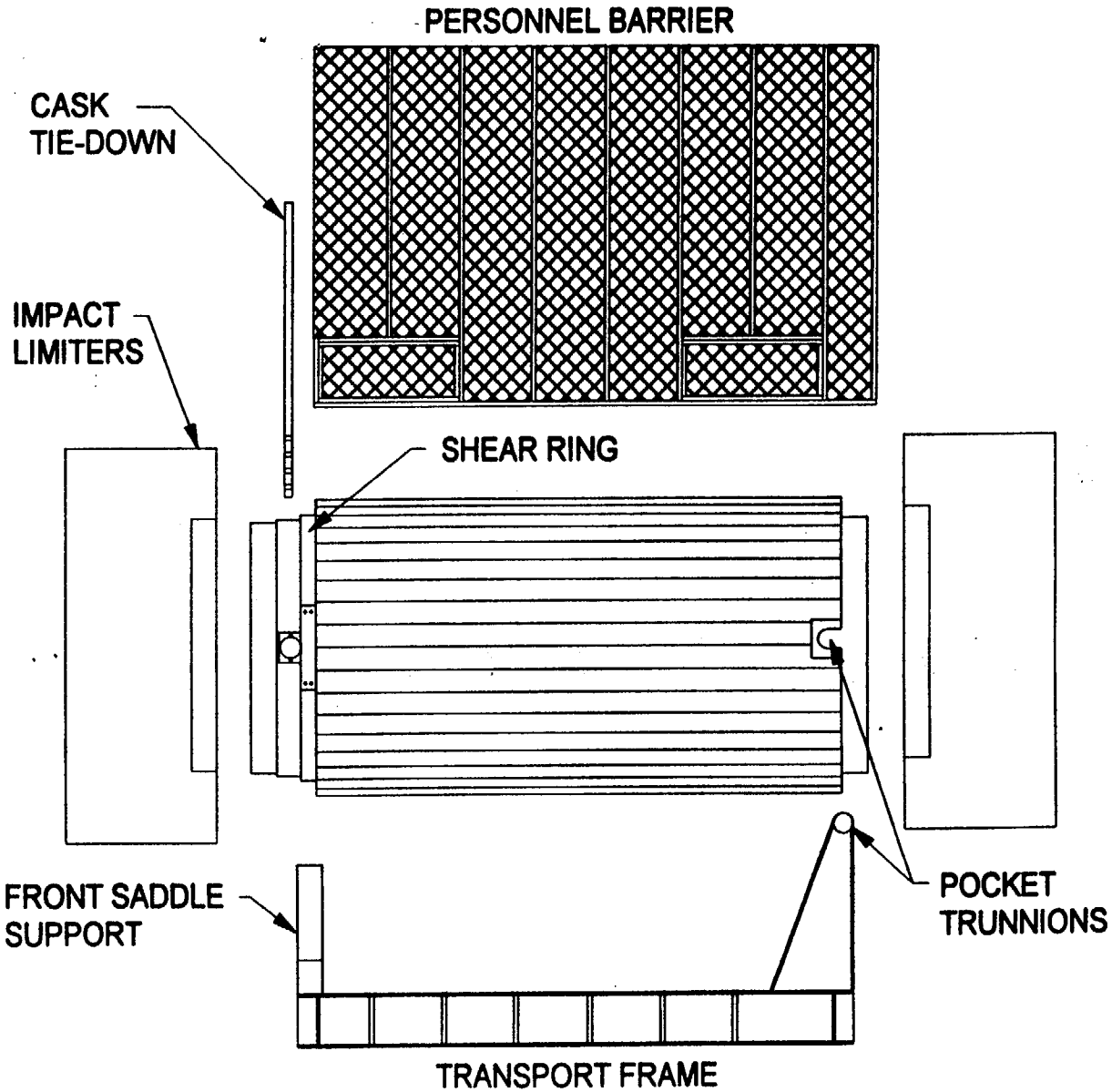
PERSONNEL BARRIER
CASK
TIE-DOWN
IMPACT
LIMITERS
SHEAR RING
FRONT SADDLE
SUPPORT
POCKET
TRUNNIONS
TRANSPORT FRAME

TRANSPORT TIE-DOWN

- SAFETY MARGINS BASED ON ASME NF LEVEL A LIMITS WITH WORST ORIENTATION OF LOADS ACTING SIMULTANEOUSLY
- SAFETY MARGINS COMPUTED FOR:
  - POCKET TRUNNION BODY - .402
  - POCKET TRUNNION WELD - > .108
  - SHEAR RING WELD - 0.435
- MARGINS IN CASK BODY NOT LIMITING

OVERPACK BOLTING

- TOP CLOSURE BOLT ANALYSES
  - INCLUDED IN 3-D FINITE ELEMENT MODEL OF OVERPACK
  - USING METHODOLOGY OF LLNL REPORT ON CLOSURE BOLTS, NUREG/CR6007, 1993.
- ANALYSES EVALUATES:
  - BOLT STRESSES - DROPS
  - BOLT UNLOADING - DROPS AND FIRE

OVERPACK BOLTING

- BOTH METHODOLOGIES INDEPENDENTLY CONFIRM THAT BOLTS MEET REQUIREMENTS:
  - CODE STRESS LEVELS BELOW LIMITS FOR BOTH NORMAL AND ACCIDENT CONDITIONS.
  - NO DIFFERENTIAL EXPANSION TO THE EXTENT THAT PRELOAD IS REMOVED.
  -

MPC STRESS ANALYSIS

- STRUCTURAL INTEGRITY EVALUATIONS TO LIMITS OF ASME SECTION III, SUBSECTION NG (Stress Intensity rather than Maximum Stress)
- ANALYSIS IS NON-LINEAR BECAUSE GAP CLOSURES ARE EVALUATED AT EVERY STEP (BASKET-TO-SUPPORTS AND CANISTER-TO-OVERPACK).

CONSERVATISM IN MPC STRESS RESULTS

- SAFETY FACTORS BASED ON 60G LOAD AND ALLOWABLE STRENGTH AT DESIGN TEMPERATURE NOT ON ACTUAL TEMPERATURE AT STRESS LOCATION.
- FUEL ASSEMBLY 60G LOADING CONSERVATIVELY APPLIED AS UNIFORM PRESSURE OVER FULL WIDTH OF CELL.
- INCREASE IN CROSS SECTION FROM WELDS CONSERVATIVELY NEGLECTED

MPC SAFETY FACTORS

- 1-FT DROP (17G) SF = 1.26 > 1.0
- 30-FT DROP (60G) SF = 1.16 > 1.0
- NOTE THAT DYNAMIC LOAD FACTOR FOR MPC < 1.08

STABILITY ANALYSES

- CYLINDRICAL SECTIONS UNDER PRESSURE AND LONGITUDINAL LOAD SATISFY LIMITS SET BY CODE CASE N-284.
- FUEL BASKET STRAIGHT SECTIONS SATISFY CODE REQUIREMENT OF SAFETY FACTOR OF 1.5 FOR BUCKLING(ONSET OF LARGE DEFORMATION WITH SMALL CHANGE IN APPLIED LOAD.
  - FIGURE 2.6.24 SHOWS ANALYSIS

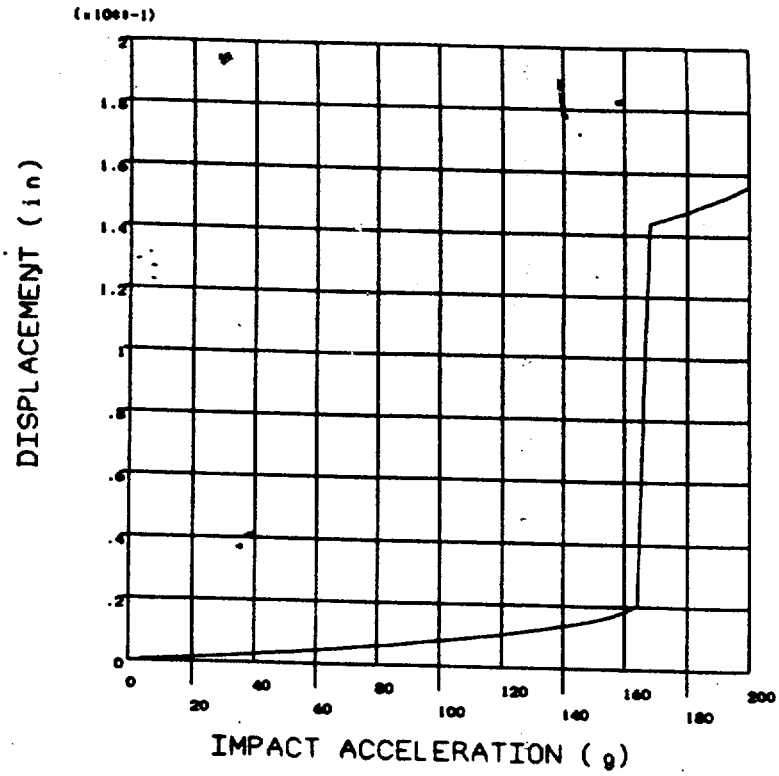

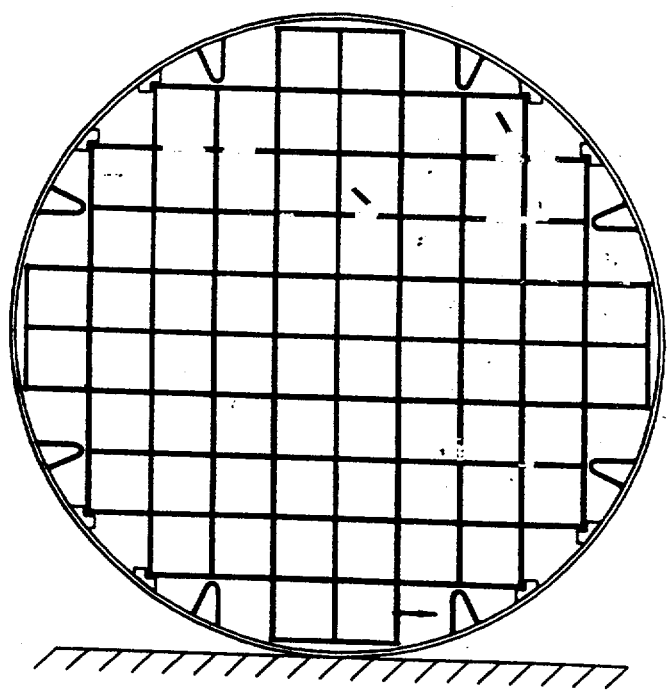

FIGURE 2.6.24; NON-LINEAR BUCKLING ANALYSIS FOR MPC-68
DISPLACEMENT Vs. IMPACT ACCELERATION (0° DROP)

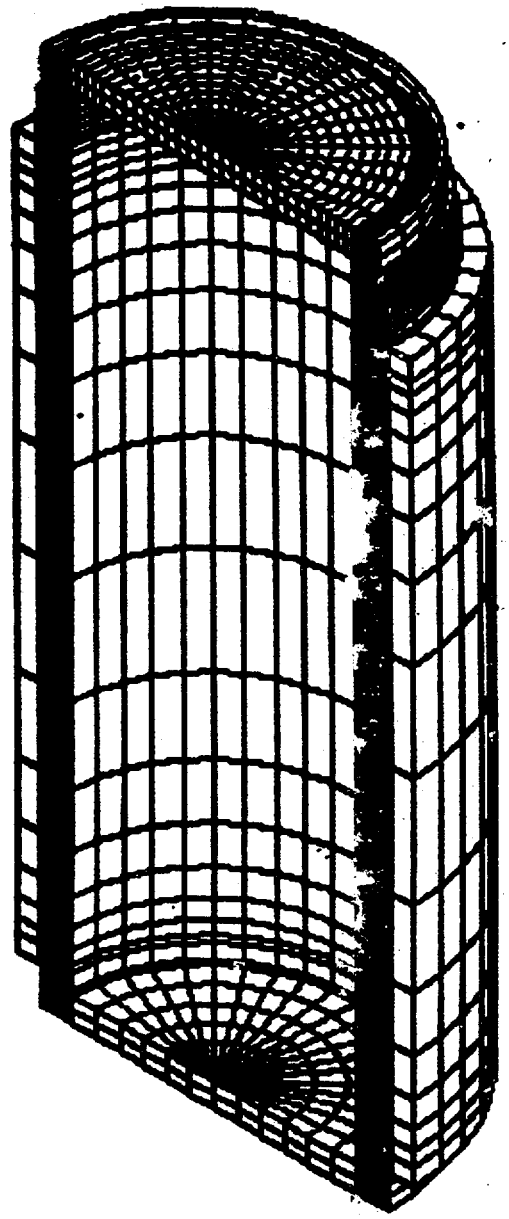

FIGURE 2.6.16; OVERPACK FINITE ELEMENT MODEL

OVERPACK STRESS ANALYSIS

- HALF SECTION 3-D FINITE ELEMENT MODEL ACCURATELY SIMULATES WEIGHT DISTRIBUTION AND CONSERVATIVELY MODELS LOAD PATHS.
- LOADING IMPOSED BY AMPLIFYING GRAVITY.
- SAFETY FACTORS COMPARED TO PRIMARY MEMBRANE PLUS BENDING ALLOWABLE EVERYWHERE IN CASK.

REPRESENTATIVE SAFETY FACTORS - OVERPACK

- BASED ON DESIGN TEMPERATURE ALLOWABLE STRENGTH FOR CONSERVATISM
- ANYWHERE IN UNIT SF=1.45
- THICK STRUCTURAL SHELL FOR SAME CASE SF = 2.84

HI-STAR 100 CASK SYSTEM SHIELDING ANALYSIS

Everett Redmond II

Holtec International

Radiation Source Terms

Calculated with
SAS2H and ORIGEN-S
modules
from
SCALE 4.3

Design Basis Fuel

After reviewing various fuel elements the following were chosen as bounding design basis fuel elements

PWR fuel : B&W 15x15

BWR fuel: GE 8x8R

Cobalt Activation of End Fittings

- Activity calculated with ORIGEN-S
- Co-59 impurity level of 1 gm/kg assumed
- Steel mass of end fittings from design basis fuel elements used to calculate activity
- Scaling factors from 1989 PNL report by Luksic used to adjust activity for the desired location

ACCEPTABLE BURNUP AND COOLING TIME FOR DECAY HEAT AND RADIATION SOURCE TERMS
BURNUP VS. COOLING TIME

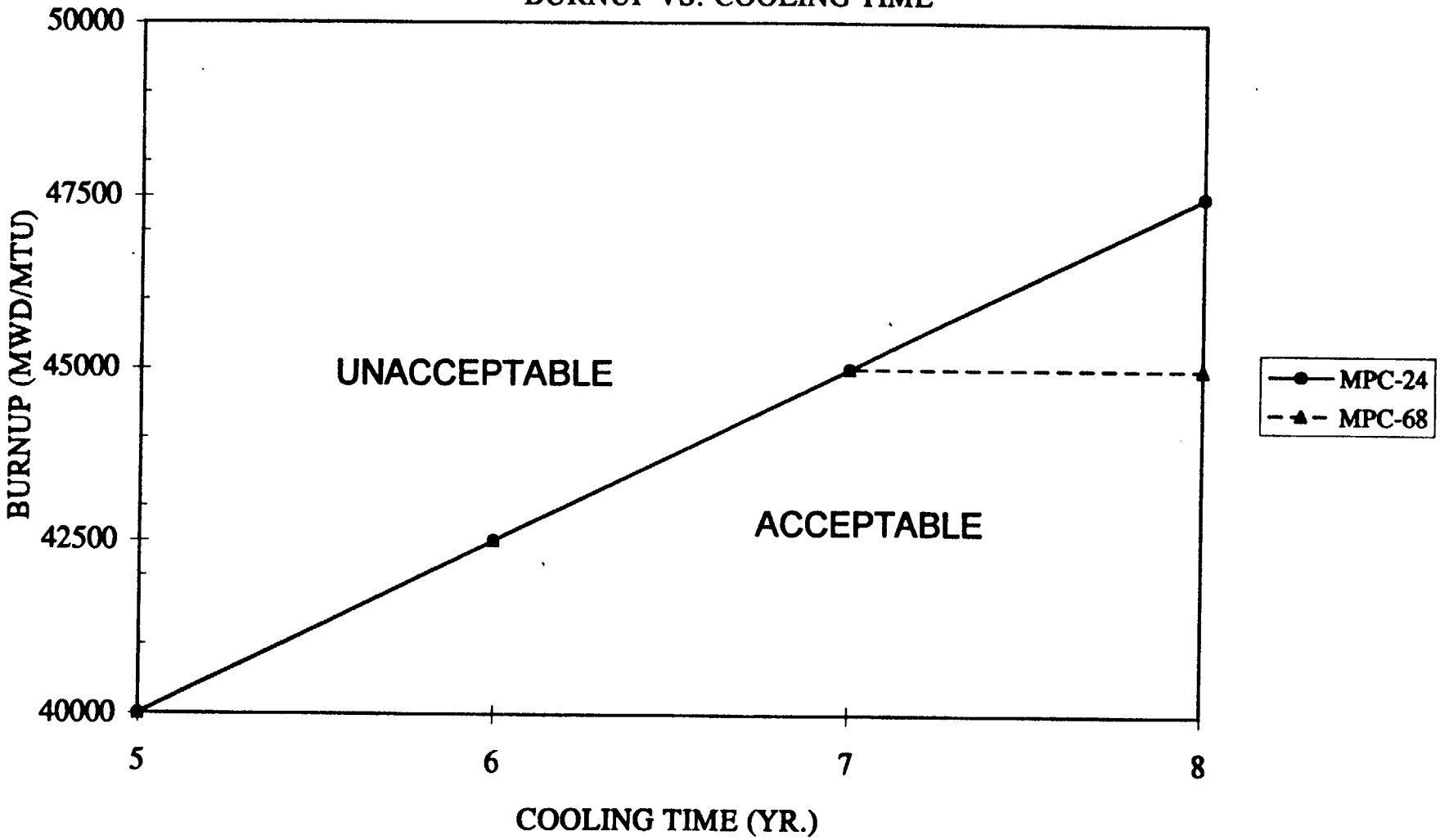

HI-STAR 100 STORAGE REQUIREMENTS

ACCEPTABLE BURNUP AND COOLING TIME FOR DECAY HEAT AND RADIATION SOURCE

BURNUP VS. COOLING TIME

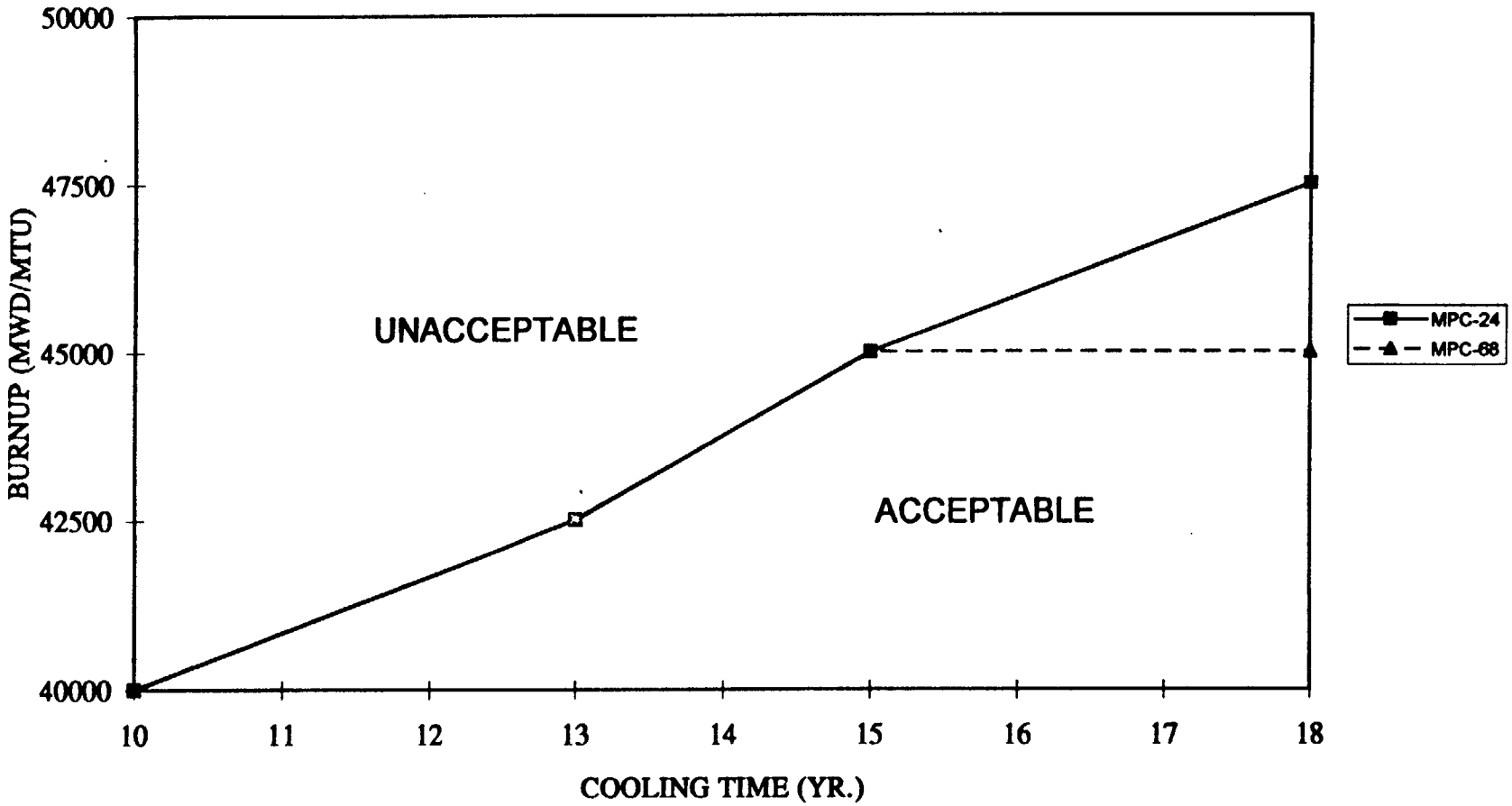

HI-STAR 100 TRANSPORTATION REQUIREMENTS

Methodology

- Shielding calculations were performed with the continuous energy, coupled neutron-gamma, three-dimensional Monte Carlo code MCNP-4A
- MCNP-4A is fully benchmarked in accordance with the Holtec QA Program

MCNP Model

- MPC baskets modeled explicitly
- The active fuel region was modeled as a homogenous region
- The end fittings were modeled as low density steel - shielding credit taken only for the activated steel
- BWR water channels were conservatively not modeled

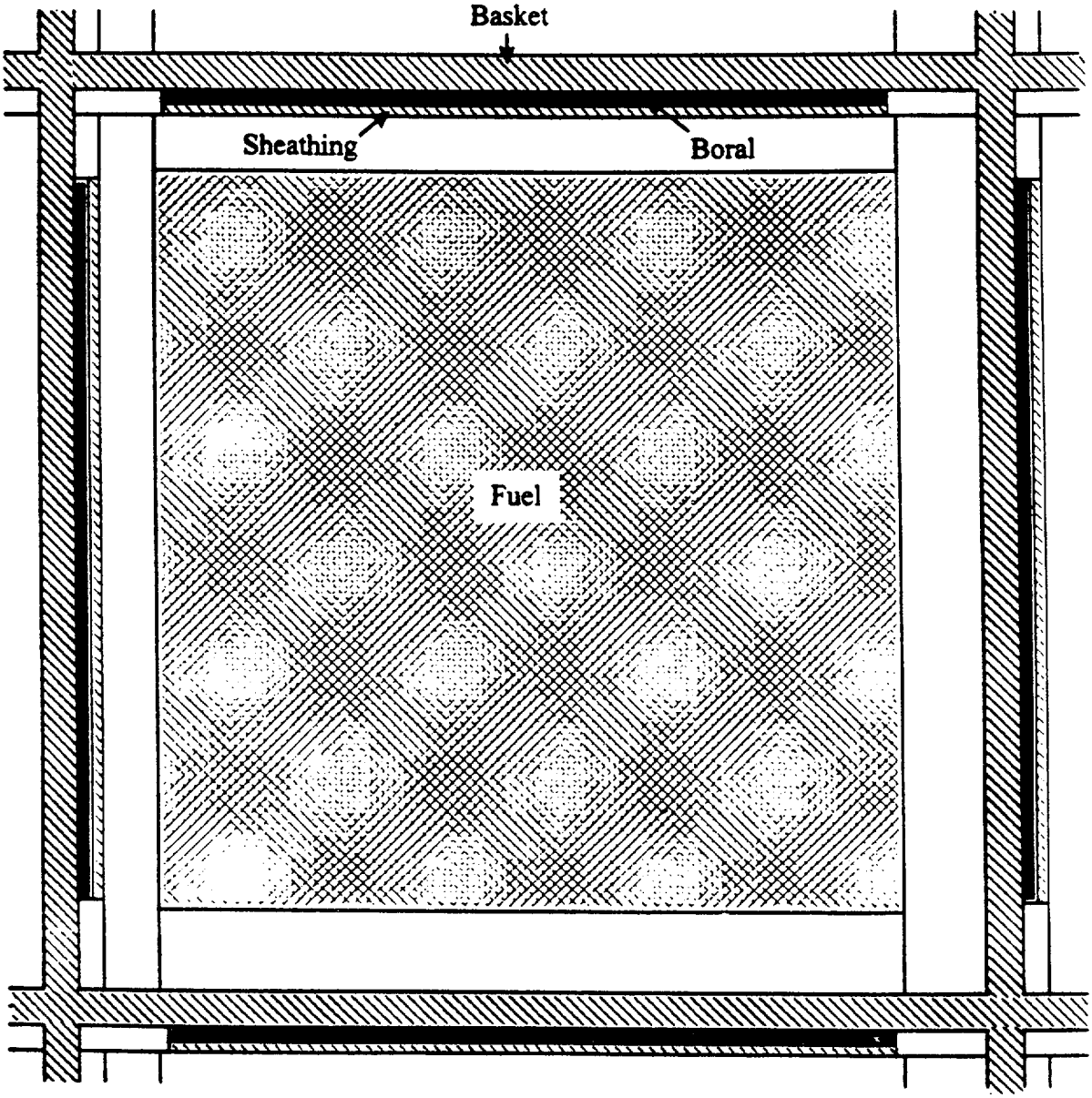

FIGURE 5.3.6; CROSS SECTIONAL VIEW OF AN MPC-68 BASKET CELL AS MODELED IN MCNP.†

† This figure Is drawn to scale using the MCNP plotter.

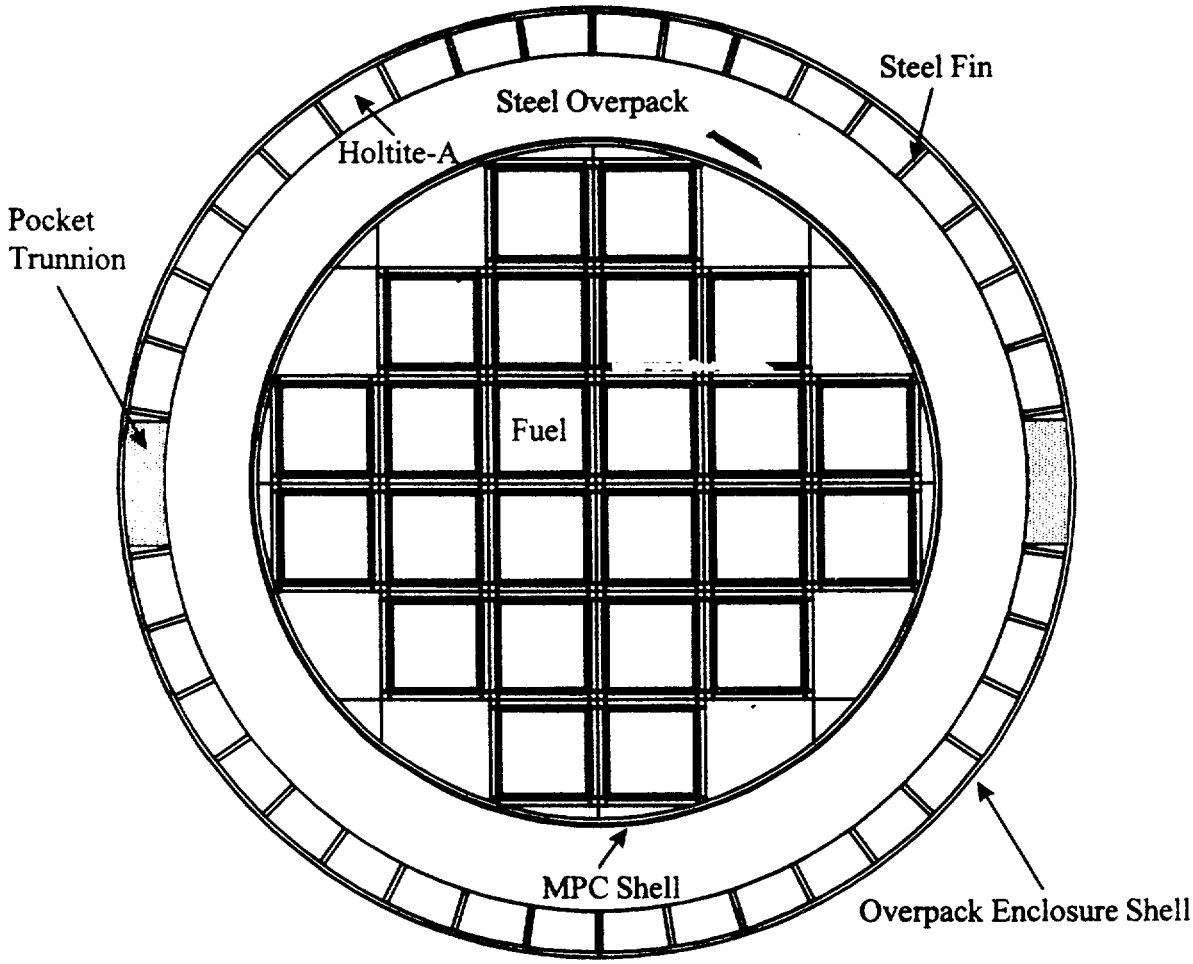
Steel Fin
Steel Overpack
Holtite-A
Pocket
Trunnion
Fuel
MPC Shell
Overpack Enclosure Shell

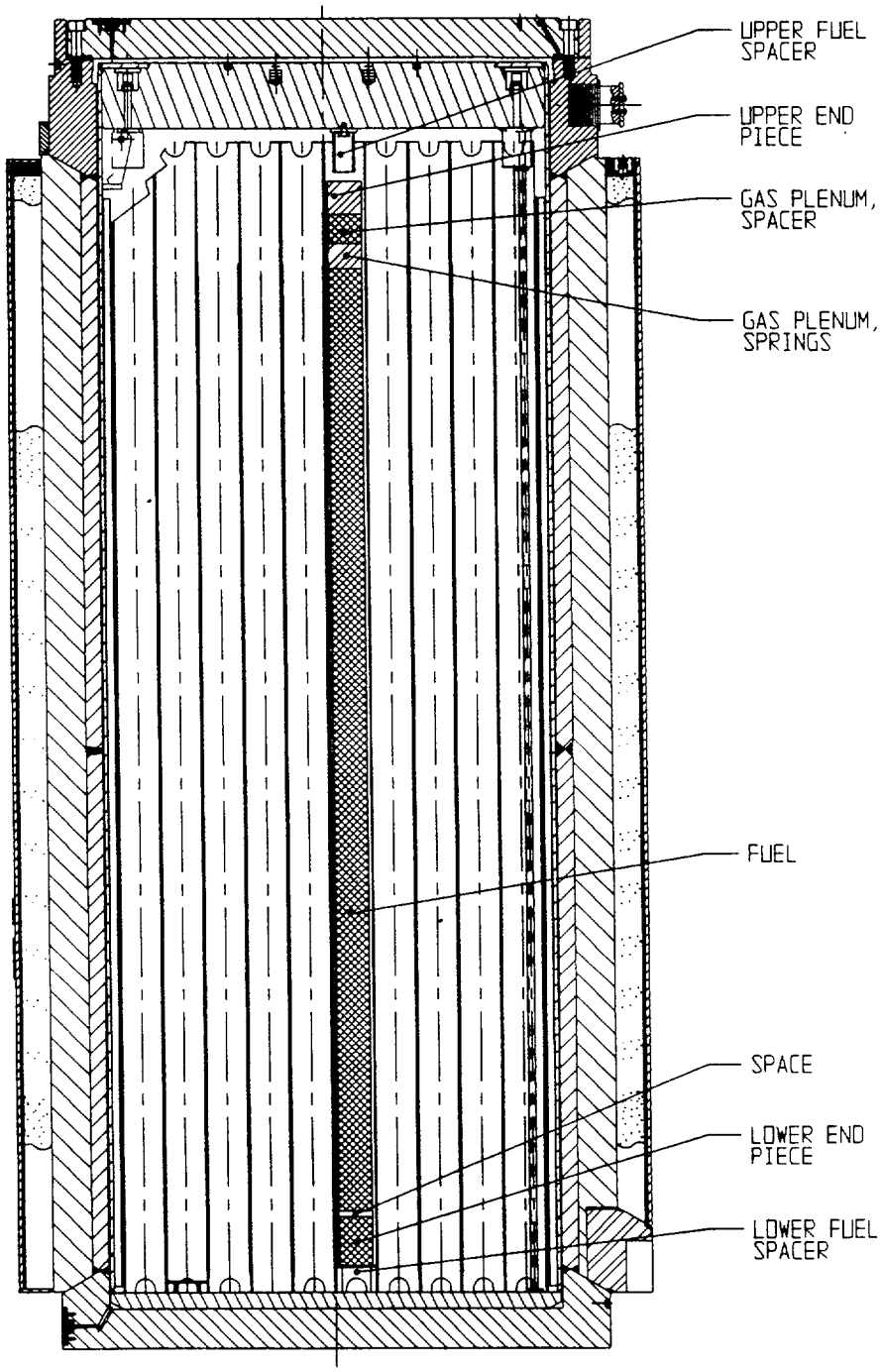

FIGURE 5.3.7; AXIAL LOCATION OF PWR DESIGN BASIS FUEL IN THE HI-STAR 100 SYSTEM

Shielding Analysis

- The MPC-24, -32 and -68 were analyzed separately for each burnup and decay time combination
- Full three-dimensional Monte Carlo analysis was performed for each MPC configuration

MCNP Calculations

Three separate MCNP calculations were performed for each burnup and decay time combination discussed

- Coupled neutron-gamma calculation using neutron source
- Gamma only calculation using the fuel decay gamma source
- Gamma only calculation using the Cobalt-60 activities in the end fittings

Dose Calculation
Transportation - Normal Condition

- Dose rates were calculated at the following locations
  - Contact of package (overpack and impact limiters)
  - 2 meters from transport vehicle -
- Credit was not taken for the personnel barrier
- No shielding credit taken for the aluminum in the impact limiters

Dose Calculation Transportation - Accident Condition

- Dose rates were calculated at a distance of 1 meter from the package
- The impact limiters are not present
- The neutron shield is assumed to be completely lost

Dose Calculation
Storage - Normal Condition

- Dose rates were calculated at the following locations
  - Surface of overpack
  - 1 meter from surface of overpack
- Annual doses were calculated at distances greater than 100 meters

Dose Calculation
Storage - Accident Condition

- Dose rates were calculated at the following locations
  - Surface of overpack
  - 1 meter from edge of overpack
- The neutron shield is assumed to be completely lost

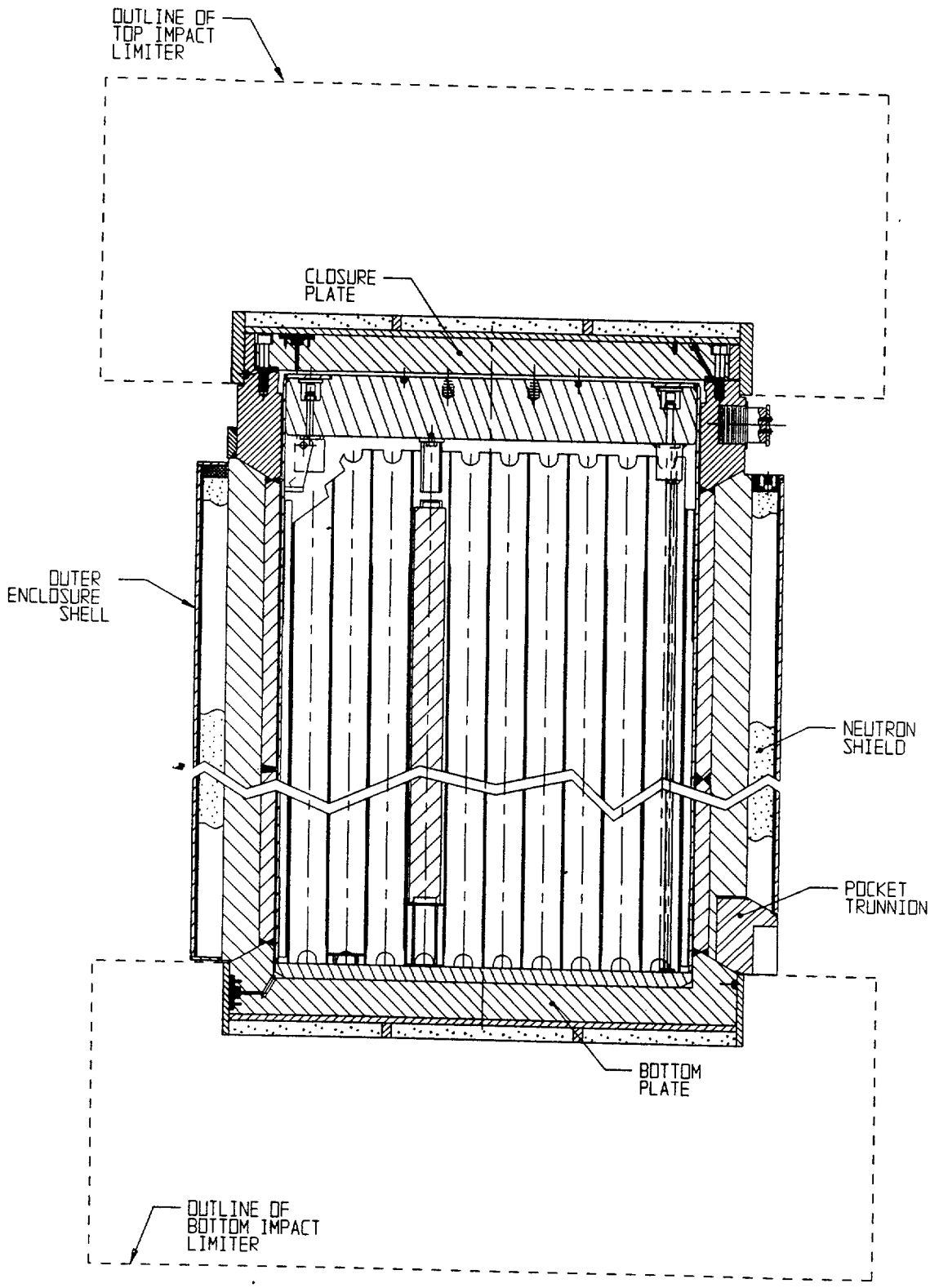

FIGURE 5.1.1; CROSS SECTION ELEVATION VIEW OF THE HI-STAR 100 SYSTEM DURING NORMAL CONDITIONS

Radiation Streaming Considerations

- The HI-STAR 100 has been re-engineered to eliminate streaming paths in the MPC lid and the overpack
- Explicit analysis was performed to determine the streaming through the radial fins and the pocket trunnions

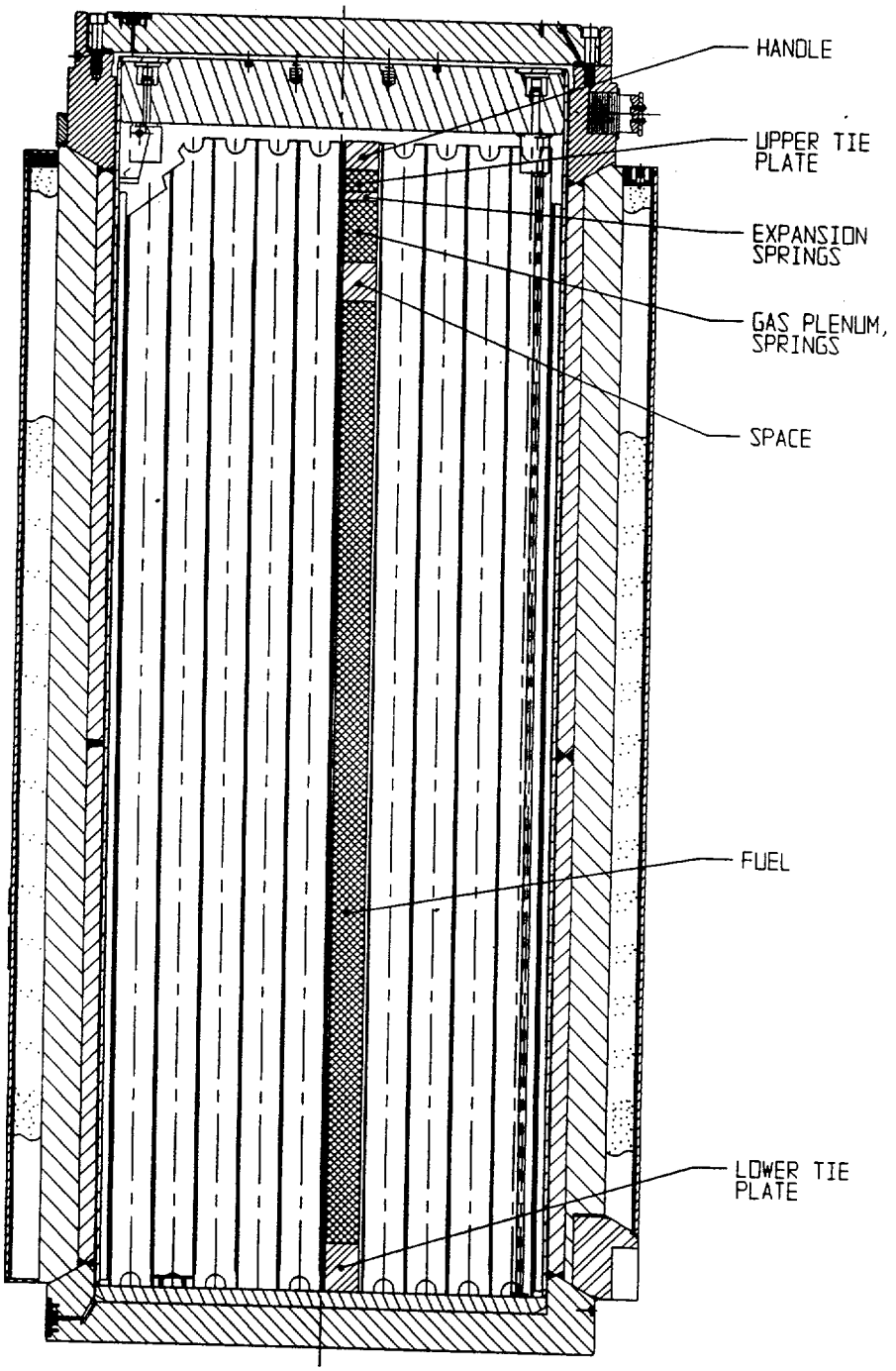

FIGURE 5.3.8; AXIAL LOCATION OF BWR DESIGN BASIS FUEL IN THE HI-STAR 100 SYSTEM

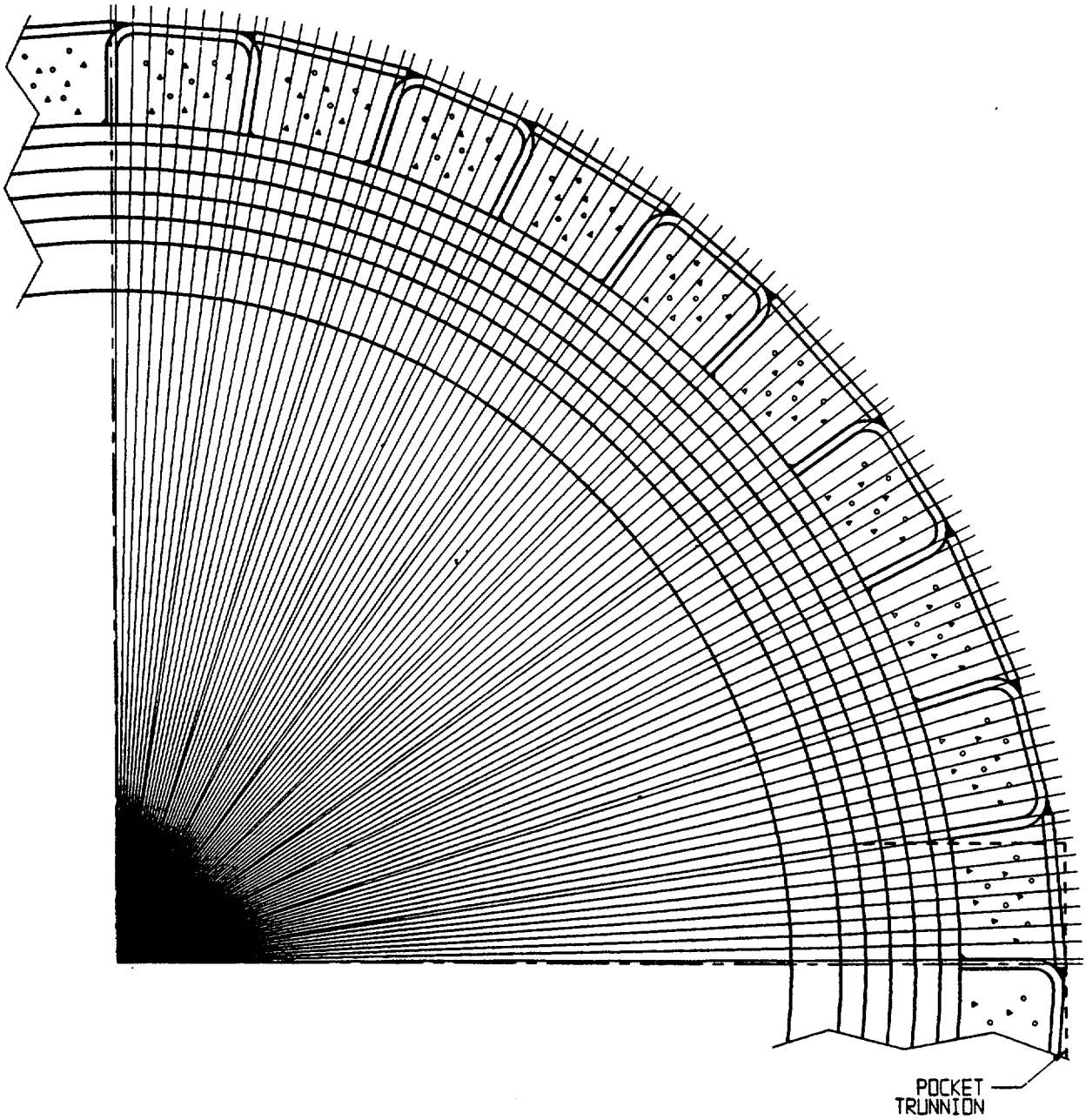

FIGURE 5.4.1; DEPICTION OF THE AZIMUTHAL SEGMENTATION OF THE OVERPACK USED IN ANALYZING NEUTRON AND PHOTON STREAMING

Site Boundary Dose Calculation

- Annual dose calculated with MCNP
- Single cask and various 2 by x arrays analyzed at distances greater than 100 meters
- Contribution to annual dose from the front and back rows were explicitly calculated
- Dose contribution from back row is approximately 25% of the total dose

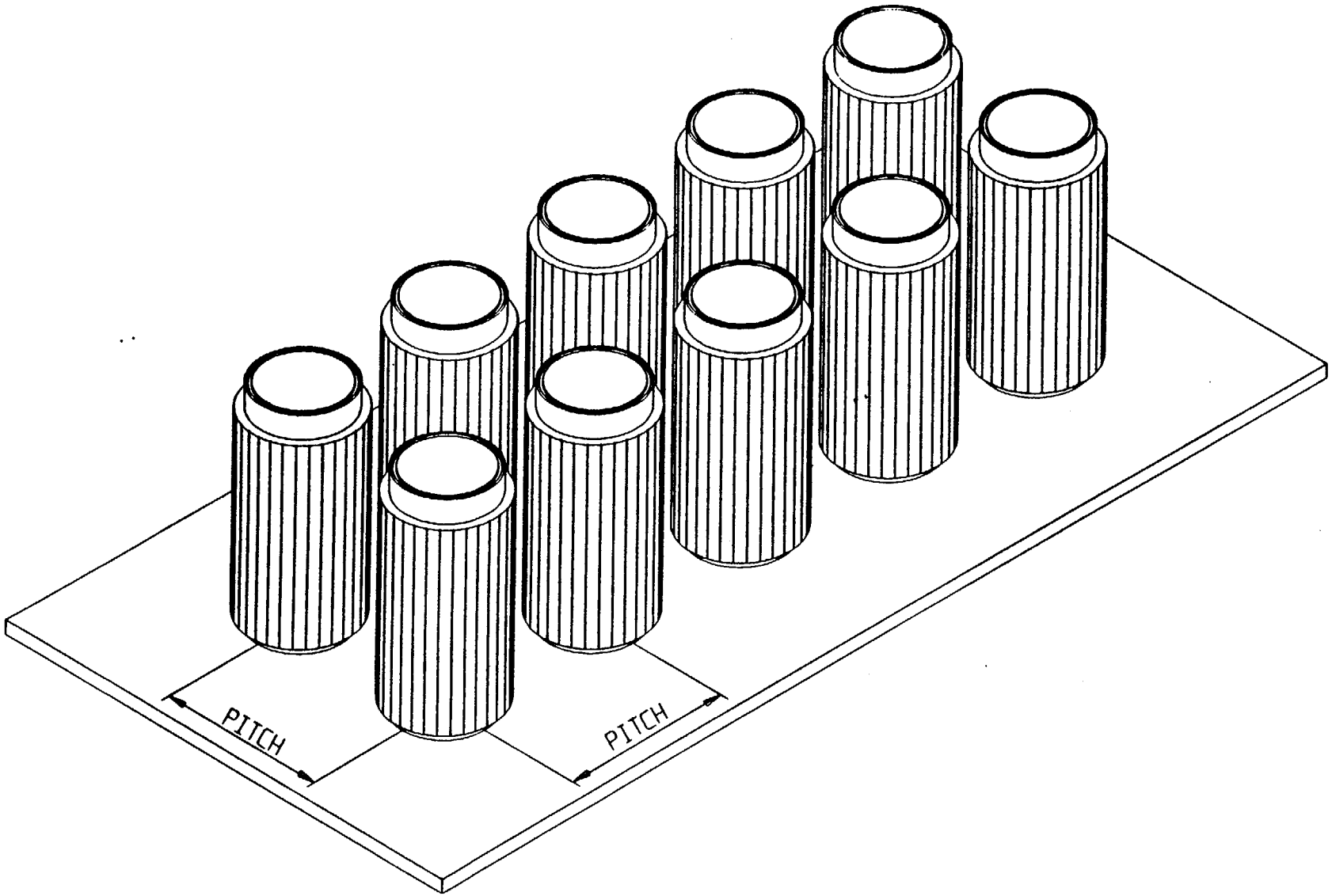

Figure 1.4.1; HI-STAR 100 TYPICAL ISFSI STORAGE PATTERN

Summary

- The radiation source terms have been calculated with SCALE 4.3
- The HI-STAR 100 design has been modified to provide additional shielding
- Additional analysis has been performed to address the questions in the RAIs

CRITICALITY SAFETY ANALYSIS

HI-STAR SYSTEM

For Transport (Part 71) and for Storage (Part 72)

HOLTEC INTERNATIONAL

ATTACHMENT 3

- Revised Method of Analysis to include

  MCNP *(Continuous Energy ENDF/B5)*

  Independent Verification with

  NITAWL2–KENO5a *(238 Group ENDF/B5–B6)*

- Analytical Models Conform to the Actual Cask Designs in All Important Aspects.

- Added "Evaluation of the Energy of the Average Lethargy of Fission" to MCNP for Consistency with KENO5a (As Requested by the USNRC)

- Combining Results of Different Codes (e.g., CASMO3 and MCNP or CASMO3 and KENO5a) Based on Procedures Requested by the USNRC

- Expanded Number of Critical Experiments Analyzed in Determining Bias, Including MOX

- Extensive Search for Trends – None found with MCNP or with 238-group KENO5a for
  - Enrichment,
  - Reflector Material or position,
  - Absorber Material or Loading,
  - Neutron Spectral Index,
  - Geometric Parameters, or
  - Pu Content of MOX Criticals

- Sample Computer Input Files provided for each Basket Design.
  Others will be provided if Requested

- Analyses Provided Documenting and Confirming that Using Average Enrichments is a Conservative Way to Characterize BWR Fuel Assemblies

- CASMO Used to Identify DIRECTION Caused by Manufacturing Tolerances. Positive-Reactivity Maximum Tolerances used for Reference MCNP or KENO5a Calculation

- Boron-10 Content of the Boral Absorber Very Conservatively assumed to be 90% of the Minimum as-Manufactured B-10 Content.
  Readily Confirmed in Cask Assembly

- Expanded Consideration of Damaged Fuel Criticality, including Postulated Accident Configurations and Altered Moderation

Table 6.3.1
CASMO3 CALCULATIONS FOR EFFECT OF TOLERANCES AND TEMPERATURE

Change in Nominal Parameter	Δk for Maximum Tolerance			Comment
	MPC-24	MPC-32	MPC-68	
Reduced Boral Width	+0.0003	+0.0005	-	Assume minimum Boral width
Increase in UO_2 Density	+0.0012	+0.0015	+0.0014	Assume 96% theoretical density
Reduced Box I.D.	negative	-	-	Assume maximum box I.D.
Increased Box I.D.	+0.0014	-.0012	-0.0030	Assume minimum lattice spacing
Decrease in Water Gap	+0.0058	-	-	Assume minimum water gap
Increase in Temperature				Assume 20° C
40° C	-0.0031	-0.0043	-0.0031	
70° C	-0.0093	-0.0117	-0.0136	
100° C	-0.0170	-0.0201	-0.0193	
10% Void in Moderator				
20° C	-0.0271	-0.0181	-0.0241	Assume no void.
100° C	-0.0269	-0.0189	-0.0239	
0.02 Increase in % Enrichment†	+0.0010	+0.0010	+0.0012	Add 0.0010 Δk to bias
Removal of Flow Channel (BWR)	-	-	-0.0073	Assume flow channel present

† Tolerance on enrichment is added to the bias correction in order that fuel specifications may refer to the nominal values of enrichment.

- Clearer Presentation and Identification of of the Most Reactive design Basis Fuel for Each Cask Basket Design

- Expanded Number of Fuel Assembly Designs Evaluated as Acceptable

- Enrichment Limits Identified and Evaluated for Several Classes of Fuel Types

Table 6.2.1
BWR Fuel Characteristics
(all dimensions in inches)

Fuel Assembly Type	Clad Material	Pitch	Number of Fuel Rods	Cladding O.D.	Cladding Thickness	Pellet Diameter	Active Fuel Length	Number of Water Rods	Water Rod O.D./I.D.	Flow Channel O.D./I.D.
6x6 GE Dresden 1	Zr-2	0.694	36	0.5645	0.035	0.494	110	0	0	4.41/4.29
6x6 Dresden MOX	Zr-2	0.694	36	0.5625	0.035	0.482	110	0	0	4.41/4.29
6x6 GE Humboldt	Zr-2	0.74	36	0.563	0.032	0.488	77.5	0	0	4.662/4.542
7x7 GE Humboldt	Zr-2	0.631	49	0.486	0.033	0.411	79	0	0	4.662/4.542
7x7 GE	Zr-2	0.738	49	0.563	0.037	0.477	144	0	0	5.494/5.291
8x8 GE Dresden 1	Zr-4	0.523	64	0.412	0.025	0.358	110	0	0	4.41/4.29
8x8 SPC	Zr-2	0.641	63	0.484	0.035	0.405	150	1	0.484/0.414	5.478/5.278
8x8 GE 8x8R	Zr-2	0.64	62	0.483	0.032	0.41	150	2	0.591/0.531	5.478/5.278
8x8 GE-10	Zr-2	0.64	60	0.483	0.032	0.41	150	4	1.340/1.260[T]	5.478/5.278
8x8 GE	Zr-2	0.64	63	0.493	0.034	0.416	150	1	0.493/0.425	5.478/5.278
9x9 SPC- 2 wtr rods	Zr-2	0.572	79	0.424	0.03	0.3565	150	2	0.425/0.364	5.478/5.278
9x9 SPC- 1wtr rod	Zr-2	0.572	80	0.423	0.0295	0.3565	150	1	0.512/0.472	5.478/5.278
9x9 GE-11	Zr-2	0.566	74	0.44	0.028	0.376	150	7	0.44/0.40	5.478/5.278
9x9 GE-11 Partial	Zr-2	0.566	66/74	0.44	0.028	0.376	150	1/2	0.44/0.40	5.478/5.278
9x9 Atrium 9B SPC	Zr-2	0.569	72	0.433	0.02614	0.3737	150	1	1.516/1.459	5.478/5.278
10x10 SVEA-96	Zr-2	0.488	96	0.379	0.0248	0.3224	150	5	0.493/0.425[TT]	5.993/5.478

[T] Water rod dimensions for the GE-10 is the actual dimensions, in lieu of equivalent water rods.

[TT] SVEA fuel assembly has one large square water rod in the center with four smaller rectangular water rods.

Table 6.2.1 (cont'd)
PWR Fuel Characteristics
(all dimensions in inches)

Fuel Assembly Type	Clad Material	Pitch	Number of Fuel Rods	Cladding O.D.	Cladding Thickness	Pellet Diameter	Active Fuel Length	Number of Water Rods	Water Rod O.D./I.D.
14x14 CE	Zr-4	0.58	176	0.44	0.026	0.3805	144	5	1.115/1.035
14x14 WE	Zr-4	0.556	179	0.422	0.0243	0.3659	144	17	0.539/0.505
14x14 WE OFA	Zr-4	0.556	179	0.4	0.0243	0.3444	144	17	0.527/0.493
15x15 B&W	Zr-4	0.568	208	0.43	0.0265	0.3686	144	17	0.53/0.498
15x15 CE	Zr-4	0.55	204	0.418	0.026	0.358	144	21	0.533/0.500[T]
15x15 SPC	Zr-4	0.563	204	0.424	0.03	0.357	144	21	0.544/0.493
15x15 WE	Zr-4	0.563	204	0.422	0.0245	0.366	144	21	0.546/0.512
15x15 WE OFA	Zr-4	0.563	204	0.422	0.0245	0.366	144	21	0.533/0.499
16x16 CE	Zr-4	0.506	236	0.382	0.025	0.325	144	5	0.98/0.90
17x17 SPC	Zr-4	0.496	264	0.36	0.025	0.303	144	25	0.480/0.448
17x17 WE STD	Zr-4	0.496	264	0.374	0.0225	0.3225	144	25	0.482/0.450
17x17 WE OFA	Zr-4	0.496	264	0.36	0.0225	0.3088	144	25	0.474/0.442
17x17 WE Vantage	Zr-4	0.496	264	0.374	0.0225	0.3225	144	25	0.496/0.422

[T] CE 15x15 fuel assembly has four large water rods with one smaller water rod in the center.

Table 6.2.2
CALCULATED REACTIVITIES OF FUEL ASSEMBLIES IN THE MPC-24

Fuel Type	MCNP Maximum k_{eff}
17x17 Rod Arrays at 4.0% Enrichment	
W OFA	0.9456[1]
W Standard	0.9388
W V5H	0.9371
SPC (ANF/Exxon/Siemens)	0.9434
B&W	0.9437
15x15 Rod Arrays at 4.1% Enrichment	
W OFA	0.9461[1]
W V5H or Standard	0.9425
SPC (ANF/Exxon/Siemens)	0.9342
B&W	0.9449
Palisades	0.9332
14x14 Rod Arrays at 4.6% Enrichment	
CE 14x14	0.9402[1]
W OFA	0.9393
W Standard	0.9315
16x16 Rod Arrays at 4.6% Enrichment	
CE16x16	0.9377

Note:

1. These calculations were made for a ^{10}B loading of 0.0198 g/cm^2 which is 90% of the minimum loading, 0.022 g/cm^2.

2. Maximum k_{eff} includes bias and calculational statistics.

Table 6.2.3

CALCULATED REACTIVITIES OF FUEL ASSEMBLIES IN THE MPC-32

	MCNP k_{eff} Calculation	
Fuel Type	**@ 1.9% Enrichment**	**@ 4.0% Enrichment***
15x15 B&W	0.9368††	0.9450
17x17 W Standard	0.9315	0.9415
17x17 W OFA	0.9317	0.9240
17x17 V5H	0.9299	0.9380
17x17 SPC	0.9211	0.9144
15x15 W OFA	0.9331	0.9407
15x15 W Standard or V5H	0.9339	0.9399
15x15 SPC	0.9230	0.9286
15x15 Palisades	0.9207	0.9195
14x14 CE	0.8905	0.8745
14x14 W Standard	0.8893	0.8732
14x14 W OFA	0.8837	0.8510
16x16 CE	0.9019	0.8950

Note:

1. These calculations were made for a ^{10}B loading of 0.0276 g/cm^2 which is 90% of the minimum loading, 0.0307 g/cm^2.

---

* Calculations at 4.0% enrichment assumed 1650 ppm soluble boron in the moderator.

†† KENO5a verification calculation gave a maximum k_{eff} of 0.9335, including bias.

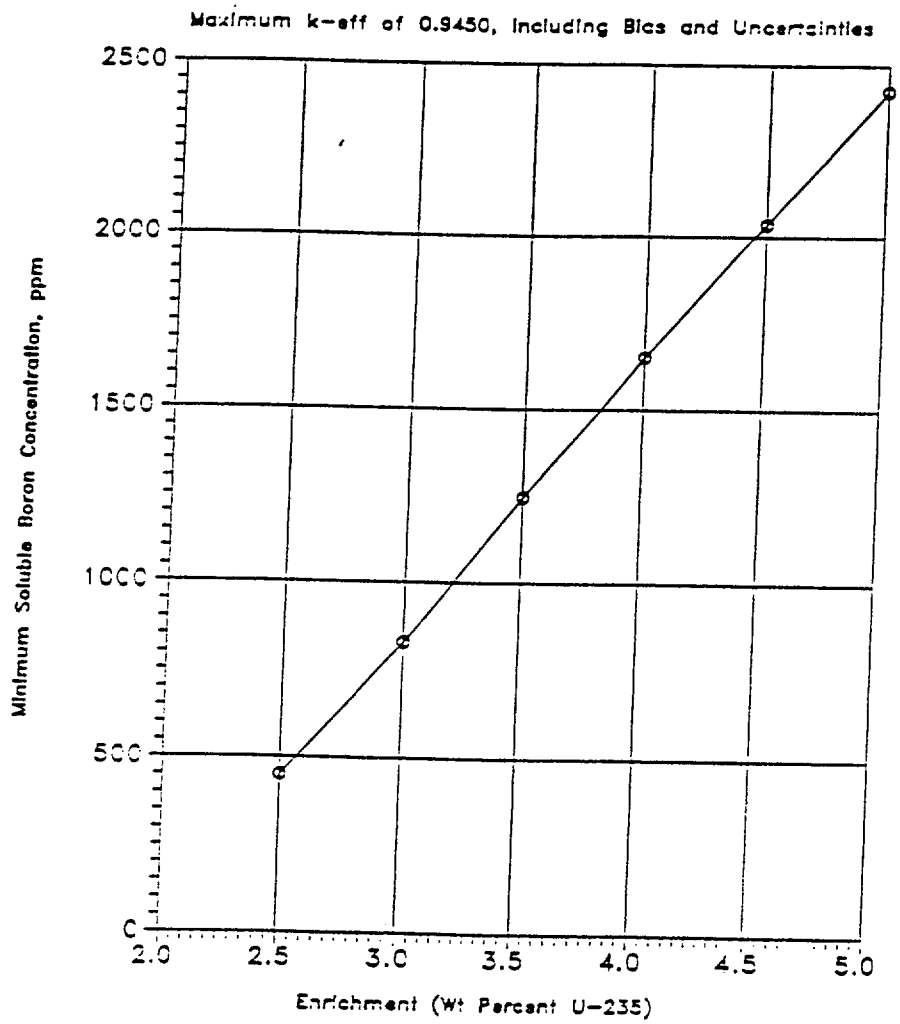

FIGURE 6.4.1; MINIMUM SOLUBLE BORON CONCENTRATION FOR LOADING OF FUEL IN THE MPC-32

Table 6.2.4

CALCULATED REACTIVITIES OF FUEL ASSEMBLIES
IN THE MPC-68

Fuel Description	Enrichment wt % ^{235}U	MCNP Maximum k_{eff}
GE8x8R w/2 water rods	4.2	0.9330[1]
GE8x8R w/0.080" channel	4.2	0.9304
GE8x8R, no channel	4.2	0.9255
GE 8x8, 1 water rod	4.2	0.9254
GE10, large diameter water rod	4.2	0.9311
SPC 8x8	4.2	0.9265
GE-11, 9x9	4.2	0.9329
GE-11, 9x9 w/short rods	4.2	0.9328
SPC 9x9, 1 water rod	4.2	0.9318
SPC 9x9, 2 water rods	4.2	0.9330
SPC 9x9, Atrium fuel	4.2	0.9299
SVEA, 10x10, 0.055" channel	4.2	0.9138

Notes:

1. See Tables 6.2.5 and 6.4.2 for calculated reactivities with Low Enrichment Dresden-1 and Humboldt Bay fuel.

2. These calculations were made for a ^{10}B loading of 0.0276 g/cm^2, which is 90% of the minimum loading, 0.0307 g/cm^2.

3. Channel thickness of 0.100 used for all other cases except as noted.

---

[1] KENO5a verification calculations gave a maximum k_{eff} of 0.9306, including bias.

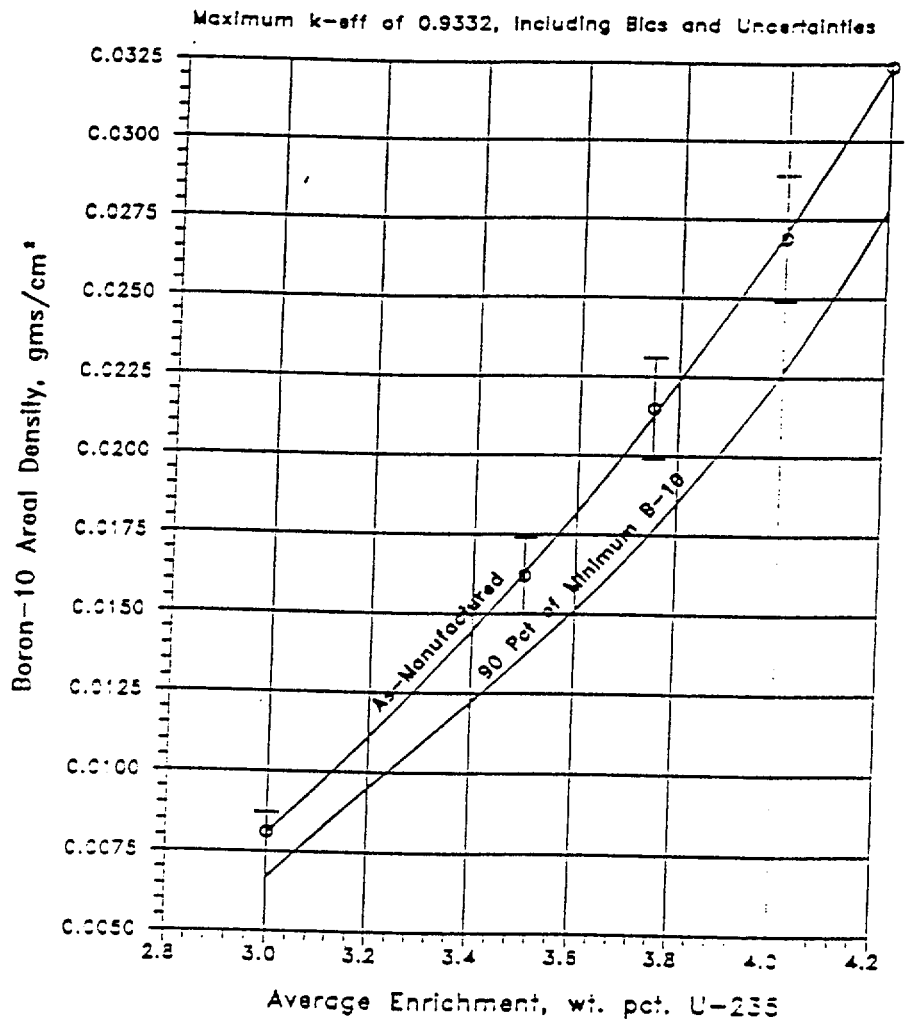

FIGURE 6.2.1 REQUIRED B-10 AREAL DENSITY FOR BWR FUEL OF VARIOUS AVERAGED ENRICHMENTS

HOLTEC
INTERNATIONAL

HI-STAR 100 SYSTEM

HI-STAR 100 System Characteristics

USNRC Meeting
February 10, 1997

K.P. Singh, Ph.D., P.E.
President - HOLTEC International

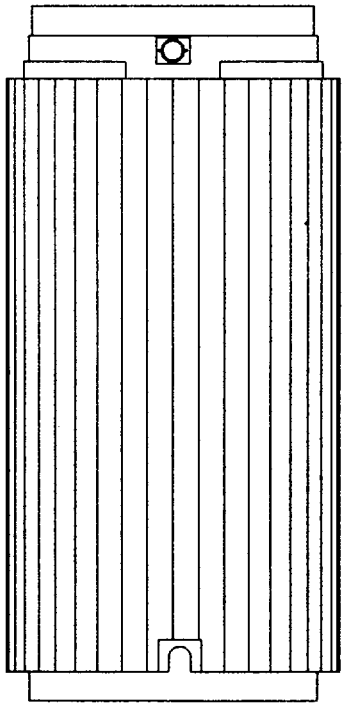

ATTACHMENT 4

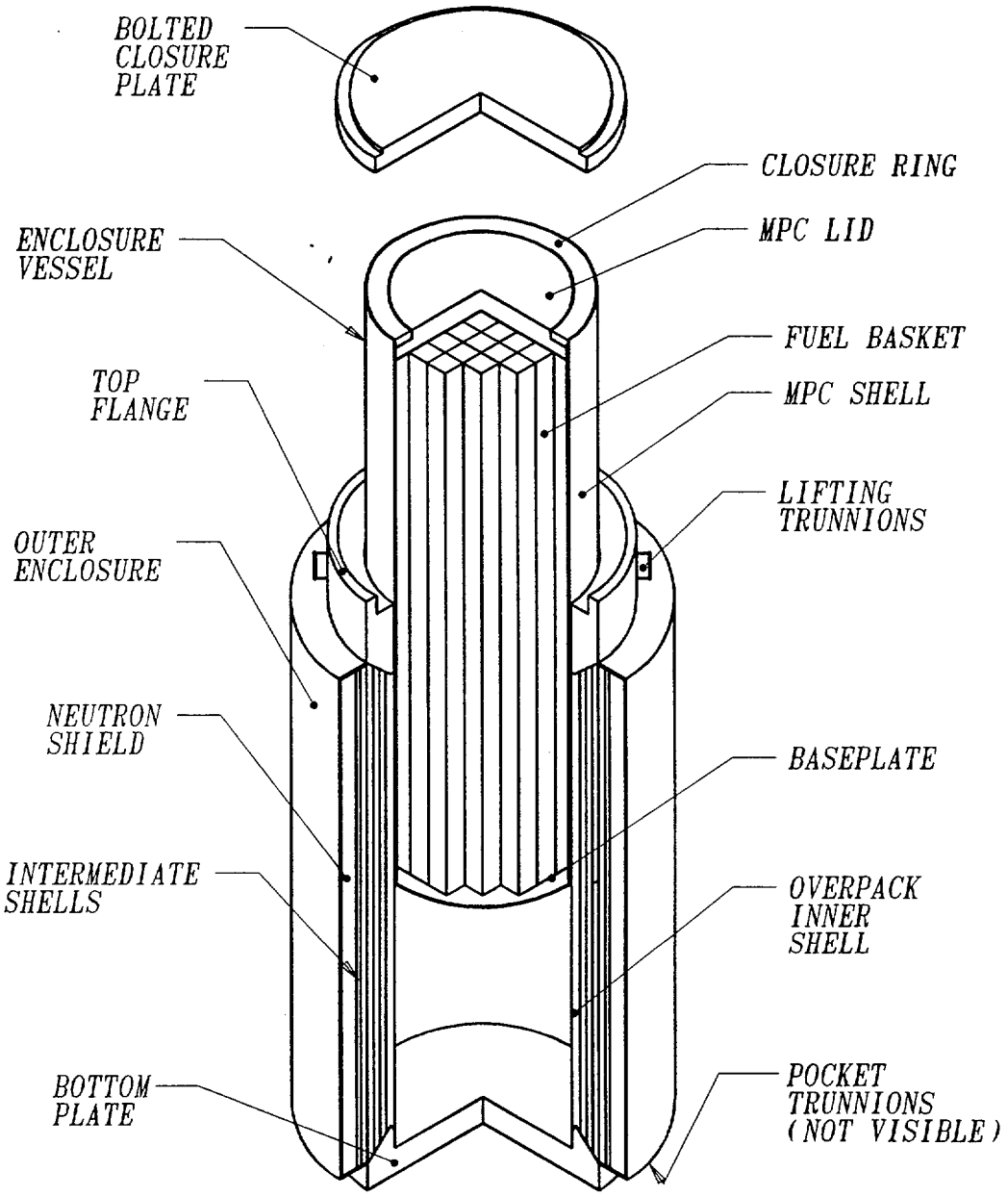

HI-STAR 100 OVERPACK
WITH MPC PARTIALLY INSERTED

HOLTEC
INTERNATIONAL

HI-STAR 100 System Thermal Design Basis

MPC TYPE	WATTS/ASSEMBLY	TOTAL DECAY HEAT
MPC-68	370.5	25.2 KW
MPC-24	1093	26.23 KW
MPC-32	774	24.77 KW

HOLTEC
INTERNATIONAL

Cask Design Objectives

- Maximum Heat Dissipation
- Maximum Structural Rigidity for Protection Against Accident Events
- Limits Maximum Lifted Weight to Less Than 125 Tons
- Maximum Gamma and Neutron Shielding
- Maximum Protection Against Extreme Events Such As Fire and Tornado Missile
- Maximum Fuel Assembly Capacity
- Compliance with DOE-MPC Specifications

COMPARISON OF KEY DESIGN FEATURES			
ITEM	**HI-STAR 100**	**LARGE TRANSPORT CASK LICENSED IN 1994 (DOCKET 71-9235)**	**ASSESSMENT**
BASKET CELL WALL THICKNESS	0.25" (MPC-68) 0.3125" (MPC-32) 0.3125" (MPC-24)	0.048"	THE THINNEST HI-STAR BASKET PANEL HAS 141 TIMES THE INERTIA SECTION
MINIMUM BORAL ^{10}B LOADING	UP TO 0.03 g/cm^2 (MPC-68) 0.0307 g/cm^2 (MPC-32) 0.022 g/cm^2 (MPC-24)	0.01 g/cm^2	HI-STAR BASKET ^{10}B LOADING IS 2.2 TO 3 TIMES GREATER
OVERPACK CONTAINMENT SHELL THICKNESS	2.5"	1.5"	HI-STAR CONTAINMENT IS 66.7% THICKER
OVERPACK BOTTOM PLATE THICKNESS	6"	6.2"	OVERPACK BOTTOM PLATE THICKNESS IS 97%
GAMMA SHIELDING	CARBON STEEL SHELLS	STEEL AND LEAD	LEAD IS ELIMINATED FROM HI-STAR
SLUMP OF GAMMA SHIELD IN FIRE EVENT	NOT CREDIBLE	YES (POSSIBLE)	LEAD SLUMP NOT AN ISSUE WITH HI-STAR
IMPACT LIMITER	ALL METAL	REDWOOD AND BALSA WOOD	METAL NOT SUSCEPTIBLE TO LONG-TERM DEGRADATION

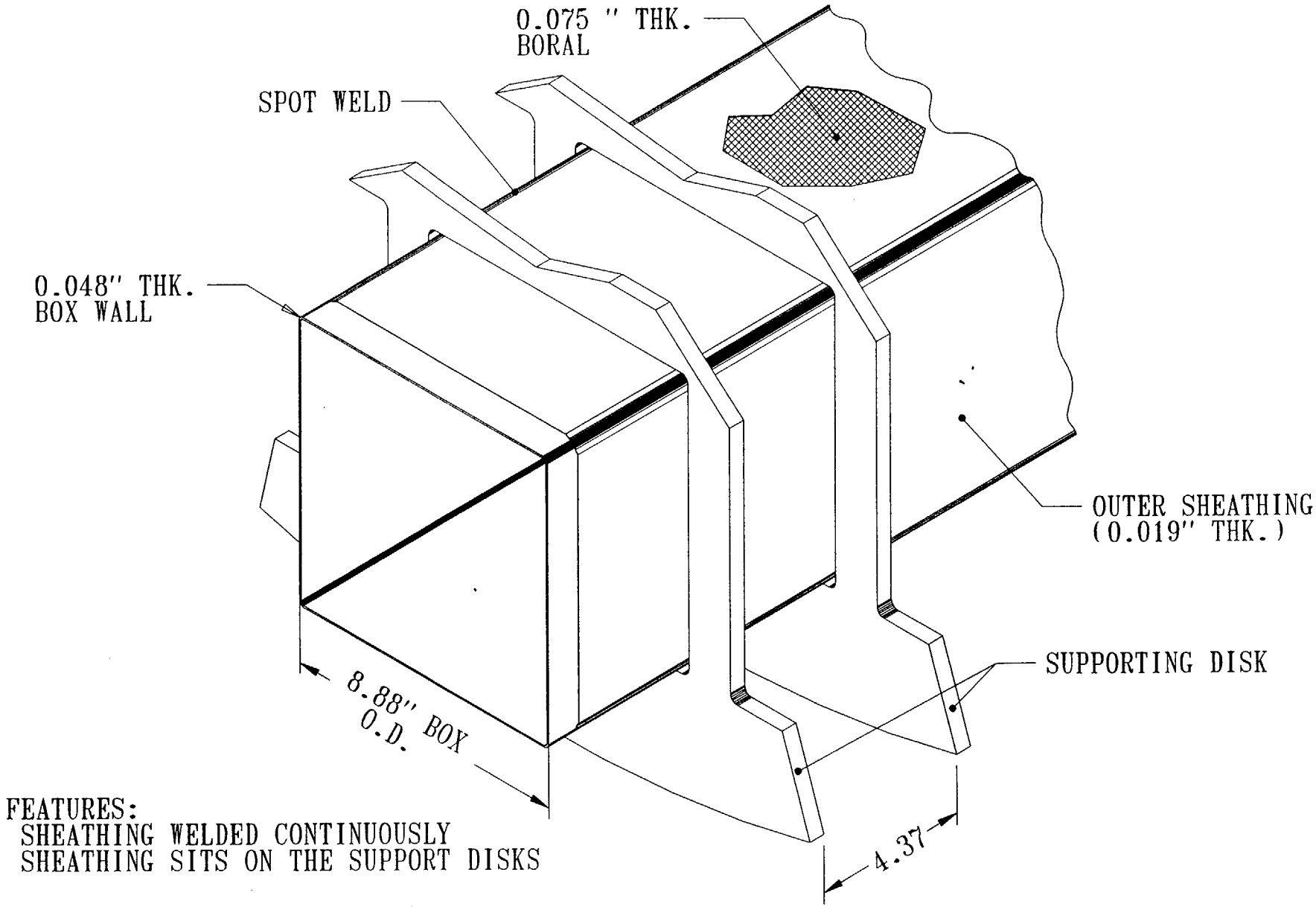

FEATURES:
SHEATHING WELDED CONTINUOUSLY
SHEATHING SITS ON THE SUPPORT DISKS

COMPOSITE BOX ELEMENT

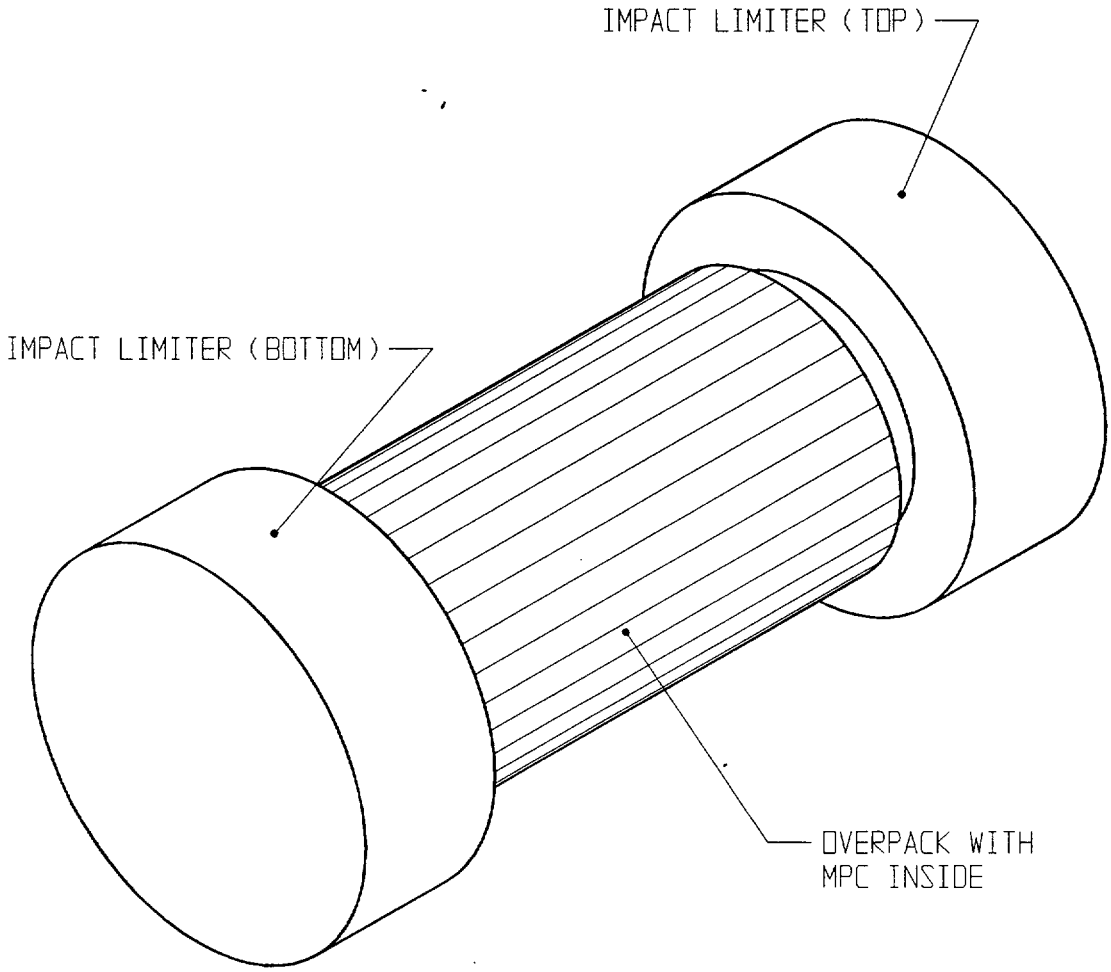

HI-STAR 100 WITH IMPACT LIMITER

HOLTEC
INTERNATIONAL

Major Features

- All-Welded Multi-Purpose Canister
- Enclosure Vessel Designed to ASME Section III Class 1
- Fuel Basket Designed to ASME Section III Subsection NG
- All-Metallic (Aluminum) Impact Limiters
- Three MPC Designs Submitted for Certification
- MPC Has No Carbon Steel (All Alloy Construction)
- Minimizes Field Welding

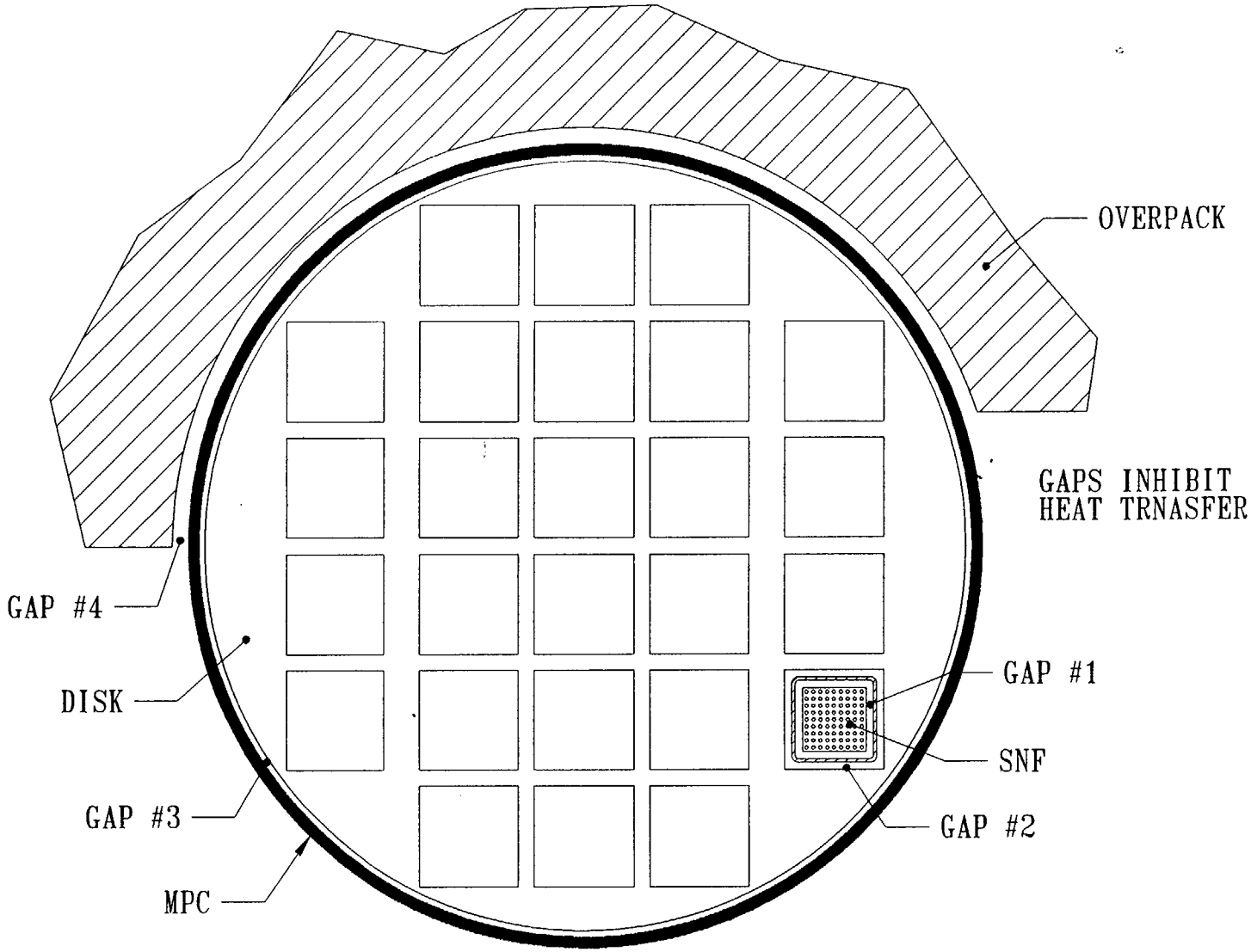

LOCATION OF MULTIPLE GAPS IN THE CLASSICAL DESIGN

LEGEND
GAP #1: SNF TO BOX GAP
GAP #2: BOX WALL TO DISK GAP
GAP #3: DISK TO MPC GAP
GAP #4: MPC TO OVERPACK GAP

HOLTEC
INTERNATIONAL

Maximum Fuel Cladding Temperatures
(Normal Conditions)*

MPC TYPE	MAXIMUM FUEL CLADDING TEMPERATURE
MPC-68	651 °F
MPC-24	657 °F
MPC-32	697 °F

* Ambient Temperature: 100°F

HOLTEC
INTERNATIONAL

Thermal Design Basis for Transport*

ITEM	MPC-32	MPC-24	MPC-68
TOTAL DECAY HEAT LOAD	18.14 KW	16.78 KW	16.56 KW
MAXIMUM PERMISSIBLE PEAK CLADDING TEMPERATURE			
- NORMAL CONDITIONS	716 °F	716 °F	716 °F
- ACCIDENT CONDITIONS	1058 °F	1058 °F	1058 °F
AMBIENT TEMPERATURE	100 °F	100 °F	100 °F

* From Table 1.2.3 of HI-951251, SARP

HOLTEC
INTERNATIONAL

HI-STAR 100 SYSTEM

Confinement and Containment

USNRC Meeting
February 10, 1997

Stephen Agace
Manager of Operations

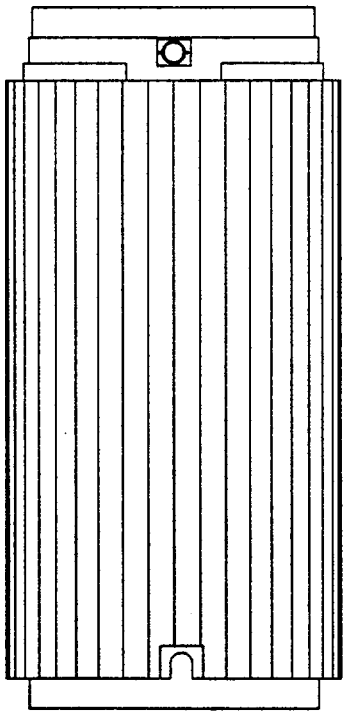

ATTACHMENT 5

HOLTEC INTERNATIONAL

Presentation Outline

- **HI-STAR 100 Confinement System**
  - Design Specifications
  - Confinement Boundary Welds
  - Weld Testing and Examination
  - Applicable Codes for NDE
  - Normal Conditions of Storage
  - Confinement Analysis for Storage Accident Conditions
  - Results of Storage Accident Conditions
- **HI-STAR 100 Containment System**
  - Design Specifications
  - Closure Bolting
  - Weld Testing and Examination
  - Seal Testing
  - Normal and Accident Conditions of Transport
  - Containment Criterion for Transport Conditions
- **Conclusions**

HOLTEC
INTERNATIONAL

HI-STAR 100 Confinement System

Multi-Purpose Canister

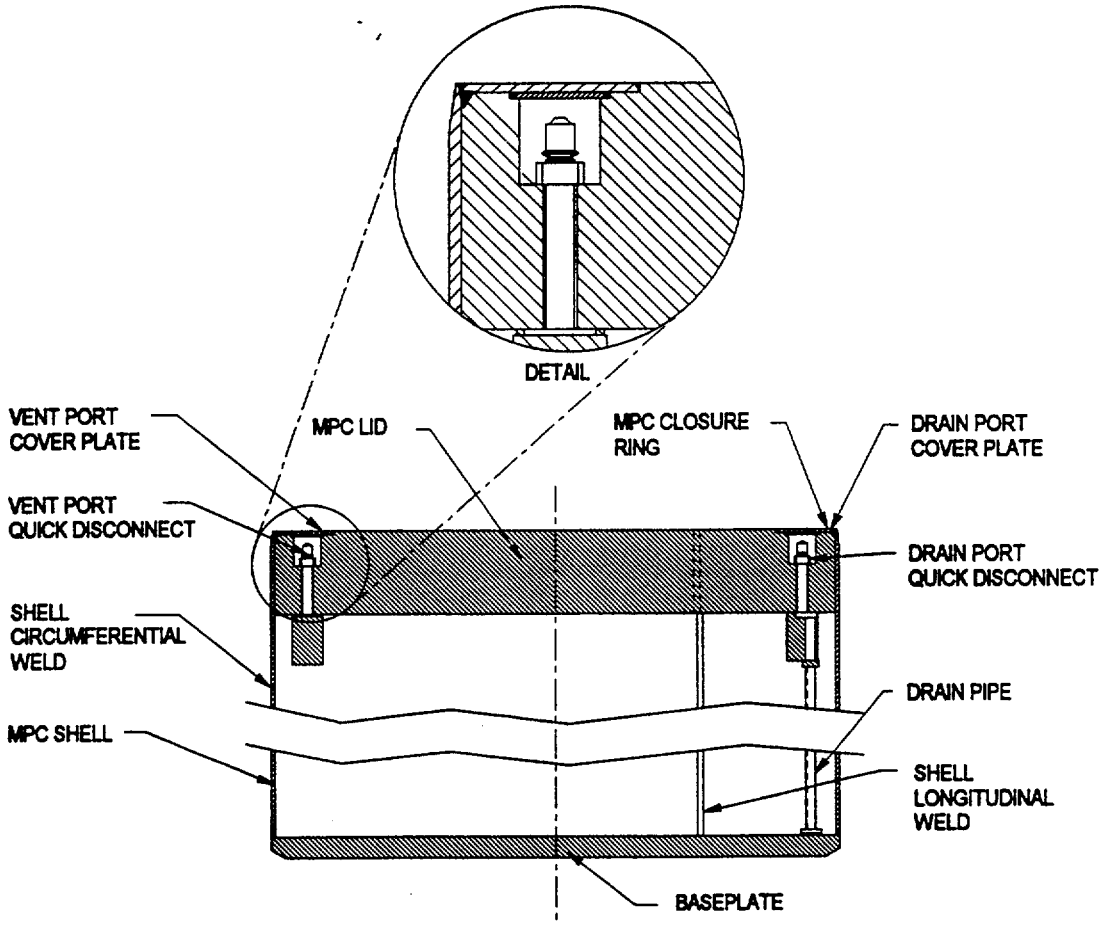

HOLTEC INTERNATIONAL

Summary of Confinement Boundary Design Specifications

Design Attribute	Design Rating
Design Temperature (normal)	550 °F (MPC lid)
Internal Design Pressure (off-normal)	100 psig
Design Temperature (off-normal)	550 °F (MPC lid)
Internal Design Pressure (accident)	125 psig
Design Temperature (accident)	950 °F
Design Basis Leakage Rate	1×10^{-4} cm^3/sec (helium)
Closure Plate Mechanical Seals: Design Temperature Pressure Rating	 1200 °F 10,000 psig
Overpack Vent and Drain Port Cover Plate Mechanical Seals: Design Temperature Pressure Rating	 464 °F 10,000 psig
Overpack Vent and Drain Port Plug Mechanical Seals: Design Temperature Pressure Rating	 1600 °F 15,000 psig
Design Basis Helium Leakage Rate	1.51×10^{-4} cm^3/s
Helium Leakage Rate Test Acceptance Criterion	$\leq 2.4 \times 10^{-5}$ cm^3/s
Helium Leakage Rate Test Sensitivity	1.2×10^{-5} cm^3/s

HOLTEC
INTERNATIONAL

MPC Confinement Boundary Welds

Confinement Boundary Welds		
MPC Weld Location	Weld Type	ASME Code Category (Section III, Subsection NB)
Shell longitudinal seam	Full Penetration Groove (shop weld)	A
Shell circumferential seam	Full Penetration Groove (shop weld)	B
Baseplate to shell	Full Penetration Groove (shop weld)	C
MPC lid to shell	Partial Penetration Groove (field weld)	C
Closure ring to shell	Full Penetration Groove (field weld)	C
Vent and drain port cover plates to MPC lid	Full Penetration Groove (field weld)	No Category
Closure ring to closure ring radial	Full Penetration Groove (field weld)	No Category
Closure ring to MPC lid	Full Penetration Groove (field weld)	D

HOLTEC
INTERNATIONAL

MPC Weld Testing and Examination

Weld Location	NDE Requirement	Leakage Test
Shell longitudinal seam	RT, PT Surface	Helium MSLD (Fabrication)
Shell circumferential seam	RT, PT Surface	Helium MSLD (Fabrication)
Baseplate-to-shell	RT or UT, PT Surface	Helium MSLD (Fabrication)
Lid-to-shell	PT (root and final pass)	Helium MSLD (Closure)
Closure ring-to-shell	PT (root and final pass)	Helium MSLD (Closure)
Closure ring-to-shell	PT (root and final pass)	Helium MSLD (Closure)
Closure ring-to-lid	PT (root and final pass)	Helium MSLD (Closure)
Closure ring radial welds	PT (root and final pass)	Helium MSLD (Closure)
Port cover plates-to-lid	PT (root and final pass)	Pressure rise

HOLTEC INTERNATIONAL

Applicable Codes for MPC Non-Destructive Examinations

NDE Test Type	Applicable Code	Acceptance Criteria (Applicable Code
RT	ASME Section V, Article 2	ASME Section III, Subsection NB, Article NB-5320
UT	ASME Section V, Article 5	ASME Section III, Subsection NB, Article NB-5330
PT	ASME Section V, Article 6	ASME Section III, Subsection NB, Article NB-5350

HOLTEC INTERNATIONAL

Normal Conditions of Storage

- **No Confinement Credit Taken for Overpack Pressure Vessel**
- **MPC Stress Limits Are Within Their Code-Allowable Limits**
- **MPC Temperatures Are Within Design-Basis Limits**
- **MPC Pressure Is Within Design-Basis Limit**
- **No Coatings Used**
  - All alloy construction
  - Boral plates are completely enclosed
- **MPC Pressure Below Design Basis (Normal) for the Most Adverse Conditions**
  - Maximum normal ambient temperature
  - Full insolation
  - Decay heat load
  - 10% fuel cladding rupture

HOLTEC
INTERNATIONAL

Confinement Analysis for Storage Accident Conditions

- **Assumes a Full Release of Available MPC Contents**
- **Nuclides Quantities Based on Bounding ORIGEN-S Calculations**
  - B&W 15x15, 45,000 MWD/MTU, 5-yr cooled
  - GE 8x8R, 45,000 MWD/MTU, 5-yr cooled
- **Based on Nuclides and Release Fractions of NUREG-1536 (draft)**
- **^{60}Co Source Based on 140 Micro-Ci/cm^2**

HOLTEC
INTERNATIONAL

Results of Storage Accident Conditions
(at 200 meters)

Component	MPC-24 (Rem)	MPC-32 (Rem)	MPC-68 (Rem)
Whole Body Dose	0.556	0.741	0.565
Thyroid	1.467	1.955	1.504
Regulatory Limit	5	5	5

HOLTEC
INTERNATIONAL

HI-STAR 100 OVERPACK CONTAINMENT BOUNDARY COMPONENTS

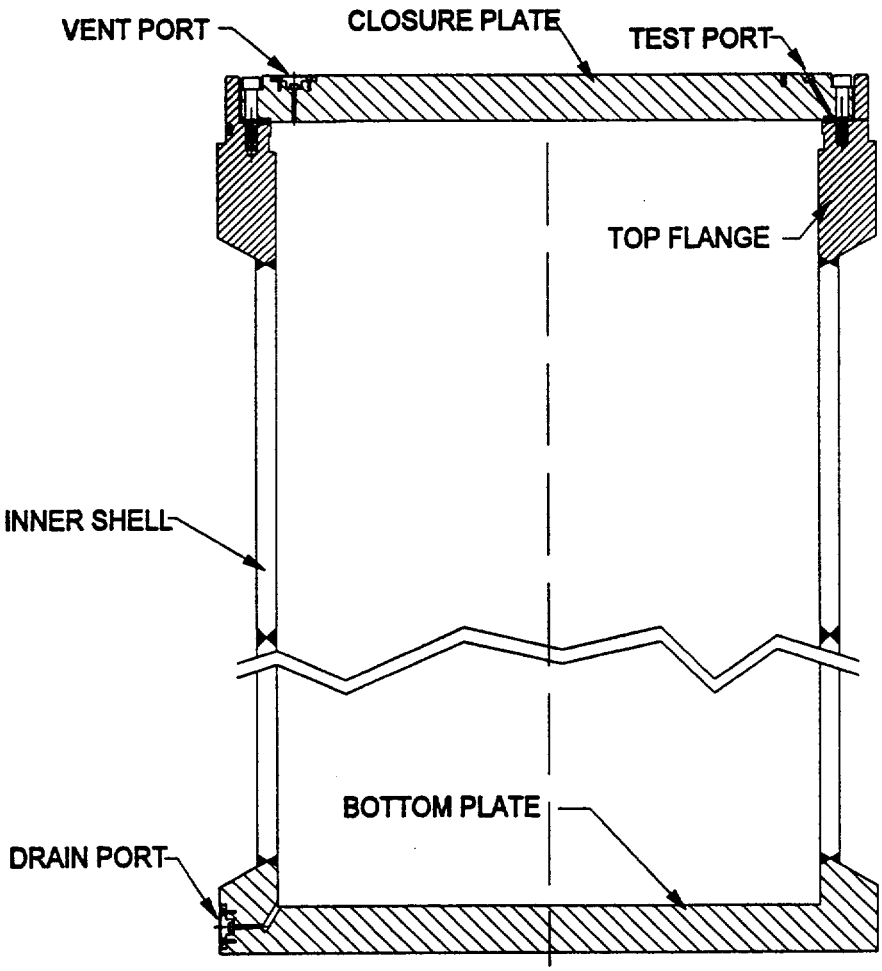

HOLTEC
INTERNATIONAL

HI-STAR 100 Closure Plate Containment Details

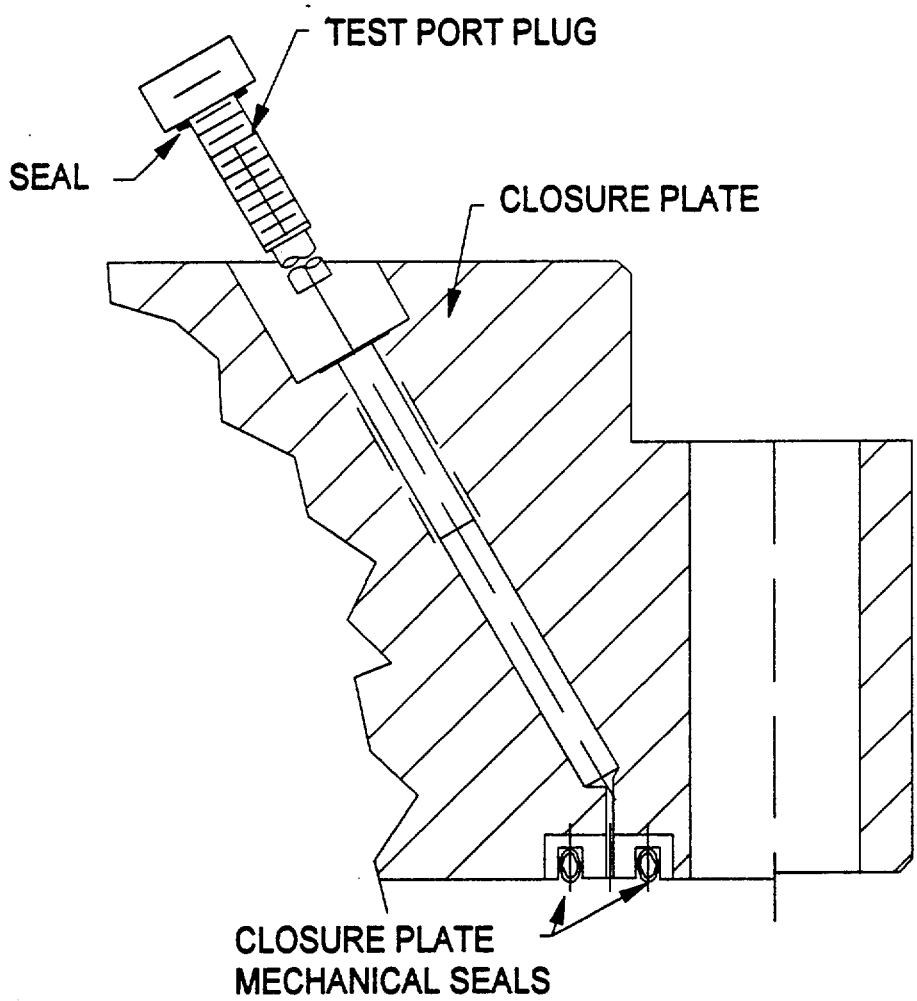

HOLTEC
INTERNATIONAL

HI-STAR 100 Overpack Vent and Drain Port Details

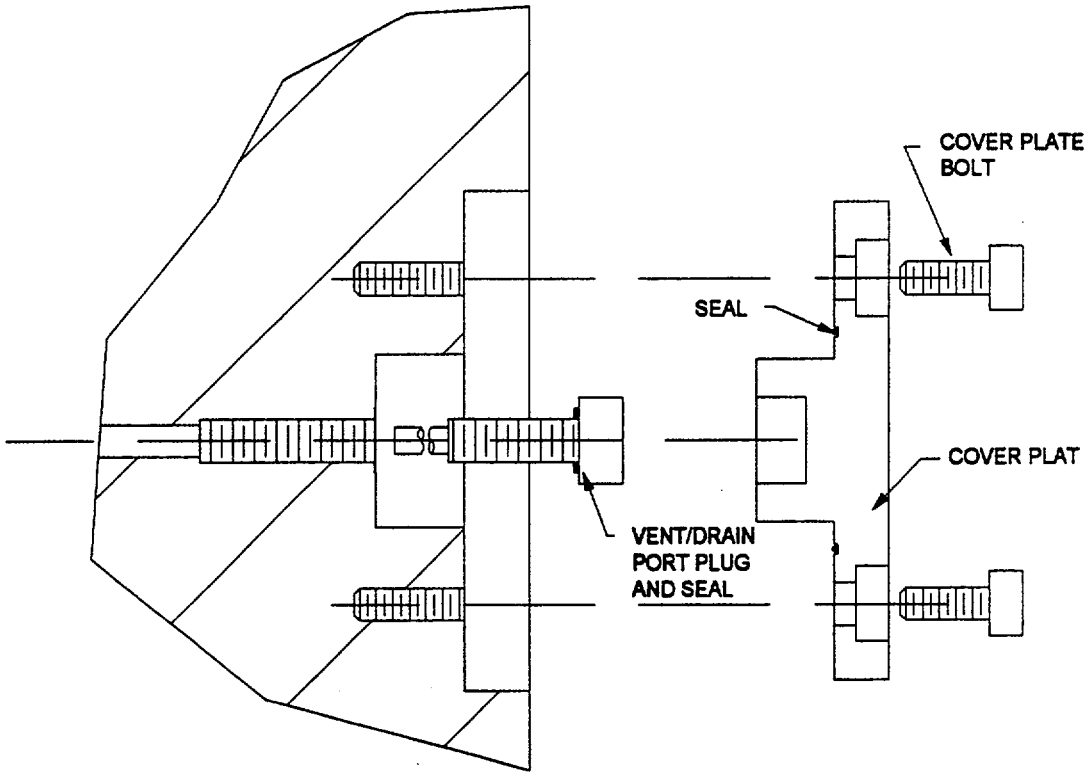

HOLTEC
INTERNATIONAL

Summary of Containment Boundary Design Specifications

Design Attribute	Design Rating
Overpack Internal Design Pressure (normal)	100 psig
Average Gas Temperature (normal)	507 °F
Overpack Internal Design Pressure (accident)	125 psig
Average Gas Temperature (accident)	568 °F
Closure Plate Mechanical Seals: Design Temperature Pressure Rating Design Leakage Rate	 1200 °F 10,000 psig $<1x10^{-6}$ cm^3/s, He
Overpack Vent and Drain Port Cover Plate Mechanical Seals: Design Temperature Pressure Rating Design Leakage Rate	 464 °F 10,000 psig $<1x10^{-6}$ cm^3/s, He
Overpack Vent and Drain Port Plug Mechanical Seals: Design Temperature Pressure Rating Design Leakage Rate	 1600 °F 15,000 psig $<1x10^{-6}$ cm^3/s, He
Design Basis Helium Leakage Rate	$1.51x10^{-4}$ cm^3/s
Helium Leakage Rate Test Acceptance Criterion	$\leq 2.4x10^{-5}$ cm^3/s
Helium Leakage Rate Test Sensitivity	$1.2x10^{-5}$ cm^3/s

HOLTEC
INTERNATIONAL

HI-STAR 100 Containment Closure Bolting Summary

Item	Qty	Type	Material
Closure Plate Bolt (Long)	52	1-1/2"-6 UNC x 7-3/8" LG Socket Cap Screw	SB-637-N07718
Closure Plate Bolt (Short)	2	1-1/2"-6 UNC x 6-15/16" LG Socket Cap Screw	SB-637-N07718
Vent/Drain Port Cover Plate Bolt	4 ea	3/8"-16 UNC x 1-1/4" LG Socket Cap Screw	SA-193 Grade B7
Vent/Drain/Closure Plate Port Plug	1 ea	7/8" diameter Fabricated Plug	SA-193 Grade B8

HOLTEC
INTERNATIONAL

Overpack Weld Testing and Examination

Overpack Weld Location	NDE Requirement	Leakage Test
Inner shell-to-top flange	RT, MT or PT Surface	Helium MSLD (Fabrication)
Inner shell -to-bottom plate	RT, MT or PT Surface	Helium MSLD (Fabrication)
Inner shell longitudinal seam	RT, MT or PT Surfac,e	Helium MSLD (Fabrication)
Inner shell circumferential seam	RT, MT or PT Surface	Helium MSLD (Fabrication)

HOLTEC
INTERNATIONAL

Overpack Seal Testing

- **Full Fabrication Assembly Leakage Test**
  - Evacuated envelop method
  - Tested in accordance with ANSI N14.5
  - Acceptance criteria based on transport limits
- **All Penetrations Have Double Seals**
- **Assembly Verification Leak Test (Following Loading)**
  - Evacuated envelop method for each individual penetration
  - Tested in accordance with ANSI N14.5
  - Acceptance criteria based on fabrication verification leakage test limit

HOLTEC
INTERNATIONAL

Normal and Accident Conditions of Transport

- **Overpack Stress Limits Are Within Their Code-Allowable Limits**
- **Overpack Temperatures Are Within Design-Basis Limits**
- **Overpack Pressures Are Within Design-Basis Limits**
- **No risk of Overpressurization**
- **Overpack Pressure Below Design Basis for the Most Adverse Conditions**
  - Complete loss of MPC pressure boundary
  - 100% gas gap release
  - Design basis fuel conditions
  - 10 CFR Part 71 fire

HOLTEC INTERNATIONAL

Containment Criterion for Transport Conditions

- **Leakage Rates Determined in Accordance With ANSI N14.5**

- **Assumptions**
  - 3% fuel rod rupture normal transport
  - 100% fuel rod rupture during transport accident
  - 30% of the Tritium and ^{85}Kr escapes from failed fuel rods
  - 15% of the ^{60}Co of crud released as aerosol (normal)
  - 100% of the ^{60}Co on assembly surface released as aerosol (accident)
  - ^{60}Co source based on 140 micro-ci/cm^2

- **Nuclides Quantities Based on Bounding ORIGEN-S Calculations**
  - B&W 15x15, 45,000 MWD/MTU, 10-yr cooled
  - GE 8x8R, 45,000 MWD/MTU, 10-yr cooled

HOLTEC
INTERNATIONAL

Conclusions

- **The HI-STAR 100 Confinement Boundary Design and Operating Conditions Meet all Requirements for Normal and Hypothetical Accident Conditions of Storage Defined in 10CFR Part 72**

- **The HI-STAR 100 Containment Boundary Design and Operating Conditions Meet all Requirements for Normal and Hypothetical Accident Conditions of Transport Defined in 10CFR Part 71**

HOLTEC
INTERNATIONAL

HI-STAR 100 SYSTEM

Operations and Acceptance Testing

USNRC Meeting
February 10, 1997

Stephen Agace
Manager of Operations

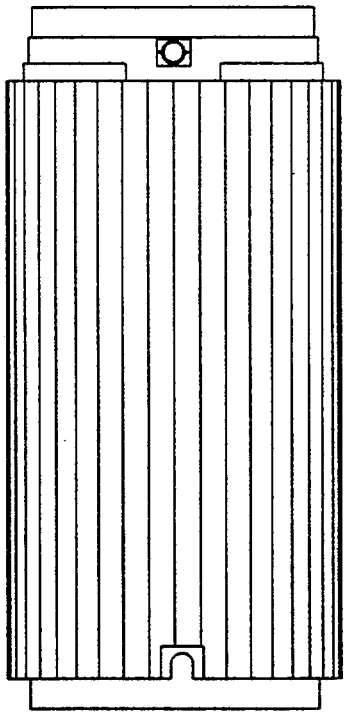

HOLTEC
INTERNATIONAL

Presentation Outline

- Operations Development
- Operations Overview
- Utility Events/Experience
- HI-STAR 100 System Technical Specifications
- MPC Unloading
- HI-STAR 100 System Acceptance Testing

HOLTEC
INTERNATIONAL

Operations Development

- Operations Are Based on Conservative, Site-Proven Methods
- Utility Events/Experiences Have Been Incorporated Into the Procedures
- Good/Safe Utility Work Practices Are Incorporated Into the Procedures in the Form of Notes, Warnings and Cautions
- Procedures Are Presented in a Similar Format to Utility Operating Procedures
- All Operations Are Designed for Safety and ALARA

HOLTEC
INTERNATIONAL

Operations Overview

- **Preparation for Loading**
  - Placement of HI-STAR in the cask washdown area
  - Installation of the MPC
  - MPC fit testing
  - MPC and annulus filling
  - Placement of HI-STAR in the spent fuel pool
- **Fuel Loading**
- **MPC Closure**
  - Removal of HI-STAR from the spent fuel pool
  - Dose rate monitoring
  - Decontamination/installation of the temporary shield ring
  - Lower the MPC water level
  - Weld the MPC lid/ NDE
  - Raise the MPC water level
  - Blow the water from the MPC and measure the volume
  - Vacuum dry the MPC
  - Backfill the MPC with measured volume of Helium

HOLTEC
INTERNATIONAL

Operations Overview (Continued)

- **MPC Closure (Continued)**
  - Helium leak test the lid-to-shell welds
  - Install/weld the vent and drain port cover plates/NDE
  - Pressure-rise leak test the cover plates
  - Install/weld the outer closure ring/NDE
  - Dose rate/contamination monitoring
- **HI-STAR Closure**
  - Install the closure plate
  - Drain and dry the annulus
  - Backfill the annulus
  - Leak test the overpack closure plate seals
  - Install the cover plates/test port plug
  - Remove the temporary shield ring
  - Perform contamination surveys
- **HI-STAR Placement in Storage**
  - Place HI-STAR in storage
  - Install shear ring segments
  - Install pocket trunnion shield plugs

HOLTEC
INTERNATIONAL

Utility Events/Experience

- Load handling
- Contamination Control
- Equipment Removal from the Spent Fuel Pool
- Moisture Condensation
- Vent/Drain Port Cover Plate Leakage Testing
- Water Pumping
- High Dose Rate Locations
- Storage of Components
- Combination of Remote Automated and Manual Welding
- Fuel Cool-down
- Duration of Draining, Drying and Backfill Operations
- Fit-Testing/Alignment
- Welder Removal

HOLTEC
INTERNATIONAL

HI-STAR 100 System Technical Specifications

- **Fuel Characteristics**
  - Type and Physical Condition
  - Cladding Material
  - Burnup and Initial Enrichment
  - Soluble Boron Concentration (MPC-32)
  - Cooling Time
  - Assembly Dimensions
- **MPC**
  - Dryness
  - Helium Backfill Mass
  - Surface Contamination
  - Dose Rates
  - Leakage Rates
  - Field Weld NDE
  - Duration of Vacuum Drying and Backfill Operations

HOLTEC
INTERNATIONAL

HI-STAR 100 System Technical Specifications (Continued)

- **HI-STAR 100**
  - Dryness
  - Helium Backfill Pressure
  - Dose Rates
  - Leakage Rates
  - Operational Lift Height Restrictions
  - Overpack Spacing
  - Weight of Contents
  - Duration of Horizontal Handling Operations

HOLTEC INTERNATIONAL

Helium Backfill Mass

- **The Amount of Helium Backfilled Is Based on the Free Volume of the MPC**

- **Performance**
  - Displace all air in the MPC
  - Measure the water volume displaced from the MPC during blowdown
  - Evacuate the MPC (<10 torr)and verify dryness (pressure rise <8 torr in 10 minutes)
  - Backfill quantity based on the measured volume of water displaced from the MPC (Helium Mass Flow Monitor)

- **Basis**
  - Ensures proper heat transfer
  - Ensures proper operating pressure
  - Ensures inert atmosphere
  - Ensures inventory of oxidizing gasses are below 0.25 % (volume)

HOLTEC INTERNATIONAL

MPC Leakage Rates

- **Leakage Rates Determined in Accordance With ANSI N14.5**
  - Helium Mass Spectrometer Leakage test on the MPC-to-shell weld
  - Pressure-Rise Leakage test on the vent and drain port cover plates
- **Performance**
  - Evacuated test bell
  - Leakage rate must be less than 1×10^{-4} cm^3/sec
- **Basis**
  - Ensures that the quantity of Helium in the MPC is sufficient to meet long-term storage conditions inside the MPC

HOLTEC
INTERNATIONAL

HI-STAR 100 Overpack Leakage Rates

- **All penetrations closed with double metallic seals**
- **Leakage rates determined to meet the most limiting transport requirements (normal vs. accident)**
- **Performance**
  - Evacuated envelop method (ANSI N14.5)
  - Leakage rates must be less than 2.4×10^{-5} cm^3/sec
- **Basis**
  - Ensures that the quantity of Helium in the overpack is sufficient to meet long-term storage conditions.
  - The overpack leakage rate ensures the requirements of 10CFR71.51 are met.

HOLTEC INTERNATIONAL

Duration of Horizontal Handling Operations

- **Based on Design Basis Heat Load**
  - Control the amount of time the loaded package is in the horizontal orientation
  - Stabilization period following upending
- **Basis**
  - To ensure that fuel cladding temperatures remain at or below 900 °F during the overpack transfer operations. (PNL-6189)

HOLTEC INTERNATIONAL

Operational Lift Height Restrictions

- **Based on Contact Stiffness**
  - Outside of the Fuel Building
  - Non-Single Failure Proof Lifting Device
  - Without Drop Protection System
  - Loaded Casks
- **Performance**
  - Prior to cask handling determine the contact stiffness
- **Basis**
  - Ensures that the HI-STAR 100 maximum acceleration does not exceed maximum acceptable value

HOLTEC
INTERNATIONAL

MPC Unloading

- **Situation**
  - No gas sample locations
  - Condition of Valved Quick Disconnect - Unknown
  - MPC under pressurized
  - Fuel at high temperature
  - Risk of over-pressurization of MPC
  - Risk of fuel thermal shock
- **Procedure**
  - Remove closure ring
  - Establish ventilation control
  - Drill 1/8 inch hole through cover plate weld to evaluate Valved Quick Disconnect operability
  - Remove cover plate
  - Depressurize MPC
  - Perform fuel cool-down
  - Fill MPC
  - Remove MPC lid-to-shell weld
  - Unload MPC

HOLTEC INTERNATIONAL

HI-STAR 100 Acceptance Tests

- **Fabrication Leakage Testing of MPC Shell and Overpack to ANSI N14.5**

- **Shielding Tests**
  - Control of neutron shield installation
  - Verification measurements of gamma shield thickness
  - Post-loading neutron and gamma shield effectiveness tests

- **Neutron Absorber Tests of BORAL**
  - Wet chemistry to confirm minimum ^{10}B contents
  - 100% neutron attenuation testing of each BORAL panel to confirm ^{10}B areal density (allows credit for 90% of minimum ^{10}B content for criticality evaluations)

- **Thermal Acceptance Testing of Each HI-STAR Overpack to Confirm Heat Transfer Capability of the As-Fabricated Unit.**