UNITED STATES
NUCLEAR REGULATORY COMMISSION
ADVISORY COMMITTEE ON REACTOR SAFEGUARDS
WASHINGTON, D C. 20555-0001

October 22, 2002

SCHEDULE AND OUTLINE FOR DISCUSSION
497th ACRS MEETING
NOVEMBER 7-9, 2002

THURSDAY, NOVEMBER 7, 2002, CONFERENCE ROOM 2B3, TWO WHITE FLINT NORTH, ROCKVILLE, MARYLAND

1) 8:30 - 8:35 A.M. Opening Remarks by the ACRS Chairman (Open)
   1.1) Opening Statement (GEA/JTL/SD)
   1.2) Items of current interest (GEA/SD)

2) 8:35 - 10:00 A.M. Proposed Resolution of Generic Safety Issue (GSI)-189, "Susceptibility of Ice Condenser and Mark III Containments to Early Failure from Hydrogen Combustion During a Severe Accident" (Open) (TSK/MWW/MRS)
   2.1) Remarks by the Subcommittee Chairman
   2.2) Briefing by and discussions with representatives of the NRC staff on the results of their additional analyses and proposed recommendations for resolving GSI-189.

   Representatives of the nuclear industry may provide their views, as appropriate.

10:00 - 10:15 A.M. ***BREAK***

3) 10:15 - 11:45 A.M. Early Site Permit Process (Open) (TSK/MME)
   3.1) Remarks by the Subcommittee Chairman
   3.2) Briefing by and discussions with representatives of the NRC staff regarding Early Site Permit Process.

   Representatives of the nuclear industry may provide their views, as appropriate.

4) 11:45 - 12:15 P.M. Peach Bottom License Renewal Application (Open) (GML/RRA/TJK)
   Report by the Subcommittee Chairman regarding the October 30, 2002 Plant License Renewal Subcommittee meeting on the license renewal application for the Peach Bottom Nuclear Plant, Units 2 and 3.

12:15 - 1:15 P.M. ***LUNCH***

5) 1:15 - 3:15 P.M. Westinghouse AP1000 Design (Open) (TSK/MME/PAB)
   5.1) Remarks by the Subcommittee Chairman
   5.2) Briefing by and discussions with representatives of Westinghouse regarding the design features of and test information on, the AP1000 design. The NRC staff will provide a status report regarding its review schedule.

3:15 - 3:30 P.M. *****BREAK*****

6) 3:30 - 5:00 P.M

Risk-Informed Improvements to Standard Technical Specifications (Open) (SLR/MWW)

6.1) Remarks by the Subcommittee Chairman

6.2) Briefing by and discussions with representatives of the NRC staff regarding staff's progress on risk-informed improvements to Standard Technical Specifications and related matters.

Representatives of the nuclear industry may provide their views, as appropriate.

5:00 - 5:15 P.M. *****BREAK*****

7) 5:15 - 6:00 P.M.

Report Regarding Recent Operating Events (Open) (GML/MWW)
Report by the Cognizant ACRS member regarding recent operating events of interest.

8) 6:00 - 7:00 P.M.

Preparation of ACRS Reports (Open)
Discussion of proposed ACRS reports on:

8.1) Proposed Resolution of GSI-189 (TSK/MWW/MRS)

8.2) Early Site Permit Process (TSK/MME)

8.3) Risk-Informed Improvements to Standard Technical Specifications (SLR/MWW)

FRIDAY, NOVEMBER 8, 2002, CONFERENCE ROOM 2B3, TWO WHITE FLINT NORTH, ROCKVILLE, MARYLAND

9) 8:30 - 8:35 A.M.

Opening Remarks by the ACRS Chairman (Open) (GEA/JTL/SD)

10) 8:35 - 12:00 Noon

Organizational and Personnel Matters (Closed) (GEA/JTL)
The Committee will discuss organizational and personnel matters as well as the potential improvements to internal ACRS policies and procedures.

[NOTE: This session will be closed pursuant to 5 U.S.C. 552b(c) (2) and (6) to discuss organizational and personnel matters that relate solely to internal personnel rules and practices of ACRS, and information the release of which would constitute a clearly unwarranted invasion of personal privacy.]

12:00 - 1:00 P.M. *****LUNCH*****

11) 1:00 - 4:00 P.M.

Safeguards and Security Activities (Closed) (GEA/RPS)
[THIS SESSION WILL BE HELD IN ROOM T-8E8]

11.1) Report by the Subcommittee Chairman regarding matters discussed at the October 31, 2002 meeting of the ACRS Subcommittee on Safeguards and Security.

11.2) Discussion of the content of a proposed report to the Commission on Safeguards and Security matters.

[**NOTE:** This session will be closed pursuant to 5 U.S.C. 552b(c)(1) to protect national security information.]

4:00 - 4:15 P.M. ***BREAK***

12) 4:15 - 5:00 P.M. Future ACRS Activities/Report of the Planning and Procedures Subcommittee (Open) (GEA/JTL/SD)

12.1) Discussion of the recommendations of the Planning and Procedures Subcommittee regarding items proposed for consideration by the full Committee during future ACRS meetings.

12.2) Report of the Planning and Procedures Subcommittee on matters related to the conduct of ACRS business, including anticipated workload and member assignments.

13) 5:00 - 5:15 P.M. Reconciliation of ACRS Comments and Recommendations (Open) (GEA, et al./SD, et al.)
Discussion of the responses from the NRC Executive Director for Operations to comments and recommendations included in recent ACRS reports and letters.

5:15 - 5:30 P.M. ***BREAK***

14) 5:30 - 7:00 P.M. Preparation of ACRS Reports (Open)
Discussion of proposed ACRS reports on:

14.1) Proposed Resolution of GSI-189 (TSK/MWW/MRS)

14.2) Early Site Permit Process (TSK/MME)

14.3) Risk-Informed Improvements to Standard Technical Specifications (SLR/MWW)

SATURDAY, NOVEMBER 9, 2002, CONFERENCE ROOM 2B3, TWO WHITE FLINT NORTH, ROCKVILLE, MARYLAND

15) 8:30 - 10:00 A.M. Preparation of ACRS Reports (Open)
Continue discussion of the proposed ACRS reports listed under Item 14.

10:00 - 10:15 A.M. ***BREAK***

16) 10:15 - 12:15 P.M. Annual ACRS Report on the NRC Safety Research Program (Open) (FPF/RPS)

16.1) Remarks by the Subcommittee Chairman regarding matters discussed at the November 6, 2002 Subcommittee meeting.

16.2) Discussion of a draft ACRS report to the Commission on the NRC Safety Research Program.

12:15 - 12:30 P.M. ***BREAK***

17) 12:30 - 1:00 P.M. Miscellaneous (Open) (GEA/JTL)
Discussion of matters related to the conduct of Committee activities and matters and specific issues that were not completed during previous meetings, as time and availability of information permit.

NOTE:

- **Presentation time should not exceed 50 percent of the total time allocated for a specific item. The remaining 50 percent of the time is reserved for discussion.**
- **Thirty-Five (35) copies of the presentation materials should be provided to the ACRS.**

Technical Assessment of GSI-189

Advisory Committee on Reactor Safeguards
Subcommittee Meeting

NOVEMBER 5, 2002

Jack Rosenthal
Safety Margins and Systems Analysis Branch
Division of Systems Analysis and Regulatory Effectiveness
Office of Nuclear Regulatory Research

GENERIC SAFETY ISSUE 189: "SUSCEPTIBILITY OF ICE CONDENSER AND MARK III CONTAINMENTS TO EARLY FAILURE FROM HYDROGEN COMBUSTION DURING A SEVERE ACCIDENT"

...applies specifically for postulated SBO events

- Issue was raised as part of the effort to risk-inform 10CFR 50.44 (H2 Control):

- **GSI-189 resolution:**

  - Met with ACRS on June 6, 2002 on Technical Assessment
  - ACRS letter, June 17th; perform additional analysis to quantify uncertainties and brief ACRS again

  –RES completed a refined Technical Assessment

  - RES plans to transmit Technical Assessment with recommendations to NRR by end of CY02

TECHNICAL ASSESSMENT OUTLINE

- BENEFITS ANALYSIS
- COST ANALYSIS
- ICE CONDENSER Hydrogen Control
- SUMMARY & RECOMMENDATIONS

OBJECTIVE

- Estimate the benefit obtained from enhancing current combustible gas control systems to make them operable during station blackout (SBO)

- Address previous ACRS comments by including additional assessment of the uncertainty in the benefit estimates

BASIS FOR ANALYSIS

Benefit analysis carried out in accordance with the guidance provided in:

- NUREG/BR-0058, Regulatory Analysis Guidelines of the U.S. Nuclear Regulatory Commission, and
- NUREG/BR-0184, Regulatory Analysis Technical Evaluation Handbook.

Benefit consist of averted risk which includes:

- reductions in public and occupational radiation exposure,
- averted offsite property damage

BASIS FOR ANALYSIS

Benefit = averted risk = risk reduction due to the enhancement

For combustible gas control in containment during station blackout (SBO):

Risk Reduction =
[SBO frequency] x
[Change in Conditional Probability of Early Failure (CPEF) due to enhancement] x
[Consequences of Early Failure]

Consequences consist of:

- exposure (person-rem) and
- property damage ($)

APPROACH

Results from a Level 3 PRA are needed to estimate reduction in risk in terms of offsite person rem as well as offsite costs.

The benefit estimate is based on previously obtained PRA results from a number of existing studies.

Since a Level 3 PRA analysis was needed, the NUREG-1150 studies were used to:

- assess accident progression
- obtain base case benefit estimates

APPROACH

Uncertainties associated with each part of analysis (no integrated uncertainty analysis available):

- SBO frequency
- CPEF
- consequences

To estimate uncertainty ranges, a number of sources with uncertainty and sensitivity information were considered:

- NUREG-1150 (SBO frequency, CPEF)
- Industry results (SBO frequency, CPEF, consequences)
- IPE ranges (SBO frequencies)
- SPAR models (SBO frequencies)

ASSUMPTIONS

All benefit calculations carried out assuming:

- combustible gas control system is 100% effective
- gas combustion is principal cause of CPEF in SBO sequences
- late containment failures are not averted by the gas control system

ASSUMPTIONS

- Public health from radiation exposure and offsite property impacts are examined over a 50-mile radius from the plant site
- A conversion factor of $2000 per person-rem is used to convert health effects attributable to radiological exposure to monetary terms
- All values and impacts are expressed on a present worth basis for lifetime benefits
- 40 years of plant life remain
- A 7% discount rate is used for the present value calculation (sensitivity analysis with a 3% rate)

PWR ICE CONDENSER ANALYSIS

Sequoyah NUREG-1150 study:

Sequoyah Uncertainty Ranges for Internal Events			
	5th	mean	95th
SBO CDF frequency from NUREG-1150 (per reactor year)	5.2E-7	1.5E-5	5.3E-5
CPEF due to LOSP from NUREG/CR-4551, Vol. 5	1.3E-4	0.15	0.65

PWR Ice Condensers - Averted Costs ($k)

Plant	Case		Source of SBO frequency used					
	Cond Cntmt Failure Prob	Source Term	Internal Events					External Events
			Pt Est	Uncertainty			Upper Bound Estimate of 95th combined (Lv1&Lv2) uncertainty	Pt Est
				5th	mean	95th		
Sequoyah			*NUREG-1150*					
1	EF =0.15 (N1150 mn)	1150S (update)	NA	11	320	1,200	3,200	NA
2	EF =0.65 (N1150 95th)			50	1,400	5,000		
3	EF=0.97 (N/C 6427)			74	2,100	7,500		
Catawba			*Duke PRA Rev 2b*					
1	EF=0.29 LF=0.71 (N/C6427 & Duke PRA range)	Duke	180	11*	220*	750*	2,200*	120
2		1150S	640	40*	790*	2,700*		420
3		1150S* 1.8	870	54*	1,100*	3,700*		580
			Duke Rev 2b with RCP seal replaced					
4	same as above	Duke	120	6*	150*	530*	1,500*	NA
5		1150S	420	22*	540*	1,900*		
6		1150S* 1.8	570	31*	740*	2,600*		
			Duke Rev 2b w RCP seal replaced & flood wall installed					
7	same as above	Duke	14	2*	31*	100*	310*	NA
8		1150S	52	7*	110*	370*		
9		1150S* 1.8	70	9*	150*	500*		
McGuire			*Duke PRA Rev 3*					
1	EF=0.26 LF=0 56 NF=0.18 (Duke PRA range)	Duke	13	2*	32*	110*	320*	98
2		1150S	44	8*	110*	380*		340
3		1150S* 2.3	72	13*	180*	600*		540

* includes SBO frequency due to tornado

BWR MARK III ANALYSIS

Important considerations:

- need to fail both drywell and containment to get significant release
- NUREG-1150 accident progression indicates igniters only effective for sequences with low RCS pressure (about 40% of all sequences)
- No industry results available

BWR MARK III ANALYSIS

Grand Gulf NUREG-1150 Study:

Grand Gulf uncertainty ranges for internal events			
	5th	mean	95th
SBO CDF frequency from NUREG-1150 (per reactor year)	1.7E-7	3.9E-6	1.1E-5
CPEF due to SBO from NUREG/CR-4551, Vol. 6	~1.E-2	~0.5	~1.0

SPAR Models:

SPAR 3i SBO CDF ranges for internal events (ry)			
	5th	mean	95th
Grand Gulf	1.4E-7	2.4E-6	8.2E-6
River Bend	2.7E-8	1.0E-5	2.8E-5

BWR MARK III ANALYSIS

Grand Gulf NUREG-1150 Study:

Conditional Containment and Drywell Failure Probabilities for Grand Gulf				
RCS Pressure at Vessel Breach	Station Blackout, SBO (Igniters and Sprays unavailable)		Non-SBO (Igniters and Sprays available)	
	Containment Fail	Containment and Drywell Fail	Containment Fail	Containment and Drywell Fail
High	~ 0.5	~ 0.2	~ 0.5	~ 0.2
Low	~ 0.5	~ 0.2	~ 0.01 - 0.02	~ 0.01

BWR Mark IIIs Averted Costs ($k)

Plant & Case description		Source of SBO frequency			
		Internal Events			External Events
		5th	mean	95th	
Grand Gulf		*NUREG-1150*			
1	Mean NUREG-1150 CPEF	<1	10	29	NA
2	95th NUREG-1150 CPEF	<1	22	61	
3	95th NUREG-1150 CPEF 50% of sequences at low pressure, drywell always fails if containment fails	2	60	170	
		SPAR 3i			
4	Mean NUREG-1150 CPEF	<1	6	22	NA
5	95th NUREG-1150 CPEF	<1	13	45	
6	95th NUREG-1150 CPEF 50% of sequences at low pressure, drywell always fails if containment fails	2	36	120	
River Bend		*SPAR 3i*			
1	Mean NUREG-1150 CPEF	<1	57	160	NA
2	95th NUREG-1150 CPEF	<1	120	330	
3	95th NUREG-1150 CPEF 50% of sequences at low pressure, drywell always fails if containment fails	<1	320	880	

COMPARISON OF RESULTS

- Comparison of the results for Sequoyah (PWR ice condenser) with results for Grand Gulf (BWR Mark III) shows that the estimated benefit of providing combustible gas control during SBO sequences differs significantly (a factor of roughly 30) for these two plants.

Parameter comparison			
Parameter	Sequoyah value	Grand Gulf value	Sequoyah/ Grand Gulf
SBO frequency	1.5E-5	3.9E-6	3.8
Approximate averted CPEF	0.15	0.09	1.7
Off-site person rem 2000 estimate	3.1E+6	6.1E+5	5.1
TOTAL FACTOR			~30

Cost (Impact) Assessment Process: GI-189

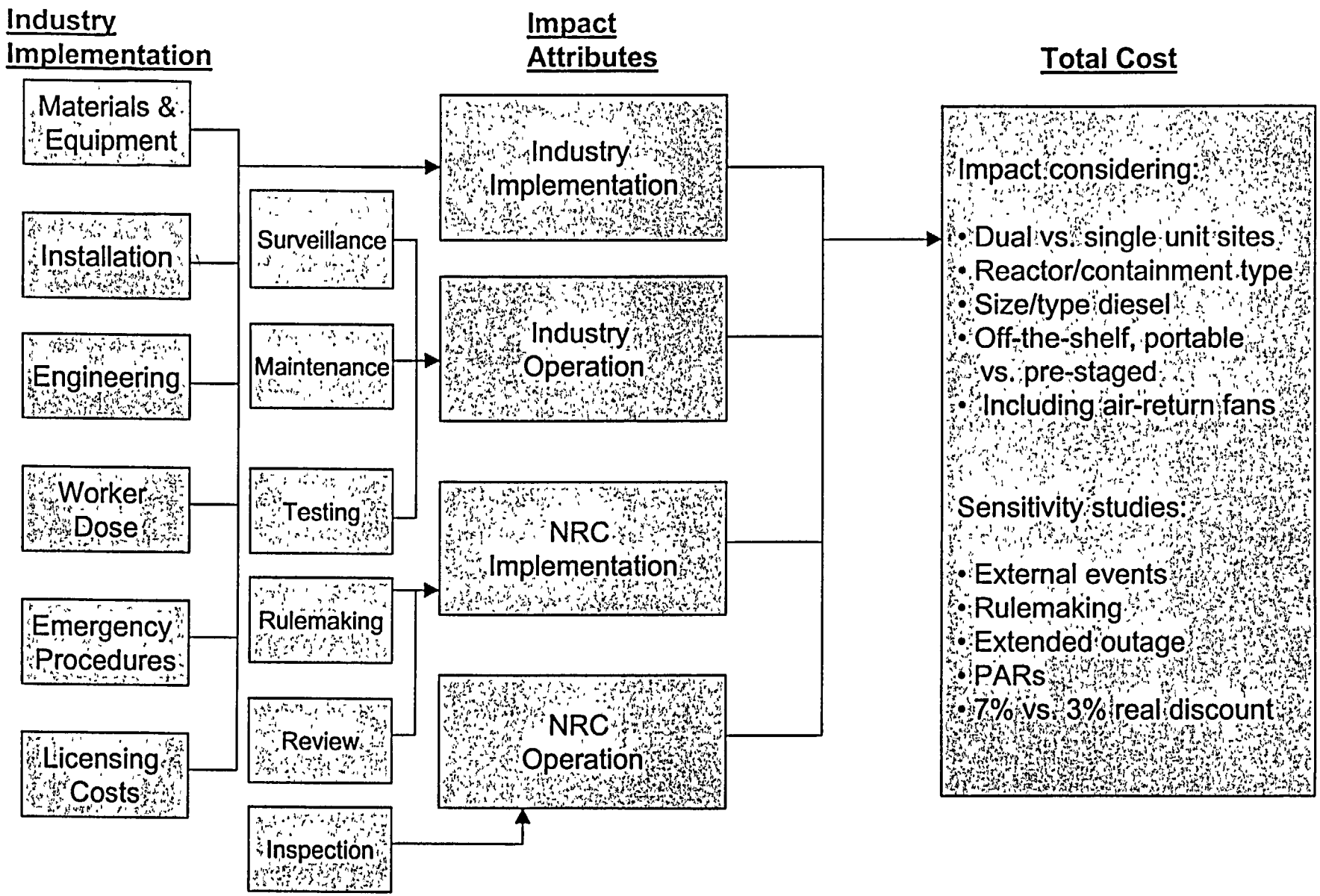

COST ASSESSMENT PROCESS
(continued)

Physical Modifications Considered:

- Base case - pre-staged diesel to power igniters
- Alternative - portable diesel to power igniters
- Pre-staged diesel to power igniters and air return fans (ARFs require 20-30 kW)
- Passive autocatalytic recombiners (PARS)

Differentiated By:

- Type of reactor/containment/balance-of-plant
- Number of reactors on site (dual vs. single-unit)
- power requirements for igniters (5kW - 21kW)

KEY ASSUMPTIONS

- Base case is a pre-staged diesel generator located near the auxiliary building.
- Activation of backup system is remote (located at the diesel generator) and manual.
- All costs are in 2002 dollars.
- 40 years of operation, starting in 2002.
- Backup power supply need not be safety grade.
- Powering one train of igniters is necessary & sufficient for mitigation.

COST ANALYSIS RESULTS

PER REACTOR COST (THOUSANDS OF 2002 DOLLARS)

	Ice Condenser Best Estimate[1]	Mark III Best Estimate
Pre-staged/igniters – base case	270	310
Base case + external event qualified	490	550
Base case + major rulemaking	290	330
Base case + extended outage	370	410
Portable/igniters	200	230
Pre-staged/igniters/air return fans	590	N/A
PARs	1700	1750

[1]The Best Estimate is an average of the estimates developed for each of the three categories of ice condenser plants.

Hydrogen Control Issues Addressed

- Multi-cell MELCOR input for evaluation of ice condenser plant performance during SBO-type events (standalone containment analysis)
- Selection of hydrogen source terms based on MELCOR uncertainty calculations for short term SBO with pump seal leakage
- Relative comparison of thermal-hydraulic and hydrogen control results involving auxiliary power options:
  - No Power
  - Power to Igniters only
  - Power to Igniters and Single Fan Train

- Uncertainty/Sensitivity study for containment model and hydrogen burn parameters

In-vessel Hydrogen Generation for MELCOR Runs #21 - #40

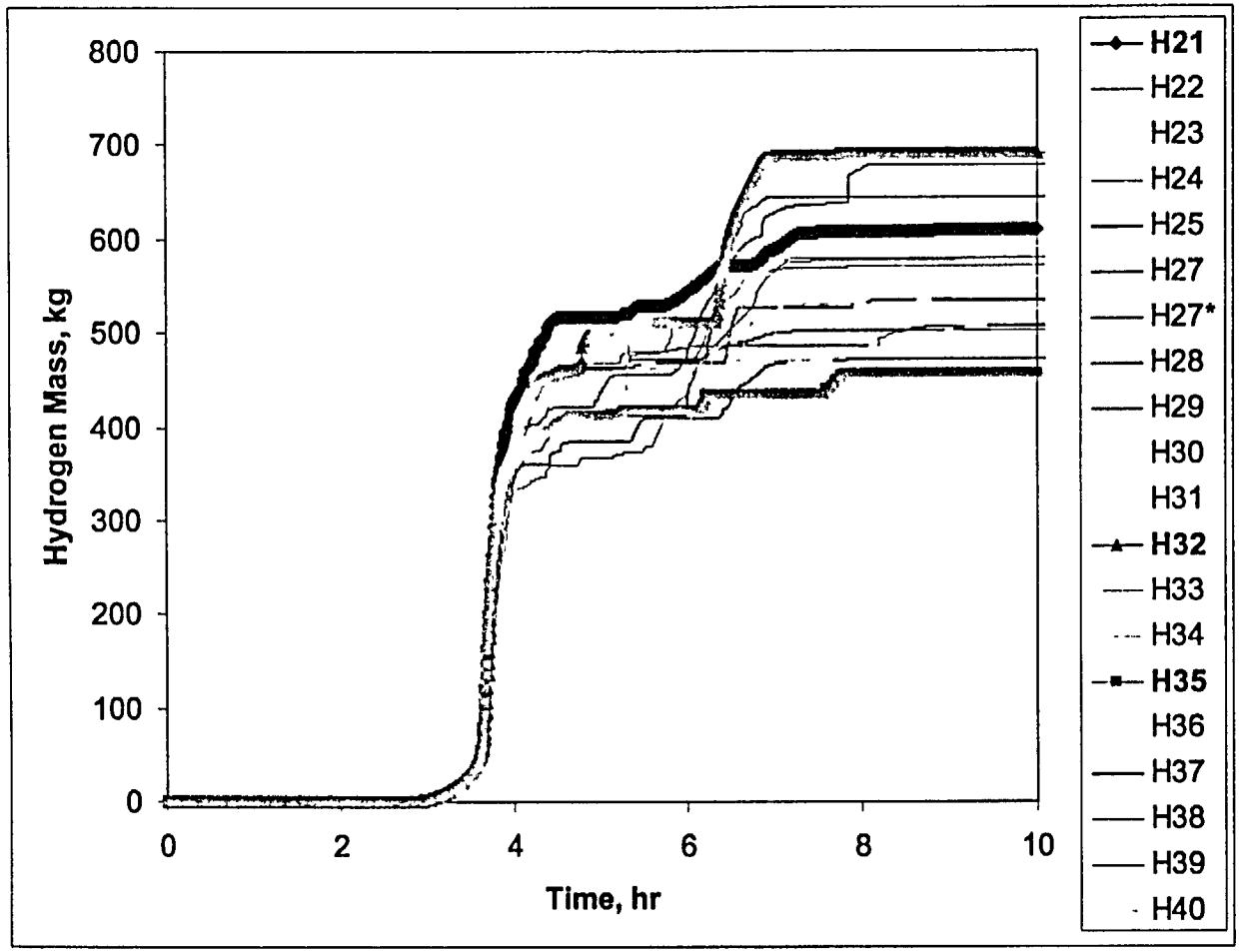

Containment Pressure for Delayed Deflagration at Vessel Failure
No Aux Power (Reference, Run #21 H_2 Source Term)

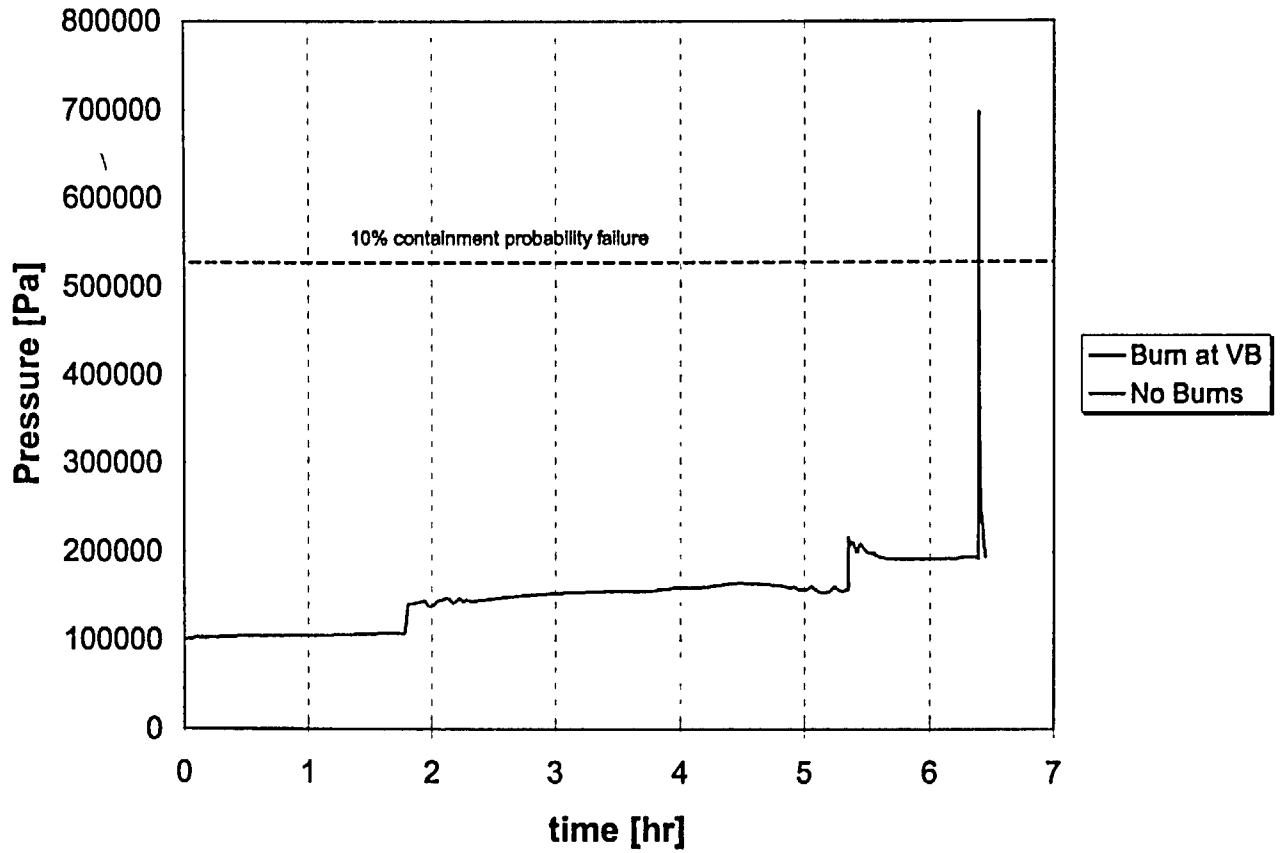

Upper Containment Hydrogen Control for Aux. Power Options (Reference H_2 Source Term, Run #21)

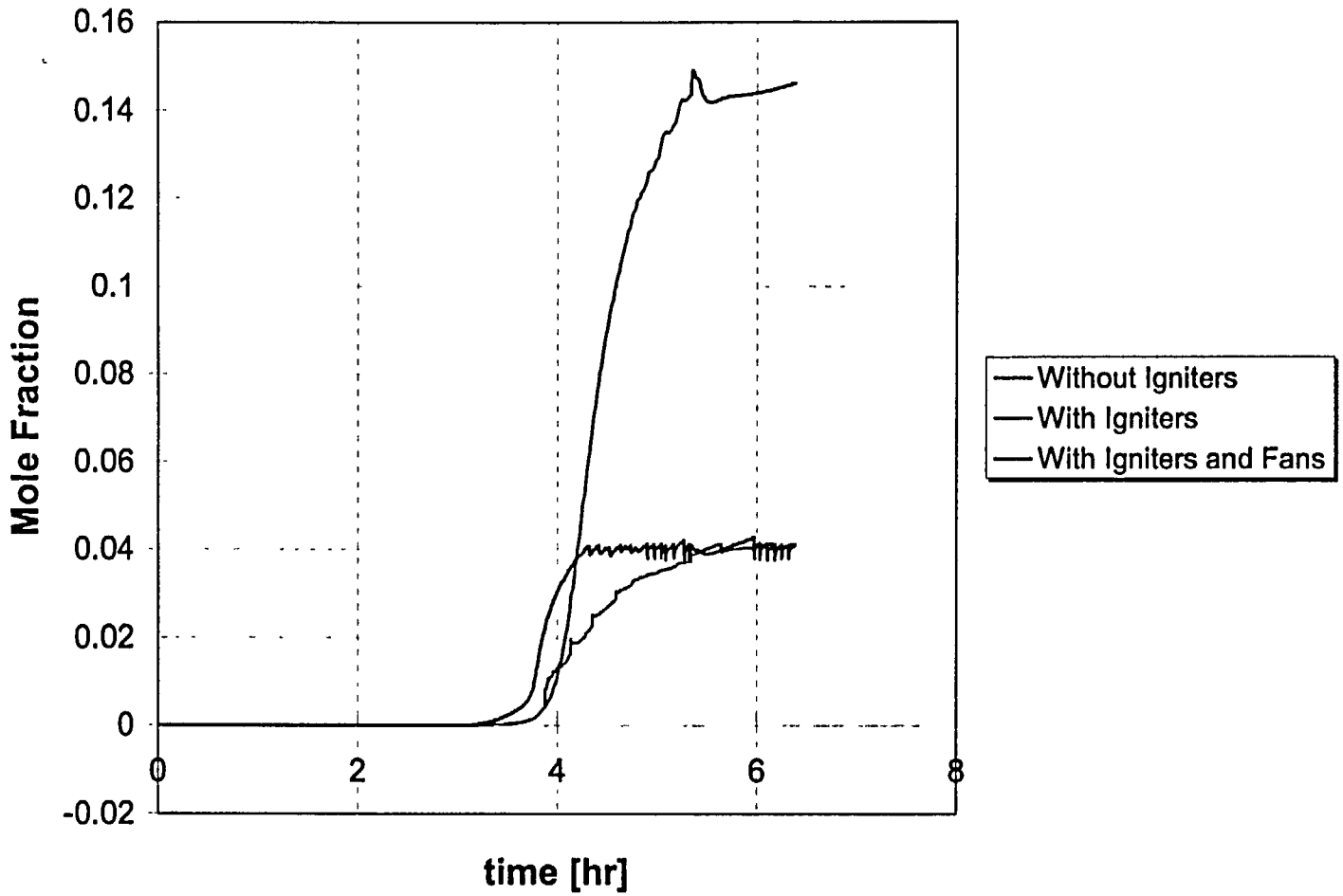

Hydrogen Control Study for Sequoyah SBO Event Conclusions

- Hydrogen control required to mitigate severe threat to containment
- Either Aux. power to igniters or igniters and fans provides *adequate* control
- Aux power to igniters and fans produces more uniform burning throughout containment (with more burning at igniter locations)
- Aux power to igniters and fans causes a more rapid depletion of ice (e.g., ~ 37% increase in ice melt at vessel failure with power to fans)
- H_2 source term uncertainty is not a significant factor affecting hydrogen control (e.g., aux. power options)
- Circulation of upper containment air through refueling drains can significantly affect the degree of lower containment burning (elimination of circulation reduces lower compartment burns as a result of oxygen depletion and steam inerting); however, hydrogen control remains effective.
- Statistical uncertainty analysis for burn parameters indicated ice bed as the more sensitive region for hydrogen control uncertainty (ice bed hydrogen conc. for power to igniters only, uncertainty range 9.5 – 14.7%)

ICE CONDENSER Averted Costs ($k)

Plant	Case		Source of SBO frequency used					
	Cond Cntmt Failure Prob	Source Term	Internal Events					External Events
			Pt Est	Uncertainty			Upper Bound Estimate of 95th combined (Lv1&Lv2) uncertainty	Pt Est
				5th	mean	95th		
Sequoyah			*NUREG-1150*					
1	EF =0.15 (N1150 mn)	1150S (updated)	NA	11	320	1,200		NA
2	EF =0 65 (N1150 95th)			50	1,400	5,000	3,200	
3	EF=0.97 (N/C 6427)			74	2,100	7,500		
Catawba			*Duke PRA Rev 2b*					
1	EF=0.29 LF=0.71 (N/C6427 & Duke PRA range)	Duke	180	11*	220*	750*		120
2		1150S	640	40*	790*	2,700*	2,200*	420
3		1150S*1.8	870	54*	1,100*	3,700*		580
			Duke Rev 2b with RCP seal replaced					
4	same as above	Duke	120	6*	150*	530*		NA
5		1150S	420	22*	540*	1,900*	1,500*	
6		1150S*1 8	570	31*	740*	2,600*		
			Duke Rev 2b w RCP seal replaced & flood wall installed					
7	same as above	Duke	14	2*	31*	100*		NA
8		1150S	52	7*	110*	370*	310*	
9		1150S*1.8	70	9*	150*	500*		
McGuire			*Duke PRA Rev 3*					
1	EF=0.26 LF=0.56 NF=0 18 (Duke PRA range)	Duke	13	2*	32*	110*		98
2		1150S	44	8*	110*	380*	320*	340
3		1150S*2.3	72	13*	180*	600*		540

* includes SBO frequency due to tornado

MARK III- Averted Costs ($k)					
Plant & Case description		Source of SBO frequency			
		Internal Events			External Events
		5th	mean	95th	
Grand Gulf		*NUREG-1150*			
1	Mean NUREG-1150 CPEF Split fractions from Figs 1&2	<1	10	29	NA
2	95th NUREG-1150 CPEF Split fractions from Figs 1&2	<1	22	61	
3	95th NUREG-1150 CPEF 50% of sequences at low pressure, drywell always fails if containment fails	2	60	170	
		SPAR 3i			
4	Mean NUREG-1150 CPEF Split fractions from Figs 1&2	<1	6	22	NA
5	95th NUREG-1150 CPEF Split fractions from Figs 1&2	<1	13	45	
6	95th NUREG-1150 CPEF 50% of sequences at low pressure, drywell always fails if containment fails	2	36	120	
River Bend		*SPAR 3i*			
1	Mean NUREG-1150 CPEF Split fractions from Figs 1&2	<1	57	160	NA
2	95th NUREG-1150 CPEF Split fractions from Figs 1&2	<1	120	330	
3	95th NUREG-1150 CPEF 50% of sequences at low pressure, drywell always fails if containment fails	<1	320	880	

Toward First-Ever Part 52 Early Site Permits

ESP Objectives, Activities and Key Issues

NEI Presentation to ACRS

November 7, 2002

NEI

Presentation Outline

- Background and objectives
- ESP Task Force activities
- Plant parameters envelope approach for ESP
- Other important ESP topics
- Proposed ESP Review Standard
- Questions/Discussion

NEI

"New" Part 52 Licensing Process

- Design Certification
  - Three complete
  - One in progress, others coming
- Early Site Permits
  - First three in progress
- Combined License
  - Future

Pilot ESP Plans & Schedules

- Exelon
  - Clinton site
  - Planning for June 2003 submittal
- Entergy
  - Grand Gulf site
  - Planning for June 2003 submittal
- Dominion
  - North Anna site
  - Planning for September 2003 submittal

Pre-Application Activities

- As with design certification before and COL to come, numerous common issues affect first-time ESP applicants
- ESP applicants working together via NEI task force to
  - Avoid duplication of efforts
  - Seek efficiencies from standardized approaches
  - Resolve generic issues with NRC early
- Emulating license renewal interactions
  - Applicant-specific interactions w/NRC as necessary

NEI

- Generic ESP topics and status

NEI

Status of Generic ESP Interactions

ESP Topic Higher priority topics shaded	Initial Discussion	Resolution Pending	Discussions Ongoing	Next Discussion	NEI Letter	NRC Response	Potential Snr. Mgmnt Issue	Remarks
1. ESP application form & content	8/22		x					NRC provided TOC comparison on Oct. 16
2. ESP inspection guidance	4/24		x					• IMC-2501 issued; reflects QA open issue (see ESP-3) • ESP Review Std to be issued for use & comment by year end
2a. Pre-application interactions (voluntary nature, plans for local public mtgs & review fee structure)	4/24	x						
3. QA requirements for ESP information	5/28		x	12/5			x	Open issue – Appendix B applicability of to ESP
4. Nominal NRC review timeline	10/17		x	1Q03				
5. Mechanism for documenting resolution of ESP issues	5/28	x			9/10			
6. Use of plant parameters envelope (PPE) approach	7/16		x	12/5			x	Remaining aspects of PPE approach and NRC questions to be discussed Dec. 5
7. Guidance for satisfying §52.17(a)(1) requirements	7/16		x	12/5			x	Subset of ESP-6
8. Fuel cycle and transportation impacts (Tables S-3 & S-4)	9/25		x	12/5				
9. Criteria for assuring control of the site by the ESP holder				1Q03				
10. Use of License Renewal GEIS for ESP	9/25	x						
11. Criteria for determining ESP duration (10-20 years)				12/5				

ESP Topic Higher priority topics shaded	Initial Discussion	Resolution Pending	Discussions Ongoing	Next Discussion	NEI Letter	NRC Response	Potential Snr. Mgmnt Issue	Remarks
12. Guidance for evaluating severe accident mitigation alternatives under NEPA	8/22		x	12/5				Deferral to COL likely; to be further discussed Dec. 5 in connection with ESP-6
13. Guidance for ESP seismic evaluations	6/13		x	1/03				2nd meeting on pilot demonstration activity planned for Jan. 2003
14. Applicability of Federal requirements concerning environmental justice				1Q03				Evaluating related PFS decision by Commission
15. Appropriate level of detail for site redress plans	9/25	x						
16. Guidance for ESP approval of emergency plans				1Q03				
17. Petition to eliminate duplicative NRC review of valid existing site/facility information								Staff recommendation pending on petition PRM-52-1
18. Petition to eliminate reviews for alternate sites, sources and need for power								Staff recommendation pending on petition PRM-52-2
18a Alternative site reviews				12/5				
19. Addressing effects of potential new units at an existing site				1Q03				
20. Practical use of existing site/facility information	9/25	x						
21. Understanding the interface of ESP with the COL process.				2Q03				
22. Form and content of an ESP	x		x	12/5			x	NEI draft provided Aug. 22; NRC feedback requested for Dec. 5 meeting

ESP Fulfills Key Objectives

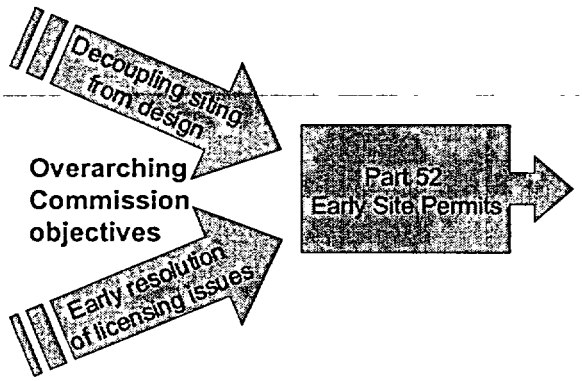

ESP Objectives

- ► Pre-approval of sites as a separate matter from design ("banking")
- ► Resolution of site suitability issues, both safety and environmental

Two ESP Scenarios

- ESP application specifies design characteristics for the specific facility to be built
- ESP application specifies postulated design parameters as a surrogate for actual facility information

Goal of Pilot ESP Applicants

- Pre-approval of sites for future nuclear plants in a manner that
  - Maximizes resolution of safety and environmental issues associated with the site
  - Preserves essential flexibility for future COL applicants to select the best technology at the time a decision to build is made
- Establish predictable & efficient review process for future ESP applicants

NEI

Necessary Assumptions

- Early design and site approvals under Part 52 require certain assumptions to be made
  - Design certifications assumed a suite of "site parameters" to enable design development and safety reviews, e.g.,
    - Seismic accelerations
    - Maximum precipitation, flood level, wind speed
    - Soil properties, etc.
  - For early site permits that do not specify facility type, an array of "design parameters" must be assumed to facilitate site suitability evaluations, e.g.,
    - Cooling water requirements
    - Acreage/footprint
    - Effluents and releases

NEI

The PPE Approach

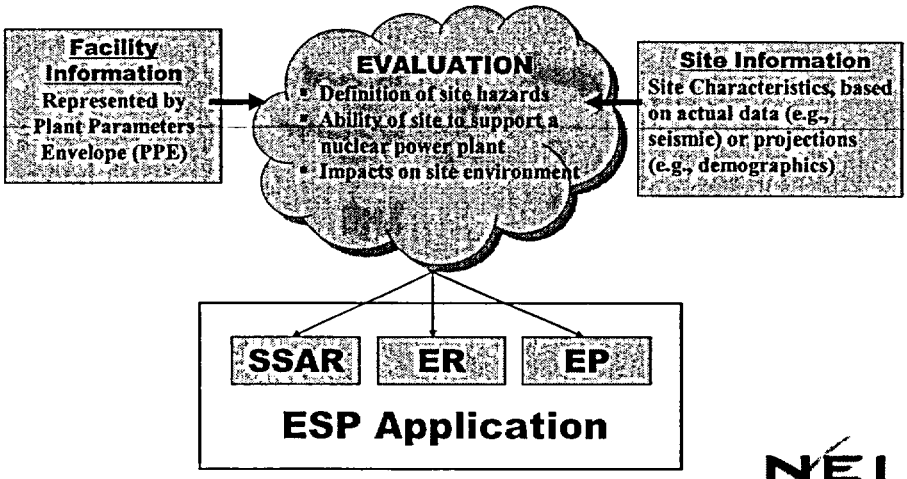

Key Topic – Plant Parameters Envelope Approach

- What is a PPE?
  - The set of postulated design parameters that are expected to bound the characteristics of a reactor or reactors that might later be deployed at a site
  - Used to obtain an Early Site Permit when the type of plant to be built has not been determined

Part 52 Early Site Permit Process

Plant Parameters Envelope Approach

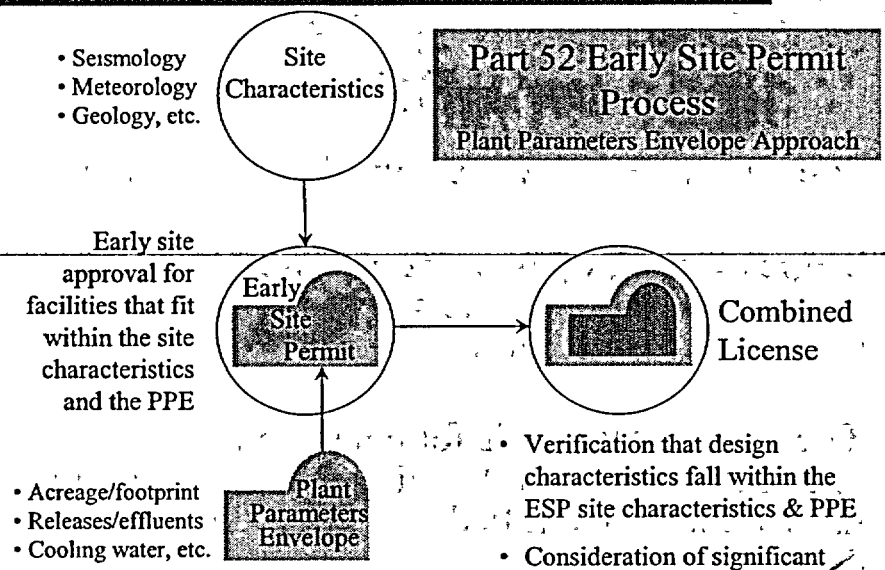

ESP/Part 52 Terminology

(Proposed working definitions)

Term	Definition
Site parameters	The postulated physical, environmental and demographic features of an as-yet unidentified site
Design parameters	The postulated features of the reactor or reactors that could be built
Site characteristics	The real physical, environmental and demographic features of the proposed facility location
Design characteristics	The real features of a reactor or reactors

Key Envisioned NRC Findings for ESP

- **Site characteristics are complete and accurate**
- **Scope of design parameters is sufficient** for purposes of required site safety and environmental reviews
- **The site is acceptable** for construction and operation of reactor(s) having characteristics that fall within the identified site characteristics and design parameters

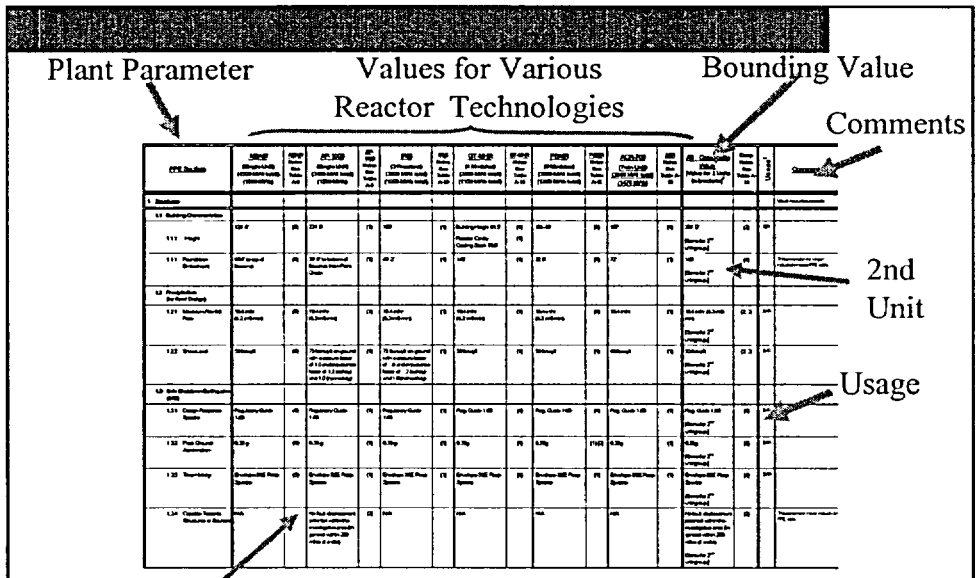

PPE Worksheet General Layout (Typical)

Plant Parameter

Values for Various Reactor Technologies

Bounding Value

Comments

PPE Section	ABWR (Single Unit) (4300 MWt total) (1500 MWe)	ABWR Notes See Table A-8	AP-1000 (Single Unit) (3400 MWt total) (1200 MWe)	AP-1000 Notes See Table A-9	IRIS (3 Reactors) (3000 MWt total) (1005 MWe total)	IRIS Notes See Table A-10	GT-MHR (4 Modules) (2400 MWt total) (1150 MWe total)	GT-MHR Notes See Table A-11	PBMR (8 Modules) (3200 MWt total) (1280 MWe total)	PBMR Notes See Table A-12	ACR-700 (Twin Unit) (3965 MWt total) (1478 MWe)	ACR Notes See Table A-13	All - Composite Value (Value for 2 Units in brackets)[1]	Comp Notes See Table A-14	Usage[2]	Comment
1 Structures																Visual resources impacts
1.1 Building Characteristics																
1.1.1 Height	123' 8"	(9)	234' 0"	(1)	105'	(1)	Building Height 81.5' Reactor Cavity Cooling Stack 95.6'	(1) (1)	134.48'	(1)	197'	(1)	234' 0" [Same for 2nd unit/group]	(2)	BR	
1.1.1 Foundation Embedment	65'4" to top of Basemat	(9)	39' 6" to bottom of Basemat from Plant Grade	(1)	49' 2"	(1)	140'	(1)	32.8'	(1)	72	(1)	140' [Same for 2nd unit/group]	(4)		This parameter no longer included in latest PPE table.
1.2 Precipitation (for Roof Design)																
1.2.1 Maximum Rainfall Rate	19.4 in/hr (6.2 in/5 min)	(9)	19.4 in/hr (6.3 in/5 min)	(1)	19.4 in/hr (6.3 in/5 min)	(1)	19.4 in/hr (6.2 in/5 min)	(1)	19.4 in/hr (6.2 in/5 min)	(1)	19.4 in/hr	(1)	19.4 in/hr (6.3 in/5 min) [Same for 2nd unit/group]	(2, 3)	SAR	
1.2.2 Snow Load	50 lb/sq ft	(9)	75 lbs/sq ft on ground with exposure factor of 1.0 and importance factor of 1.2 (safety) and 1.0 (non-safety)	(1)	75 lbs/sq ft on ground with exposure factor of 1.0 and importance factor of 1.2 (safety) and 1.0 (non-safety)	(1)	50 lb/sq ft	(1)	50 lb/sq ft	(1)	60 lb/sq ft	(1)	50 lb/sq ft [Same for 2nd unit/group]	(2, 3)	SAR	
1.3 Safe Shutdown Earthquake (SSE)																
1.3.1 Design Response Spectra	Regulatory Guide 1.60	(9)	Regulatory Guide 1.60	(1)	Regulatory Guide 1.60	(1)	Reg. Guide 1.60	(1)	Reg. Guide 1.60	(1)	Reg. Guide 1.60	(1)	Reg. Guide 1.60 [Same for 2nd unit/group]	(6)	SAR	
1.3.2 Peak Ground Acceleration	0.30 g	(9)	0.30 g	(1)	0.30 g	(1)	0.30g	(1)	0.30g	(1) (2)	0.30g	(1)	0.30g [Same for 2nd unit/group]	(6)	SAR	
1.3.3 Time History	Envelope SSE Resp Spectra	(9)	Envelope SSE Resp Spectra	(1)	Envelope SSE Resp Spectra	(1)	Envelope SSE Resp Spectra	(1)	Envelope SSE Resp Spectra	(1)	Envelope SSE Resp Spectra	(1)	Envelope SSE Resp Spectra [Same for 2nd unit/group]	(6)	SAR	
1.3.4 Capable Tectonic Structures or Sources	N/A		No fault displacement potential within the investigative area (in general within 200 miles of a site)	(2)	N/A		N/A		N/A		N/A		No fault displacement potential within the investigative area (in general within 200 miles of a site) [Same for 2nd unit/group]	(2)		This parameter never included in PPE table.

2nd Unit

Usage

Footnote Column

PPE Worksheet General Layout (Typical)

PPE Values, Site Characteristics, and the Permit Basis

Parameter	Bounding Value	Site Characteristic	Permit Basis
Building Height	234	None	234
Snow Load (Case A)	50	30	30
Snow Load (Case B)	50	80	80

- Applicants will submit a combination of bounding design parameter values and site characteristics
- The combination of bounding design parameter values and site characteristics form the "permit basis"

NEI

Key PPE Issues

- Nature of NRC review of bounding design parameters (PPE values) vs. site characteristics
  - Site characteristics must be determined accurate and complete
  - Reviews for "correctness" of PPE values not required; expected focus on acceptability of environmental impacts
- Compatibility of PPE approach with required NEPA reviews, e.g., use of bounding design parameters to evaluate environmental impacts

NEI

Industry Objectives for Generic Discussions of PPE Issue

- NRC understanding of the source, nature and role of bounding PPE values in ESP applications
- Timely NRC feedback on whether the PPE contains the necessary parameters for performing site suitability reviews
- NRC understanding that technical review and approval of PPE values is not expected or required and that ESP does not involve NRC approval of any design information
- NRC understanding that COL applicants will be required to show that actual plant design characteristics are bounded by ESP site characteristics and design parameters

Establish acceptability of PPE approach for ESP

NEI

PPE Path Forward (ESP-6/7)

- Remaining aspects to be discussed Dec. 5
- NEI white paper to be submitted Dec. 20
  - Discuss all aspects of PPE approach and reflect NRC feedback
  - Include PPE Worksheet
  - Cover letter will request timely feedback re: acceptability of PPE approach
- Follow-up questions addressed in continuing monthly meetings
- Need for clear reviewer guidance on PPE approach

NEI

Other Important ESP Topics

- QA requirements for ESP (ESP-3)
  - Differing views on applicability of Appendix B
  - Fundamental issue for ESP applicants
- Seismic evaluations and reviews (ESP-13)
  - Major effort
  - On the right track
- Nominal NRC review timeline (ESP-4)
  - Important management tool
  - Deferred until early 2003

ESP Review Standard

- Primary purpose – Provide guidance to NRC staff reviewers
  - Required information in ESP application
  - Acceptance criteria
  - Methodology of review
- Also provides insights to ESP applicants
  - Expectations for ESP application content
  - Criteria for review

ESP Review Standard (RS) – NRC Approach

- Point reviewers to applicable existing guidance
- Update existing guidance as needed to reflect Part 52/ESP context
- Provide new guidance where necessary

NEI

Industry Perspective

- Existing safety and environmental review guidance based on CP/OL context
  - NUREG-0800 – SRP (1981) (draft update in 1996)
  - NUREG-1555 – Environmental SRP (1999)
- SRP and ESRP assume at least preliminary design information that may not be available for ESP
- Guidance in SRP and ESRP needs significant updating for Part 52/ESP purposes
- Staff challenge – Developing RS while addressing generic ESP application and review issues with industry
- Industry concerns –
  - Clear guidance needed for review of ESP applications based on PPE approach
  - Indications that design-related SRP sections will be applied to ESP

NEI

Review Guidance Examples: Generally Applicable for ESP

- SRP 2.4.11 – Cooling Water Supply
  - "purpose is… to identify (limiting) natural events… and adequate water supply…" for operations and safe shutdown
- ESRP 3.3.1 - Water Consumption
  - "scope includes… quantity of water required… consumed, and… discharged…" with consideration of environmental impact
- Other Examples
  - SRP – Most of Chapter 2 of NUREG-0800
  - ESRP – Non-design dependent guidance in NUREG-1555

Review Guidance Examples: Limited Applicability for ESP

- SRP 13.3 Emergency Planning
  - "review addresses… emergency planning zones, emergency action levels, emergency response facilities, and evacuation time estimates " (Guidance per NUREG-0654, Rev 1, Supp 2)
  - N/A for ESP: design info for EP facilities
- ESRP 3.4.2 Cooling System Component Descriptions
  - "scope should include. .design data and performance characteristics .."
  - N/A for ESP: pre-employment of personnel & plant layout
- Other Examples
  - SRP – 13.6, Security
  - ESRP – 3 1, External Appearance and Plant Layout

Review Guidance Examples: Not Applicable for ESP

- SRP 12.1 Occupational Radiation Exposures
  - "Information describing how experience from past designs and operating plants has been used to develop improved rad protection designs ..."
- ESRP 7.3 Severe Accident Mitigation Alternatives
  - "The scope includes the identification and evaluation of design alternatives and procedural modifications that reduce the radiological risk from a severe accident ..."
- Other Examples
  - SRP – 12.3-12.4 Radiation Protection Design Features
  - SRP – 12.5 Operational Radiation Protection Program
  - ESRP – 10.4, Benefit-Cost Balance

NEI

ESP Review Standard – Status

- Generic discussions informing RS development
- RS release for use and comment expected in December 2002
- Industry comments will focus on assuring
  - Clarity of reviewer guidance
  - ESP context is properly reflected

NEI

Summary

- PPE approach is central to ESP applicant objectives; working towards common understanding with NRC staff
- Clear guidance needed to support efficient ESP application reviews
- Would welcome the opportunity to update the Committee ESP-related topics in the future

Presentation to the Advisory Committee on Reactor Safeguards

EARLY SITE PERMIT (ESP) AND ESP REVIEW STANDARD

Presented By

Ronaldo Jenkins

Michael Scott

Early Site Permit Project Managers

New Reactor Licensing Project Office

November 7, 2002

Purpose

- Summarize the ESP process and recent history as background for discussion
- Brief the Committee on the draft ESP Review Standard (RS)
- Discuss future milestones for ESP RS document development and use
- Address Committee questions or comments on ESP process or ESP RS

Agenda

• Background on ESP process and recent history	5 min
• ESP RS document development approach	5 min
• ESP RS document content	5 min
• Next steps	5 min
• Discussion/questions	25 min

Combined Licenses, Early Site Permits, and Standard Design Certifications

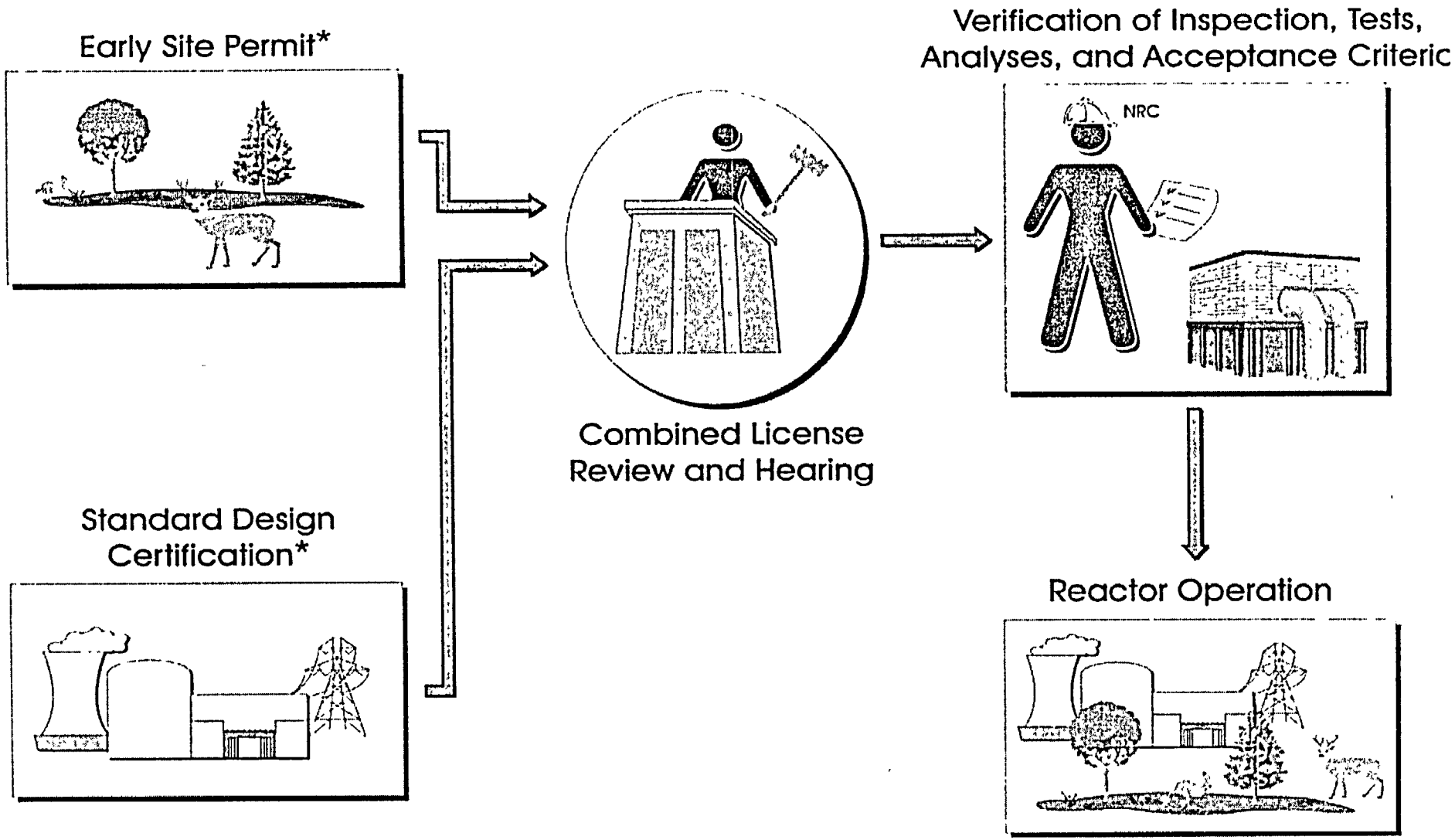

or equivalent process

Why does an Applicant Want an ESP?

- Reduce licensing uncertainty
- Resolve siting issues resolved prior to construction
- Allow an applicant to "bank" a site
- Provide regulatory stability for next 10-20 years

Early Site Permit Review Process

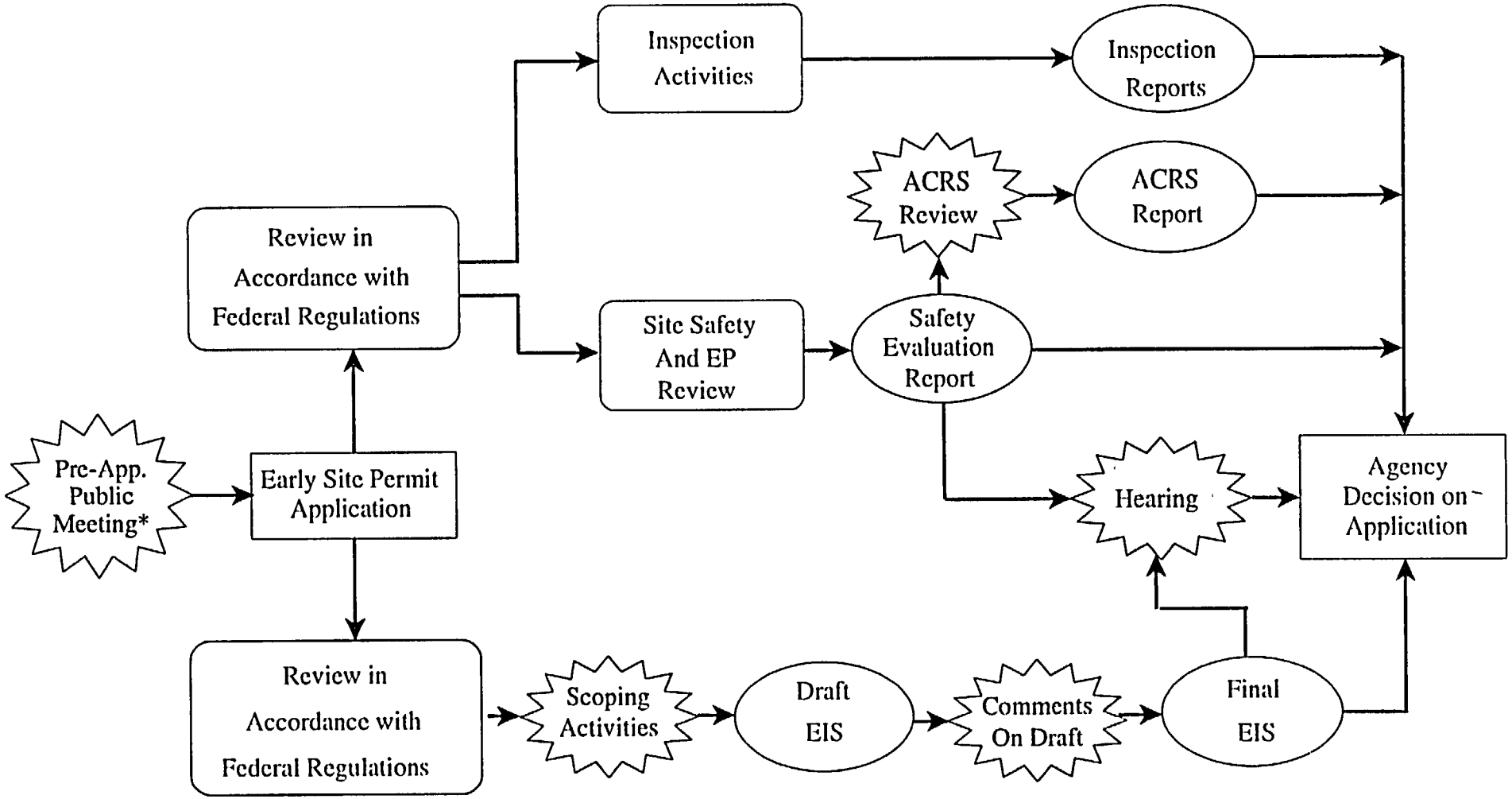

Formal Public Participation

* *Not required*

ESP Process

- Subpart A of 10 CFR Part 52 provides process for applicant considering construction of a nuclear power plant to resolve site issues separately from application for a combined license (COL)

ESP Process (Cont'd)

- Application contains:
  - Site description
  - Safety assessment, including analysis and evaluation of major structures, systems, and components of the facility that bear significantly on acceptability of the site under radiological consequence evaluation factors in 10 CFR 50.34(a)(1). Site characteristics must comply with 10 CFR Part 100

ESP Process (Cont'd)

- Application should describe:
  - Number of reactors, type, and thermal power level
  - Site boundaries and facility location on site
  - Maximum levels of radiological and thermal effluents
  - Type of cooling system
  - Seismic, meteorological, hydrologic, and geologic site characteristics
  - Nearby industrial, military, or transportation facilities
  - Existing and future population profile near site

ESP Process (Cont'd)

- Must include complete environmental report that focuses on operation of reactor(s) with characteristics that fall within postulated site parameters; need not assess benefits (including need for power) but must evaluate alternative sites for "obviously superior alternative"
- May choose to propose major features of emergency plans, or may propose complete and integrated emergency plans
- If desire to perform certain site preparation activities allowed by 10 CFR 50.10(e)(1), must submit redress plan for event power plant is not constructed

Recent History

- Three utilities have notified NRC of intent to submit ESP applications
  - Exelon (Clinton site) – June 03
  - Entergy (Grand Gulf site) – June 03
  - Dominion (North Anna site) – Sept 03
- Staff has been meeting with Nuclear Energy Institute (NEI) on monthly basis to identify, and make progress on resolving, licensing issues related to ESP
- Staff developing ESP RS to support review of these and any other ESP applications

Background on ESP Review Standard (RS)

- Purpose of ESP RS is to provide guidance to staff and information to stakeholders on review of a potential future ESP application
- Basic premise is that existing guidance is to be used to extent feasible
- Strive for consistency with draft power uprate RS and license renewal guidance

Document Development Approach

- Staff needs to develop guidance expeditiously given time frame expected for receipt of first ESP applications
- Presently finalizing draft ESP RS – objective is to produce best document possible for interim use, recognizing that open licensing issues related to ESP mean there will need to be changes and additions before document is finalized
- Sought and received input from affected branches in NRR and from NSIR
- New Reactor Licensing Project Office (NRLPO) has integrated staff inputs and developed draft document

Document Development Approach (Cont'd)

- Staff asked to review for applicability to ESP:
  - NUREG-0800 (1981) (Standard Review Plan, SRP)
  - NUREG-1555 (1999) (Environmental SRP)
  - Regulatory Guides
  - Information Notices
  - Generic Letters
  - Regulatory Issue Summaries
  - Any other documents of which staff is aware
- Primary review branches provided positions on applicable documents via memo to NRLPO

Standard Review Plan Markups

- Primary review branch asked to mark up assigned sections of NUREG-0800 and NUREG-1555 to achieve two results:
  - Strike out text not applicable to ESP to clearly show what is needed and what is not at ESP stage
  - Revise (using highlight and strikeout) existing guidance to bring portions of sections applicable to ESP up to date

Results of Staff Markups

- Most applicable sections of NUREG-0800 are in chapter 2 (Site Characteristics)
- Additional sections:
  - QA
  - Security
  - Site missiles and aircraft hazards
  - Radiation protection (for site workers when collocated with existing reactor)
  - Emergency planning
  - Accident analysis

Results of Staff Markups (Continued)

- Markups made on all "old" NUREG-0800 sections (most of which date to 1981)
- Rewrite needed for Chapter 15 guidance to define how to perform accident analyses using bounding design basis accidents – to be completed before final issue of RS
- No guidance in NUREG-0800 for security determination at ESP stage – RS states that security requirements are changing and that staff will provide guidance (e.g., guidance resulting from SECY paper NRLPO is currently working)
- Few changes needed to NUREG-1555, which is much more recent than most of NUREG-0800 and contains specific references to ESP

RS Document Contents

- ESP review process guidance
- Process Flow Chart
- "Applicability Table" for Safety Evaluation
- "Applicability Table" for Environmental Impact Statement
- Boilerplate Safety Evaluation Report template
- NUREG-0800/1555 section markups

Extract From Applicability Tables

Early Site Permit
Scope and Associated Review Criteria for Site Safety Assessment
Primary Source of Review Guidance: NUREG-0800, "Standard Review Plan for the Review of Safety Analysis Reports for Nuclear Power Plants (1981)"

Area of Review	Primary Review Branch	Secondary Review Branch	SRP Section	SRP Markup attached?	Boilerplate Safety Evaluation Section	Comment / Additional Guidance
Primary Review Branch SPSB						
Site Location and Description	SPSB	None	2 1.1	Yes	2 1 1	
Exclusion Area Authority and Control	SPSB	None	2 1 2	Yes	2.1 2	
Population Distribution	SPSB	IEHB	2 1.3	Yes	2.1.3	
Identification of Potential Hazards in Site Vicinity	SPSB	None	2.2.1 2.2 2	Yes	2 2 1	
Evaluation of Potential Accidents	SPSB	None	2 2.3	Yes	2 2 3	
Regional Climatology	SPSB	None	2 3.1	Yes	2 3 1	
Local Meteorology	SPSB	None	2 3 2	Yes	2 3 2	
Onsite Meteorological Measurements Programs	SPSB	None	2 3 3	Yes	2 3 3	
Short-term Dispersion Estimates for Accidental Atmospheric Releases	SPSB	None	2 3 4	Yes	2 3 4	
Long-Term Diffusion Estimates	SPSB	IEHB	2 3 5	Yes	2 3 5	
Aircraft Hazards	SPSB	None	3 5.1 6	Yes	2 2 1 2 2 2	Note 1

NOTE 1. Topics that are the subjects of these SRP sections are combined in the boilerplate SE with other topics as indicated

Extract from Typical NUREG-0800 Markup

3.5.1.6 AIRCRAFT HAZARDS

REVIEW RESPONSIBILITIES

Primary - ~~Siting Analysis Branch (SAB)~~ Probabilistic Safety Assessment Branch (SPSB)

Secondary - None

I. AREAS OF REVIEW

The staff reviews the applicant's assessment of aircraft hazards. The purpose of the review is to ~~assure~~ensure that the risks due to aircraft hazards are sufficiently low. Probabilistic considerations may be used to demonstrate that aircraft hazards need not be a design basis concern. Otherwise, a design basis aircraft event, involving potential effects of aircraft impacts and fires, is identified for consideration with respect to a nuclear power plant that might be constructed and operated on the site. ~~identification is made and the applicant's plant design is evaluated to assure that it is protected against the potential effects of aircraft impacts and fires.~~

The ~~SAB~~SPSB reviews the applicant's assessment of aircraft hazards to the plant and determines whether or not they should be identified as design basis events for a plant that might be constructed and operated on the proposed

Next Steps for ESP RS

- RS document in staff concurrence
- Goal: Issue for interim use and public comment by end of 2002
- Plan to provide RS to ACRS for review after addressing public comments
- After receiving comments, goal is to issue final ESP RS by end of 2003

Next Steps for ESP Process

- Issue RS to better inform stakeholders
- Complete applicant-specific pre-application activities (e.g., public meetings, site visits, QA reviews)
- Resolve generic licensing issues with NEI ESP Task Force
  - Plant parameter envelope (PPE) approach
  - Seismic evaluation methodology
  - Alternative site reviews under the National Environmental Policy Act
- Complete internal preparations (e.g., resource planning) to enable review of ESP applications on schedule

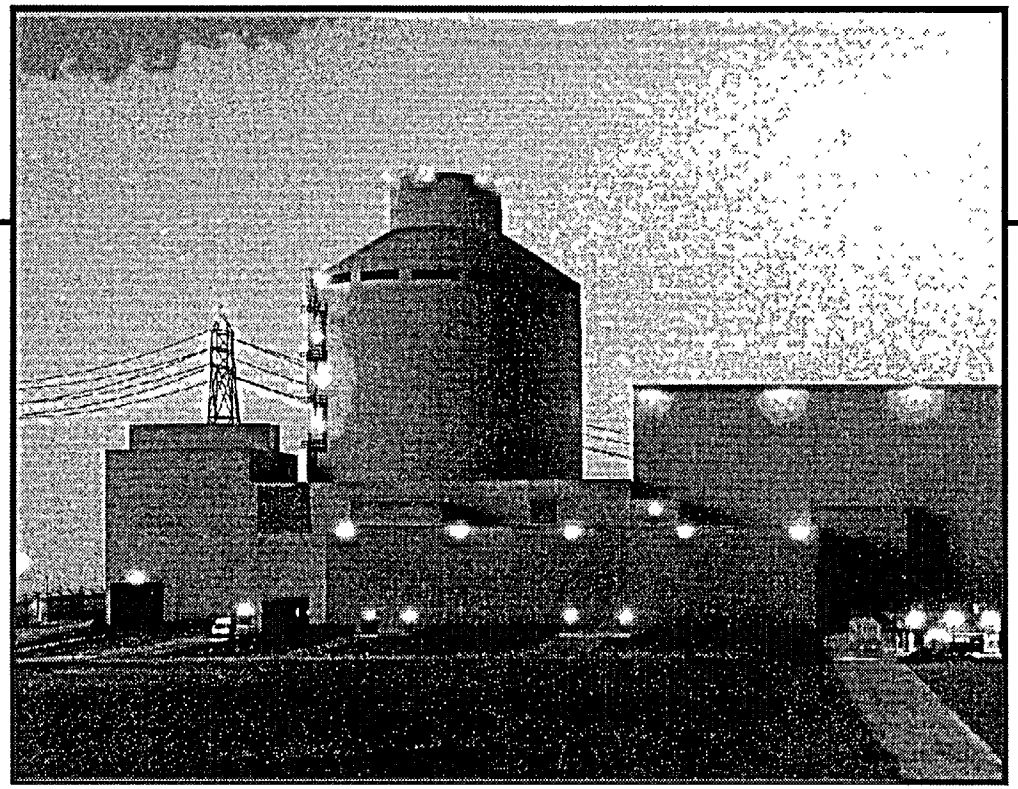

AP1000 Design Certification Review

Westinghouse Electric Company

Presentation to

Advisory Committee on Reactor Safeguards

November 7, 2002

Agenda

- **AP1000 Design Certification**
  - Background / Scope of Application
  - Summary of Pre-Certification Review
  - Design Certification Schedule
- **Overview of AP1000 Design**
- **Summary of AP1000 PRA**
- **ACRS Future Meetings**

AP1000 Design Certification Status

Mike Corletti
Deputy Project Manager, AP600 & AP1000 Projects
412-374-5355 - corletmm@westinghouse.com

AP600 Background

- **Design Maturity**
  - 1300 man-year design and testing effort
  - More than 12,000 design documents completed
  - 3D plant computer model developed
    - Includes structures, equipment, small / large pipe, cable trays, ducts ...
  - 60-70% Design complete with credible Cost Estimate & Construction Schedule
  - Detailed Bill of Materials developed
- **Licensing Maturity**
  - Completed NRC technical review of AP600
    - 110 man-year effort (NRC) over 6 years
    - Independent, confirmatory plant testing (ROSA, OSU)
    - 7400+ questions answered, no open items
    - 380+ meeting with NRC, 43 meetings with ACRS
  - NRC Design Certification issued 12/99
- **Meets Utility Requirements Document**

AP600 to AP1000 Design Changes

- Increase Core Length & Number of Assemblies
- Increase Size of Key NSSS Components
  - Increased height of Reactor Vessel
  - Steam Generators (Δ125, similar to ANO replacement)
  - Larger canned RCPs (variable speed controller)
  - Larger Pressurizer
- Increase Containment Height
- Increase Capacity of Passive Safety System Components
- Turbine Island Capacity Increased for Power Rating

Retained AP600 Nuclear Island Footprint

AP1000 General Arrangement

Plan at Elevation 135'

AP600

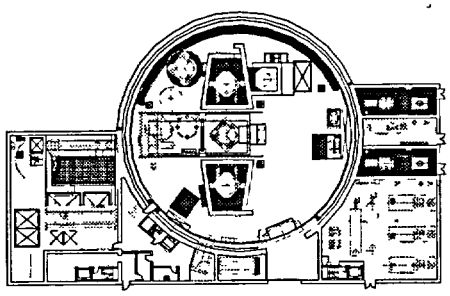

AP1000

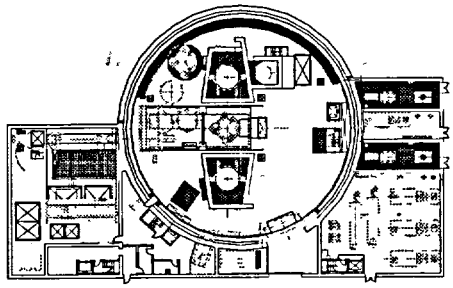

AP1000 General Arrangement

Containment Section View

AP600

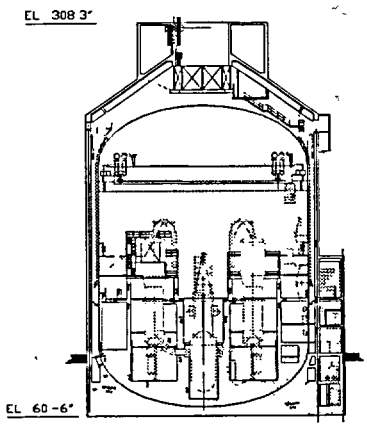

AP1000

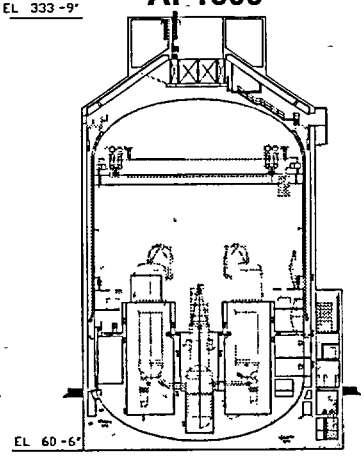

Phased Approach to AP1000 Licensing

- **Phase 1 (complete)**
  - Establish goals and estimate for Prelicensing Review
  - Westinghouse prepare submittals to support goals
- **Phase 2 (complete)**
  - NRC perform Pre-Certification Review
  - NRC estimate Cost and Schedule for AP1000 Design Certification
  - Westinghouse develop Safety Analysis Report
- **Phase 3 (in progress)**
  - NRC perform Design Certification Review

AP1000 Design Certification Application

Submitted March 28, 2002

- **AP1000 Design Control Document (DCD)**
  - Tier 1 Information
    - Inspections, Tests, Analysis and Acceptance Criteria (ITAAC)
  - Tier 2 - Information
    - Standard Safety Analysis Report
    - Technical Specifications
    - PRA Insights
- **AP1000 PRA Report submitted with application**
- **20 AP1000 Topical Reports have been submitted in support of Design Certification**

AP1000 Design Certification Review-

- **AP1000 Licensing Benefits from AP600 Review**
  - Follow AP600 Precedents - No New Policy Issues
- **"80%" of AP1000 DCD Same as Approved AP600 DCD**
  - Redline/Strikeout Version of DCD Provided to NRC

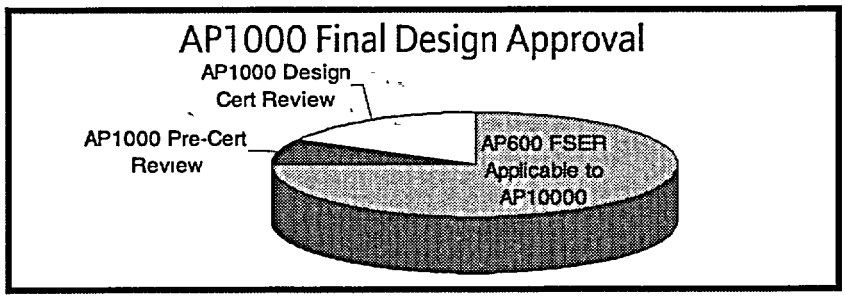

Results of Pre-Certification Review (Phase 2)

- **SECY-02-0059**
  - Design Acceptance Criteria can be used for AP1000
    - Piping DAC approach is acceptable
      - DAC specifics will be performed as part of Design Certification
    - Structural Design will not use DAC
      - Structural design of nuclear island critical sections is performed
        - » Same approach as AP600
- **March 25th Letter to Westinghouse on Remaining Issues**
  - AP600 tests are applicable to AP1000
  - AP600 analysis codes validated to these tests can also be used for AP1000
    - Treatment of entrainment phenomenon in the upper plenum / hot leg in SBLOCA analysis will be addressed in Design Certification review
- **ACRS Letter Endorsing AP1000 Conclusions**

Resolution of Open Items from Pre-Certification Review

- **Safety Analysis Codes**
  - Pre-Certification Review Determined Applicability to AP1000 of Safety Analysis Codes Approved for AP600
    - LOFTRAN
    - NOTRUMP
    - WCOBRA/TRAC
    - WGOTHIC
  - Several open items / resolution paths identified for each code
  - Open items are being addressed in RAI responses

Resolution of Open Items from Pre-Certification Review

- **Treatment of upper plenum and hot leg entrainment for SB LOCA**
  - WCAP-15833 Rev 1 "WCOBRA/TRAC AP1000 ADS4/IRWST Phase Modeling"
    - Sophisticated analysis tool developed to assess importance of phenomenon not explicitly modeled in NOTRUMP
      - Momentum flux
      - Upper plenum and hot leg entrainment
      - Code validated against test data
    - Sensitivity studies performed to demonstrate importance of entrainment
      - Variations in upper plenum noding
      - Variations in upper plenum entrainment rate
      - Variations in interfacial drag in upper plenum
      - Variations of coefficients governing inception of hot leg entrainment
      - Comparisons of WCOBRA-TRAC entrainment calculations to Kataoka-Ishii pool entrainment model
    - Results indicate AP1000 SBLOCA performance not sensitive to variations in upper plenum and hot leg entrainment
      - No core uncovery for spectrum of sensitivity studies
      - Small changes in predicted minimum system inventory
  - Future interactions with staff planned to resolve technical issue

Design Certification Schedule

Near-Term Milestones

3/28/2002	W Submits Application for Design Certification
5/1/2002	W Kick-off PRA Review Meeting
5/9/2002	W Kick-off DCD Review Meeting
5/30/2002	W Submits Supplemental Topical Reports
6/25/2002	NRC Dockets Application
9/30/2002	NRC provides Requests for Additional Information (RAI) to W 700 RAI issued W has provided responses to 440 RAI
12/2/2002	W Issues final RAI responses

- Design Information Provided to Staff for Confirmatory Analysis
- Piping Audit Held at Westinghouse Offices in September
- Seismic Audit at Westinghouse Offices in November

Proposed Design Certification Schedule

Future Milestones

	NRC Letter	W Target
1. W Submits Responses to All RAI	12/2/02	12/2/02
2. NRC Perform Audits as Necessary	1Q2003	
3. NRC Identify Potential DSER Open Items		2/28/03
4. W Addresses Potential DSER Open Items		4/15/03
5. NRC Issues DSER	6/16/03	6/16/03
DSER OPEN ITEM RESOLUTION DELAYS SCHEDULE 1 YEAR		
IF NO DSER OPEN ITEMS, THEN DSER TRANSITIONS TO FSER		
6. ACRS Full Committee & Letter	8/2004	8/2003
7. NRC Issue FSER	9/13/04	9/15/03
9. NRC Issue FDA	10/25/04	10/24/03

Future ACRS Interactions

- **Timely ACRS review of AP1000 issues required to meet Westinghouse Target Schedule**
  - Treatment of entrainment
  - AP1000 PRA
  - Other topics for discussion

AP1000 Overview

Terry Schulz
Advisory Engineer, Passive Plant Engineering
412-374-5120 - schulztl@westinghouse.com

AP1000 Design Features

- **Integrated Power Plant Design**
- **Proven Power Producing Components (Reactor, Fuel, ...)**
- **Simplified RCS Loops with Canned Motor Pumps**
- **Simplified Passive Safety Systems**
  - Increase safety margins and address severe accidents
- **Simplified Nonsafety Systems**
- **Microprocessor, Digital Technology Based I&C**
- **Compact Control Room, Electronic Operator Interface**
- **Optimized Plant Arrangement**
  - Construction, Operation, Maintenance, Safety, Cost
- **Extensive Use of Modular Construction**

AP600 to AP1000 Design Changes

- **Increase Core Length & Number of Assemblies**
- **Increase Size of Key NSSS Components**
  - Increased height of Reactor Vessel
  - Larger Steam Generators (similar to W/CE SGs)
  - Larger canned RCPs (variable speed controller)
  - Larger Pressurizer
- **Increase Containment Height & Design Pressure**
- **Increase Capacity of Passive Safety System Components**
  - Retain / increase safety margin for low differential pressure features
- **Turbine Island Capacity Increased for Power Rating**

Retains Nuclear Island Footprint

Comparison of Selected Parameters

PARAMETER	Doel 4/Tihange 3	AP600	AP1000
Net Electric Output, MWe	985	610	1117
Reactor Power, MWt	2988	1933	3400
Hot Leg Temperature, °F	626	600	610
Number of Fuel Assemblies	157	145	157
Type of Fuel Assembly	17x17	17x17	17x17
Active Fuel Length, ft	14	12	14
Linear Hear Rating, kw.ft	5 02	4.10	5.71
Control Rods / Gray Rods	52 / 0	45 / 16	53 / 16
R/V I.D., inches	157	157	157
Vessel flow (Thermal Design)	295,500	194,200	300,000
Steam Generator Surface Area, total ft^2	204,000	150,000	250,000
Pressurizer Volume, ft^3	1400	1600	2100

BNFL Slide 20 Westinghouse

AP1000 Major Components

- **Fuel, Internals, Reactor Vessel**
  - Similar to Doel 4, Tihange 3, S. Texas
  - No bottom-mounted instrumentation
  - Improved materials - 60 yr life
- **Steam Generators**
  - Same design features as AP600, larger
    - Similar to W / CE SGs in operation, System 80, ANO replacement SGs
- **Canned Motor RC Pumps**
  - Similar to AP600, larger
  - Used in Naval reactors, early commercial reactors
- **Simplified Main Loop**
  - Same as AP600
  - Reduces welds 50%, supports 80%
- **Pressurizer**
  - 50% larger than operating plants

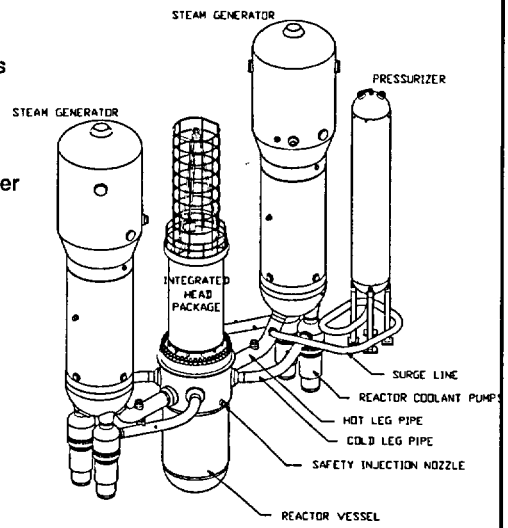

BNFL Slide 21 Westinghouse

AP1000 Core Design

- **AP1000 Core Design Features**
  - 17x17 Performance+ Fuel
    - 12 more, 14' long fuel assemblies
    - Same as W 3XL plants
  - Higher power density than AP600
    - Similar to many W 3L plants
  - Low boron core design
    - Meets EUR requirement
    - Improves ATWS and boron dilution
  - 18 month cycles
  - Increased shutdown margin vs AP600
  - Gray rods for load follow

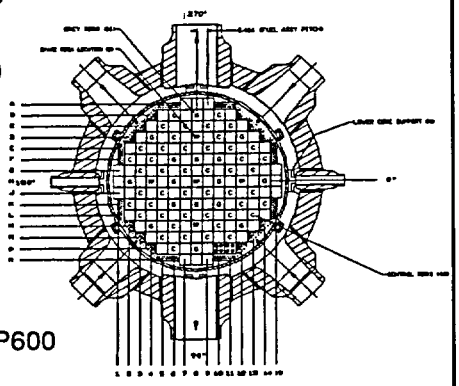

AP1000 Reactor Vessel

- **West. 3 Loop Reactor**
  - 157" ID, 157 fuel assemblies
    - Same RV as AP600 + 19.7" length
  - Ring forged construction
    - No welds in core region
  - Improved materials permit 60 yr design life
  - W-CE type Core Shroud
    - Replaces radial reflector
    - All-welded design
  - Top mounted incore I&C
    - Fixed position, online readout
    - No penetrations below top fuel

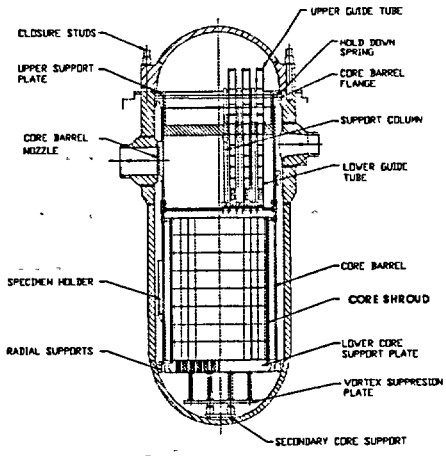

AP1000 Core Barrel

- **AP600 Utilizes Radial Reflector**
  - Based on earlier APWR design
  - Improves fuel economy / vessel life
- **AP1000 Utilizes W/CE Core Shroud**
  - Radial reflector challenged by addition of 12 fuel assemblies
  - Proven design used on many W-Windsor plants
    - All welded - no bolts
  - Simplification

YGN-5 Core Shroud

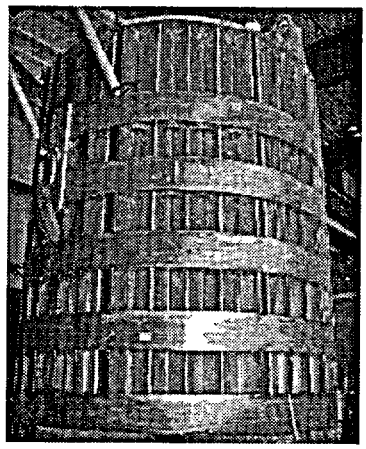

BNFL Slide 24 Westinghouse

AP1000 Steam Generator

- Based on Proven W Designs
  - Uses AP600 (Delta 75) design features
    - Inconel 690 TT tubes
    - Stainless steel support plates
    - Improved access
  - Larger size bounded by W-CE experience
    - Very similar to ANO replacement SG (below)
  - Excellent operating experience
  - Over 1200 SG years of operation
  - Less than 0.1% total tubes plugged

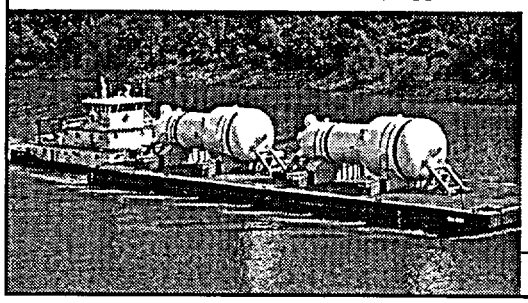

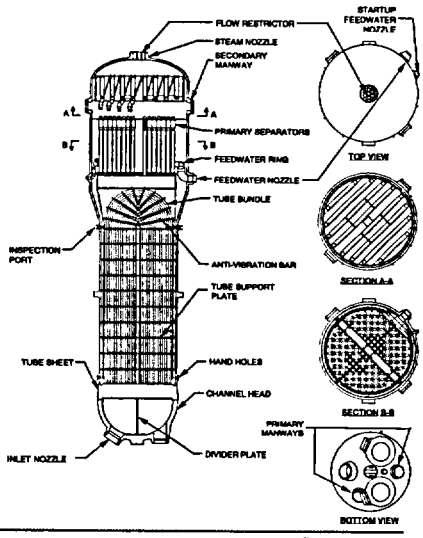

Westinghouse

AP1000 Reactor Coolant Pump

- **Based on Field-Proven, Canned Motor Pumps**
  - 1300 units in service
  - 12-year mean time between repair
  - No shaft seals - no seal failures
  - Water lubricated bearings - no oil
  - Larger compact, high inertia flywheel
  - Increased pump head / flow
    - Pump power minimized by use of frequency control during shutdowns
  - AP600 pump tests performed
    - Full size test of compact flywheel
    - Scaled hydraulics tests
    - Air-mixing tests of SG / RCP connection

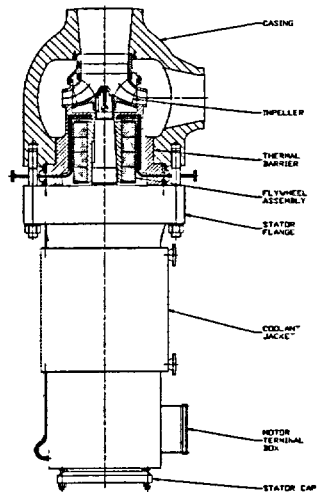

Canned Motor Reactor Coolant Pump

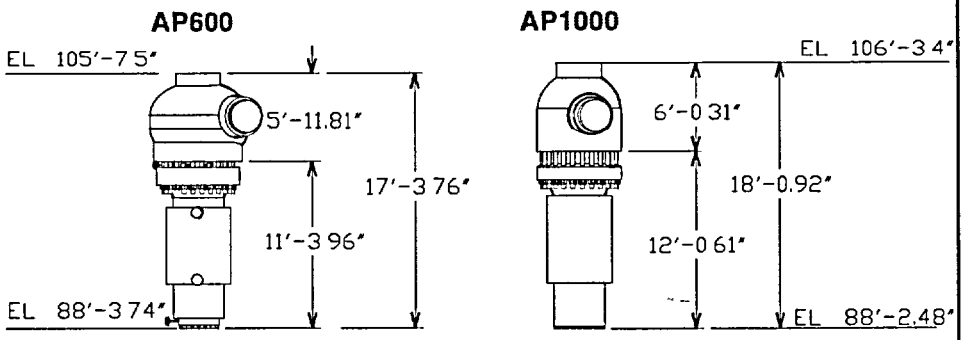

Parameter	AP600	AP1000
Design Flow, gpm	51,000	78,750
Design Head, ft	240	365
Rotating Inertia, lb-ft^2	5,000	16,500
Motor Rating, Hp	3200	7000

Large Pressurizer Eliminates Need for PORV and Improves Transient Response

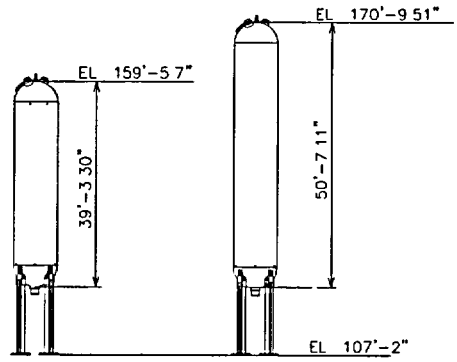

AP600
1600 ft3

AP1000
2100 ft3

AP1000 Reactor Coolant System

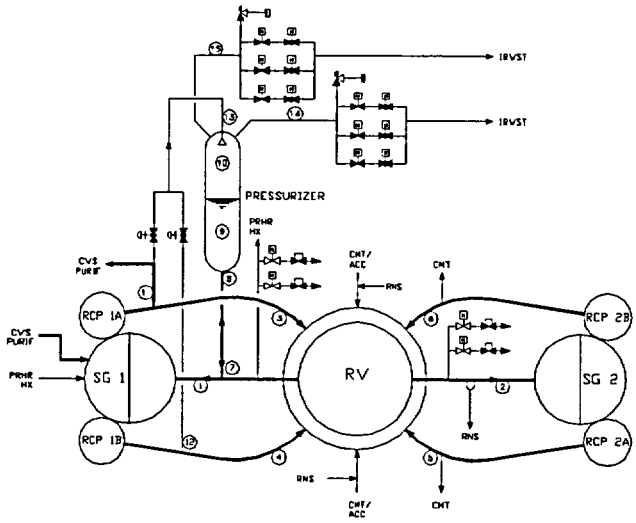

AP1000 Approach to Safety

- **Passive Safety-Related Systems**
  - Use "passive" process only, no active pumps, diesels, ...
    - One time alignment of valves
    - No support systems required after actuation
      - No AC power, cooling water, HVAC, I&C
  - Greatly reduced dependency on operator actions
  - Mitigate design basis accidents without nonsafety systems
  - Meet NRC PRA safety goals without use of nonsafety systems
- **Active Nonsafety-Related Systems**
  - Reliably support normal operation
    - Redundant equipment powered by onsite diesels
  - Minimize challenges to passive safety systems
  - Not required to mitigate design basis accidents

Passive Safety Systems

- **Passive Safety System Functions**
  - Dedicated safety systems, not used for normal operation
  - Mitigate design basis accidents without nonsafety systems
  - Meet NRC safety goals without use of nonsafety systems
- **Passive Safety System Design Features**
  - Only passive processes; no active pumps, diesels, fans, ...
  - DBA considerations; margin, single failure
  - PRA considerations; reliability, common mode failures
  - Reduced dependency on operator actions
- **Passive Safety System Equipment Design**
  - Reliable, experienced based, nuclear grade equipment
  - ASME, seismic I, fire / flood / wind protection
  - Availability controlled by Tech Spec with shutdown requirements
  - Reliability controlled by ISI / IST and maintenance program

AP1000 Passive Core Cooling System

- **AP600 System Configuration Retained**
- **Capacities Increased to Accommodate Higher Power**
  - Core 1933 MW > 3400 MW or 76%
  - PRHR HX Capacity Increased 72%
  - CMT Volume & Flow Increased 25%
  - ADS 4 Flow Increased 93%
  - IRWST Injection Increased 89%
  - Cont. Recirc. Increased 139%
- **System Performance Maintained**
  - No core uncovery for SBLOCA
    - ≤ DVI line break
    - Large margin to PCT limit
  - No operator actions required for SGTR

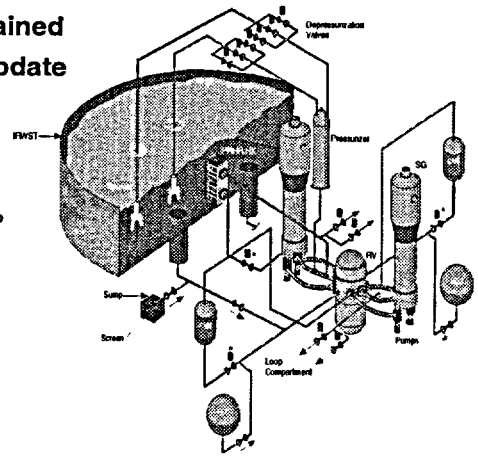

Passive Decay Heat Removal

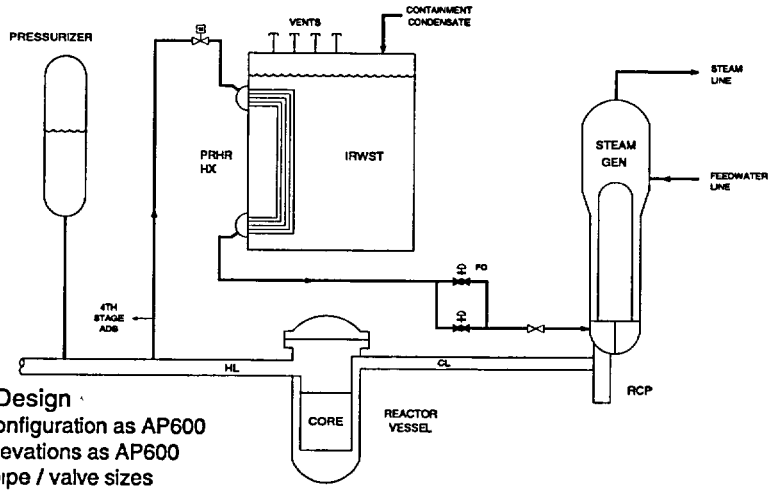

- PRHR HX Design
  - Same configuration as AP600
  - Same elevations as AP600
  - Larger pipe / valve sizes
  - Increased HX surface (more tubes / longer horizontal section)

PRHR Equipment Layout

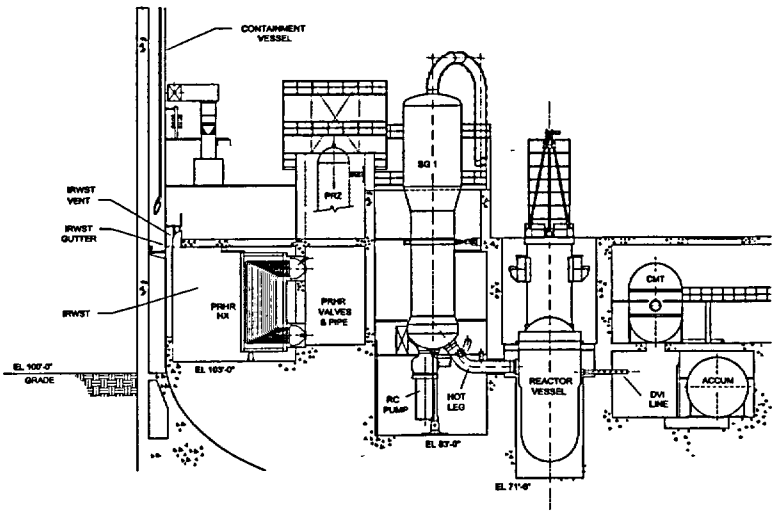

Loss Main Feedwater Analysis

- **PRHR Provides Effective Core Cooling**
  - RC pumps operate until trip on low Tc (~1167 sec)
  - PRHR HX operates with forced then natural circ.
  - Large subcooling & Pzr level margin provided

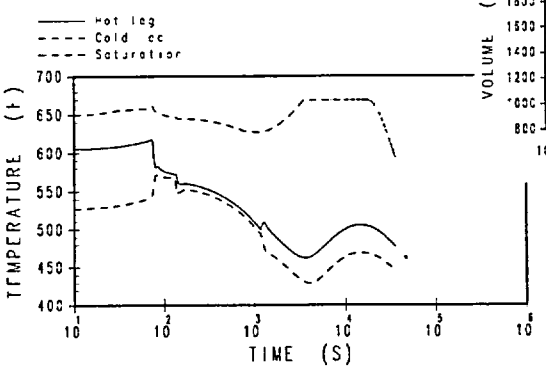

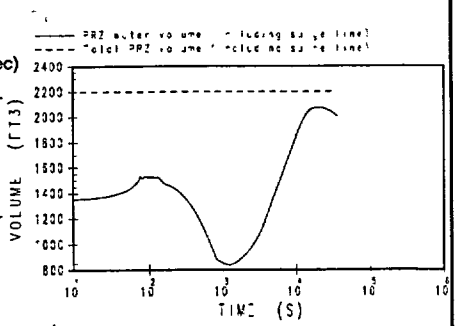

Loss AC Power Analysis

- **PRHR Provides Effective Core Cooling**
  - Main feedwater lost as initiating event
  - Offsite power lost at time of reactor trip
  - PRHR HX operates with natural circulation
  - Large subcooling & Pzr level margin provided

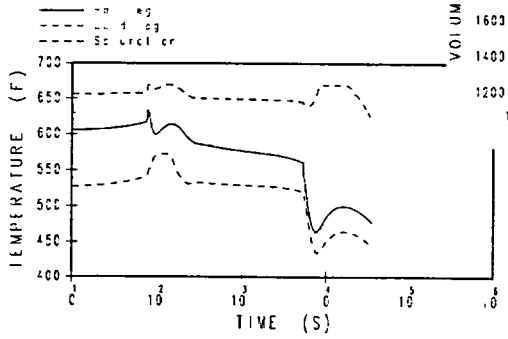

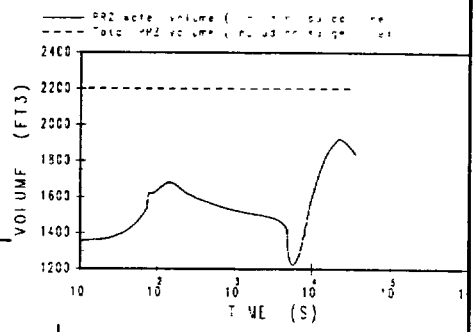

SGTR Analysis

- **PXS Automatically Terminates SG Tube Rupture Leak**
  - PRHR HX operation cools RCS to less than SG temperature
  - CMTs provide RCS makeup
  - Protection I&C isolates CVS makeup & SFWS on high SG level
  - SG overfill is automatically prevented

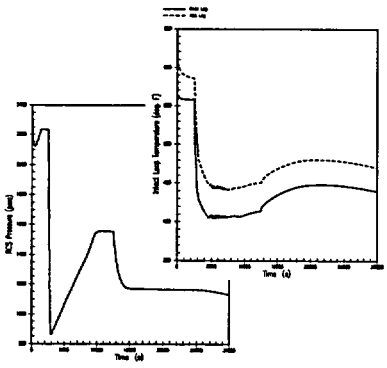

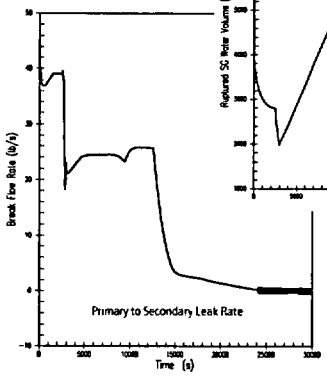

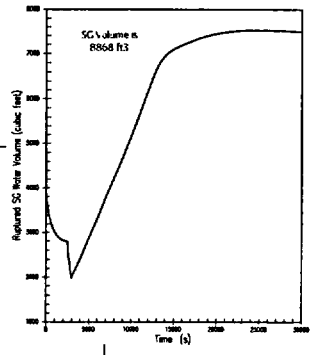

AP1000 Passive Safety Injection

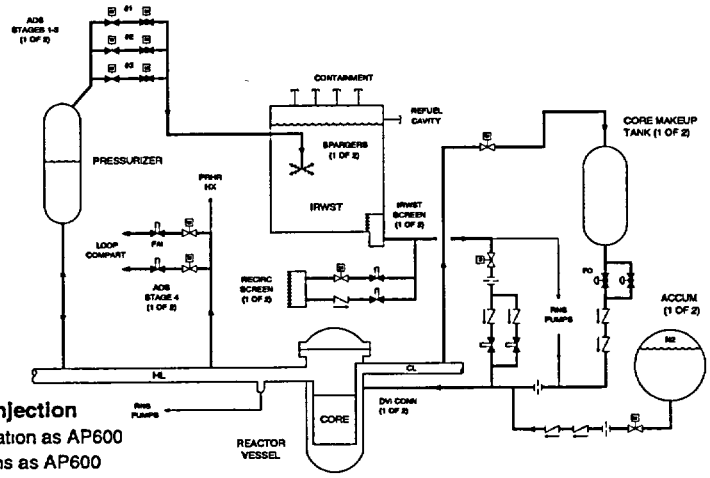

- **Passive Safety Injection**
  - Same configuration as AP600
  - Same elevations as AP600
  - Larger CMT and CMT flow tuning orifice
  - Larger IRWST, Recirc, ADS 4 pipe sizes

AP1000 Accumulator

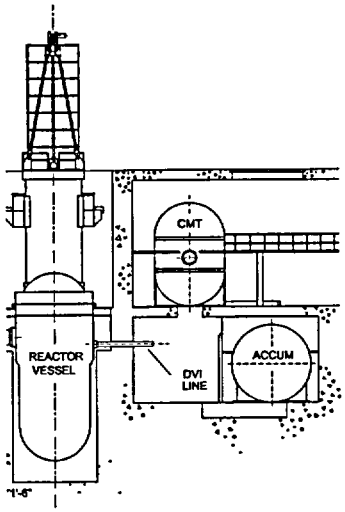

- **Accumulator Volume / Flow Not Changed**
  - Controlling accident is Large LOCA
  - Increasing Accum volume is difficult
    - Would impact containment layout
- **AP1000 Large LOCA PCT**
  - 2124 F for DBA Large CL LOCA
    - Including uncertainties
  - For PRA, change success criteria
    - Separate large RCS pipe breaks and spurious ADS stage 4 large LOCAs
      - ADS-4 is HL break, 1 / 2 accum OK
      - Large CL breaks require 2 / 2 accum
        - » Reduce frequency based on LBB

AP1000 Core Makeup Tanks

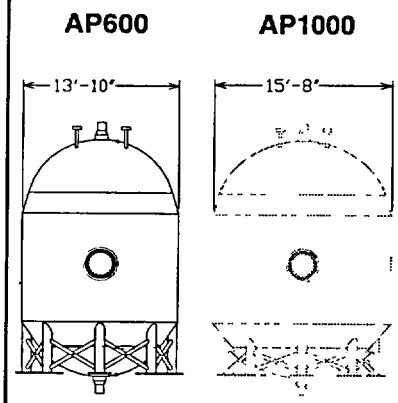

- **Core Makeup Tank Volume & Flow Increased by 25%**
  - Volume is 2500 ft3 (AP600 2000 ft3)
  - Re-tuned flow control orifice with same pipe size
    - Maintains duration of CMT injection same as AP600
    - Maintains time available for ADS to depressurize RCS to IRWST cut-in
- **AP1000 CMT Has Sufficient Capability to Mitigate Small LOCA's**
  - No core uncovery for DBA Sm LOCA
    - ≤ DVI LOCA
  - Required for PRA success criteria, multiple failure accidents w/o accum

AP1000 IRWST Injection

- **AP1000 IRWST Injection Capacity Increased**
  - Pipe and valves increased to 8/10" (AP600 has 6/8")
    - Eliminated flow tuning balancing orifices
  - Initial IRWST water level increased
    - Added narrow range level sensors to reduce error
  - Flow capacity increased 89%

AP1000 ADS

- **ADS Stages 1,2,3 Not Changed**
  - Not important for final RCS depressurization to IRWST Injection and Containment Recirc
  - Maintains ADS 1,2,3 piping layout / design, sparger design and IRWST T&H loads
- **ADS Stage 4 Increased**
  - Very important for final RCS depressurization to IRWST / Cont Recirc
  - ADS 4 valves / pipe increased to 14" (AP600 has 10")
    - Common pipe increased to 18" (AP600 has 12")
  - Critical flow area increases 76%
  - Subcritical flow increases 93%

DVI LOCA Analysis

- **PXS Provides Effective Core Cooling**
  - CMTs, accum and IRWST provide injection
    - 1/2 CMT, Accum, IRWST line spill to contain
  - ADS effectively reduces the RCS pressure
  - Core remains covered with significant margin

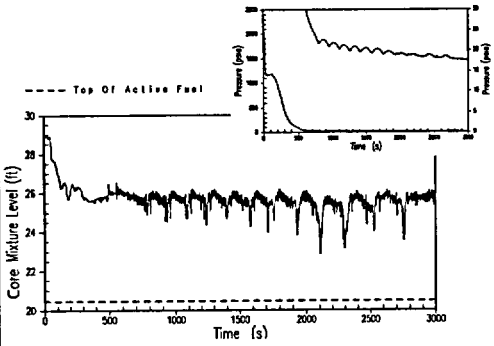

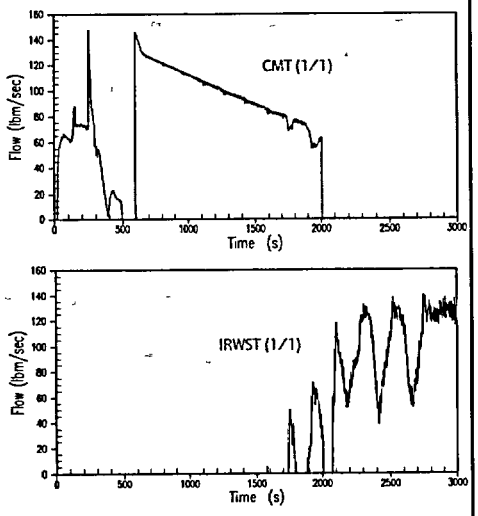

Spurious ADS LOCA Analysis

- **PXS Provides Effective Core Cooling**
  - CMTs, accum and IRWST provide injection
  - ADS effectively reduces the RCS pressure
  - Core remains covered with significant margin

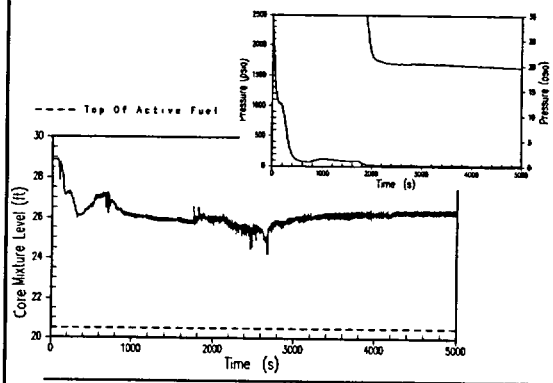

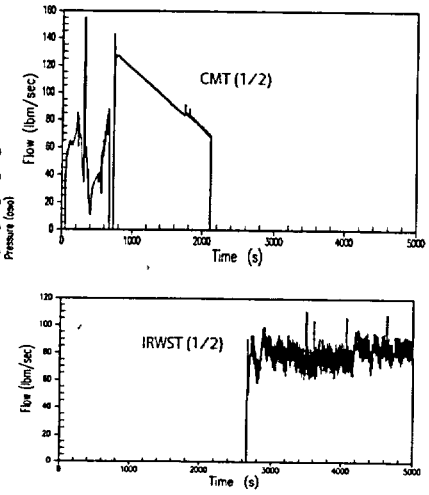

BNFL Slide 44 Westinghouse

2" Cold Leg LOCA Analysis

- **PXS Provides Effective Core Cooling**
  - CMTs, accum and IRWST provide injection
  - ADS effectively reduces the RCS pressure
  - Core remains covered with significant margin

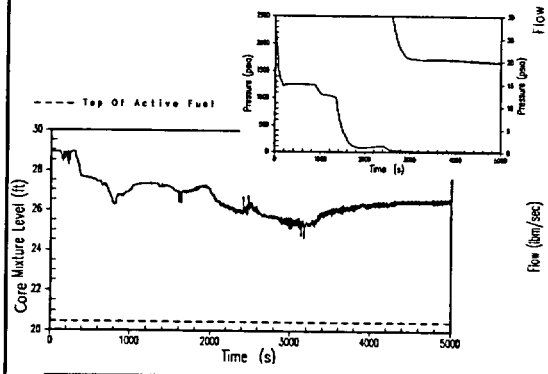

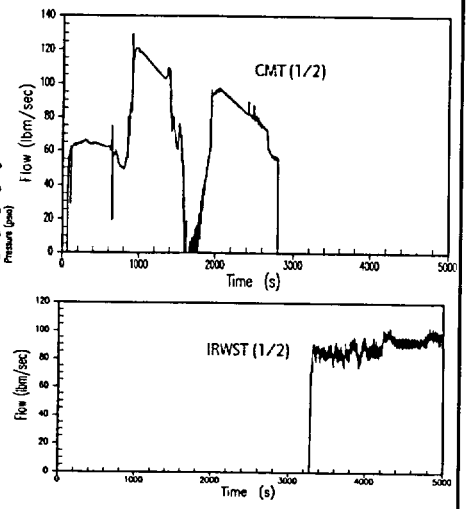

BNFL Slide 45 Westinghouse

AP1000 Containment Recirculation

- **AP1000 Cont. Recirc. Capacity Increased**
  - Pipe and valves increased to 8" (AP600 has 6/8")
  - Containment post ADS water elevation increased
    - DVI LOCA min flood elevation is 108.05' (AP600 is 106.2')
      - PXS curbs raised to 110 17' (AP600 is 108.17')
    - Initial IRWST level increased
    - Initial flooding of refueling cavity prevented
      - Check valves added to drain line
    - RNS suction from outside containment
      - Injection suction from Spent Fuel cask loading pit
      - Prevents RNS operation from reducing time for recirc start
        - » RNS doesn't pump down IRWST during DVI LOCA
  - Flow capacity increased 139%

AP1000 Containment Recirculation

- **PRA Based Changes**
  - Recirc MOVs made normally open
    - Improves opening reliability
      - Fewer valves need to open
      - Squibs more reliable than MOVs
  - Containment Recirc squib diversity
    - AP1000 applies diversity between Cont Recirc paths
      - Recirc paths with MOVs use low pres squib (150 psig)
      - Recirc paths with check valves use high pres squib (2500 psig)
        - » Same squib valve used in IRWST injection lines
      - Improves reliability of Cont Recirc and drain for IVR support

LOCA Long Term Cooling

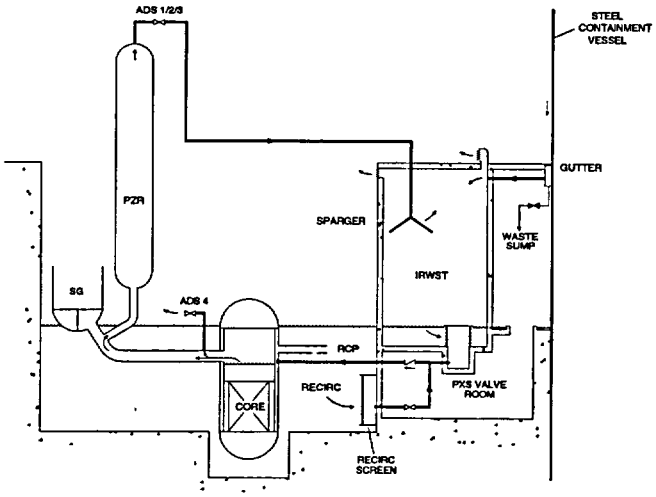

Long Term Cooling Analysis (DVI Case)

- **PXS Provides Effective Core Cooling**
  - IRWST provides injection until recirculation starts
    - One IRWST line injects, one spills through DVI break
  - Containment recirculation starts at 1.9 hr
  - ADS effectively reduces the RCS pressure
  - Core remains covered with significant margin
    - Indicated by HL level

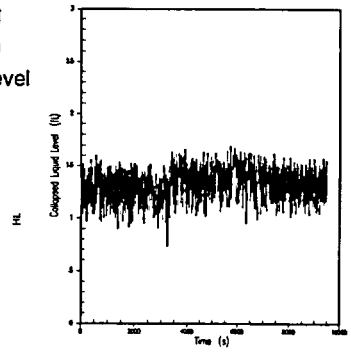

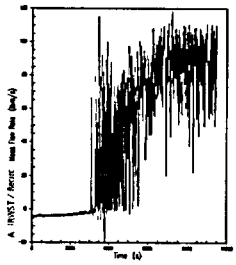

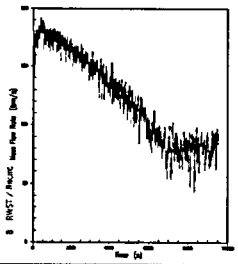

AP1000 Containment Comparison

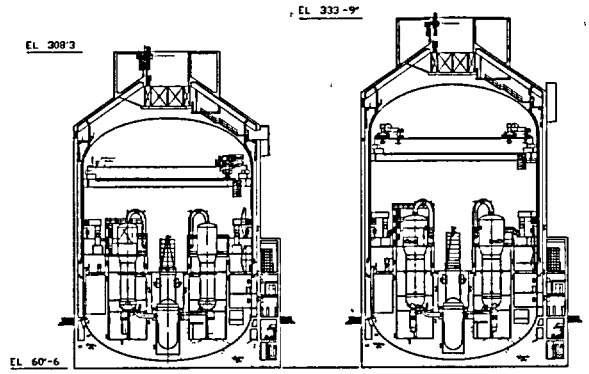

	AP600	AP1000
Total Free Volume	100%	122%
Design Pressure, psig	45	59
Shell Thickness	1 5/8"	1 3/4"
Matenal	A537 Class 2	SA738 Grade B

Passive Containment Cooling System

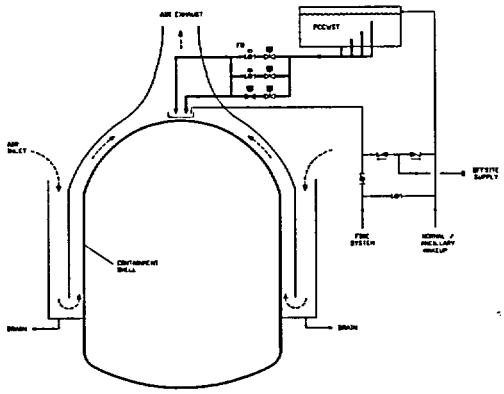

- **PCS Water Storage Tank**
  - Provides 72 hr drain
    - Afterwards use on/offsite water
    - Air only cooling prevents failure
  - Flow decreases with time
    - Uses 4 standpipes
- **PCS Flow Rates**
  - High initial flow
    - Rapidly forms water film
    - Effectively reduces cont pressure
  - Later flows match decay heat
- **3rd Diverse Drain Path Added**
  - Increases reliability of water drain
    - T&H uncertainty of containment cooling without water drain

AP1000 Containment Analysis Results

- AP1000 Containment Provides Increased Margins

	AP600	AP1000
– LLOCA	1 6	3 6
– MSLB	0 9	1.7

(Design - Peak pres (psi))

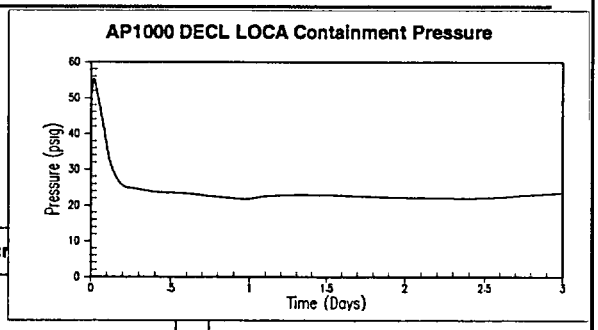

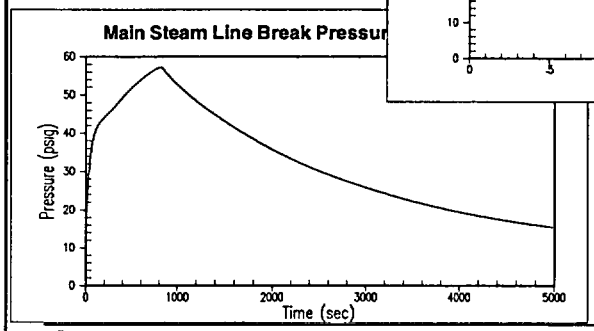

- Main Steam Line Break is Limiting
  - Not sensitive to passive containment cooling performance

AP1000 Safety Margins

	Typical Plant	AP600	AP1000
Loss Flow Margin to DNBR Limit	~ 1 – 5%	15.8%	~19%
Feedline Break Subcooling Margin	>0°F	~170°F	~140°F
SG Tube Rupture	Operator actions required in 10 min	Operator actions ***NOT*** required	Same as AP600
Small LOCA	3" LOCA core uncovers PCT ~1500 °F	≤ 8" LOCA ***NO*** core uncovery	Same as AP600
Large LOCA PCT (with uncertainty)	2000 – 2200°F	1676°F	2124°F

AP1000 Active Nonsafety Systems

- **Active Nonsafety System Functions**
  - Reliably support normal operation
  - Minimize challenge to passive safety systems
  - Not required to mitigate design basis accidents
  - Not required to meet NRC safety goals
- **Active Nonsafety System Design Features**
  - Simplified designs (fewer components, separation not required)
  - Redundancy for more probable failures
  - Automatic actuation with power from onsite diesels
- **Active Nonsafety System Equipment Design**
  - Reliable, experienced based, industrial grade equipment
  - Non-ASME, non-seismic, limited fire / flood / wind protection
  - Availability controlled by procedures, no shutdown requirements
  - Reliability controlled by maintenance program

AP1000 Startup Feedwater System

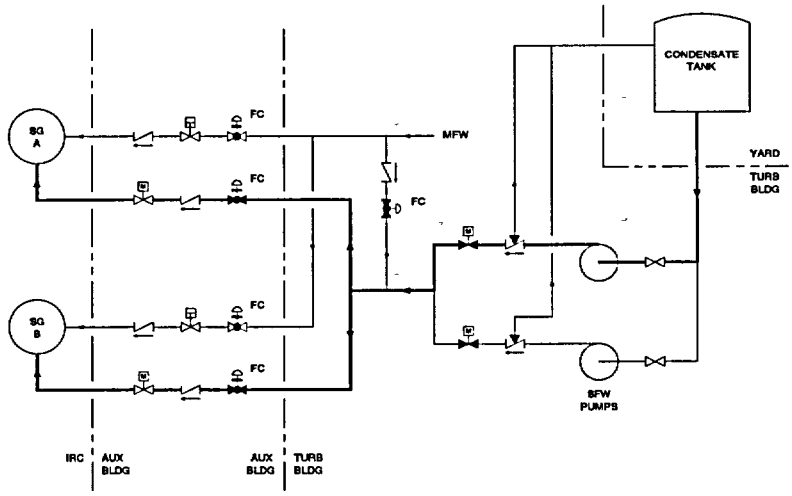

AP1000 I&C Systems

- **Control System**
  - Plant wide non-1E system for all normal displays & controls
  - Microprocessor / software based, multiplexed communications
- **Safety System**
  - Plant wide 1E system for all safety displays & controls
  - Microprocessor / software based, multiplexed communications
  - May use same hardware / software as Control I&C
- **Diverse System**
  - Limited scope non-1E system, PRA based displays & controls
    - Backs up Safety I&C where common mode failure a risk
  - Different microprocessor & software than Safety I&C
    - No multiplexing

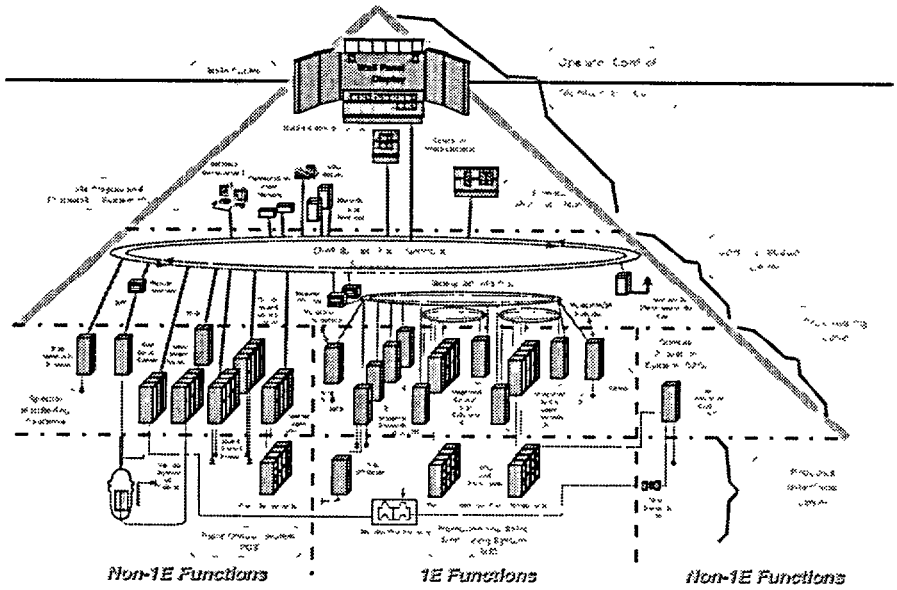

AP1000 Human-Machine Interface

- **Compact Control Room**
  - Designed for 1 Reactor Operator and 1 Supervisor
- **Displays**
  - Plant status / overview via wall panel (non 1E)
  - Detail display via workstation video displays (non 1E)
  - Small number dedicated displays; safety (1E) & diverse (non 1E)
- **Controls**
  - Soft controls (non 1E) for normal operation
  - Small number dedicated switches; safety (1E) & diverse (non 1E)
- **Advanced Alarm Management**
- **No Paper Procedures**

AP1000 Advanced Control Room

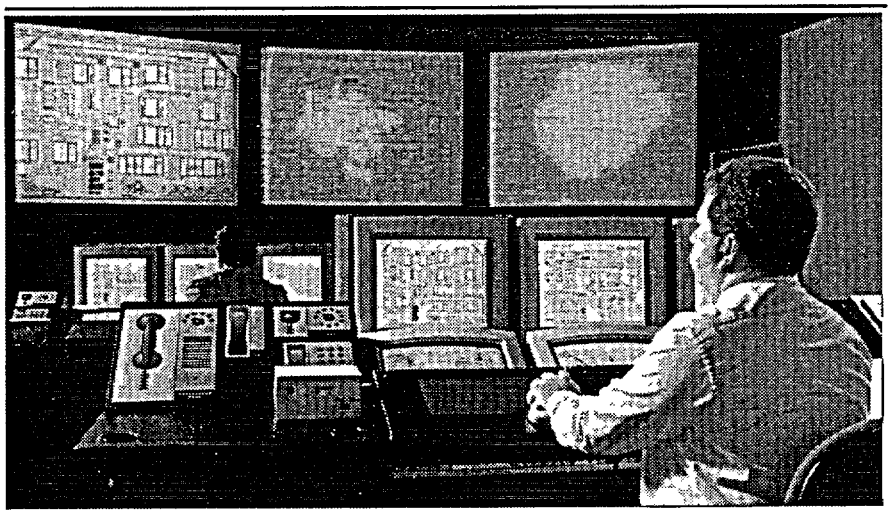

AP1000 General Arrangement

- **Improved Maintenance / Inspection**
  - Increased laydown area inside containment
  - Access platforms provided for equipment maintenance / inspection
- **Improved Access to Containment**
  - Equipment hatch(s) access from auxiliary building
  - Equipment hatches and personnel airlocks at both grade and operating deck levels
- **Improved Separation**
  - Radioactive vs nonradioactive, electrical vs mechanical
  - Fire areas, especially inside containment
  - Safety vs nonsafety

AP1000 General Arrangement

Plan at Elevation 135'

AP600

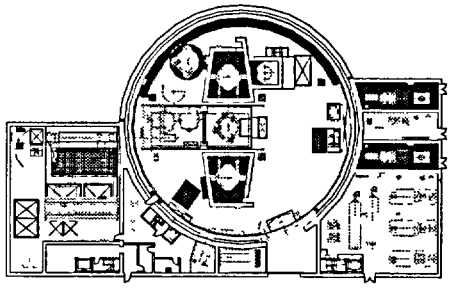

AP1000

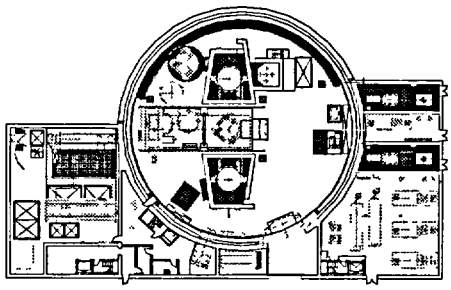

AP1000 General Arrangement

Containment Section View

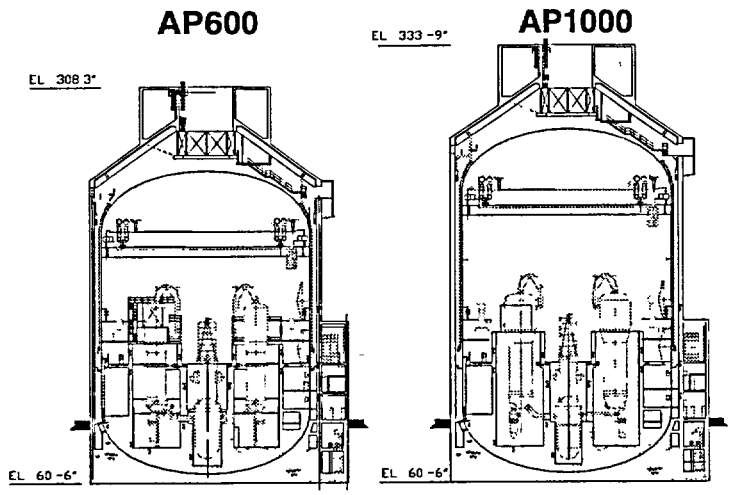

BNFL Slide 62 Westinghouse

AP1000 Construction Approach

- **Simplification of Systems**
  - Major reduction in bulk materials and field labor
- **Maximize Use of Modularization**
  - 300 rail-shippable equipment and piping modules
  - 50 large structural modules
    - Assembled on-site from rail-shippable structural modules
  - Factory based manufacture and assembly of modules
    - Predictable, short manufacturing schedule
    - Improved quality control
      - Pre-testing and inspection prior to shipment
  - Streamlined field installation
    - Modules reduce field labor
    - Use of detailed work sequencing

BNFL Slide 63 Westinghouse

Examples of AP1000 Modules

- Large Structural Modules Built Up From Rail Shipable Modules
- Equipment Modules Are Rail Shipable

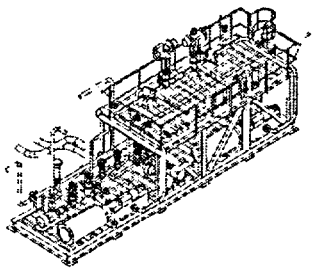

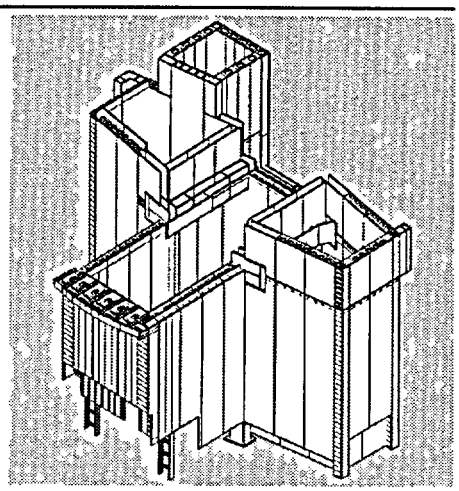

Simplifications Reduce Cost

- Elimination of Safety Pumps, Fans, Diesel Generators
- Reduced Number of Components / Building Volumes

	600 MW Reference	AP1000	Reduction
Pumps	280	184	34%
ASME Valves	2844	1400	51%
ASME Piping	90000 LF	18700 LF	79%
Cable	3.4 mil. LF	1.0 mil. LF	70%
Seismic Bldg Vol.	9,412,963 ft^3	5,041,800 ft^3	46%

AP1000 Overview

- Technical Feasibility of AP1000 Established
- Retains AP600 Design Detail
- Retains Credibility of Cost Estimate and Construction Schedule
- Established Regulatory Framework
- AP1000 provides 75% power uprate for 15% increment in capital cost
- AP1000 Meets New Plant Economic Targets in the Near Term

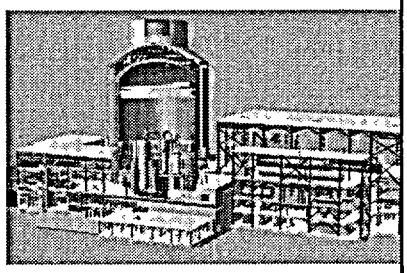

AP1000 Probabilistic Risk Assessment

Selim Sancaktar
Fellow Engineer, Reliability and Risk Assessment
412-374-5983 - sancaks@westinghouse.com

OBJECTIVES

- **Purpose of the AP1000 PRA**
  - Provide inputs to the optimization of the design
  - Verify that US NRC PRA safety goals are satisfied
- **PRA is Being Performed Interactively With**
  - Design, analysis and operating procedures
  - Same process as AP600

Probabilistic Risk Assessment Used as a Design & Licensing Tool

- **PRA Used Extensively in the Design and Licensing of AP600**
  - 7 PRA iterations performed throughout AP600 development (1987-1997)
    - Extensive interaction with plant designers / nsk analysts / NRC reviewers
    - Selection of diverse functions / components - DAS
  - Regulatory Treatment of Non-Safety Systems (RTNSS)
    - PSA approach to assess reliability of passive / active systems
  - Shutdown PRA; Fire PRA, Flooding PRA
  - Thermal-hydraulic uncertainties addressed explicitly in PRA
    - 90% of success sequences bounded with conservative T-H analysis
- **W Performed a Comprehensive AP1000-specific PRA**
  - Level 1, 2 and 3 PRA - similar scope and content to AP600 PRA
  - Builds on AP600 PRA insights
    - Addresses shutdown, fire, flooding, RTNSS, T/H uncertainties

TECHNICAL SCOPE

- Since the configuration of the AP1000 reactor and safety systems is the same as the AP600, the AP600 PRA is used as the basis of the AP1000 PRA with relevant changes implemented in the model to reflect the AP1000 design changes.

TECHNICAL SCOPE

- AP1000 plant-specific T&H analyses are performed in order to determine the system success criteria.
- The CDF and LRF are calculated for internal events at-power. The off-site dose risk analysis is also performed. The external events and shutdown models are also assessed to derive plant insights and plant risk conclusions.

AP1000 Large LOCA Event Tree

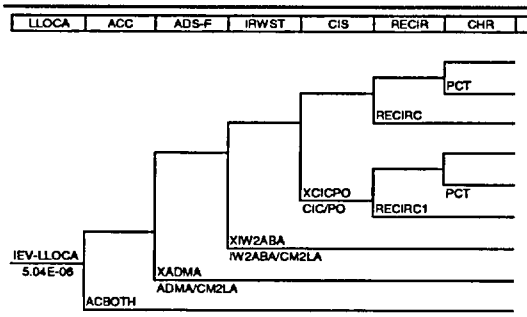

	PDS	FREQ		LCF
1	LLO-OK1			
2	LCF		lcllo-02	6.87E-12
3	3BL	8.43E-11	2illo-03	
4	LLO-OK2			
5	LCF		lcllo-05	1 60E-12
6	3BL	1 77E-14	2illo-06	
7	3BE	3 40E-10	2ello-07	
8	3D	1 97E-09	3dllo-08	
9	3BR	4.26E 08	2rllo-09	
Total CDF =		4.50E 08		8.47E-12

List of Top Events

Event	Description
LLOCA	Large LOCA Event Occurs
ACC	Accumulators Inject
ADS-F	Full RCS Depressurization by ADS occurs
IRWST	RCS Refill from IRWST by Gravity Injection Occurs
CIS	Containment Isolation Occurs
RECIR	Water Recirculation to RPV from the Sump Occurs
CHR	Containment Cooling is Established

Typical AP1000 PRA System Failure Probabilities

Failure System/Function	Probability	Fault Tree Name
CMT Valve Signal	5.70E-07	CMT IC11 (one train, auto and manual actuation)
PRHR Valve Signal	1 10E-06	RHR-IC01 (one train auto and manual actuation)
Passive Cont. Cool	1 80E-06	PCT
Reactor Trip by PMS	1.20E-05	RTPMS (including operator actions)
Accumulators	6.90E-05	AC2AB
IRWST Inj.	6.90E-05	IW2AB
ADS	9.30E-05	ADS (including operator actions)
Passive PRHR	2.00E-04	PRT
Core Makeup Tanks	1 10E-04	CM2SL
125 vdc 1E Bus	3.10E-04	IDADS1 (one bus only)
DC Bus (Non-1E)	3.40E-04	ED1DS1 (one bus only)
RC Pump Trip	5.90E-04	RCT
Chilled Water	1 40E-03	VWH
Containment Isol.	1 60E-03	CIC
Reactor Trip by DAS failure))	1 70E-03	DAS (including operator action; excluding MGSET
6900 vac Bus	3.20E-03	ECES1 (obe bus only)
CVS	3.40E-03	CVS1
480 vac Bus	5.90E-03	ECEK11 (one bus only)
Service Water	6.20E-03	SWT
Comp Cooling Water	6.30E-03	CCT
Diesel Generators	1 00E-02	DGEN
Startup Feedwater	1 70E-02	SFWT
Compressed Air	1 30E-02	CAIR
Condenser	2.40E-02	CDS
Main Feedwater	2.80E-02	FWT (including condenser)
RNS	9.10E-02	RNR
Hydrogen Control	1 00E-01	VLH

Contribution of Initiating Events to AP1000 CDF

	IEV CATEGORY	CONTRIBUTION TO CDF	CONTRIBUTION TO CDF (%)	IEV FREQUENCY	CONDITIONAL CDF
1	IEV-SI-LB	9.50E-08	39.43	2.12E-04	4.48E-04
2	IEV-LLOCA	4.50E-08	18.66	5.00E-06	8.99E-03
3	IEV-SPADS	2.96E-08	12.28	5.40E-05	5.48E-04
4	IEV-SLOCA	1 81E-08	7 5	5.00E-04	3.62E-05
5	IEV-MLOCA	1 61E-08	6.69	4.36E-04	3.70E-05
6	IEV-RV-RP	1 00E-08	4 15	1 00E-08	1 00E+00
7	IEV-SGTR	6.79E-09	2.82	3.88E-03	1 75E-06
8	IEV-CMTLB	3.68E-09	1.53	9.31E-05	3.95E-05
9	IEV-ATWS	3.61E-09	1.5	4.81E-01	7 49E-09
10	IEV-TRANS	3.08E-09	1.28	1 40E+00	2.20E-09
11	IEV-RCSLK	1 71E-09	0 71	6.20E-03	2.75E-07
12	IEV-POWEX	1 66E-09	0.69	4.50E-03	3.69E-07
13	IEV-LCOND	1 24E-09	0.52	1 12E-01	1 11E-08
14	IEV-LOSP	9.58E-10	0.4	1.20E-01	7.98E-09
15	IEV-LMFW	8.70E-10	0.36	3.35E-01	2.60E-09
16	IEV-ATW-T	7 12E-10	0.3	1 17E+00	6.09E 10
17	IEV-LCAS	6.72E-10	0.28	3.48E-02	1.93E-08
18	IEV-SLB-V	6.06E-10	0.25	2.39E-03	2.54E-07
19	IEV-PRSTR	5.02E-10	0.21	1.34E-04	3.74E-06
20	IEV-LMFW1	4.53E-10	0.19	1 92E-01	2.36E-09
21	IEV-LCCW	3.23E-10	0.13	1.44E-01	2.24E-09
22	IEV-SLB-U	1 31E-10	0.05	3.72E-04	3.51E-07
23	IEV-ATW-S	1 11E-10	0.05	1.48E-02	7.48E-09
24	IEV-ISLOC	5.00E-11	0.02	5.00E-11	1 00E+00
25	IEV-LRCS	3.52E-11	0.01	1 80E-02	1 96E-09
26	IEV-SLB-D	9 15E-12	0	5.96E-04	1.54E-08
	Totals =	2.41E-07	100.0	2.38*	

* The total initiating event frequency excludes the three ATWS precursor frequencies

BNFL Slide 74 Westinghouse

Comparison of AP600 and AP1000 CDF

IEV CATEGORY	AP600 CONTRIBUTION TO CDF	AP600 CONTRIBUTION TO CDF (%)	AP600 IEV FREQUENCY	AP600 CONDITIONAL CDF (P1)	AP1000 CONTRIBUTION TO CDF	AP1000 CONTRIBUTION TO CDF (%)	AP1000 IEV FREQUENCY	AP1000 CONDITIONAL CDF (P2)	RATIO P2/P1
IEV-LLOCA	5.02E-08	29 67	1 05E-04	4 78E-04	4.50E-08	18.66	5.00E-06	8.99E-03	18.8
IEV-SI-LB	3.82E-08	22 58	1 04E-04	3.67E-04	9 50E-08	39 43	2.12E-04	4.48E-04	1 2
IEV-NLOCA	3 15E-08	18 63	7 70E-04	4 09E-05					
IEV-RV-RP	1 00E-08	5.91	1 00E-08	1 00E+00	1 00E-08	4 15	1 00E-08	1 00E+00	1
IEV-ATWS	8.98E-09	5.31	4.81E-01	1 87E-08	3.61E-09	1 5	4.81E-01	7 49E-09	0.4
IEV-MLOCA	6.23E-09	3.68	1 62E-04	3.85E-05	1 61E-08	6.69	4.36E-04	3 70E-05	1
IEV-SGTR	6.08E-09	3.6	5.20E-03	1 17E-06	6.79E-09	2 82	3.88E-03	1 75E-06	1 5
IEV-SLOCA	4.05E-09	2 4	1 01E-04	4.01E-05	1 81E-08	7 5	5.00E-04	3.62E-05	0.9
IEV-CMTLB	3.54E-09	2.09	8.94E-05	3 96E-05	3.68E-09	1 53	9.31E-05	3.95E-05	1
IEV-RCSLK	2 26E-09	1 34	1 20E-02	1 89E-07	1 71E-09	0.71	6.20E-03	2 75E-07	1 5
IEV-POWEX	1 83E-09	1 08	4.50E-03	4 07E-07	1 66E-09	0.69	4.50E-03	3.69E-07	0 9
IEV-TRANS	1 14E-09	0.67	1 40E+00	8.14E-10	3.08E-09	1 28	1 40E+00	2.20E-09	2.7
IEV LCOND	1 03E-09	0.61	1 12E-01	9 23E-09	1 24E-09	0.52	1 12E-01	1 11E-08	1 2
IEV-LOSP	1 01E-09	0.6	1 20E-01	8.40E-09	9.58E-10	0.4	1.20E-01	7 98E-09	1
IEV-ATW-T	7 12E-10	0.42	1 17E+00	6.09E-10	7 12E-10	0.3	1 17E+00	6.09E-10	1
IEV PRSTR	5.58E-10	0.33	2.50E-04	2.23E-06	5.02E-10	0.21	1 34E-04	3.74E-06	1 7
IEV-SLB-V	4.82E-10	0.28	1 21E-03	3.98E-07	6.06E-10	0.25	1 21E-03	5.01E-07	1 3
IEV-ATW-S	3.82E-10	0.23	2.05E-02	1 86E-08	1 11E 10	0.05	1 48E-02	7.48E-09	0.4
IEV-LMFW	3.03E 10	0 18	3.35E-01	9 04E-10	8 70E-10	0.36	3.35E-01	2.60E-09	2 9
IEV-LMFW1	1 76E 10	0 1	1 92E-01	9 16E-10	4.53E-10	0 19	1 92E-01	2.36E-09	2 6
IEV-LCAS	1 73E 10	0 1	3.48E-02	4.98E-09	6.72E-10	0.28	3.48E-02	1 93E-08	3 9
IEV-SLB-U	1.23E 10	0.07	3.72E-04	3.31E-07	1 31E-10	0.05	3.72E-04	3.51E-07	1 1
IEV-LCCW	1.23E 10	0.07	1 44E-01	8.52E-10	3.23E-10	0 13	1 44E-01	2.24E-09	2 6
IEV-ISLOC	5.00E-11	0.03	5.00E-11	1 00E+00	5.00E 11	0.02	5.00E-11	1 00E+00	1
IEV-LRCS	1.27E-11	0.01	1 80E-02	7 06E-10	3.52E 11	0.01	1 80E-02	1 96E-09	2 8
IEV-SLB-D	9 46E-12	0.01	5.96E-04	1 59E-08	9 15E 12	0	5.96E-04	1 54E-08	1
IEV-SPADS					2.96E-08	12.28	5.40E-05	5.48E-04	
Totals:	1 69E-07	100	2.38E+00		2.41E-07	100	2.37E+00		

BNFL Slide 75 Westinghouse

AP1000 PRA Dominant CDF Sequences

	Sequence Frequency	% Contrib	Cum. % Contrib	Sequence ID	Sequence Description	Event Identifier
1	6.68E-08	28.52	28.52	2sail-07	SAFETY INJECTION LINE BREAK INITIATING EVENT OCCURS	IEV-SILB
					RCPS TRIP AND CMT INJECTION IS SUCCESSFUL - 1 OF 2 CMT TRAINS	DEL-XCM1A
					SUCCESS OF FULL ADS DEPRESSURIZATION	DEL-ADM
					FAILURE OF ONE OF ONE IRWST INJECTION LINE	SYS-IW1A
2	4.26E-08	17.66	46.18	2rilo-09	LARGE LOCA INITIATING EVENT OCCURS	IEV-LLOCA
					ANY ONE OF TWO ACCUMULATOR TRAINS FAIL	SYS-ACBOTH
3	2.13E-08	8.82	55	3dsad-08	SPURIOUS ADS INITIATING EVENT OCCURS	IEV-SPADS
					SUCCESS OF 1/2 OR 2/2 ACCUMULATORS	DEL AC2AB
					FAILURE OF ADS OR CMT	SYS XADMA
4	1.98E-08	8.23	63.23	3dsil-08	SAFETY INJECTION LINE BREAK INITIATING EVENT OCCURS	IEV-SILB
					RCPS TRIP AND CMT INJECTION IS SUCCESSFUL - 1 OF 2 CMT TRAINS	DEL XCM1A
					FAILURE OF FULL ADS DEPRESSURIZATION	SYS-ADM
5	1.00E-08	4.15	67.38	3crw-02	REACTOR VESSEL RUPTURE INITIATING EVENT OCCURS	IEV RV RP
6	8.44E-09	3.5	70.88	2slo-05	SMALL LOCA INITIATING EVENT OCCURS	IEV-SLOCA
					SUCCESS OF CMT & RCP TRIP	DEL XCM2SL
					SUCCESS OF PASSIVE RHR SYSTEM	DEL-PRL
					SUCCESS OF FULL ADS DEPRESSURIZATION	DEL-ADS
					FAILURE OF NORMAL RHR IN INJECTION MODE	SYS-RNR
					SUCCESS OF TWO OF TWO IRWST INJECTION LINES	DEL-IW2AB
					SUCCESS OF CIS & PRE-EXISTING CONTAINMENT OPENING	DEL-XCICPO
					FAILURE OF RECIRCULATION	SYS-RECIRC

AP1000 PRA Dominant CDF Sequences

	Sequence Frequency	% Contrib	Cum. % Contrib	Sequence ID	Sequence Description	Event Identifier
7	7.35E-09	3.05	73.93	2tmlo-05	MEDIUM LOCA INITIATING EVENT OCCURS	IEV-MLOCA
					SUCCESS OF CMT & RCP TRIP	DEL-XCM2NL
					SUCCESS OF FULL ADS DEPRESSURIZATION	DEL-ADM
					FAILURE OF NORMAL RHR IN INJECTION MODE	SYS-RNR
					SUCCESS OF TWO OF TWO IRWST INJECTION LINES	DEL-IW2AB
					SUCCESS OF CIS & PRE-EXISTING CONTAINMENT OPENING	DEL-XCICPO
					FAILURE OF RECIRCULATION	SYS-RECIRC
8	5.11E-09	2.12	76.05	3dmlo-12	SMALL LOCA INITIATING EVENT OCCURS	IEV-SLOCA
					SUCCESS OF CMT & RCP TRIP	DEL XCM2SL
					SUCCESS OF PASSIVE RHR SYSTEM	DEL-PRL
					FAILURE OF FULL ADS DEPRESSURIZATION	SYS-ADS
					SUCCESS OF PARTIAL ADS DEPRESSURIZATION	DEL-ADV
					FAILURE OF NORMAL RHR IN INJECTION MODE	SYS-RNR
9	4.46E-09	1.85	77.9	3dmlo-12	MEDIUM LOCA INITIATING EVENT OCCURS	IEV-MLOCA
					SUCCESS OF CMT & RCP TRIP	DEL-XCM2NL
					FAILURE OF FULL ADS DEPRESSURIZATION	SYS-ADM
					SUCCESS OF PARTIAL ADS DEPRESSURIZATION	DEL ADU
					FAILURE OF NORMAL RHR IN INJECTION MODE	SYS-RNR
10	3.72E-09	1.54	79.44	2rsad-09	SPURIOUS ADS INITIATING EVENT OCCURS	IEV SPADS
					FAILURE OF 2/2 ACCUMULATORS	SYS-AC2AB
11	3.67E-09	1.52	80.96	2essad-07	SPURIOUS ADS INITIATING EVENT OCCURS	IEV SPADS
					SUCCESS OF 1/2 OR 2/2 ACCUMULATORS	DEL-AC2AB
					SUCCESS OF ADS & CMT	DEL-XADMA
					FAILURE OF IRW OR CMT	SYS XIW2ABA

AP1000 PRA System Importances

System Name	Case Description	Core Damage Frequency With System Failed (QNEW)	Core Damage Frequency Increasing Factor (R = QNEW / 2.41E-7)
PMS	No credit is taken for PMS in core damage sequences	1.59E-02	65878
DC-1E	No credit is taken for 1E DC Power in core damage sequences	5.65E-03	23454
IRWST-REC	No credit is taken for IRWST Recirculation in core damage sequences	1.47E-03	6119
ADS	No credit is taken for ADS in core damage sequences	1.46E-03	6040
IRWST-INJ	No credit is taken for IRWST Injection in core damage sequences	3.93E-04	1631
CMT	No credit is taken for CMT in core damage sequences	7.08E-05	294
ACC	No credit is taken for Accumulators in core damage sequences	6.01E-05	249
PRHR	No credit is taken for Passive RHR in core damage sequences	1.84E-05	76
PLS	No credit is taken for PLS in core damage sequences	9.00E-06	7
DC-Non 1E	No credit is taken for Non-1E DC Power in core damage sequences	6.56E-06	27
DAS	No credit is taken for DAS in core damage sequences	2.63E-05	16
AC	No credit is taken for AC Power in core damage sequences	2.36E-06	10
CAS	No credit is taken for CAS in core damage sequences	4.14E-07	1.7
N-RHR	No credit is taken for Normal RHR in core damage sequences	4.11E-07	1.7
SWS	No credit is taken for SWS in core damage sequences	4.00E-07	1.7
CCS	No credit is taken for CCS in core damage sequences	3.78E-07	1.6
SFW	No credit is taken for Startup Feedwater in core damage sequences	2.78E-07	1.2
DG	No credit is taken for Diesel Generators in core damage sequences	2.56E-07	1.1
MFW	No credit is taken for Main Feedwater in core damage sequences	2.54E-07	1.1
SG Overfill Protection	No credit is taken for SG Overfill Protection in core damage sequences	2.41E-07	1

UNCERTAINTY ANALYSIS

- **The plant CDF uncertainty range**
  - Is 7.3 E-07 to 2.1 E-08 / yr
  - For the 95% to 05 % interval
- **For a lognormal distribution**
  - Corresponds to an error factor of 6
  - Considered as low for rare events

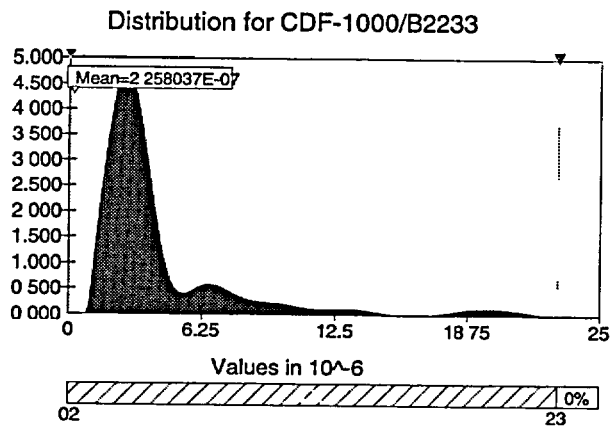

Name	CDF-1000
Cell	B2233
Minimum	4 33E-09
Mean	2 26E-07
Maximum	2 11E-05
Std Dev	6 78E-07
Variance	4 60E-13
Skewness	16 32415
Kurtosis	386 4707
Mode	2 91E-08
Left X	1 78E-08
Left P	3%
Right X	0 000023
Right P	100%
Diff X	2 30E-05
Diff. P	97%
5th Perc.	2.11E-08
95th Perc	7 29E-07
#Errors	0
Filter Min	
Filter Max	
#Filtered	0

UNCERTAINTY ANALYSIS

- The mean values of the dominant accident sequence frequencies are close to the upper bound (95%) estimates;
- Among the initiating event categories, SI-LB has the highest 95-percentile CDF of 3.2E-07 /year.
- Among the dominant sequences, sequence # 07 of SI-LB event has the highest 95-percentile CDF of 2.1E-07/yr.

SHUTDOWN EVENTS

- A quantitative shutdown risk evaluation is performed for AP1000 for internal events.
- The risk profiles of AP1000 and AP600 for events during shutdown conditions are almost identical.
- The AP1000 Shutdown PRA has a CDF of 1.23E-07 events per year. This CDF is an 18% increase of the AP600 Level 1 Shutdown CDF of 1.04E-07 events per year.

SHUTDOWN EVENTS

- RCS Drained is Dominate Condition
  - Three dominate initiating events from drain conditions
    - Loss of component cooling / service water
    - Loss of offsite power
    - Loss of RNS
- Initiating Event Importance is Similar Between AP600 and AP1000
  - Shown by initiating event CDF contributions

SHUTDOWN EVENTS

- **Dominant Shutdown Accident Sequences**
  - Top twelve accident sequences comprise 77% of the level 1 shutdown CDF
- **They consist of:**
  - Loss of component cooling or service water system initiating event during drained condition with a contribution of 64% of the CDF
  - Loss of RNS initiating event during drained condition with a contribution of 6% of the CDF

SHUTDOWN EVENTS

- Loss of offsite power initiating event during drained condition with a contribution of 5% of the CDF
- RCS overdraining event during drainage to mid-loop with a contribution of 2% of the CDF

INTERNAL FLOODING AND FIRE

- The internal flooding-induced CDF is estimated to be 8.8E-10 events per year for power operations.
- The CDF from flooding events at power is not an appreciable contributor to the overall AP1000 plant CDF.

INTERNAL FLOODING AND FIRE

- The top five at-power flooding scenarios comprise 91 percent of the at-power flooding-induced core damage frequency.
- These scenarios are for large pipe breaks in the turbine building with an initiating event frequency in the range of 1.4 – 2.0 E-03 / year, leading to a loss of CCW/SW event. Each scenario has a CDF of 1.2 – 1.8E-10/year.

INTERNAL FLOODING AND FIRE

- **Extensive fire hazards analysis review completed for AP600 subsequent to fire AP600 PRA**
  - Fire separation improved
  - Fire suppression features incorporated
  - Design features incorporated to address hot-shorts
- **AP1000-specific Fire PRA is performed with a resulting CDF of 5.61E-08/yr (for internal events)**

INTERNAL FLOODING AND FIRE

- **AP600 design features important for fire protection are included in the AP1000**
  - Fire separation / fire zones
  - Systems used to achieve safe shutdown
  - Fire suppression features
- **AP1000 design is sufficiently robust that internal fires during power operation or shutdown do not represent a significant contribution to plant CDF**

SEISMIC MARGINS EVALUATION

- The seismic margin analysis shows the systems, structures, and components required for safe shutdown. HCLPF values are greater than or equal to 0.50g
- This HCLPF is determined by the seismically induced failure of the fuel in the reactor vessel, core assembly failures, IRWST failure, or containment interior failures

SEISMIC MARGINS EVALUATION

- The SMA result assumes no credit for operator actions at the 0.50g review level earthquake, and assumes a loss of offsite power for all sequences
- The SMA shows the plant to be robust against seismic event sequences that contain station blackout coupled with other seismic or random failures

Comparison of Low HCLPF SSCs in AP1000 and AP600 Designs

Basic Event ID	Description	AP600 HCLPF	AP1000 HCLPF
EQ-CER-INSULATOR	Failure of Ceramic Insulators	0 09g	09g
EQ-CORE-ASSEMBLY	Core Assembly Failure (not fuel)	0 50g	.50g
EQ-CV-INTER	Interior Containment	0 60g	50g
EQ-IRWST-TANK	IRWST Failure	0 60g	50g
EQ-RV-FUEL	Fuel Failure	0 50g	50g
EQ-AB-EXTWALL	Aux. Building Exterior wall	0 58g	51g
EQ-AB-FLOOR	Aux. Building Floor	0 58g	51g
EQ-AB-INTWALL	Aux. Building Interior wall	0 58g	51g
EQ-PCC-TANK	PCC Tank Failure	0 58g	51g
EQ-SHDBLD-ROOF	Shield Building Roof	0 58g	51g
EQ-SHDBLD-WALL	Shield Building Wall	0 58g	51g
EQ-CABLETRAY	Cable trays - support controlled	0 54g	54g
EQ-CMT-TANKS	Tank PXS 2A/B (Core Makeup Tank)	0 63g	54g
EQ-SG-FAILS	Steam Generator Fails	0 65g	54g
EQ-SGTR	Steam Generator Piping (one or a few)	0 65g	54g
EQ-ACDISPANEL	120 vac distribution panel	0 51g	55g
EQ-DC-SWBRD	125 vdc switchboard	0 51g	55g
EQ-DCDISPANEL	125 vdc distribution panel	0 51g	55g
EQ-PRZR-FAILS	Pressurizer Fails	0 67g	55g
EQ-TRSFSWITCH	Transfer switch	0 51g	55g

BNFL Slide 92 Westinghouse

Comparison of AP600 and AP1000 PRA Results

Scope	AP600	AP1000
Level 1 At-Power Internal Initiating Events	Quantification Performed CDF = 1 7E-07 Several additional cases quantified in response to NRC RAIs	Quantification Performed CDF = 2 4E-07 AP600 additional cases incorporated into the model
Level 2 At-Power Internal Initiating Events	Quantification Performed LRF = 1 8E-08 Containment Effectiveness = 89 5%	Quantification Performed LRF = 2 0E-08 Containment Effectiveness = 91 8%
Level 3 At-Power Internal Initiating Events	Quantification Performed	Quantification Performed
Internal Fire Events	Conservative (via focused PRA) Quantification Performed CDF = 6 5E-07 (internal) CDF = 3.5E-07 (shutdown)	Quantification performed CDF = 5 61E-08
Internal Flooding Events	Quantification Performed CDF = 2.2E-10	Quantification Performed CDF = 8 8E-10
Shutdown Events	Quantification Performed for Level 1 and 2 CDF = 1 0E-07 LRF = 1 5 E-08 Several additional cases quantified in response to NRC RAIs	Quantitative Evaluation Performed CDF = 1 2E-07 AP600 additional cases incorporated into the estimation model
Focused PRA Internal Events At-Power	Quantification Performed CDF = 9.1E-06 LRF = 8.1E-07 Availability controls of NSS adopted	Sensitivity studies performed demonstrate that NSS are not important for AP1000 risk Same availability controls on NSS adopted for AP1000

BNFL Slide 93 Westinghouse

AP1000 Level 2 PRA

Selim Sancaktar
Fellow Engineer, Reliability and Risk Assessment
412-374-5983 - sancaks@westinghouse.com

Purpose of Level 2 PRA

- **Determine Status of Containment Integrity**
  - System failures (unisolated SGTR, isolation failure)
  - Failure due to high energy phenomena
    - Induced tube rupture
    - Steam Explosion (in-vessel and ex-vessel)
    - Hydrogen Combustion
    - High Pressure Melt Ejection / Direct Containment Heating
    - Debris Impingement
    - Core-Concrete Interaction
    - Long Term Containment Pressurization from Decay Heat Steaming

Severe Accidents Addressed

- **Core-Concrete Interaction**
  - Prevented by invessel retention (IVR)
    - Provides reliable means of cooling damaged core
- **High Pressure Core Melt**
  - Eliminated with multiply redundant / diverse ADS
- **Hydrogen Detonation, Heating of Containment**
  - Prevented by igniters and passive autocatalytic recombiners
  - IRWST vent design prevents standing H2 flames near cont. wall
    - AP1000 design changed so that IRWST vents located near containment wall open with higher DP than vents located away from containment
- **Steam Explosions**
  - ADS prevents high pressure events
  - IVR prevents low pressure events

In-Vessel Retention of Molten Core Debris

- **AP600 Tests, Analysis of IVR Reviewed by U.S. NRC**
- **Changes To AP1000 That Potentially Impact IVR**
  - Power is increased to 3400 MWt
  - More fuel (157 14-ft fuel assemblies)
  - Use of core shroud instead of reflector
  - Lower core support plate is 1" thicker
- **IVR Capability Has Been Improved**
  - Earlier flooding of containment provided by change in emergency procedures
  - RV insulation gap is optimized based on AP1000 tests
  - Vent area increased

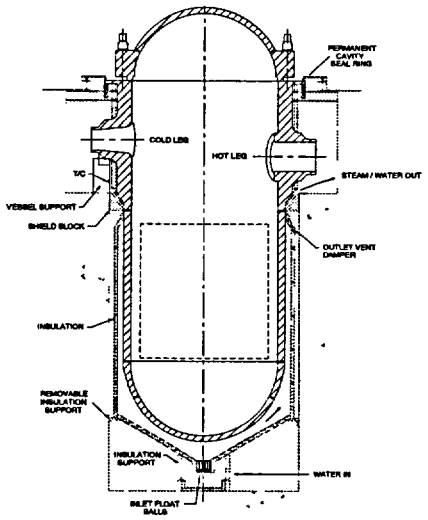

Purpose of Level 2 PRA

- **Quantify Magnitude and Timing of Offsite Release**
  - Accident Classes (same as AP600)
  - Release Categories (same as AP600, plus CFV)
  - Source Terms (assumed same fractions as AP600)

AP1000 Containment Event Tree

- **Similar to AP600**
  - Added possibility of containment venting
    - added CFV release category
    - assumed failure probability of unity

AP1000 CET NODES

Node	Question
Node DP	Is the reactor coolant system sufficiently depressurized prior to steam generator tube failure or core relocation?
Node IS	Is the containment isolated prior to core damage?
Node IR	Is the water level in the reactor cavity sufficent to submerge the reactor vessel above the 98-ft elevation in the containment?
Node RFL	Is the in-vessel damaged core reflooded?
Node VF	Is the core debris maintained inside the reactor vessel?
Node PC	Is the passive containment cooling system containment shell adequately cooled with water?
Node VT	Is the overpressurized containment vented?
Node IF	Does the overpressurized containment not fail before 24 hours?
Node IG	Are the hydrogen igniters operating?
Node DF	Does the containment not fail from elevated temperature due to diffusion flame in the CMT room and at the IRWST vent?
Node DTE	Does the containment not fail from detonation during in-vessel hydrogen release to containment?
Node DFG	Does the containment not fail from hydrogen deflagration?
Node DTI	Does the containment not fail from hydrogen deflagration-to-detonation transition (DDT) before 24 hours?

BNFL Slide 100 Westinghouse

AP1000 Containment Event Tree

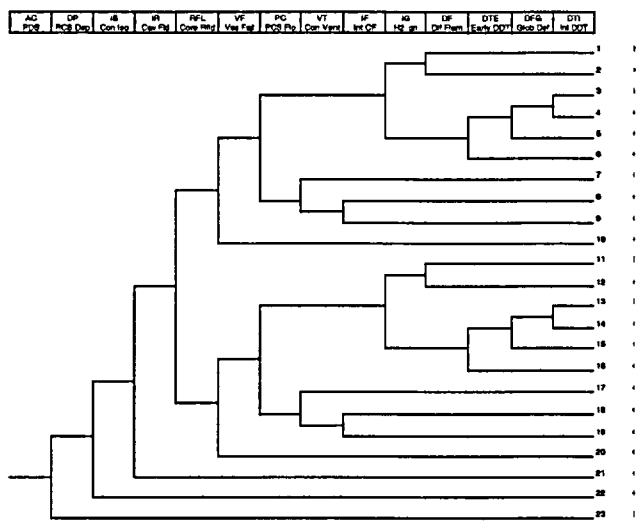

BNFL Slide 101 Westinghouse

Containment Event Tree Quantification

- **System Nodes**
  - Quantification
    - Linked Fault Trees
    - Scalars defined by accident class definition
  - containment isolation
  - cavity flooding
  - PCS water cooling
  - hydrogen control

Containment Event Tree Quantification

- **Phenomenological Nodes**
  - Quantification
    - Scalars defined by analysis of phenomena
    - boundary conditions defined by accident class
  - induced SGTR tube rupture
  - core reflooding
  - in-vessel retention of molten core debris
  - hydrogen combustion
  - containment integrity

Level 2 At-Power Results

- **Core Damage Frequency = 2.41×10^{-7} per year**
- **Large Release Frequency = 1.95×10^{-8} per year**
- **Frequency by Release Categories**
  - Containment Bypass = 1.05×10^{-8}
  - Early Containment Failure = 7.47×10^{-9}

Level 3 PRA Results

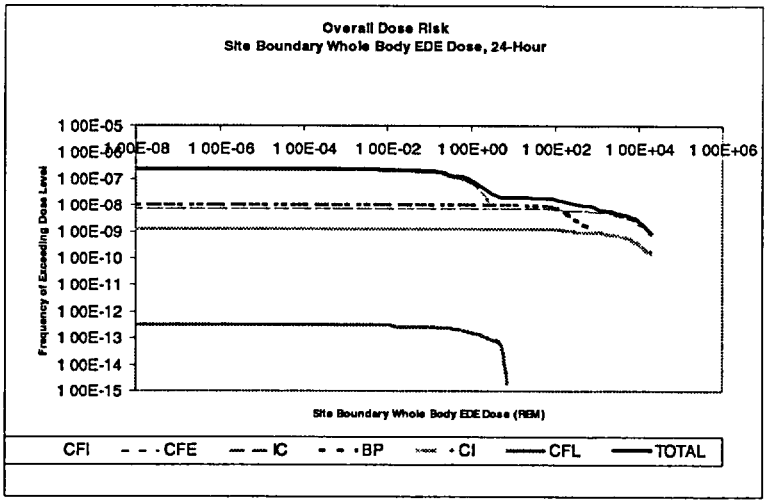

SUMMARY OF RESULTS

- **The AP1000 PRA Results Show**
  - The very low risk of the AP600 has been maintained in the AP1000
  - The AP1000 PRA meets the US NRC safety goals with significant margin

U.S. NRC's Review of the AP1000 Standard Plant Design

- Larry Burkhart, Project Manager
- New Reactor Licensing Project Office
- Current Review Plan

Thursday, November 7, 2002

30 231

Current Review Plan

- Completed pre-application review in March 2002 (18 month duration)
  - Applicability of the AP600 test program and analysis codes to the AP1000
  - Acceptability of using design acceptance criteria (DAC)
  - Feasibility of requesting certain exemptions
- Westinghouse (W) submitted DC application on 3/28/02
- W provided supplemental information through 5/31/02
- NRC accepted the application for docketing on 6/25/02
- 700 RAIs issued by 9/30/02 (as compared to over 7000 for AP600) NOTE: As of 10/23/02, W has responded to approximately 370 RAIs (the NRC staff is evaluating)

31 32

Current Review Plan (cont'd)

- We responds to RAIs by 12/2/02
- NRC issues draft safety evaluation report (DSER) with open items by 6/16/03
- We addresses open items by 8/16/03
- Meet with full Advisory Committee on Reactor Safeguards (ACRS) between June 2003 and July 2004
- Final SER issued no later than September 2004
- Final design approval issued no later than October 2004
- Rulemaking completed no later than December 2005 (process includes public hearings and Commission review)

32 ; 33

AP1000 Pre-application Review

- Completed pre-application review in March 2002 (18 month duration)
  - Applicability of the AP600 test program and analysis codes to the AP1000
  - Acceptability of proposed use of design acceptance criteria (DAC) in lieu of providing detailed design information
  - Feasibility of requesting certain exemptions
- In general, we found that the AP600 test program and analysis codes are applicable to the AP1000 design certification
- We found acceptable the use of the DAC approach for instrumentation and controls, control room (human factors), and piping design areas (details to be pursued in the DC review)
- The 3 proposed exemption requests (that were granted for the AP600) appear to be justifiable for the AP1000

33.224

AP1000 Review Approach

- The AP1000 design is based closely on the AP600 design which was certified in December 1999
- Our approach is to review the differences between the AP600 and AP1000 designs and focus our efforts on determining the acceptability of those changes
  - We are reviewing how the design changes affect the safety bases as documented in our AP600 final safety evaluation report
  - If the change does not affect the bases, we will utilize the existing evaluation,
  - If the safety basis for approving the design is no longer valid or we are uncertain as to its validity, we request additional information from Westinghouse (if the information has not already been provided) and evaluate

34 : 35

Category of RAIs

- General – 3
- Mechanical Eng. – 70
- Structural Eng. – 19
- Seismology – 19
- Hydrol. And Meteor. – 4
- Geotech. Eng. – 3
- Inservice Inspection – 3
- Component Integrity – 29
- Materials Application – 9
- QA and RAP – 3
- Emergency Planning – 3
- Containment Systems – 9
- Technical Specifications – 53
- ITAAC – 1
- Initial Test Program – 13
- Fire Protection – 11
- Chemical Tech. – 3
- Auxiliary Systems – 21
- I & C – 46
- Electric Power – 15
- Reactor Systems – 182
- Meteorology – 7
- Effluent Treatment – 11
- Radiological Impact – 13
- Radiation Protection – 10
- Human System Interface – 43
- Reliability and Risk Assessment – 97

Thursday, November 7, 2002 6

35 of 36

Most Significant Issues to Resolve Prior to Design Certification

- The most challenging issues with regard to completing the safety evaluation report:
  - Liquid entrainment in HL and UP during ADS-4 blowdown after a loss of coolant accident
  - Question was raised during the pre-application review regarding the applicability of test data and code modeling
  - RAI regarding possible conflicts between info provided by W and test data available to NRC
  - How well do we need to understand the phenomena versus its safety significance?

36 037

Most Significant Issues to Resolve Prior to Design Certification (cont'd)

- New safeguards and security requirements for new reactors in the U.S.
  - What will new requirements be, if any (for operating and new plants)?

37 of 32

New Reactor Licensing Schedule

ID	Task Name
1	**Early Site Permits**
2	Exelon
3	Entergy
4	Dominion
5	**Design Certifications**
6	**AP1000 Certification**
7	Application submitted
8	Request for Additional Information
9	Draft Safety Evaluation Report
10	Final Safety Evaluation Report
11	Final Design Approval
12	Rulemaking completed
13	**ESBWR pre-application**
14	kickoff meeting
15	Phase 1 completed
16	Request for Additional Information
17	Draft Safety Evaluation Report
18	Phase 2 complete
19	ESBWR Design Certification Applic.
20	**ACR-700 pre-application review**
21	**SWR-1000 pre-application review**
22	**GT-MHR pre-application review**
23	**IRIS pre-application review**
24	**PBMR pre-application review**

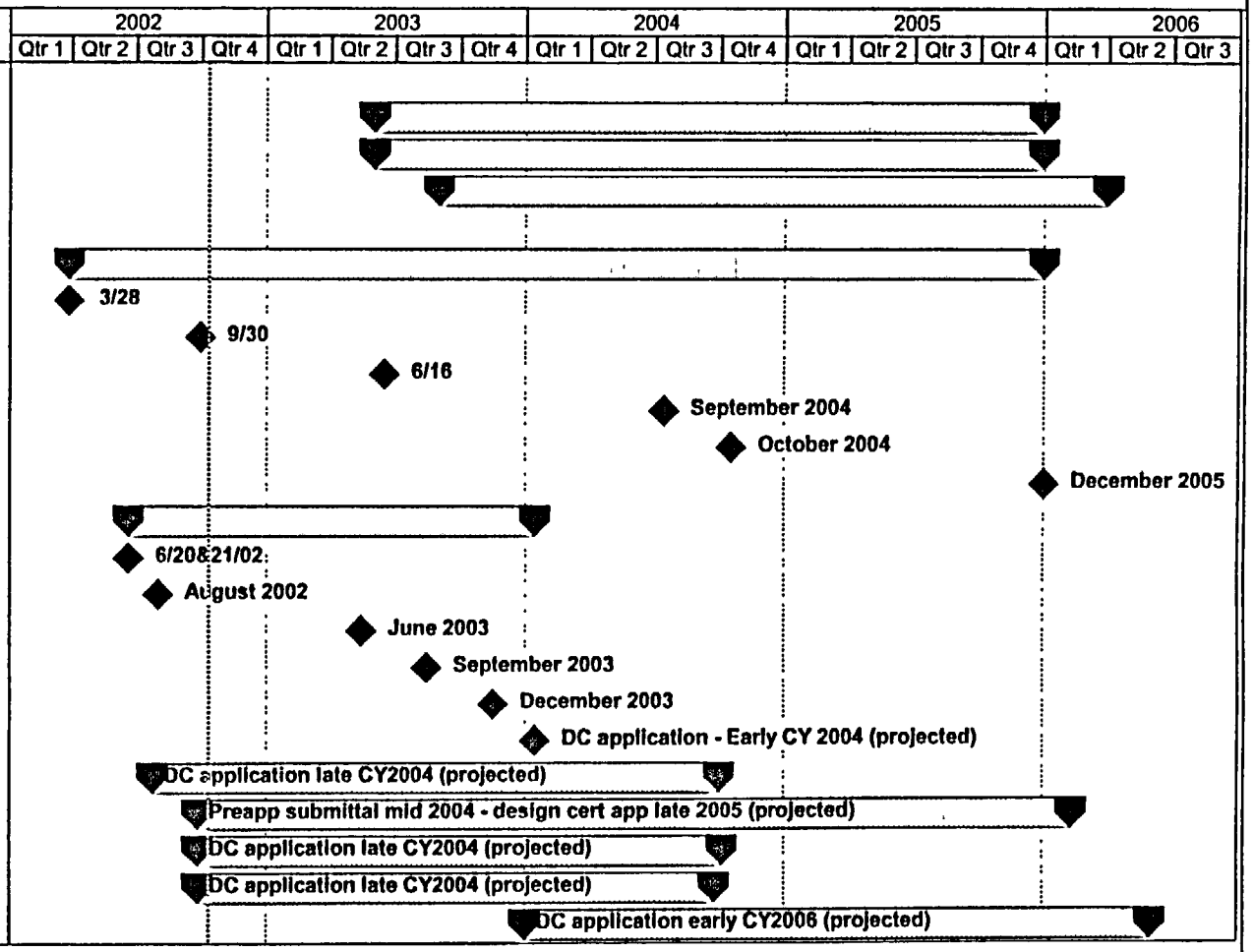

Risk Management Technical Specifications

Presentation to the Advisory Committee on Reactor Safeguards

November 7, 2002

Feedback from Subcommittees

- Graded approach to reliance on PRA capability OK, but……how is the scale being determined? Too much for too little?
- Need to guard against abuse – maintain awareness/oversight of patterns
- Continue to consider how initiatives interact

Future Interaction with ACRS

- Initiative 4b – Flexible Completion Times is the most demanding for PRA capability
- Draft guidance document and pilot application to be submitted in December 2002
- Propose to brief subcommittees on guidance and pilot amendment when received

Development

- Standard Technical Specifications – 1974
- NUREG-1024 - 1983
- Interim Policy Statement - 1987
- Improved Standard Technical Specifications – 1992
- Implementation of 50.65(a)(4) – 2000
- Risk Management Technical Specifications Initiatives – 1998 to Present

Principles

- Coherence with other risk-informed regulation development
- Licensee discretion commensurate with capability – graded approach to crediting 50.65(a)(4) program
- Involve staff with cognizance for inspection, maintenance, risk assessment and management

Initiative 1- End States

- Effect: Allow repair time in hot shutdown instead of requiring transition to cold shutdown
- Basis: CEOG and BWROG generic analysis of preferred mode for repair given equipment inoperable
- Status: CEOG safety evaluation complete, reviewing TSTF translation into standard tech spec changes; BWROG safety evaluation complete, TSTF in preparation.

Initiative 2 – Missed Surveillance Actions

- Effect: Extension of flexibility granted in Generic Letter 87-09, allow up to one surveillance interval to make up inadvertent missed/incomplete surveillance
- Basis: Infrequent use, likelihood that equipment is operable, entry into corrective action program, assess and manage risk of delay as extension of (a) (4) program (treat as emergent condition)
- Status: 47 plants have adopted, 21 requests in process

Initiative 3 – Mode Flexibility

- Effect: Extension of flexibility granted in Generic Letter 87-09, allow mode transition up in power with inoperable equipment, relying on compliance with TS actions in higher mode
- Basis: Infrequent use, generic risk analysis ruling out some transitions, 50.65(a)(4) assessment and management of risk, oversight of 50.65(a)(4)
- Status: Resolving comments on FRN published August 2, 2002

Initiative 4 – Flexible Completion Times

- Effect: Extend completion time from a nominal value up to a predetermined "backstop" maximum using configuration risk management
- Basis: Under development, to include requirements for PRA technical adequacy, real-time quantitative capability, configuration and cumulative risk metrics
- Status: Industry writing detailed guidance paper for staff review, identifying plants for pilot amendments.

Initiative 5 – Relocation of Surveillance Test Intervals

- Effect: Requirement to perform surveillance remains in TS, frequency adjusted by licensee program (required by TS) using staff-approved methods
- Basis: Review of methods, PRA technical adequacy
- Status: Industry preparing guidance document and draft methodology, expect to use a pilot plant

Initiative 6 – Shutdown Tracks

- Effect: Risk-inform shutdown completion times for loss of function within an LCO
- Basis: CEOG quantitative bounding risk analysis
- Status: CEOG topical under review

Initiative 7 – Risk-Informing Support Equipment Impact

- Effect: Allow a TS train to be considered operable up to a maximum time with degraded non-TS design support features (barriers and snubbers)
- Basis: Generic calculation showing low risk due to low initiator frequency (internal flood, seismic event)
- Status: Staff reviewing draft proposal

Initiative 8 – Risk-Informing TS Scope

- Effect: (a) Allow relocation of LCOs not meeting any 50.36 criteria, including criterion on risk significance, (b) Limit scope of TS to risk-significant SSCs
- Basis: Adaptation/adoption of categorization approach from Option 2, generic analysis, PRA technical adequacy
- Status: (a) Industry preparing paper for staff review, (b) Requires rulemaking, schedule TBD