Section 7 - Periodic Field Tests & Troubleshooting

Troubleshooting

WARNING

Extreme care must be used when troubleshooting a system that has power applied. All standard troubleshooting precautions apply.

WARNING

Once a problem has been located, remove all power before continuing with the repair.

CAUTION

Personnel performing the troubleshooting/repair must be qualified to ANSI 45.2.6, 1978, Skill Level II.

Personnel performing the following procedure must be familiar with the operation of the monitoring system and the location of each piece of equipment used in the system.

NOTE

Improper set point entry can discontinue UDR operation. This includes the alarm set point, underrange set point, overrange set point, analog output low scale value, and analog output high scale value.

i.e., If the HI alarm set point is entered above the overrange set point, the UDR will display error Message E0002.

If a problem develops, verify that the voltages at connection point inputs and outputs are present and that all wiring is secure, for both the detector and UDR. Refer to Appendix B and C for drawings and parts lists. If a PROM requires replacement, specify the PROM part number, PROM revision letter, and unit model number. The PROM part number and revision is marked on a label attached to the top surface of the PROM. Refer to Section 6 for calibration and electronic adjustments.

Troubleshooting is required for the detector/preamplifier when the measured output of the test source shows a marked change in the count rate observed at the UDR while high voltage remains constant, or when an error code is displayed on the UDR. Check for visible signs of physical damage.

A fault that cannot be isolated to the detector/preamplifier must be in the wiring between the detector/preamplifier and the UDR, or in the UDR itself.

If the fault has been isolated to the detector preamplifier, the unit should be returned to Victoreen, Inc. for repair and recalibration on an NIST traceable calibration range. If desired, the following procedure, along with the applicable drawings, may be used to identify the faulty component. The high voltage power supply should be disconnected at this time. The UDR is to remain connected to provide the low voltage power supply and proper termination of the preamplifier. If the fault is isolated to the UDR, the UDR should be returned to Victoreen, Inc. for repair. To troubleshoot the UDR, a test PROM and special test set, P/N 942TS-100, is required.

Refer to Appendix B and C for all applicable schematics ,drawings, TP locations, and bill of materials.

Periodic Field Test

WARNING

There is 120 VAC present at the low voltage DC power supply and 600 VDC at the high voltage power supply P.C. board. Use extreme care when performing the following tests.

The following tests may be performed on the UDR to check its operation. In addition to these tests, alarm circuit and relay operation may be verified via use of a field test source, or the detector check source. Resetting of the alarm trip points to a level before the expected response may be required to perform this test.

Equipment Required

Digital voltmeter
Small flat blade screwdriver
Signal generator

Test Procedure, 955A-XXYYZ System

Check Source Response

1. Depress and hold the Check Source pushbutton for approximately two (2) minutes. Record the average mR/h value displayed. The value displayed will normally be within ±25% of the value recorded on the factory data sheet. For slightly more precise data, subtract the ambient background value from the gross check source value.

2. Verify the following conditions are met for proper check source operation:
   a. Properly connected detector to 956A-201 UDR
   b. +15 VDC power is present from the 956A-201 UDR
   c. Proper discriminator adjustment in the 956A-201 UDR
   d. Proper GM tube high voltage is supplied from the 956A-201 UDR
   e. Fully functional detector preamplifier (located within the detector outer housing)
   f. Fully functional GM tube (located within the GM detector housing)

Note:
Item (a) may be verified by physical inspection of the detector to 956A-201 UDR interconnecting cable.

Items (b - d) may be verified by the 956A-201 UDR readout tests provided herein.

Items (e - f) require return of the detector assembly to Victoreen, Inc. for repair and recalibration.

3. For ALARA considerations, disassembly of the detector to observe, or attempt to correct check source operation is not recommended. There are no user serviceable parts on the check source mechanism.

DC Voltage Checks, 956A-201 UDR

1. Using a digital voltmeter set to read DC volts, measure the voltages listed in Table 7-1.

Table 7-1. DC Voltage Test Points

Test Point	DC Power Supply Voltages	Potentiometer
TB-1	-15 VDC, ± 0.75 V	N/A
TB-2	Ground DC	N/A
TB-3	Ground DC	N/A
*TB-4	+5.0 VDC, ± 0.10 V	VR1 (or power supply)
TB-5	+15 VDC, ± 0.75 V	N/A

* The only adjustable voltage is the +5.0 VDC supply. The other voltages are regulated by the +5.0 VDC supply. If the +5.0 VDC supply is out of tolerance, adjust VR 1 on the power supply

2. If any voltage does not meet the tolerance after adjusting the +5.0 VDC supply, the unit should be returned to Victoreen, Inc. for replacement of the DC power supply.

Discriminator Check, 956A-201 UDR

1. Set the digital voltmeter to DC Volts and measure the upper and lower discriminator voltages using the values listed in Table 7-2. below.

Table 7-2. Discriminator Test Points

Test Point	Description	Expected Voltage	Potentiometer
GND	Ground	N/A	N/A
LO	Low Discriminator	0.500 VDC ± .05 V	VR11
HI	High Discriminator	7.000 VDC ± .100 V	VR10

2. If either voltage is out of tolerance, it may be brought into tolerance by adjusting the appropriate potentiometer.

3. If the proper adjustments can not be achieved, return the unit to Victoreen, Inc. for repair.

High Voltage Check, 956A-201 UDR

1. With the digital voltmeter set to read DC voltage, measure the detector high voltage as listed in Table 7-3 below.

Table 7-3. High Voltage Test Points

Test Point	Description	Expected Voltage	Potentiometer
GND	Ground	N/A	N/A
HV Test	HV, 1000:1	897A-210 0.550 V ±.01 VDC 897A-220 0.575 V ±.01 VDC 897A-230 0.550 V ±.01 VDC	R5 R5 R5

2. If the 1000:1 voltage is out of tolerance, adjust R5 as required.

3. If the proper HV adjustment can not be achieved, return the unit to Victoreen, Inc. for repair.

Analog Output Check, 956A-201 UDR

1. To adjust the low scale output, enter 1.00E2 into setpoint 7; Analog Low Scale setpoint.

2. Adjust the appropriate zero adjust potentiometer as listed in Table 7-4 below as required. The output signals may be measured at the terminals as listed in Table 7-5 below.

Table 7-4. Analog Output Test Points

Description	Expected Output	Potentiometer
0-10 V Output. Zero	0.00 V ± 0.01 V	VR1
0-10 V Output Span	10.00 V ± 0.01 V	VR2
4-20 mA Output #1, Zero	4.00 mA ± 0.05 MA	VR7
4-20 mA Output #1, Span	20.00 mA ± 0.05 MA	VR4
4-20 mA Output #2, Zero	4.00 mA ± 0.05 MA	VR6
4-20 mA Output #2, Span	20.00 mA ± 0.05 MA	VR5

Table 7-5. Analog Output Test Terminals

Description	Terminals
0-10 V Output (+)	P6-5
0 -10 V Output (-)	P6-6
4-20 mA Output #1 (+)	P6-1
4-20 mA Output #1 (-)	P6-2
4-20 mA Output #2 (+)	P6-3
4-20 mA Output #2 (-)	P6-4

3. Return the setpoint to its normal value.

4. To adjust the Analog Full Scale setpoint, enter 1.00E-1 into setpoint 5, Analog Output Full Scale setpoint.

5. Adjust the appropriate full scale adjust potentiometer per the Analog Output Test Points table shown above as required. The output signal may be measured at the terminals listed in the Analog Output Test Terminals table shown above.

6. Return Setpoint 3 to its normal value.

7. If adjustments are required, repeat steps 1 through 6 as required to ensure both measurements remain within the required tolerance.

8. When a local indicator is provided, the mechanical meter zero adjustment screw may be adjusted to obtain a true "zero" reading. (The power to the readout should be turned off to obtain a true zero).

9. To adjust the full scale response of the local indicator, repeat steps 4 through 6. Potentiometer R1, located inside the local indicator enclosure, may be adjusted as required to obtain full scale meter deflection.

10. If the proper voltages can not be achieved, return the unit to Victoreen, Inc. for repair.

Counter Test

1. Set-up signal generator as follows:
   a. Square Wave pulse
   b. 1 Volt peak positive pulse
   c. DC offset: at ground reference
   d. 10 Hz

2. Connect the signal generator to connector J5 on the 956A readout.

3. Set the conversion constant on the readout, function switch position 5, to 1.00E0.

4. Adjust the signal generator to the following frequencies and verify the 956A readout display.

Signal Generator Output	956A Readout Display Value
0.01 Hz	.600 mR/h ±5%
0.10 Hz	6.00 mR/h ±5%
1.00 Hz	60.0 mR/h ±5%
10.0 Hz	.600 R/h ±5%
100.0 Hz	6.00 R/h ±5%
1000.0 Hz	60.0 R/h ±5%

897A-2XX GM Detector Test

The only field test to verify Gm Detector and preamplifier operation is the check source test described earlier for the 955A-XX-YY-Z system.

Detector Troubleshooting

The following section describes the internal adjustments and troubleshooting information for the 897A Detector. Since internal adjustments or component replacement will usually require detector calibration on a NIST range, field disassembly and troubleshooting is not recommended.

Detector Disassembly (Factory only)

WARNING

An 8 µCi chlorine Cl-36 radio active check source is mounted inside of the check source housing. Safety glasses must be worn to protect the eyes when close visual contact with the preamplifier circuit board is necessary. Consult the facility radiation safety officer prior to disassembly of the detector to ensure the appropriate radiation safety procedures are observed.

WARNING

Ensure that the detector power has been removed prior to disassembly.

1. Disconnect the interconnection cable at the detector.
2. Remove the six screws around the circumference of the housing.
3. Extract the preamplifier assembly, taking care no to damage the detector housing gasket.

Detector Assembly (Factory only)

1. Place the preamplifier assembly in the protective housing and re-align the detector housing gasket. Replace gasket if damaged or brittle.
2. Replace the screws around the circumference of the housing.
3. Connect the interconnection cable.

Discriminator Setpoint Adjustment (Factory Adjustment Only)

This adjustment provides discrimination of input pulses which are below a user specified value. The nominal setpoint value (factory set) is +0.5 Vdc. If a value other than +0.5 Vdc is desired, adjustment can be made by connecting a DVM to the node of R38 - R39 (+) and R44 (-). Turn potentiometer R44 to the level of pulse discrimination. The adjustment is then complete.

HV Power Supply Adjustment

R5 adjusts the detector high voltage, and the HV test jack allows a 1000:1 voltage measurement to be read. For the Model 956A-201 Universal Digital Ratemeter, refer to the appropriate detector calibration data sheet included with each detector for specific high voltage settings.

Anti-jam Setpoint Adjustment (Factory Adjustment Only)

When the detector is used in a digital system, the parameters (dead time correction, count conversion, and anti-jam setpoint) are determined during factory calibration. Therefore, no customer adjustments are required. If the GM tube fails, the detector must be returned to the factory for repair and re-calibration.

DC Power Supply, Detector (Factory Test Only)

WARNING

AC voltage is present on the printed circuit board (pads J & H). Exercise caution when making measurements near this area.

1. With cable connected to the UDR, turn on the UDR to provide a low voltage power supply to the detector. High voltage is to be disconnected.

2. Using a DVM, measure the voltage at pad A (+ DC input Voltage) and pad c; chassis ground (-). The reading should be +10 Vdc (analog readouts) or +15 Vdc (digital readouts). If proper voltage is obtained, measure the voltage present across C1. The reading should be 10 Vdc ± 0.2 V for the 10 volt power supply. If channel power is 15 Vdc and the reading obtained in this step is greater than +10.5 V, check jumper J3 for proper placement (i.e. A/B, 15 V; B/C, 10 V). If voltage is not present at pad A, remove the connector at the detector and inspect the cable assembly for broken or cut wires.

3. Measure the +15 Vdc power supply at the UDR to ensure that the UDR is functional. If not, refer to the applicable drawings for the UDR so that the appropriate troubleshooting procedure can be used.

4. If +10 V is not present across capacitor C1, preamplifier circuitry failure has occurred. Using the schematic diagram as a guide, analyze and replace the faulty components.

Signal Transmission, Detector (Factory Test Only)

WARNING

High voltage is to be disconnected for this procedure. Channel power is to remain on. Refer to schematic 897A-210-13.

1. Using a DVM, measure the discriminator voltage between pin 9 and pin 8 of Z1. Zero to +2 V should be obtained by adjustment of R44. If not, zener diode CR11 or Z1 may be faulty.

2. Connect a pulse generator to the junction of R17-C10 and ground. Adjust the pulse generator output for a 50 microsecond pulse of -5 V amplitude with a frequency of 1 kHz.

3. Using an oscilloscope, verify pulse transmission. Pulses should be present at Z1 pin 14, R23, Z1 pin 7 and pad G. If not, locate the point where pulse transmission is terminated and replace the defective component.

CAUTION

Before continuing, measure the anti-jam set point voltage at pin 10 of Z1 and ground. Record this value. If a malfunction is found in this section, the faulty component should be replaced and the set point readjusted to its original value.

4. Remove the pulse generator. Connect a DC power supply across R25 (+) and ground (-). Connect a DVM at pin 13 of Z1. The output should be low. Increase the power supply slowly until pin 13 changes from the low to the high state. If this does not occur, Z1 is defective.

5. If the above output state change is present, connect the oscilloscope to pin 2 of Z1. A square-wave of approximately 50 kHz should be observed when the output of Z1, pin 13 is high. If not, isolate the faulty component and replace it.

6. Set the high voltage to the operating point of the G-M tube. Using an electrostatic voltmeter, measure the high voltage at the pad labeled HV with respect to chassis ground. If high voltage is not present, check for broken wiring or a high voltage supply failure at the UDR.

7. If all previous steps indicate the electronics are functional, the G-M tube needs replacement. This requires that the detector be sent to the factory for recalibration.

Check Source, Detector (Factory Test Only)

If the check source meter movement does not operate, perform the following steps.

NOTE

This test requires continuous activation of the check source control at the UDR.

1. Using a DVM, measure the DC line (+15 VDC) at pads J and H. If 15 VDC is not present, check cable connectors for broken wires. Detector pad H is on when the check source is actuated. Pad J is on when the check source is not actuated. Also determine if the check source circuitry at the UDR is functional.

2. If the DC voltage is available, the meter movement, with integral check source capsule should be replaced.

NOTE

The check source meter movement assembly contains an 8μCi, ^{36}Cl radioactive source. Consult your Radiation Safety Officer to ensure proper radiation safety procedures are observed when removing the radioactive source or meter assembly.

NOTE

If a problem cannot be resolved by using the drawings in the Appendix while applying the troubleshooting instructions found in this manual, or by performing the electronic adjustments in Section 6, please contact the Victoreen Customer Service Department at (216) 248-9300 for assistance.

Digital Ratemeter Troubleshooting

The digital ratemeter incorporates a multiwire main circuit board. Replacement of components on this board must only be performed by personnel familiar with this type of construction. The following describes adjustments that may be performed to verify operation:

UDR Electronic Adjustments

Analog Output Adjustments (Refer to Periodic Field Test)

Signal Input DC Offset and Gain Adjustment (Factory Adjustment Only)

1. Disconnect the detector signal input.
2. Set the DVM to the 1 volt range.
3. Connect the positive lead of the DMV to TP-1 and the negative lead to the ground test jack.
4. Short the signal input connector on the rear panel (P5).
5. Adjust VR9 for a DVM reading of 0.000 volts.
6. Disconnect the DVM and connect an oscilloscope (to channel 2) positive lead to TP-1 and the negative lead to the ground test jack.
7. Disconnect the short on the signal connector, on the rear panel (P5).
8. Connect a signal generator to P5.
9. Connect an oscilloscope to channel 1 to monitor the signal generator output.
10. Adjust the signal generator output to obtain a 10 microsecond negative or positive going pulse (depending on input selection), with a +1 volt amplitude at a 1 kHz repetition rate.
11. Adjust VR8 to obtain unity gain. A +1 volt input should produce a +1 volt output pulse.

High and Low Discriminator Adjustments

The low discriminator should be set to +0.5 Vdc, while the high discriminator should be set to +7.0 Vdc unless otherwise specified in the detector calibration.

The following factory adjustments are included for general information and should not be performed in the field.

Anti-Jam Threshold Adjustment (Factory Adjustment Only)

This adjustment is dependent on the type of detector used. Potentiometer VR12 is used to adjust the DC level measured at R94. Table 7-6 shows the DC adjustment values necessary for each detector type unless otherwise specified.

Table 7-6. Anti-Jam Threshold Adjustment

Test Pulse Width	Detector Type	DC Value at R94	Equivalent mR/h		Jumper J7
10 microsecond (50 kHz square wave)	897A Series GM Detector Family	0.740V	897A-21X	3.16×10^3	2 to 3
			897A-22X	$2.14 \times x10^4$	
			897A-23X	2.50×10^5	

Write Cycle Clock Adjustment (Factory Adjustment Only)

1. Connect the channel 1 oscilloscope (x10 probe) to U19-2 (clock).
2. Connect the channel 2 oscilloscope (x10 probe) to U19-12 (short 02).
3. Adjust VR13 to obtain:

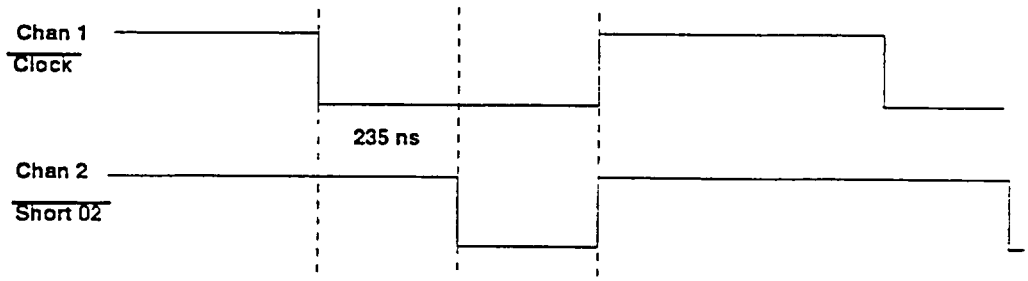

VICTOREEN, INC.	NUMBER MB95-1008	REVISION A
SECTION: MAINTENANCE BULLETIN	EFFECTIVE DATE	
SUBJECT: FIELD REPLACEMENT OF 897 SERIES BY 897A SERIES DETECTORS	NOVEMBER 8, 1995	
SUPERSEDES: NEW	PAGE 1 OF 15	

REVISION LIST

REV	DATE	TECHNICAL SUPPORT MANAGER		QUALITY ASSURANCE MANAGER			
		SIGN	DATE	SIGN	DATE	SIGN	DATE
A	11/08/95		11/14/95		1/15/96		

ISSUED BY: DAVID P. WARNER

RECORD OF REVISIONS

DOCUMENT REVISION LEVEL	DESCRIPTION/PAGES AFFECTED
A	ORIGINAL ISSUE

TABLE OF CONTENTS

SECTION	TITLE	PAGE
1.0	PURPOSE	4
2.0	SCOPE	4
3.0	RESPONSIBILITIES	6
4.0	REQUIRED EQUIPMENT	6
5.0	PROCEDURE	7
6.0	DETECTOR TERMINATION PROCEDURE	11
7.0	TEST PROCEDURE	13

FILE COPY

1.0 PURPOSE

The purpose of this Bulletin is to provide a procedure for the modifications required to a 956/956A series digital ratemeter whenever an existing 897 series detector is to be replaced by a 897A series detector on a previously installed monitoring channel. The modifications are required due to detector re-design which replaces the existing AC driven check source with a low voltage DC check source mechanism. In addition, the existing modular connector installed at the detector end of the field cable is replaced with a one-piece military style for increased reliability and environmental sealing.

2.0 SCOPE

The required modifications are as follows:

2.1 Internal wiring changes in the 956/956A series ratemeter to remove switched 120 VAC from the check source relay and substitute switched 15 VDC a required by the replacement detector. This modification is always required.

2.2 Re-position of connector pins in mating plug for 956/956A series ratemeter P2 (detector) connector. This modification is always required.

2.3 Connector replacement at the 897 detector end of the field cable to remove the existing modular connector and install the mating connector supplied with the replacement 897A series detector. This modification is always required.

2.4 Internal wiring changes in the 958 or 958A Remote Alarm/Meter to re-route check source wiring. This modification is only required when 958 or 958A series remote alarms are installed.

2.5 Existing detectors listed below are covered by this bulletin.

Aluminum Housing Detectors	Stainless Steel Housing Detectors	Operational Range	Check Source Activity/Isotope
897-210-5	897-211-5	0.01-1000 mR/h (Low)	0.3 µCi/Sr-90
897-220-5	897-221-5	0.1-10000 mR/h (Mid)	1.0 µCi/Sr-90
897-230-5	897-231-5	1-100000 mR/h (High)	8 µCi/SR-90

FILE COPY

2.6 Replacement detectors listed below are covered by this Bulletin.

Aluminum Housing Detectors	Stainless Steel Housing Detectors	Operational Range	Check Source Activity/Isotope
897-210-5	897-211-5	0.01-1000 mR/h (Low)	8 µCi/Cl-36
897-220-5	897-221-5	0.1-10000 mR/h (Mid)	8 µCi/Cl-90
897-230-5	897-231-5	1-100000 mR/h (High)	8 µCi/Cl-36

2.7 The three activity levels of Sr-90 provided as a check source in each of the three existing detector ranges has been replaced by a single, 8 uCi, Cl-36 source, enclosed in a hermetically sealed capsule. The replacement detector will provide a substantial increase in check source response on low and mid range monitoring channels when compared to the existing 897 series low and mid range detectors. If less response is desired, the GM tube capsule may be rotated to reduce the overall response to the check source.

Typically, the ^{36}Cl check source may be expected to provide a response between 50 and 300 mr/h, based upon the position of the GM tube Beta "window" relative to the actuated check source capsule position.

2.8 Seismic Test Reports 950.352 and 950.353 detail testing performed on specimen detectors containing the 857-210-30 check source mechanism provided in the replacement detectors. The replacement source (857-210-30) is classified per 10CFR32 as an exempt quantity and as such does not require an NRC license for possession when it is contained as part of the detector assembly.

2.9 This bulletin provides the required instructions for a technician to install, test and document the check source wiring and connector changes required when an existing 897 series detector is replaced with an 897A series detector.

3.0 RESPONSIBILITIES

Personnel performing this procedure require basic skills with hand tools, electronic soldering skills and the ability to take low voltage DC measurements.

4.0 EQUIPMENT REQUIRED

4.1 Digital Voltmeter (DVM) : Fluke 8020B or equivalent.

4.2 1/4" width flat blade screwdriver.

4.3 Wire strippers suitable for use with 18 and 22 GA Teflon wire.

4.4 Small wire cutters.

4.5 897AKIT: Field installation and modification kit.

4.6 Soldering iron: 50W max.

4.7 Electronic Solder: Kester "44" resin core s/n 60 alloy or equivalent.

4.8 #1 Phillips screwdriver.

4.9 1/4" Nut driver.

4.10 1/4" Ignition wrench or equivalent.

4.11 Cable cutters capable of shearing composite cable of up to 0.65" diameter.

4.12 Solder wick or solder removal suction bulb.

4.13 Factory Calibration Data Sheet for the replacement detector with conversion constant and dead-time (tau) values for entry into 956 / 956A ratemeter.

4.14 Loop Diagrams of channel wiring: 956A-201-106, 958-1-24 & 958A-1-24.

4.15 Detector Schematic 897A-210-13.

5.0 RATEMETER MODIFICATION PROCEDURE

5.1 Prior to turning off 956/956A ratemeter AC power, verify that all required personnel are aware that alarm actuation may occur depending on specific installation. Inform operators that alarm annunciation may occur. VERIFY that any control function that may occur is understood by all parties involved. Turn off ac power at the push-button switch on the front panel of the 956/956A ratemeter and disconnect external connections from the rear panel of the ratemeter. Disconnect the detector to be replaced.

5.2 Remove the 956/956A ratemeter from the rack chassis or enclosure by tuning the front panel pawl fastener counter-clockwise until the ratemeter can be withdrawn.

5.3 Remove the two screws located at each upper corner of the ratemeter rear panel. Remove the four screws retaining the power supply bracket and remove both upper frame rails by turning them counter-clockwise. Retain all hardware for re-installation.

5.4 Remove the connector plug from J2 on the relay board and remove the mounting hardware attaching the relay board to the power supply bracket. Retain all hardware for re-installation.

5.5 Unsolder the yellow/green wire from "B" of relay K2 (Check Source) and remove solder from the plated through hole so that new wiring may be inserted. Remove the female pin from position 12 of ratemeter rear panel connector P2 using the extraction tool supplied with the 897AKIT (AMP #305183, Victoreen P/N 99-37-1) and discard the yellow/green wire and pin.

5.6 Using the 6" section of white/red wire with the crimp pin attached (supplied with the 897AKIT), insert the female pin end into the rear panel connector P2-5. Insert the other end into the hole marked "B" at relay K2 on the relay board and solder.

5.7 Using the 6" section of red wire with the crimp pin attached (supplied with the 897AKIT), insert the female pin into the rear panel connector P2-4. Insert the

FILE COPY

other end of the red wire into the hole marked "C" at K2 on the relay board and solder.

5.8 Remove the yellow/blue wires and post from the hole marked "A" at relay K2 and remove solder from the plated through hole so that the new wire may be inserted.

5.9 Cut both yellow/blue wires off the post removed in step 5.8 and place the heat shrinkable tubing over either of the wires. Strip 1/2" of insulation off each wire and make a mechanical connection (splice) between the wires. Solder the connection and place the heat shrinkable tubing over the splice and apply heat until the tubing has conformed to the splice underneath.

5.10 Insert the red wire with ring lug attached (supplied with the 897AKIT) into the hole marked "A" at relay K2 on the relay board and solder.

5.11 Connect the ring lug end the wire installed in Step 5.10 to the terminal strip located on the power supply assembly with RED 18 GAUGE wires already connected to this point. This is the +15 VDC power supply terminal.

5.12 Affix the orange self-adhesive label, supplied with the 897AKIT, to the power supply bracket inner surface to the right of the model/serial number tag. The label identifies the ratemeter as modified to operate with 897A series detectors equipped with DC check source mechanisms.

5.13 Re-mount the relay board on the power supply bracket using the hardware removed in step 5.4. Plug the harness connector back into J2 on the relay board.

5.14 Re-install the ratemeter frame rails removed in step 5.3 taking care not to over-tighten them. The counter sunk holes for the power supply bracket mounting screws should be facing upwards. Replace the two screws attaching the frame rails to the rear panel.

5.15 Using the nylon wire ties supplied with the 897AKIT, dress the added wires into the harness so that no wires extend outside the chassis of the ratemeter.

5.16 Reconnect only the AC power connector to the ratemeter P3 connector on the rear panel. Depress the ratemeter front panel switch to turn the ratemeter on.

5.17 Place the digital voltmeter (DVM) on the 20 VDC range and measure the voltage present between P2-3 (-) and P2-4 (+). The voltage present should be +15 +/- 0.75 volts. Move the DVM positive lead to P2-5. There should be zero volts present. Record the results of this step on the attached modification and test data sheet.

5.18 Depress and hold the front panel CHECK SOURCE push button. Measure between P2-3 (-) and P2-4 (+). There should be zero volts present. Move the DVM positive lead to P2-5. The voltage present should be +15 +/- 0.75 volts. Record the results of this step on the attached modification and test data sheet. Turn OFF ratemeter when this step has been completed and remove the AC power plug from the ratemeter P3 connector.

5.19 Re-install the ratemeter into the rack chassis and tighten the front panel fastener pawl. Modification of the 956/956A series ratemeter is complete.

5.20 Locate the mating plug for rear panel connector P2 (Detector) on the 956/956A ratemeter. Remove the two screws from the back shell cable clamp on this connector and remove the back shell from the connector body by turning counter-clockwise. Use the P2 connector on the ratemeter to lock the connector while the back shell is being loosened. If no Remote Alarm (958/958A) is installed, complete the following steps 5.21.1 through 5.22.2. If a 958 or 958A Remote Alarm is installed on the channel, complete Step 5.22.

NOTE: Refer to figure 1 for usage of the Extractor Tool provided with the kit.

5.21 P2 Modification, No Remote Alarm.

5.21.1 Using the pin extractor (AMP #305183) provided in the 897AKIT, extract the existing pin and were from position 12 of the mating plug and re-insert it into position 4 of the plug.

5.21.2 Using the pin extractor, extract the existing pin and wire from position 13 of the mating plug and re-insert it into position 5 of the plug.

FILE COPY

5.22 P2 Modification, with 958/958A Remote Alarm.

5.22.1 For channels equipped with a Remote Alarm, an additional conductor is required between the ratemeter and 958/958A Remote Alarm. Additional pins are provided in the kit if it is necessary to re-terminate the P2 mating plug. Note the existing color or wire number used for each pin and record them. Trim back the external jacket of the cable until the length of the spare conductor(s) is 1/2 that of the terminated conductors. Select a spare conductor to be used and record its color or wire number. Trim any unused spares back to the jacket. Cut the terminated conductors to match the length of the selected spare and terminate all conductors with the male pins provided in the 897AKIT. Refer to Loop Diagrams 958-1-24 or 958A-1-24 provided with the 897AKIT.

5.22.2 Re-insert all terminated conductors back into the connector body as they were originally installed except the new spare conductor and the conductor that was removed from position 12.

5.22.3 Install the conductor that was removed from position 12 into position 4 of the P2 mating connector. Install the spare conductor into position 5 of the connector.

NOTE: Refer to the Loop Diagrams 958-1-24 or 958A-1-24 as necessary for the following steps. The 958A series of remote alarms may be identified by a "Silence" push button located on the face of the remote alarm. 958 series alarms do not utilize the "Silence" feature.

5.22.4 Open the 958/958A enclosure and locate the field cable coming from the 956/956A ratemeter. Locate the spare conductor selected in 5.21B and terminate with a ring crimp lug from the 897AKIT. Locate the cable going from the remote alarm to the detectors and terminate with ring lug the same color or wire number conductor as was used from ratemeter to remote alarm.

FILE COPY

5.22.5 For 958 remote alarms, place the two wires terminated in step 5.24B on TB2-2 in the remote alarm enclosure. For 958A remote alarms, place the wires on TB1-1.

5.22.6 For 958 remote alarms, moved both wires currently on TB1-10 to TB1-1. For 958A remote alarms, move the wires from TB1-1 to TB2-3.

5.23 Re-assemble the connector and backshell at the 956/956A ratemeter and replace the cable clamp. Insert the re-assembled mating plug into ratemeter connector P2 (Detector). Install remaining P1-P6 connectors removed in Step 5.1.

6.0 DETECTOR TERMINATION PROCEDURE

6.1 Remove the detector to be replaced from the wall mounting bracket. With the field cable still connected to the detector, unscrew (CCW) the cable clamp at the rear of the connector and slide the clamp, spring and internal bushing up the field cable. Unscrew the connector back shell (CCW) from the connector body and slide it up the field cable.

6.2 Record the conductor color or number and the connector pin number each is associated with. Note that the thicker of the two visible coaxial cables is utilized for high voltage and will be connected to pin 10 (center pin) of the existing connector. The smaller diameter coaxial cable is the signal and is connected to pin 19 of the existing connector.

6.3 After the conductor color or number and the existing connector pin numbers have been recorded, unscrew the connector from the detector and pull out the plastic insert from the connector body. When the plastic insert has been exposed, pull the two pieces of the insert apart so that the individual pins are visible.

6.4 Pull each conductor and pin one at a time from the connector insert until all have been removed. Remove all pieces of the existing connector from the field cable and discard them.

6.5 Install the cable clamp and back shell supplied with the replacement 897A detector over the field cable. If Victoreen P/N 50-100 cable was not supplied, install any cable boots needed to build up cable diameter.

6.6 Unsolder all of the existing pins from the field cable and discard the pins.

6.7 Cut the heat-shrinkable tubing supplied with the 897AKIT into six pieces of approximately 3/8 " in length and place the tubing over each conductor.

6.8 Solder each of the conductors to the new connector body in accordance with the table below. When soldering is complete, slide the tubing down over the solder cup on the connector and heat shrink.

Old Connector Pin Number	New Connector Pin Letter	Designation
10	E	High Voltage (large dia. coax)
19	G	Signal (small dia. coax)
16	K	Signal Ground (shield of small coax)
"GND SYMBOL"	K	DC Ground
17	C	+15 Vdc Supply
7	H	Check Source
3	J	Check Source

6.9 Carefully screw the terminated connector into the replacement 897A detector and with the field cable held so that it does not turn, assemble and tighten the back shell and cable clamp. Tighten the clamp so that the field cable is firmly gripped. Remove the connector from the detector when completed so that the complete channel wiring may be verified prior to detector connection.

FILE COPY

7.0 TEST PROCEDURE

7.1 With all connectors except P1 connected to the ratemeter, turn on ratemeter at the front panel power switch and verify the table below. Record verification on the attached modification and data sheet. Use caution as high voltage (600 VDC max.) is present on the connector.

Connector Pin	Voltage Present
E	550 Volts 897A-23X 575 V, 897A-22X, 897A-21X
G	Nominally Zero
K	Zero (Ground)
C	+15 +/- 0.75 volts
H	+15 +/- 0.75 volts
J	Nominally Zero

7.2 Depress and hold the 956/956A CHECK SOURCE push button and verify the following table. Record the verification on the Modification and Data Sheet.

Connector Pin	Voltage Present
H	Nominally Zero
J	+15 +/- 0.75 Volts

7.3 Enter the new conversion constant value supplied with replacement detector into the 956/956A ratemeter (ratemeter function switch position #5) and record on the Data Sheet.

7.4 Enter the new dead time (tau) value supplied with the replacement detector into the 956/956A ratemeter (ratemeter function switch position #2) and record on the Data Sheet.

7.5 Turn off 956/956A ratemeter power and mount and connect the replacement detector in the final installed location. Reconnect P1 at the ratemeter rear panel and turn on ratemeter power.

FILE COPY

7.6 After the detector has settled, note and record the background level on the data sheet. The background level with no radiation present may be slightly lower with the replacement detector then previously noted as the operation check source utilized does not contribute to induced detector background.

7.7 Depress and hold the ratemeter CHECK SOURCE push button. Note and record the value displayed on the data sheet. The value noted will in most cases be high than the value noted with the old detector as the replacement source activity is greater and yields higher countrate per microcurie of activity.

7.8 Verify all alarms are cleared. The channel may be returned to service at this time or additional site specific testing may be performed prior to return to service.

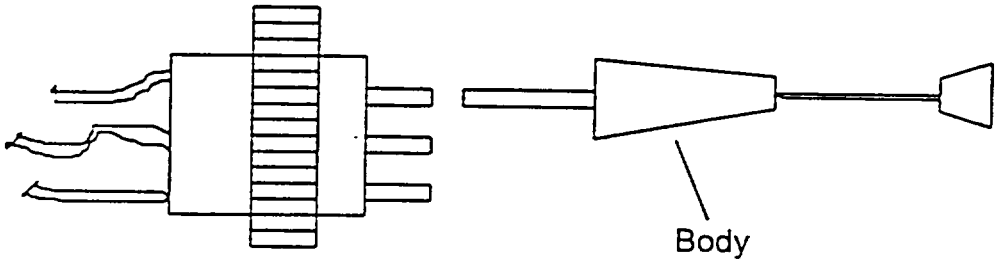

FIGURE 1

Insert Extract Tool over Pin to be removed while gripping body. When tool has bottomed in connector, depress plunger to eject pin and conductor for connector.

FILE COPY

Modification and Test Data Sheet

897A Replacement Detector Installation

Customer: _____ Facility: _____

Ratemeter Model: _____ Serial No.: _____

Remote Alarm Model: _____ Serial No.: _____

Replacement Detector Model: _____ Serial No.: _____

Ratemeter Modification Verification

5.17 Check Source OFF
P2-3 to P2-4 _____ (+15 +/- 0.75 volts) P-3 to P2-5 _____ (nom. zero volts)

5.18 Check Source ON
P2-3 to P2-4 _____ (nom. zero volts) P2-3 to P2-5 _____ (+15 +/-0.75 volts)

Detector Field Connector Verification

7.1 Pin E _____ (550 to 600 volts depending on channel)
Pin G _____ (Nominally zero volts)
Pin K _____ (Zero volts - ground)
Pin C _____ (+15 +/- 0.75 volts)
Pin H _____ (+15 +/- 0.75 volts)
Pin J _____ (Nominally zero volts)

Check Source ON Connector Verification

7.2 Pin H _____ (Nominally Zero Volts)
Pin J _____ (+15 +/- 0.75 volts)

7.3 Conversion Constant _____

7.4 Dead Time (Tau) _____

7.6 Background value --
Check Source OFF _____ mR/h

7.7 Check Source Response _____ mR/h

Performed By: _____ Date: _____

Review By: _____ Date: _____

FILE COPY

Appendix B. - Applicable Drawings

Drawing No.	Description
Gel 897A-2X0	Detector Dimensional Outline
897A-TAB-5	Detector Main Assembly, Stainless Steel Housing
897A-TAB-5A	Detector Main Assembly, Aluminum Housing
843-6-26	Wall Support, Detector
897A-211-30	Check Source MTG Assembly
857-210-30	Check Source Assembly
897A-210-10	PC Board Assembly
857-210-20	Tube Assy, Low Range
857-220-20	Tube Assy, Medium Range
857-230-20	Tube Assy, High Range
897A-210-13	Schematic, Detector
Gel 897A-2X1	Detector Dimensional Outline
857-211-18	Bracket, Detector
857-211-20	Tube Assy, Low Range
857-221-20	Tube Assy, Medium Range
857-231-20	Tube Assy, High Range
956A-201-106	Loop Diagram
958-1-24	Interconnection Diagram, Local Alarm
958A-1-24	Interconnection Diagram, Local Alarm
956A-201-GEL	Dimensional Outline, Readout
956A-201-5	Assembly, Digital Readout
956A-100-20	Assembly, Front Panel
956-100-15	Assembly, Front Panel PC Board
942A-100-30	Assembly, Rear Panel
956A-201-55	Assembly, Power Supply
942A-100-70A	Harness Assembly
942-100-70	Assembly, Relay PC Board
942-200-50	Power Supply
956-200-10	Main PC Board Assembly
942-200-60	Assembly, High Voltage Board
942-100-35A	Harness, Power Supply
942-100-35B	Harness, Main PC Board to Relay Board
942A-100-35C	Harness, Analog output
942-100-35D	Harness, Detector Power Supply
942-100-35E	Harness, AC Power
GEL 948-1	Dimensional Outline, 3-Bay Chassis
948-3-5	Table top Mounting Enclosure
948-9-5	Panel Mount Enclosure
948A-2-5	Blank Panel Assembly
Gel-948-10	Panel Adapter, Dimensional Outline
50-100-TAB	Multi-conductor Cable
848-8-105	Test Fixture Adapter
848-8-400	Test Fixture Adapter, Stainless Steel
GEL-958A	Dimensional Outline - Remote Alarm
MB95-1008	Maintenance Bulletin, Check Source Replacement

REV	DESCRIPTION	DATE	PREPARED
B	REV PER 9CR28-95	11-14-95	bh

NOTES

1 FOR AREA MONITORING APPLICATIONS, USE WALL MOUNTING BRACKET SUPPLIED
LOCATE DETECTOR ABOVE NORMAL HEAD HEIGHT
ORIENT DETECTOR VERTICALLY, WITH CONNECTOR FACING UP,
AND GM TUBE FACING THE AREA TO BE MONITORED

2 APPROXIMATE WEIGHT AS SHOWN 3 2 LBS

3 RECOMMENDED MTG HARDWARE QTY 4, 1/4-20 GRADE 5 (MIN) BOLTS

4 RADIOACTIVE OPERATIONAL CHECK SOURCE: 8uCI, CI-36

5 G.M TUBE CENTER LINE INSIDE HOUSING.

6 WALL BRACKET INSTALLED WITH STOPS POSITIONED AT BOTTOM OF BRACKET.

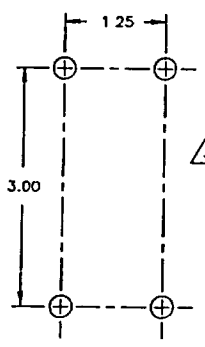

DRILLING TEMPLATE FOR
843-6-26 WALL
MOUNTING BRACKET

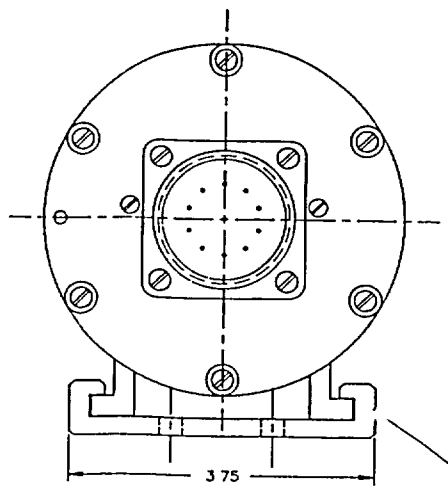

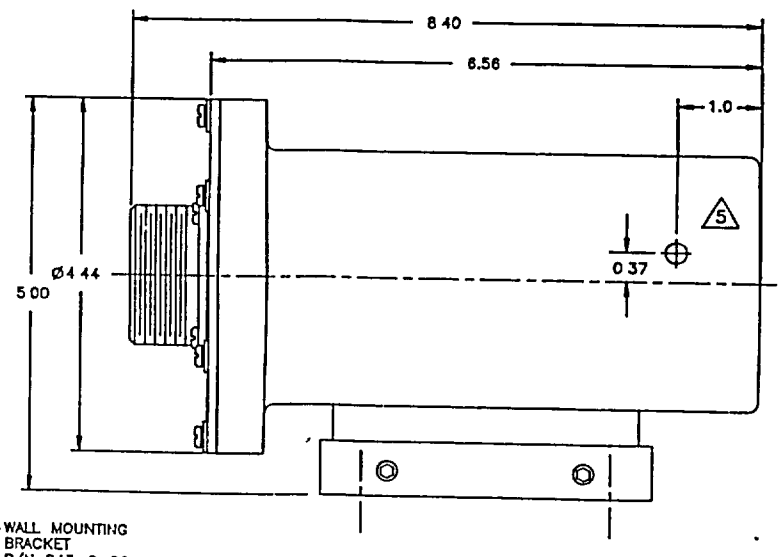

WALL MOUNTING
BRACKET
P/N 843-6-26

GEL897A-2X0 1 B

COMPUTER GENERATED DRAWING ALL CHANGES MUST BE MADE TO COMPUTER DATA BASE AUTOCAD RELEASE 10	
DWG NO STD-344	FILE NAME 897A-2X0

UNLESS OTHERWISE SPECIFIED DIMENSIONS ARE IN INCHES TOLERANCES ARE.

DECIMALS	ANGLES	FINISH
.XX=± .015	± 1°	125
.XXX=± .005	±	

REMOVE ALL BURRS & BREAK SHARP EDGES .005 TO .015

NEXT ASSEMBLY USED ON

MATERIAL

FINISH

DRAWN WT	3-3-95	
CHECKED ZRA	1-15-96	
ENGR CWJ	11/27/95	
APPROVED N/A		
MFG APPROVED	1/15/96	

VICTOREEN, INC.
6000 COCHRAN RD., SOLON, OHIO 44139

TITLE DIMENSIONAL OUTLINE-
GM DETECTOR

SIZE	CAGE NO	DWG NO	REV
C	63060	GEL897A-2X0	B

SCALE N/A DO NOT SCALE SHEET 1 OF 1

897A-TAB-5 | 1 | B

REV	DESCRIPTION	DATE	CHECKED
B	REV PER DCR28-95	11-14-95	

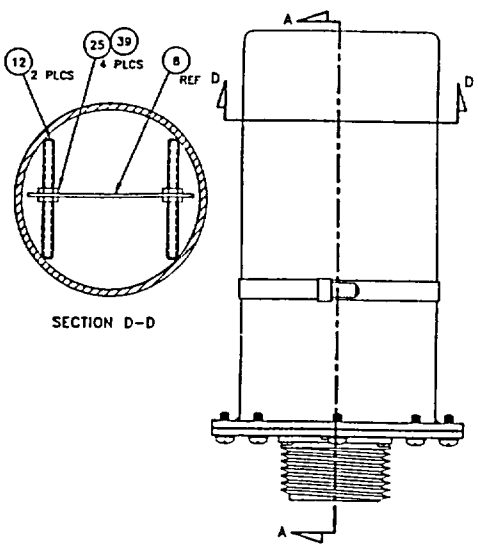

SECTION D-D

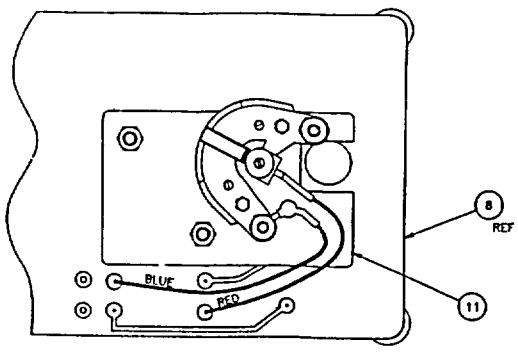

VIEW C-C

SOLDER SIDE
NO SCALE

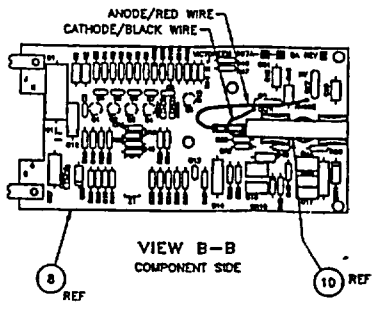

VIEW B-B

COMPONENT SIDE

FROM PCB	TO CONN PIN	WIRE COLOR
A	C	WHT/RED
G	G	WHT/GRN
H	H	RED
J	J	BLACK
HV	E	HV WIRE
K	K & LUG	GREEN

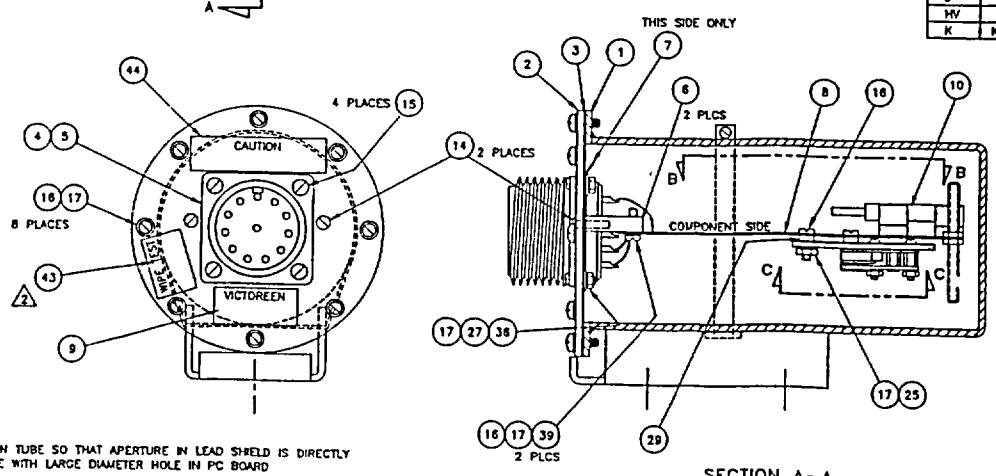

SECTION A-A

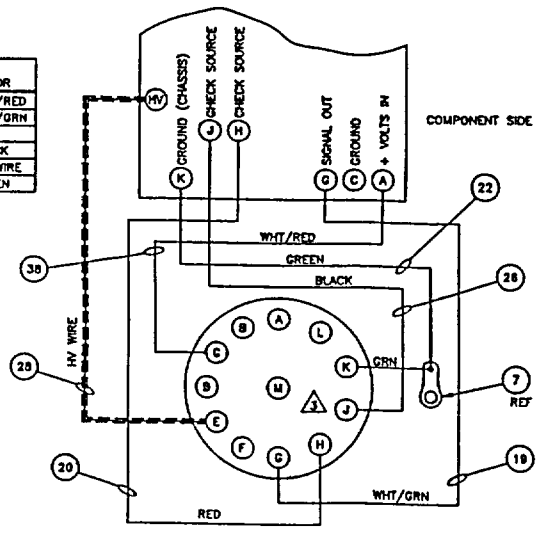

WIRING DIAGRAM

NO SCALE

NOTES

1. POSITION TUBE SO THAT APERTURE IN LEAD SHIELD IS DIRECTLY IN LINE WITH LARGE DIAMETER HOLE IN PC BOARD
2. ITEMS 43 AND 44 ARE SUPPLIED WITH CHECK SOURCE ASSEMBLY AND ARE COMPLETED BY RADIATION SAFETY TECHNICIANS
3. TUBING (ITEM 18) IS TO BE USED ON ALL WIRES AT CONNECTOR, COVERING SOLDER CUP
4. FUNCTIONALITY TEST TO BE PERFORMED PER TP897A. SOURCE RANGE CALIBRATION PER PROCEDURE CAL-CU6

UNLESS OTHERWISE SPECIFIED DIMENSIONS ARE IN INCHES TOLERANCES ARE:
DECIMALS .XX=±.015 .XXX=±.005 ANGLES ±1 DEG FINISH 125
REMOVE ALL BURRS & BREAK SHARP EDGES .005 TO .010

COMPUTER GENERATED DRAWING
DWG NO STD-344 FILE NAME TAB-5
MATERIAL
FINISH

NEXT ASSEMBLY	USED ON
WT	2-16-95
ZEA	1-5-96
JW	1/19/96
N/A	
CAL	1/19/96

VICTOREEN, INC.
6000 COCHRAN RD., SOLON, OHIO 44139

TITLE
DETECTOR MAIN ASSEMBLY
STAINLESS STEEL HOUSING

SIZE D | CODE IDENT NO 63060 | DWG NO 897A-TAB-5 | REV B

SCALE n/a | DO NOT SCALE | SHEET 1 OF 1

897A-TAB-5A | 1 | 3

3	REVISED PER 2C87-99	3/3/99	JPJ

NOTES

1. POSITION TUBE SO THAT APERTURE IN LEAD SHIELD IS DIRECTLY IN LINE WITH LARGE DIAMETER HOLE IN P.C. BOARD
2. TUBING (ITEM 27) IS TO BE USED ON ALL WIRES AT CONNECTOR COVERING SOLDER CUP
3. GLUE INSULATOR PAD (ITEM 6) TO HOUSING BOTTOM USING SMALL AMOUNT OF CEMENT (ITEM 24)
4. FUNCTIONAL TEST TO BE PERFORMED PER TP897A. SOURCE RANGE CALIBRATION PER PROCEDURE CAL-0046
5. ITEMS 34 & 35 SUPPLIED WITH SOURCE ASSEMBLY 857A-211-30 APPLY TO COVER PLATE IN LOCATIONS SHOWN. NOTE THAT THESE LABELS HAVE INFORMATION COMPLETED AT TIME OF SOURCE FABRICATION
6. LOCATIONS FOR WIRE TERMINATIONON PCB NOT TO ACTUAL SCALE. REFER TO PCB SILK SCREEN FOR ACTUAL HOLE LOCATION

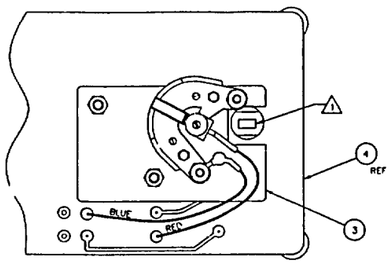

VIEW C–C
SOLDER SIDE
NO SCALE

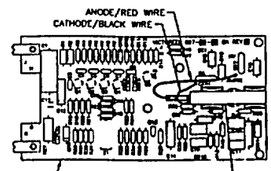

VIEW B–B
COMPONENT SIDE

FROM PCB	TO CONN PIN	WIRE COLOR
A	C	WHT/RED
G	G	WHT/GRN
M	M	RED
J	J	BLACK
HV	E	HV WIRE
K	K & LUG	GREEN

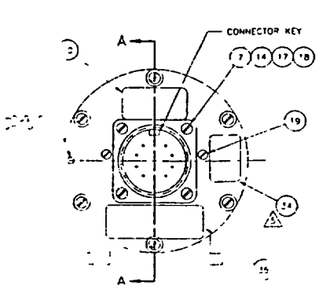

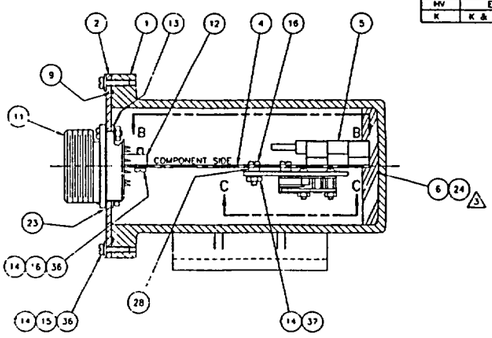

SECTION A–A

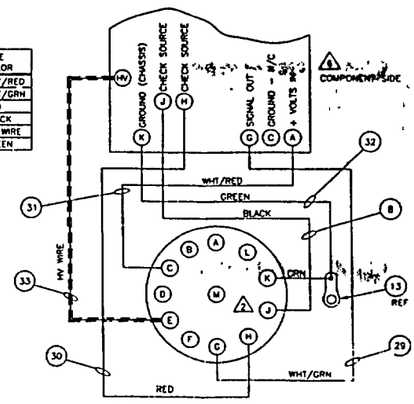

WIRING DIAGRAM
NO SCALE

UNLESS OTHERWISE SPECIFIED DIMENSIONS ARE IN INCHES TOLERANCES ARE	COMPUTER GENERATED DRAWING	NEXT ASSEMBLY USED ON	INOVISION RADIATION MEASUREMENTS 8045 COCHRAN RD., SOLON OHIO 44139
DECIMALS ANGLES FINISH		WT 2-28-95	DETECTOR MAIN ASS'Y ALUMINUM HOUSING
MATERIAL		DRAWN ARA 3 28 95	
FINISH		N/A	D 63060 897A-TAB-5A 3
REMOVE ALL BURRS & BREAK SHARP EDGES .005 TO .015			SCALE 1/1 DO NOT SCALE SHEET 1 OF 1

THIS DRAWING IS THE PROPERTY OF VICTOREEN INCORPORATED, NEITHER THE DRAWING, NOR REPRODUCTIONS OF IT, NOR INFORMATION DERIVED FROM IT IS TO BE GIVEN TO OTHERS. NO USE IS TO BE MADE OF IT WHICH IS, OR MAY BE INJURIOUS TO VICTOREEN INCORPORATED.

DWG NO 843-6-26 SH 1 REV B

REVISIONS

REV	DESCRIPTION	DATE	PREPARED
B	REV PER 4CR29-95	4-26-95	bh

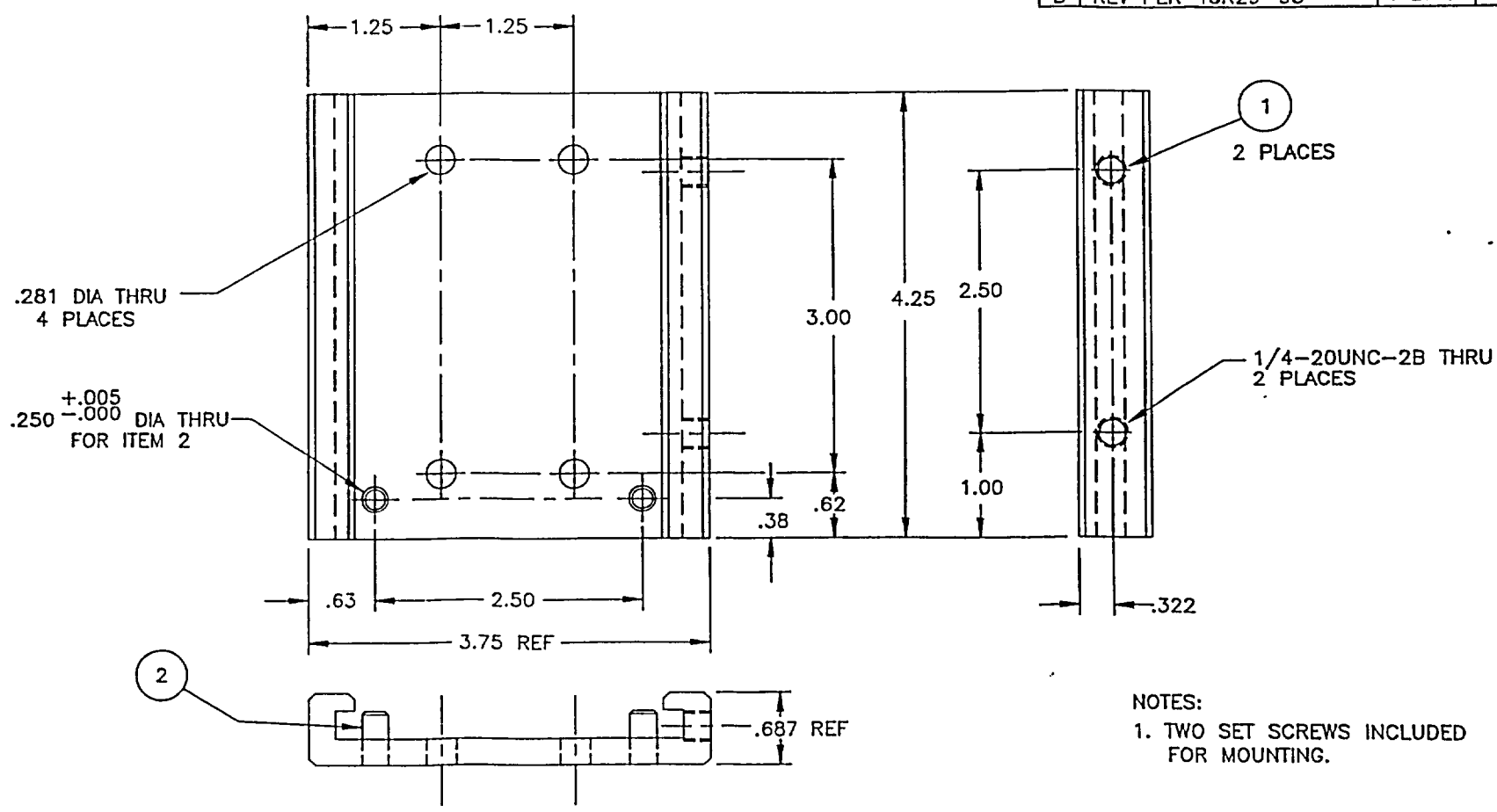

NOTES:

1. TWO SET SCREWS INCLUDED FOR MOUNTING.

COMPUTER GENERATED DRAWING
ALL CHANGES MUST BE MADE TO COMPUTER DATA BASE AUTOCAD RELEASE 10

DESK NO	FILE NAME
S-348	6-26

UNLESS OTHERWISE SPECIFIED DIMENSIONS ARE IN INCHES TOLERANCES ARE:

DECIMALS	ANGLES	FINISH
.XX=± .015	± 1 DEG	125
.XXX=± .005	±	

REMOVE ALL BURRS & BREAK SHARP EDGES .005 TO .015

NEXT ASSEMBLY USED ON

MATERIAL 847-1-6

FINISH

ORIGINATOR	bh	4-26-95
CHECKED	ARA	4-27-95
PROJ ENG	AdL	5-11-95
APPROVED	N/A	—
QA (OPT)		5/22/95

VICTOREEN, INC.
6000 COCHRAN RD., SOLON, OHIO 44139

TITLE SUPPORT DETECTOR WALL

SIZE	CAGE NO	DWG NO	REV
B	63060	843-6-26	B

SCALE 1/1 DO NOT SCALE SHEET 1 OF 1

REV	DESCRIPTION	DATE	PREPARED
B	REV PER DCR 4CR8-96	4-11-96	WT

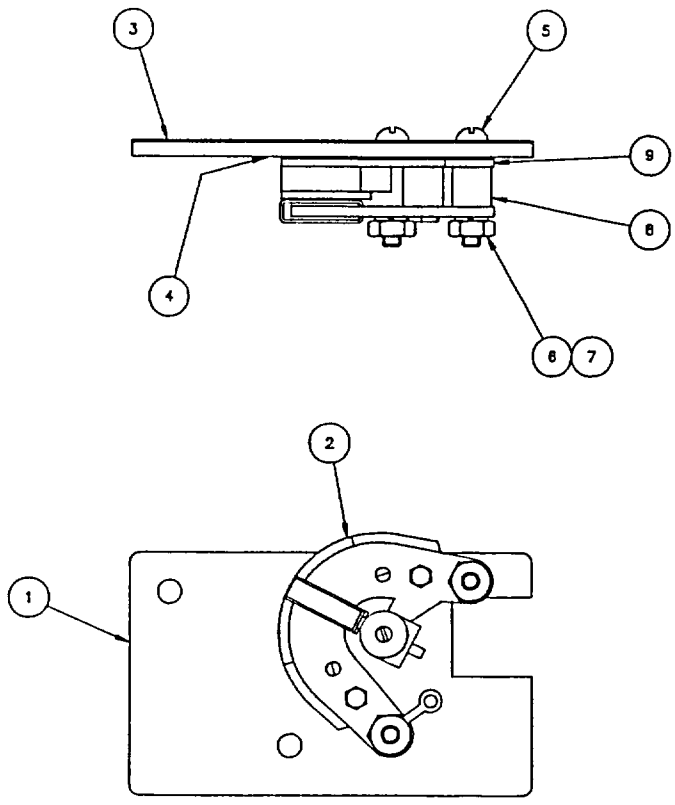

897A-211-30 1 B

COMPUTER GENERATED DRAWING
ALL CHANGES MUST BE MADE TO COMPUTER DATA. SEND AUTHORIZE RELEASE TO
DWG NO STD-344 FILE NAME A-211-30

UNLESS OTHERWISE SPECIFIED DIMENSIONS ARE IN INCHES TOLERANCES ARE.

DECIMALS	ANGLES	FINISH
.XX=± .015	± 1°	125
.XXX=± .005	±	

REMOVE ALL BURRS & BREAK SHARP EDGES .005 TO .015

NEXT ASSEMBLY USED ON
MATERIAL
FINISH

DRAWN WT 2-24-95
CHECKED
PROJ ENG
APPROVED
QA APPR

VICTOREEN, INC.
6000 COCHRAN RD., SOLON, OHIO 44139

TITLE CHECK SOURCE MOUNTING ASSEMBLY

SIZE C | CODE NO 63060 | DWG NO 897A-211-30 | REV B

SCALE 2/1 | DO NOT SCALE | SHEET 1 OF 1

DWG NO 857-210-30 SH 1 REV B

REVISIONS			
REV	DESCRIPTION	DATE	PREPARED
B	REV PER 4CR18-92	8-13-92	BH

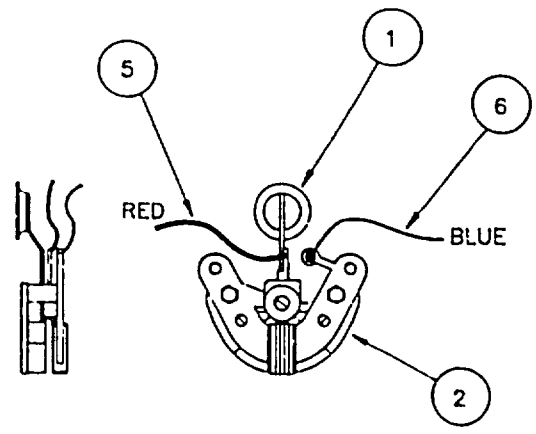

COMPUTER GENERATED DRAWING
ALL CHANGES MUST BE MADE TO COMPUTER DATA BASE AUTOCAD RELEASE 10

DISK NO	FILE NAME
S-259	210-30

UNLESS OTHERWISE SPECIFIED DIMENSIONS ARE IN INCHES TOLERANCES ARE:

DECIMALS	ANGLES	FINISH
.XX=± .015	± 1 DEG	125
.XXX=± .005	±	

REMOVE ALL BURRS & BREAK SHARP EDGES .005 TO .015

NEXT ASSEMBLY USED ON

MATERIAL

FINISH

ORIGINATOR	bh	8-13-92
CHECKED		
PROJ ENG		8-14-92
APPROVED		
QA APPR		

VICTOREEN, INC.
6000 COCHRAN RD., SOLON, OHIO 44139

TITLE ASSEMBLY CHECK SOURCE

SIZE	CAGE NO	DWG NO	REV
B	63060	857-210-30	B

SCALE none | DO NOT SCALE | SHEET 1 OF 1

DWG NO 897A-210-10

THIS DRAWING IS THE PROPERTY OF INOVISION RADIATION MEASUREMENTS, NEITHER THE DRAWING, NOR REPRODUCTIONS OF IT NOR INFORMATION DERIVED FROM IT IS TO BE GIVEN TO OTHERS. NO USE IS TO BE MADE OF IT WHICH IS, OR MAY BE INJURIOUS TO INOVISION RADIATION MEASUREMENTS.

LTR	ECO NO	APPROVED	DATE
3	1629	R. MASSARI	10/6/00

NOTES:

1. FOR +10V SUPPLY, J3 TO BE IN POSITION B–C (ANALOG APPLICATION)
   FOR +15V SUPPLY, J3 TO BE IN POSITION A–B (DIGITAL APPLICATION)
2. BREAK OFF 3 SETS OF 3, FROM 92-9041-A HEADER STRIP FOR J1, & J2, & J3 USE
3. ALTERNATELY, A PRINTED TAG CONTAINING MODEL, SERIAL NO AND REVISION LEVEL MAY BE PLACED IN THE LOCATION SHOWN

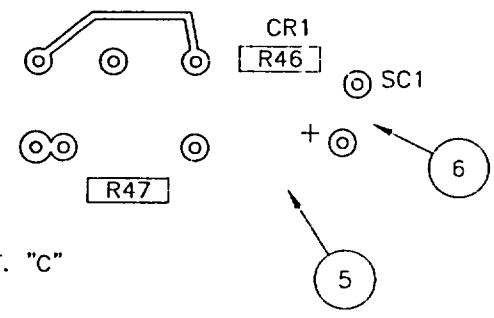

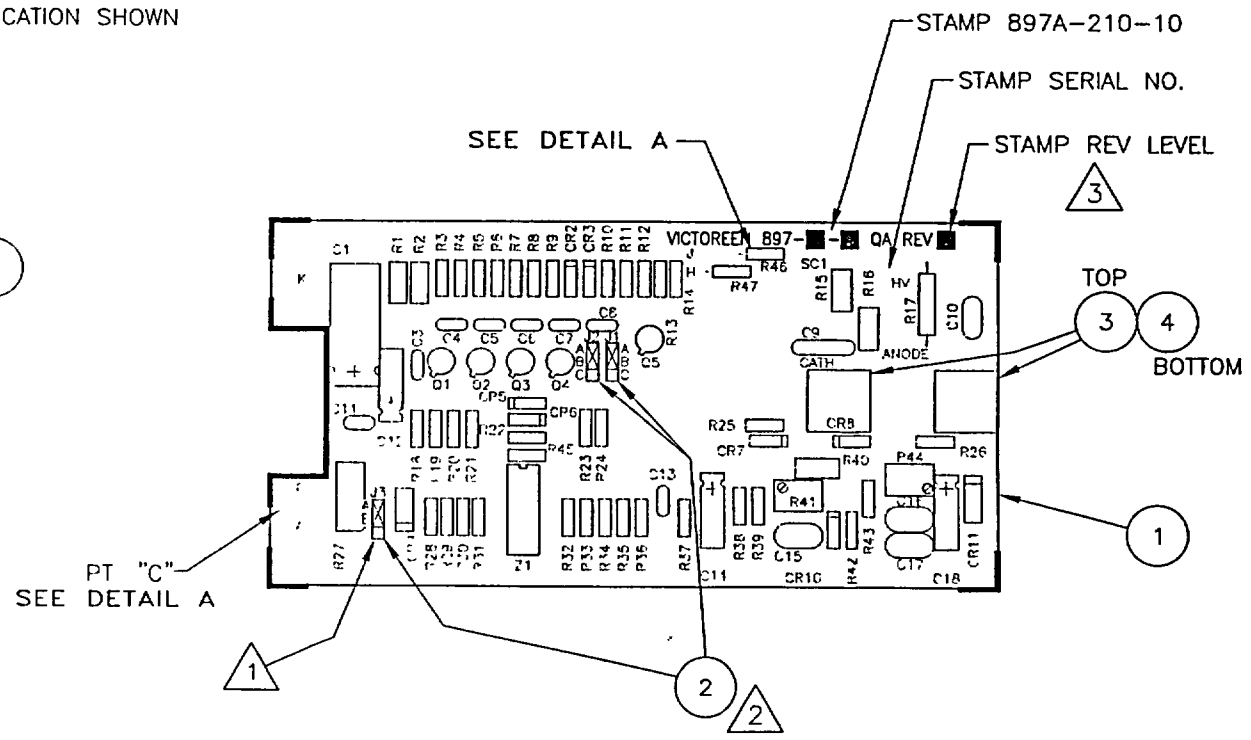

INSTALLATION DETAIL OF RESISTORS R46 & R47
JUMPED TO POINT "C"
COMPONENT SIDE OF CIRCUIT BOARD SHOWN
SOLDER ON COMPONENT SIDE OF BOARD
ITEM 6 IS A SOLID WIRE JUMPER

UNLESS OTHERWISE SPECIFIED DIMENSIONS ARE IN INCHES
TOLERANCES ARE:
DECIMALS XX± 015 .XXX± 005
ANGLES ±1° FINISH 63
FRACTIONS ±1/32
REMOVE ALL BURRS & BREAK SHARP EDGES 005 TO .015

DRAWN BY Original Signed M. Holt	DATE 08/14/00	INOVISION RADIATION MEASUREMENTS 6045 COCHRAN ROAD SOLON OHIO 44139
ENGINEER Original Signed BW	10/5/00	TITLE ASSEMBLY DETECTOR PC BOARD
APPROVED Original Signed J. HALE	10/5/00	SIZE B · CAGE NO 1JZH3 · DWG NO 897A-210-10 · REV 3
		SCALE 1/1 · DO NOT SCALE · SHEET 1 OF 1

DWG NO 857-210-20

THIS DRAWING IS THE PROPERTY OF INOVISION RADIATION MEASUREMENTS NEITHER THE DRAWING, NOR REPRODUCTIONS OF IT, NOR INFORMATION DERIVED FROM IT IS TO BE GIVEN TO OTHERS. NO USE IS TO BE MADE OF IT WHICH IS, OR MAY BE INJURIOUS TO INOVISION RADIATION MEASUREMENTS.

LTR	ECO NO	APPROVED	DATE
6	1629	[illegible]	10/6/00

NOTES:

1. FORM CATHODE STRAP AS SHOWN AND SOLDER ITEM 5, PLACE AROUND G.M. TUBE AND TIGHTEN HAND TIGHT ONLY WRAP TIN SHIELD AROUND TUBE AS SHOWN. WRAP FIRMLY, BUT WITH CARE, SO AS NOT TO DEFORM THE TUBE IN ANY WAY ALIGN THE THE APERTURE WITH THE TUBE CATHODE LEAD AS SHOWN.
2. WRAP LEAD AROUND TIN. BE SURE APERTURE LINES UP WITH TIN SHIELD.
3. TO BE USED WITH ALUMINUM OUTER HOUSING, (897A-2X0 ONLY)
4. FILL CAVITY AT END OF TUBE W/ITEM 9 (RTV) AND PLACE ITEM 6 (TIN CAP) OVER TUBE END
5. PLACE A SMALL DAB OF ITEM 9 (RTV) IN CENTER OF ITEM 6 (TIN CAP) AND PRESS ITEM 7 ONTO ITEM 6
6. SHRINK ITEM 8 ONTO ANODE CONTACT AFTER SOLDERING ITEM 3 (RED WIRE) CAREFULLY PRESS CONTACT ONTO TUBE PIN
7. ANODE CONTACT AND CATHODE STRAP ARE SUPPLIED AS PART OF ITEM 1 (G.M. TUBE).

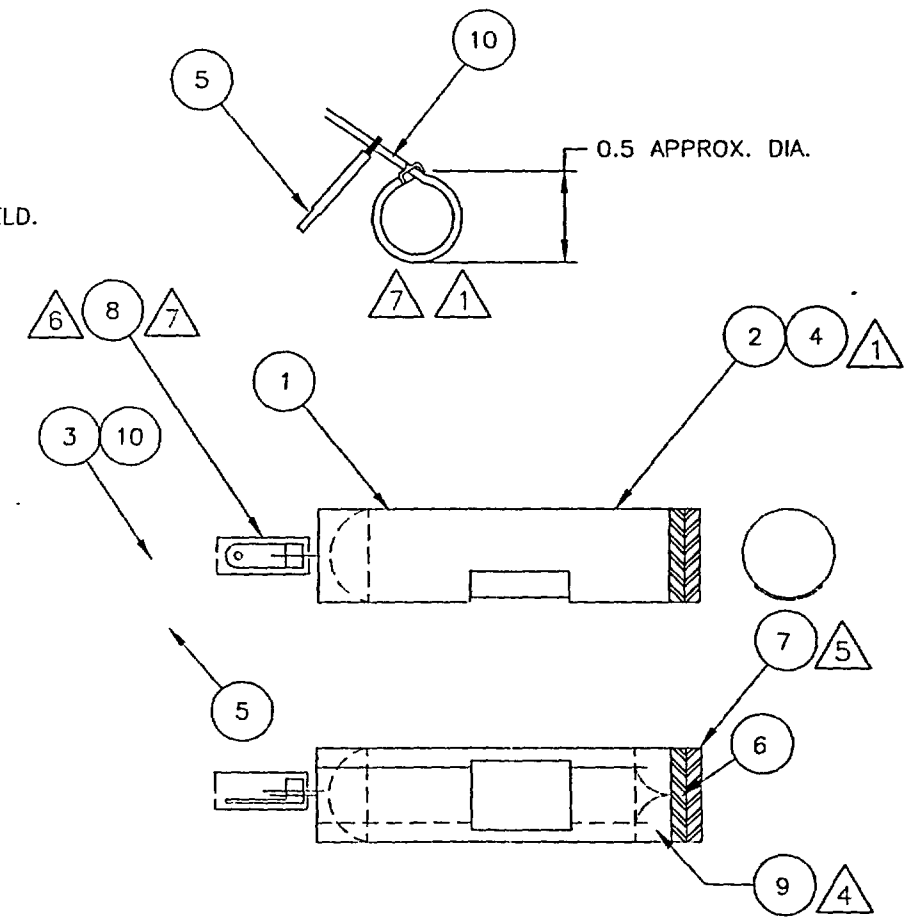

UNLESS OTHERWISE SPECIFIED DIMENSIONS ARE IN INCHES TOLERANCES ARE
DECIMALS XX± 015 XXX± 005
ANGLES ±1° FINISH 63
FRACTIONS ±1/32
REMOVE ALL BURRS & BREAK SHARP EDGES 005 TO 015

DRAWN BY Original Signed M. Hall	DATE 08/14/00	INOVISION RADIATION MEASUREMENTS 6045 COCHRAN ROAD SOLON, OHIO 44139
ENGINEER Original Signed DW	10/5/00	TITLE TUBE & SHIELD ASSEMBLY LOW RANGE
APPROVED Original Signed J. Hall	10/5/00	SIZE B · CAGE NO 1JZH3 · DWG NO 857-210-20 · REV 6
		SCALE N/A · DO NOT SCALE · SHEET 1 OF 1

THIS DRAWING IS THE PROPERTY OF VICTOREEN INCORPORATED, NEITHER THE DRAWING, NOR REPRODUCTIONS OF IT, NOR INFORMATION DERIVED FROM IT IS TO BE GIVEN TO OTHERS. NO USE IS TO BE MADE OF IT WHICH IS, OR MAY BE INJURIOUS TO VICTOREEN INCORPORATED.

DWG NO 857-220-20 SH 1 REV E

REVISIONS

REV	DESCRIPTION	DATE	APPROVED
E	REV PER 4CR18-92	8-03-92	—

NOTES:

1. WHEN INSTALLING THE LEAD SHIELD, THE GM TUBE CATHODE LEAD AND APERTURE SHOULD BE IN LINE.
2. SHAPE LEAD SHIELD BEFORE INSTALLING, TO PREVENT GM TUBE DAMAGE. CLOSE ONE END OF LEAD SHIELD AS SHOWN.
3. BIASING SOURCE TO BE ADJUSTED FOR 10-15 C.P.M. AT 575 VOLTS D.C. IF REQUIRED. TAPE IN PLACE WITH ITEM 11.
4. TO BE USED WITH ALUMINUM OUTER HOUSING.

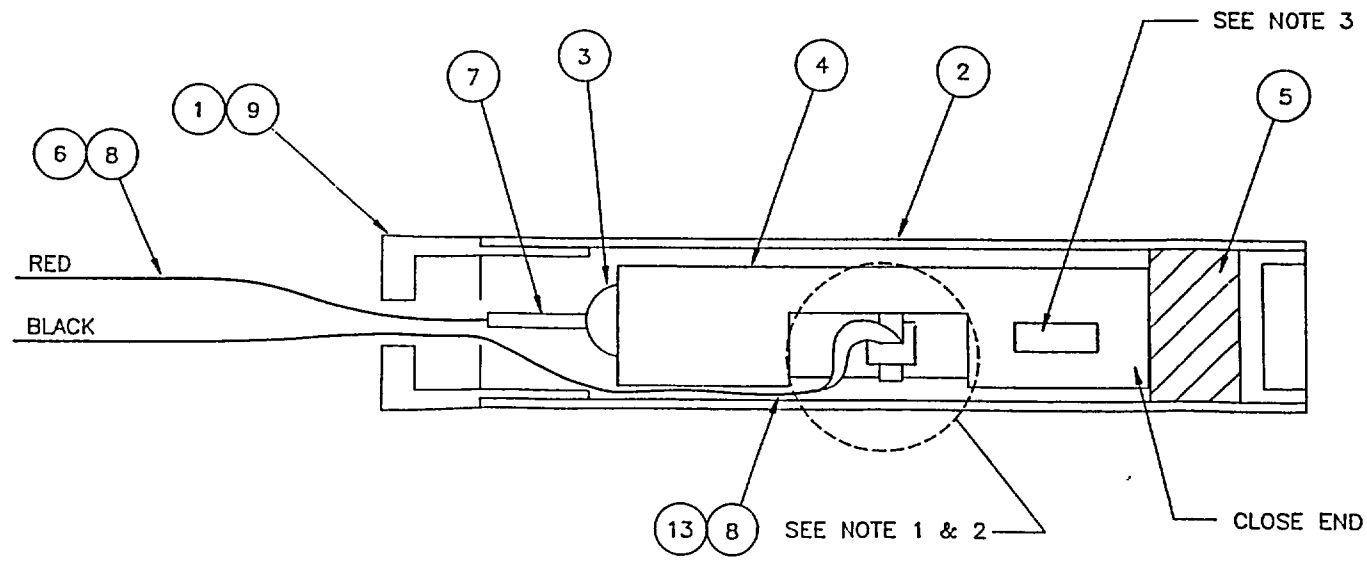

COMPUTER GENERATED DRAWING
ALL CHANGES MUST BE MADE TO COMPUTER DATA BASE AUTOCAD RELEASE 10

DISK NO	FILE NAME
S-258	220-20

UNLESS OTHERWISE SPECIFIED DIMENSIONS ARE IN INCHES TOLERANCES ARE:

DECIMALS	ANGLES	FINISH
.XX=± .06	± 1 DEG	125
.XXX=± .015	±	

REMOVE ALL BURRS & BREAK SHARP EDGES .005 TO .015

NEXT ASSEMBLY USED ON

MATERIAL

FINISH

PREPARED	bh	8-03-92
CHECKED	N/A	
PROJ ENG	AK	8-12-92
APPROVED	N/A	
QA APPR	[illegible]	8/17/92

VICTOREEN, INC.
6000 COCHRAN RD., SOLON, OHIO 44139

TITLE TUBE ASSEMBLY MEDIUM RANGE

SIZE	CAGE NO	DWG NO	REV.
B	63060	857-220-20	E

SCALE 4X DO NOT SCALE SHEET 1 OF 1

THIS DRAWING IS THE PROPERTY OF INOVISION RADIATION MEASUREMENTS, NEITHER THE DRAWING NOR REPRODUCTIONS OF IT NOR INFORMATION DERIVED FROM IT IS TO BE GIVEN TO OTHERS NOR USE TO BE MADE OF IT WHICH IS OR MAY BE INJURIOUS TO INOVISION RADIATION MEASUREMENT

PART NO 857-230-20 SH 1 REV 7

REVISIONS			
REV	DESCRIPTION	DATE	APPROVED
7	REVISED PER 2CR7-99	3/3/99	JPJ

NOTES

1. WHEN INSTALLING THE LEAD SHIELD THE GM TUBE CATHODE LEAD AND APERTURE SHOULD BE IN LINE AS SHOWN IN DETAIL
2. ROLL LEAD SHIELD ON ROUND 1/4 FORM AND FILE EDGE TO FIT I.D. OF TUBE CAPSULE
3. INSTALL THE ANODE CONTACT (SUPPLIED WITH G.M. TUBE) AFTER ITEMS 6, 7 & 8 ARE ATTACHED
4. BIASING SOURCE TO BE ADJUSTED FOR 10-15 C.P.M. AT 550VDC FOR ANALOG APPLICATIONS. TAPE IN PLACE WITH ITEM 12
5. FOAM (ITEM 4) TO BE INSTALLED INTO FORMED LEAD (ITEM 5) TO PROTECT GLASS END OF GM TUBE (ITEM 1)

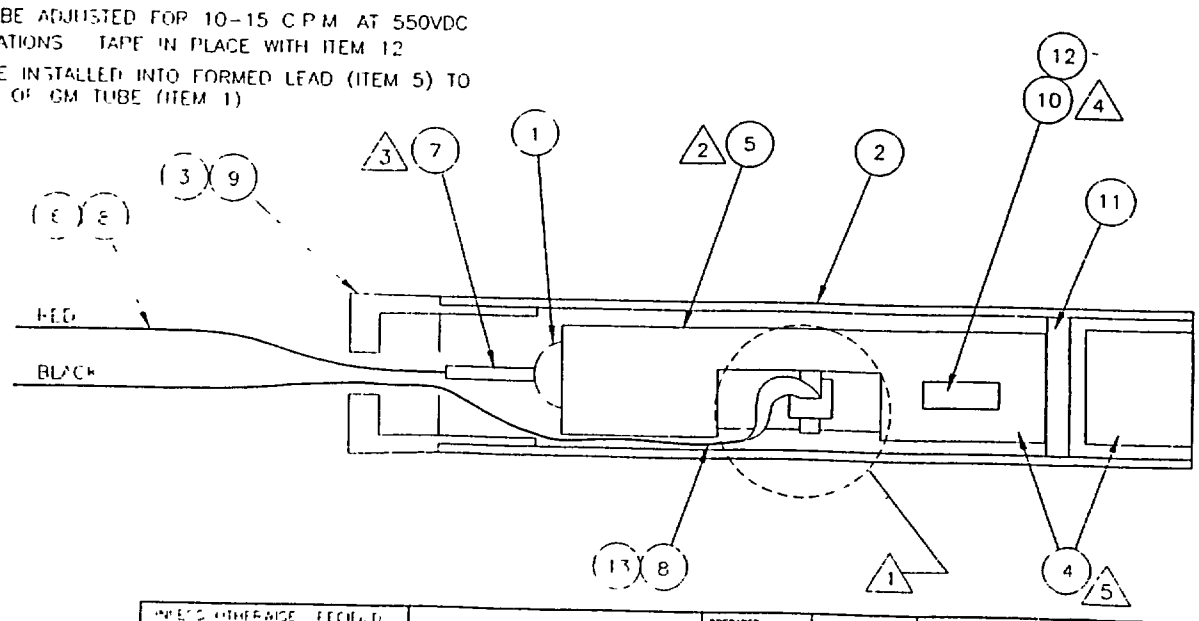

UNLESS OTHERWISE SPECIFIED DIMENSIONS ARE IN INCHES TOLERANCES ARE
DECIMALS ANGLE FRACTION
REMOVE ALL BURRS & BREAK SHARP EDGES .005 TO .015

NEXT ASSEMBLY USED ON
MATERIAL
FINISH

PREPARED	bh	8-03-92
CHECKED	ARA	3-22-99
PROJ ENG	JTB	3-26-99
APPROVED	N/A	
QA/APPR		3-23-99

INOVISION RADIATION MEASUREMENTS
6045 COCHRAN RD., SOLON, OHIO 44139

TITLE TUBE ASSEMBLY HIGH RANGE

SIZE	CAGE NO	DWG. NO	REV
B	63060	857-230-20	7

SCALE 4X DO NOT SCALE SHEET 1 OF 1

897A-210-13 1 B

REV	DESCRIPTION	DATE	APPROVED
B	REV PER ECR28-95	11-13-95	

NOTES

1. ALL RESISTORS ARE 1/4 W 5% UNLESS OTHERWISE SPECIFIED
2. Z1 IS A LM139 (DIP)
3. PLACE J1 & J2 IN A TO B POSITION FOR +2 OUTPUT, USED IN ALL AREA MONITOR APPLICATIONS
4. J3 IS INSTALLED IN THE A-B POSITION FOR ALL DIGITAL AREA MONITOR APPLICATIONS USING +15VDC SUPPLY THE B-C POSITION IS SELECTED FOR ANALOG USE WITH 856 SERIES READOUT MODULES.
5. ALL DIODES 1N914B UNLESS OTHERWISE SPECIFIED
6. DETECTOR INTERNAL DISCRIMINATOR NORMAL ADJUSTMENT IS 0.50 VOLTS MEASURED FROM Z1 PIN 9(+) TO Z1 PIN 8(-)
7. ANTI-JAM THRESHOLD SETTING DEPENDANT ON TUBE TYPE AND IS DETERMINED AT THE TIME OF CALIBRATION

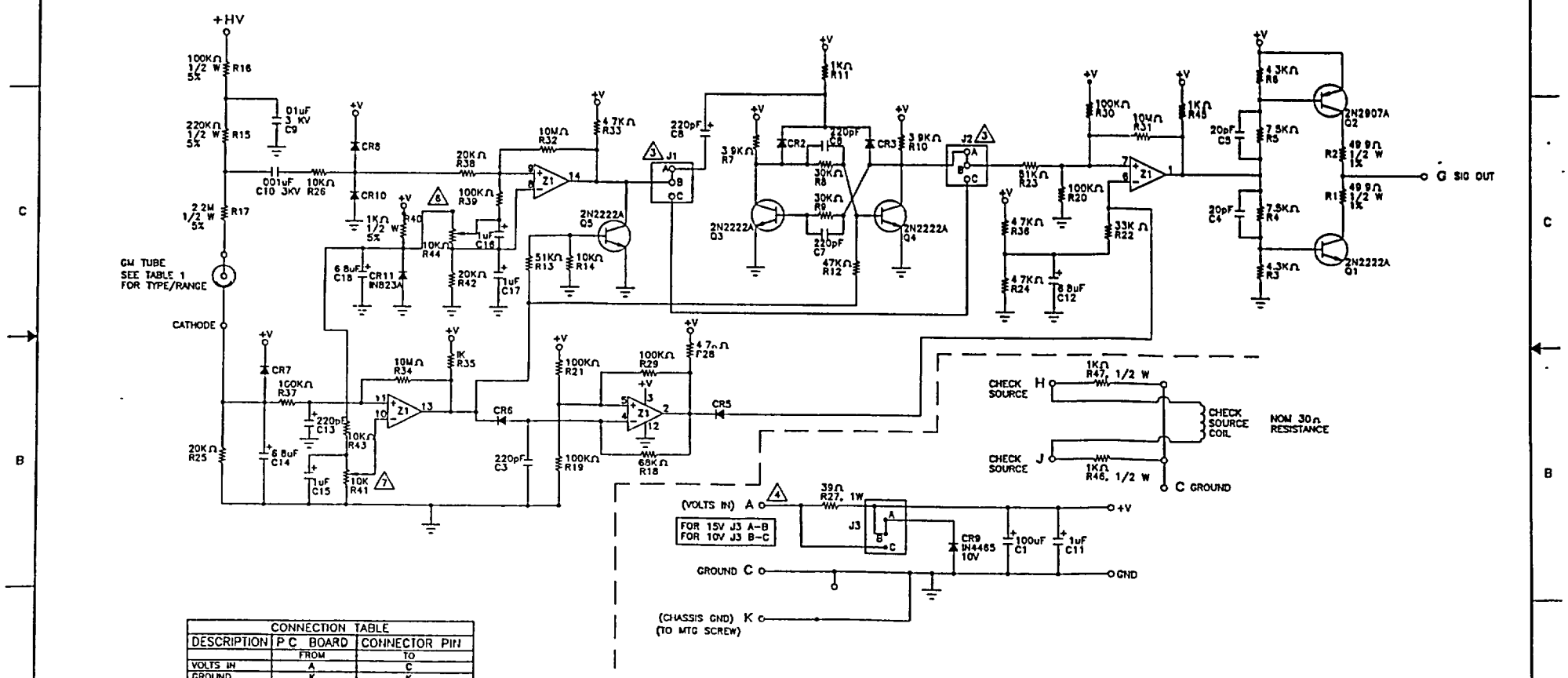

CONNECTION TABLE

DESCRIPTION	P C BOARD FROM	CONNECTOR PIN TO
VOLTS IN	A	C
GROUND	K	K
SIGNAL OUT	G	G
CHECK SOURCE	H	H
CHECK SOURCE	J	J
CHASSIS GND	K	MTG SCREW
+HV	HV	E

TABLE 1

DETECTOR MODEL	RANGE IN mR/h	TUBE TYPE
897A-21X	0.01 - 1.0E3	ZP-1320
897A-22X	0.1 - 1.0E4	ZP-1310
897A-23X	1 - 1.0E5	ZP-1300

UNLESS OTHERWISE SPECIFIED DIMENSIONS ARE IN INCHES TOLERANCES ARE:
DECIMALS .XX-±.03 .XXX-±.01 ANGLES ±1° FINISH ✓
REMOVE ALL BURRS & BREAK SHARP EDGES .005 TO .015

COMPUTER GENERATED DRAWING
STD-344 210-13
MATERIAL
FINISH

NEXT ASSEMBLY USED ON
WT 2-16-95
DEA 1-15-96
(illegible) 1/19/96
N/A
(illegible) 1/19/96

VICTOREEN, INC.
6000 COCHRAN RD., SOLON, OHIO 44139

TITLE
SCHEMATIC
GM DETECTOR

D 63060 897A-210-13 B
SCALE N/A DO NOT SCALE SHEET 1 OF 1

GEL897A-2X1 | 1 | B

B	REV PER 9CR28-95	11-14-95	

NOTES

1. RECOMMENDED DETECTOR MOUNTING FOR AREA MONITORING APPLICATIONS,
   - USE MOUNTING BRACKET SUPPLIED
   LOCATE DETECTOR ABOVE NORMAL HEAD HEIGHT
   ORIENT DETECTOR VERTICALLY, WITH CONNECTOR FACING UPWARDS
2. APPPOXIMATE WEIGHT AS SHOWN· 4 7 LBS
3. RECOMMENDED MOUNTING HARDWARE. QTY 2, 1/4-20 GRADE 5 (MIN) BOLTS
4. RADIOACTIVE OPERATIONAL CHECK SOURCE. 8uCI Cl-36
5. G.M TUBE CENTER LINE INSIDE HOUSING.
6. HOUSING MATERIAL. 316 STAINLESS STEEL
7. MATING CONNECTOR. VICTOREEN P/N 92-7005-15A, CLAMP P/N 24-37-1, AND BUSHING P/N 24-37-2

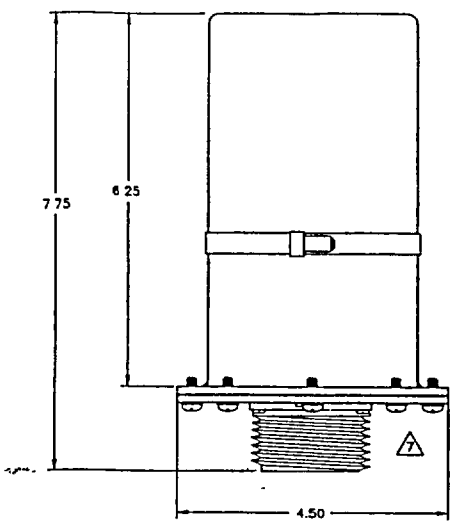

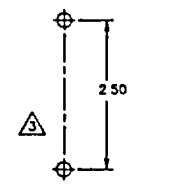

MOUNTING TEMPLATE FOR 857-211-18 WALL MOUNTING BRACKET

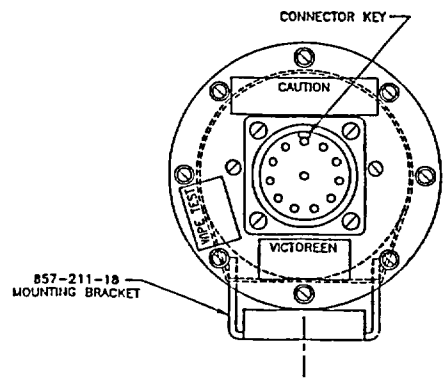

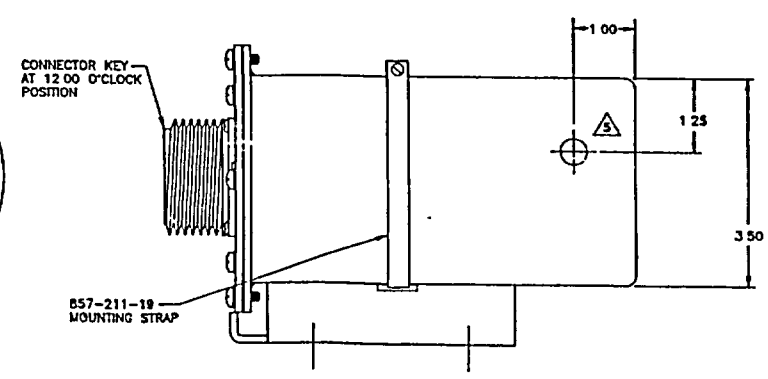

UNLESS OTHERWISE SPECIFIED DIMENSIONS ARE IN INCHES TOLERANCES ARE:
DECIMALS ANGLES FINISH
.XX=± .015 ±1 DEG 125
.XXX=± .005 ±
REMOVE ALL BURRS & BREAK SHARP EDGES .005 TO .015

COMPUTER GENERATED DRAWING
STD-344 | 897A-2X1
MATERIAL
FINISH

NEXT ASSEMBLY USED ON	
WT	2-15-95
AEA	1-15-96
DW	11/29/95
	1/19/96

VICTOREEN, INC.
6000 COCHRAN RD., SOLON, OHIO 44139

TITLE: DIMENSIONAL OUTLINE GM DETECTOR WITH STAINLESS STEEL HOUSING

D 63060 | GEL897A-2X1 | B

SCALE n/a | DO NOT SCALE | SHEET 1 OF 1

857-211-18

D S	ITEM	PART NO	QUAN.	DESCRIPTION

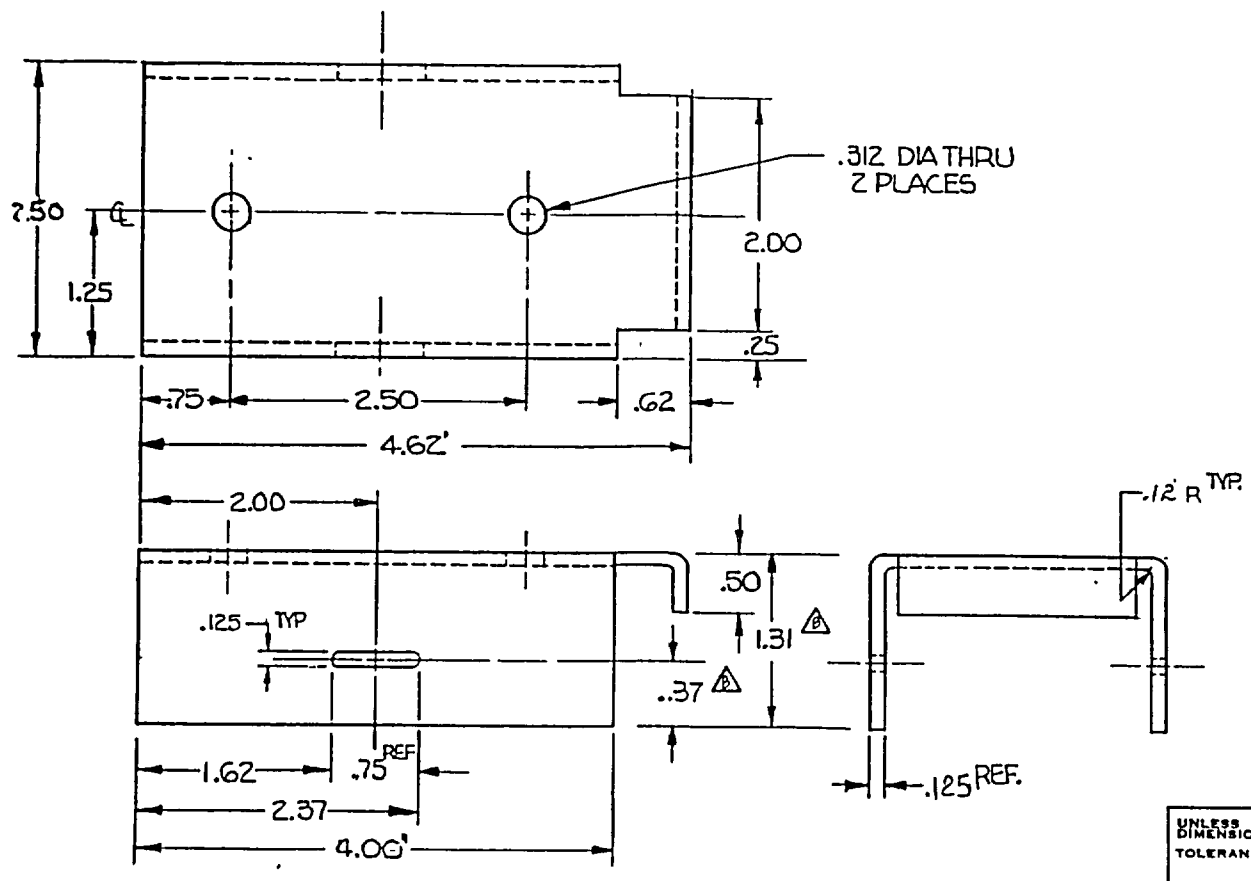

NOTES: UNLESS OTHERWISE SPECIFIED

857-211-18

UNLESS OTHERWISE SPECIFIED DIMENSIONS ARE IN INCHES
TOLERANCES: ± .03

ANGLES
ALL OTHER TOLERANCES PER VICTOREEN DWG NO. 801778

857-111-5	857-111
857-121-5	857-121
857-131-5	857-131
857-211-5	857-211
857-221-5	857-221
857-231-5	857-231
NEXT ASS'Y	USED ON

APPLICATION:

REVISIONS

REV LET	DESCRIPTION	DATE
A	RELEASED FOR PRODUCTION ENO 14290	5/9/80 M
B	REVISED PER ECO #15018	5/11/82 M
C	REVISED PER ECO 8CR2	8/9/84 M
D	REVISED PER ECO 10CR3R	11/30/84

QA REVIEW REV. D
Chuck Lee 11/12/84
QA REVIEW REV. C
Roger Simon 8-27-81
NUCLEAR
Q.A. REVIEWED REV. B
Peter J. Conyc 5-12-82

VICTOREEN, INC.
10101 WOODLAND AVE., CLEVELAND, OHIO 44104

NAME: DETECTOR MOUNTING BRKT

MATERIAL: .125 THK 304 STAINLESS STEEL

FINISH:

DRAWN	DATE	CHECKED	DATE	APP'D	DATE
T.J. CARNEY	4/1/80	BC	4/15/80	Chuck	11/12/84

SIZE	CODE IDENT. NO.	DWG. NO.
B	63060	857-211-18

SCALE: | SHEET: 1 OF 1

857-211 -20

ITEM	PART NO	QUAN	DESCRIPTION
1	35-183	1	~~GENERATOR TUBE~~
2	857-1-16		~~LEAD SHIELD~~
3	MS B 0093	2	~~LEADS & BALANCE WIRE~~

REV LET	DESCRIPTION	DATE
	RELEASED FOR PRODUCTION	
A	ECO 14626	6/17/81
B	REV. PER ECO NO. 2CR10	3/26/85
C	ECO 1CR28-87	1/26/87 M
D	REV PER ECO # 5CR22-90	5/17/90

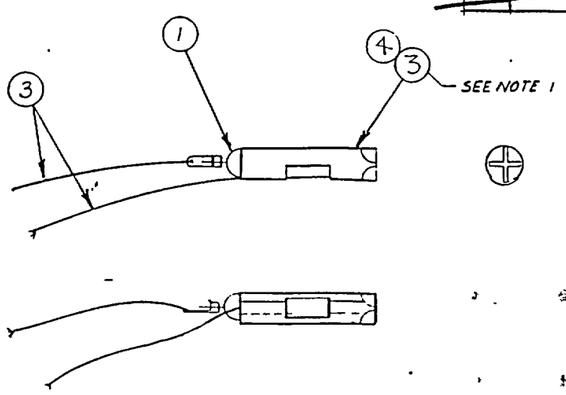

PARTS LIST LAST GENERAL REVIEW
BY mmP DATE 1-26-87

QA REVIEW REV B
Terry Anderson 6/17/85

NUCLEAR
Q.A. REVIEWED REV. A
7-2-81

REV LETTER	DRWN DATE	CHK DATE	ENG DATE	APPRVD DATE	QA DATE
D	SDS 5/10/90	S.A. 5-17-90	EAP 5-17-90	MJT 5/11/90	5/17/90
C	AYGUS 1-15-87	MMP 1-26-87	BL 1/23/87	JRO 1/27/87	1/28/87

3. TO BE USED WITH S S. OUTER HOUSING.

2) TRIM TO FIT SHIELD SHOULD NOT OVERLAP

1. —— WRAP SHIELD AROUND TUBE AS SHOWN. WRAP FIRMLY BUT WITH CARE SO AS NOT TO DEFORM THE TUBE IN ANY WAY. ALIGN THE APERTURE WITH THE TUBE CATHODE LEAD AS SHOWN. CLOSE ONE END OF LEAD SHIELD AS SHOWN. TRIM TO FIT. NO OVERLAP

NOTES: UNLESS OTHERWISE SPECIFIED

857-211 -20

UNLESS OTHERWISE SPECIFIED DIMENSIONS ARE IN INCHES
TOLERANCES:
FRACTIONAL DIMENSIONS ± .015
DECIMAL DIMENSIONS:
.XX = ±.015 .XXX = ±.005
ANGLES ±
ALL OTHER TOLERANCES PER VICTOREEN DWG NO. 501775

897-211-5	897-211
857-211-5	857-211
857-211-5	857-211
NEXT ASSY	USED ON
APPLICATION	

VICTOREEN INSTRUMENT DIVISION
10101 WOODLAND AVE., CLEVELAND, OHIO 44104

NAME LOW RANGE TUBE & SHIELD ASS'Y

MATERIAL	FINISH
~	~

DRAWN	DATE	CHECKED	DATE	APPD	DATE
TJ CARNEY	5/22/81			P.P.	6/17/81

SIZE	CODE IDENT	DWG NO
B	63060	857-211 -20

SCALE ~ SHEET — OF —

THIS DRAWING IS THE PROPERTY OF VICTOREEN INCORPORATED, NEITHER THE DRAWING, NOR REPRODUCTIONS OF IT, NOR INFORMATION DERIVED FROM IT IS TO BE GIVEN TO OTHERS. NO USE IS TO BE MADE OF IT WHICH IS, OR MAY BE INJURIOUS TO VICTOREEN INCORPORATED

DWG NO 857-221-20 SH 1 REV E

REVISIONS			
REV	DESCRIPTION	DATE	APPROVED
E	REV PER 4CR18-92	8-03-92	

NOTES.

1. WHEN INSTALLING THE LEAD SHIELD, THE GM TUBE CATHODE LEAD AND APERTURE SHOULD BE IN LINE.
2. SHAPE LEAD SHIELD BEFORE INSTALLING, TO PREVENT GM TUBE DAMAGE. CLOSE ONE END OF LEAD SHIELD AS SHOWN.
3. BIASING SOURCE TO BE ADJUSTED FOR 10-15 C.P.M. AT 575 VOLTS D.C. IF REQUIRED TAPE IN PLACE WITH ITEM 11.
4. TO BE USED WITH S.S. OUTER HOUSING.

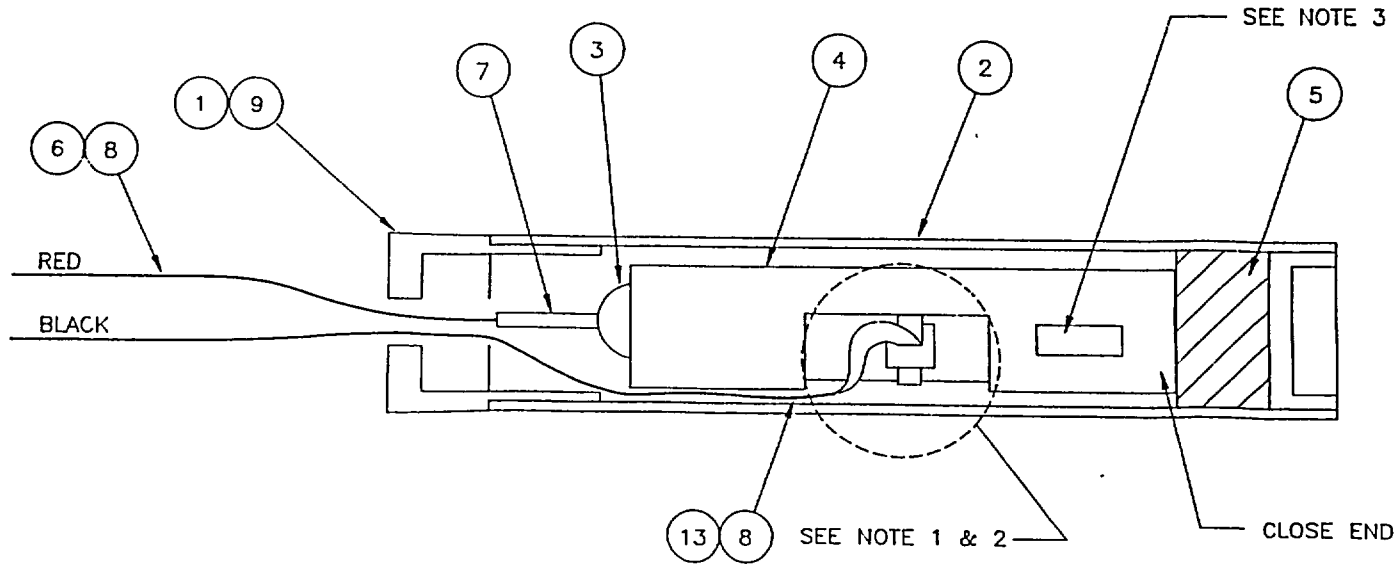

COMPUTER GENERATED DRAWING
ALL CHANGES MUST BE MADE TO COMPUTER DATA BASE AUTOCAD RELEASE 10

DISK NO	FILE NAME
S-250	221-20

UNLESS OTHERWISE SPECIFIED DIMENSIONS ARE IN INCHES TOLERANCES ARE:

DECIMALS	ANGLES	FINISH
.XX=± .06	± 1 DEG	125
.XXX=± .015	±	

REMOVE ALL BURRS & BREAK SHARP EDGES .005 TO .015

NEXT ASSEMBLY USED ON

MATERIAL

FINISH

PREPARED	bh	8-03-92
CHECKED		N/A
PROJ ENG	AHL	8-12-92
APPROVED		N/A
QA APPR		8/17/92

VICTOREEN, INC.
6000 COCHRAN RD., SOLON, OHIO 44139

TITLE TUBE ASSEMBLY MEDIUM RANGE

SIZE	CAGE NO	DWG NO	REV
B	63060	857-221-20	E

SCALE 4X DO NOT SCALE SHEET 1 OF 1

THIS DRAWING IS THE PROPERTY OF VICTOREEN INCORPORATED. NEITHER THE DRAWING, NOR REPRODUCTIONS OF IT, NOR INFORMATION DERIVED FROM IT IS TO BE GIVEN TO OTHERS. NO USE IS TO BE MADE OF IT WHICH IS, OR MAY BE INJURIOUS TO VICTOREEN INCORPORATED.

DWG NO 857-231-20 SH 1 REV E

REVISIONS			
REV	DESCRIPTION	DATE	APPROVED
E	REV PER 4CR18-92	8-03-92	

NOTES:

1. WHEN INSTALLING THE LEAD SHIELD, THE GM TUBE CATHODE LEAD AND APERTURE SHOULD BE IN LINE.
2. ROLL LEAD SHIELD ON ROUND 1/4" FORM AND FILE EDGE TO FIT I.D. OF TUBE CAPSULE.
3. INSTALL THE SPECIAL CATHODE LEAD ON THE GM TUBE.
4. BIASING SOURCE TO BE ADJUSTED FOR 10-15 C.P.M. AT 575 VOLTS D.C. IF REQUIRED. TAPE IN PLACE WITH ITEM 12.
5. TO BE USED WITH S.S. OUTER HOUSING.

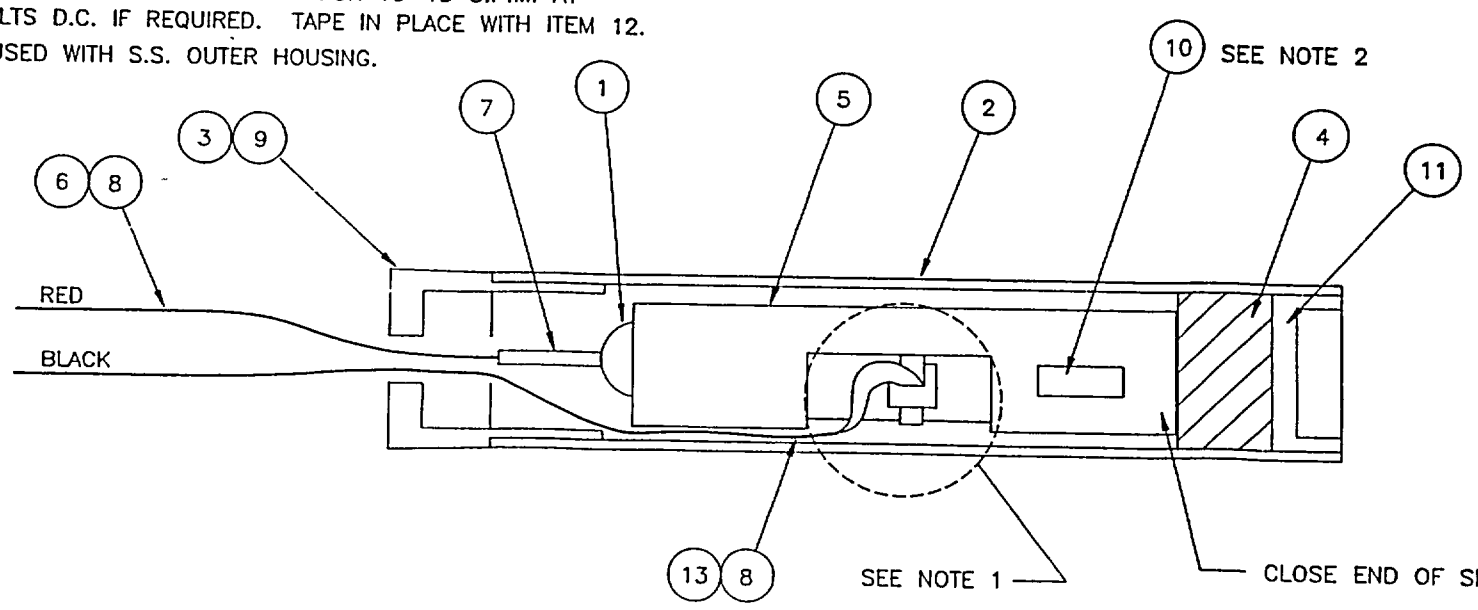

COMPUTER GENERATED DRAWING
ALL CHANGES MUST BE MADE TO COMPUTER DATA BASE AUTOCAD RELEASE 10

DISK NO	FILE NAME
S-258	231-20

UNLESS OTHERWISE SPECIFIED DIMENSIONS ARE IN INCHES TOLERANCES ARE:

DECIMALS	ANGLES	FINISH
.XX=± 06	± 1 DEG	125
.XXX=± .015	±	

REMOVE ALL BURRS & BREAK SHARP EDGES 005 TO .015

NEXT ASSEMBLY USED ON

MATERIAL

FINISH

PREPARED	bh	8-03-92
CHECKED		
PROJ ENG		8-12-92
APPROVED		N/A
QA APPR		8/17/92

VICTOREEN, INC.
6000 COCHRAN RD., SOLON, OHIO 44139

TITLE TUBE ASSEMBLY HIGH RANGE

SIZE	CAGE NO	DWG NO	REV
B	63060	857-231-20	E

SCALE 4X DO NOT SCALE SHEET 1 OF 1

956A-201-106 | 1 | B

B	REV PER 10CR40-95	12-04-95	bh

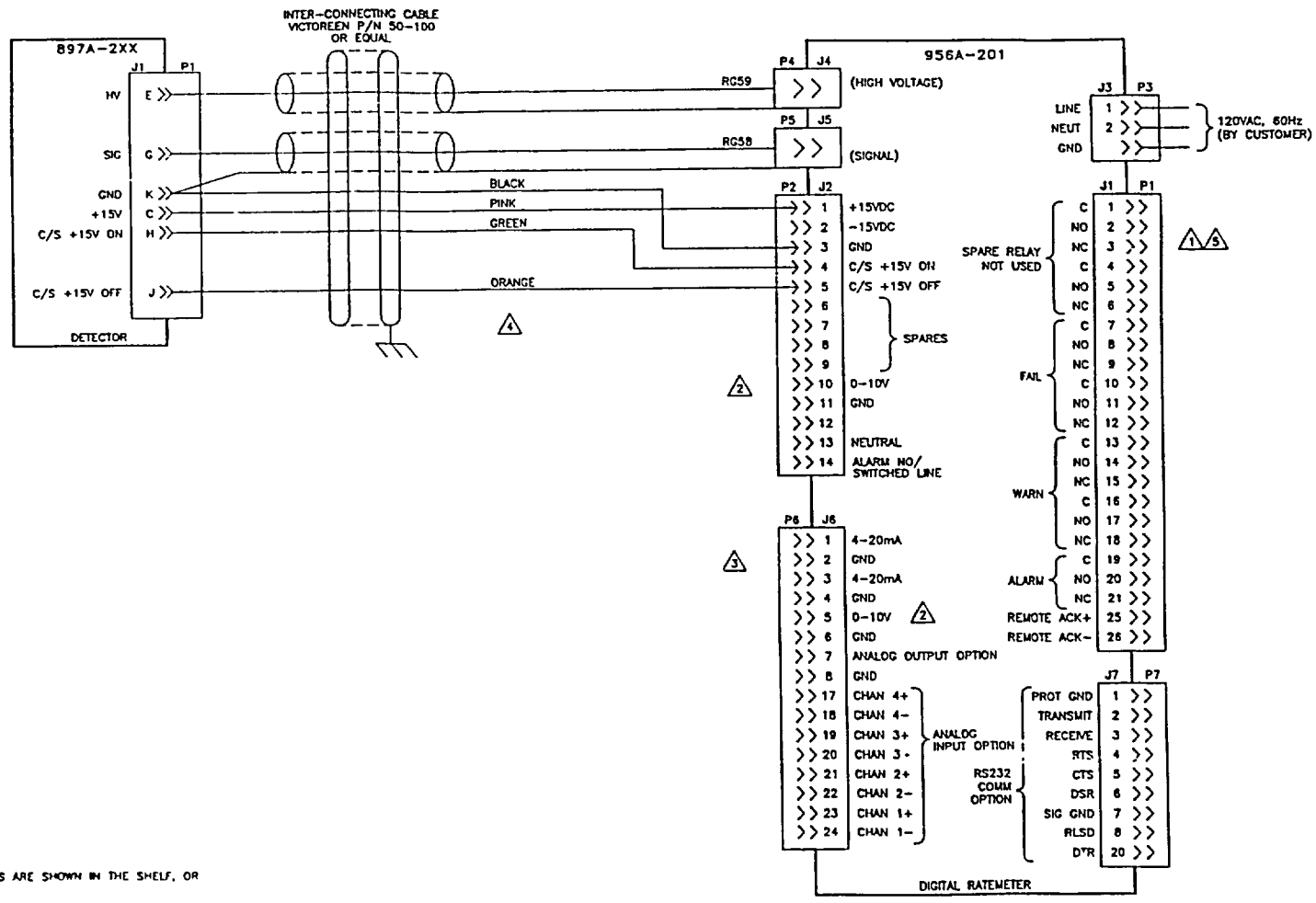

NOTES

1. ALARM FAIL AND WARN RELAYS ARE SHOWN IN THE SHELF, OR DE-ENERGIZED STATE.
2. 0-10V SELECTED FOR USE WITH REMOTE METER ON P2 OR CUSTOMER USE ON P6, 5-8 (NOT BOTH)
3. MAXIMUM LOOP RESISTANCE 500 OHMS OR LESS ON 4-20mA OUTPUTS FACTORY CALIBRATION USES 250 OHMS +/- 1% LOAD
4. WIRE COLORS APPLY TO 50-100 CABLE ONLY
5. CUSTOMER CONTACTS RATED AT 5A 120VAC (RESISTIVE)

UNLESS OTHERWISE SPECIFIED DIMENSIONS ARE IN INCHES TOLERANCES ARE:
DECIMALS .XX=±.015 .XXX=±.005 ANGLES ±1° FINISH 125
REMOVE ALL BURRS & BREAK SHARP EDGES .005 TO .015

COMPUTER GENERATED DRAWING
S-345 | 201-106
MATERIAL
FINISH

NEXT ASSEMBLY USED ON
bh 3-14-95

VICTOREEN, INC.
6000 COCHRAN RD., SOLON, OHIO 44139

TITLE
LOOP DIAGRAM
GM AREA MONITOR

SIZE	CODE NO.	DWG NO.	REV
D	63060	956A-201-106	B

SCALE N/A | DO NOT SCALE | SHEET 1 OF 1

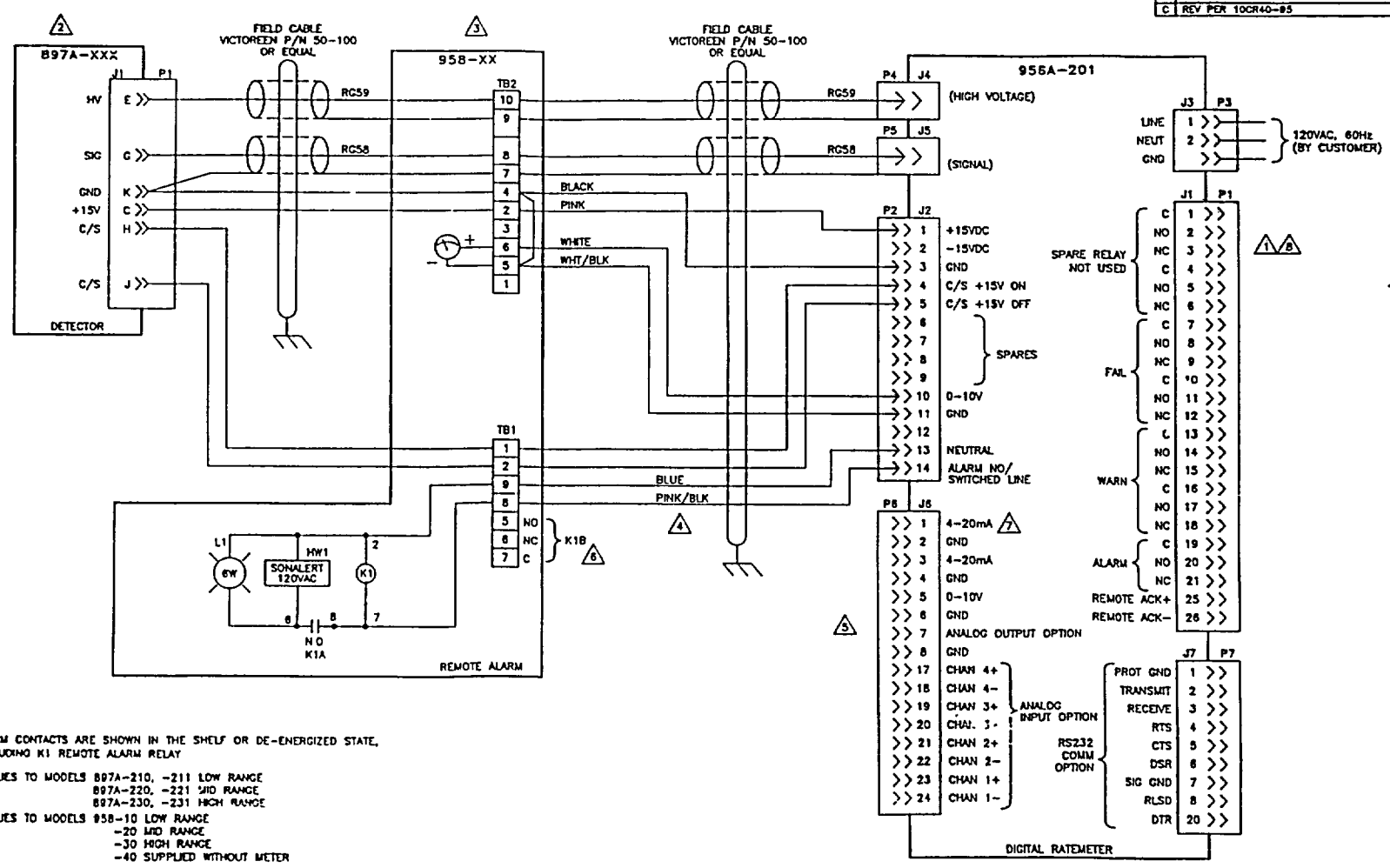

NOTES

1. ALARM CONTACTS ARE SHOWN IN THE SHELF OR DE-ENERGIZED STATE, INCLUDING K1 REMOTE ALARM RELAY
2. APPLIES TO MODELS 897A-210, -211 LOW RANGE
   897A-220, -221 MID RANGE
   897A-230, -231 HIGH RANGE
3. APPLIES TO MODELS 958-10 LOW RANGE
   -20 MID RANGE
   -30 HIGH RANGE
   -40 SUPPLIED WITHOUT METER
4. WIRE COLORS APPLY TO 50-100 CABLE ONLY
5. 0-10 VOLT ANALOG OUTPUT NOT AVAILABLE WHEN 958 REMOTE ALARM WITH METER IS INSTALLED.
6. CONTACT RATING FOR THIS SET IS 5A (RESISTIVE) 120VAC. REMOTE RELAY K1 IS ENERGIZED WHEN CHANNEL IS IN ALARM CONDITION
7. MAXIMUM LOOP RESISTANCE 500 OHMS OR LESS ON 4-20mA OUTPUTS FACTORY CALIBRATION USES 250 OHMS +/- 1% LOAD.
8. CUSTOMER CONTACTS RATED AT 5A 120VAC (RESISTIVE)

C	REV PER 10CR40-95	12-04-95	bh

958-1-24 1 C

UNLESS OTHERWISE SPECIFIED DIMENSIONS ARE IN INCHES TOLERANCES ARE:
DECIMALS .XX=±.015 .XXX=±.005 ANGLES ±1° FINISH 125
REMOVE ALL BURRS & BREAK SHARP EDGES .005 TO .010

COMPUTER GENERATED DRAWING
S-369 1-24
MATERIAL
FINISH

NEXT ASSEMBLY USED ON
bh 12-04-95
ARA 1-23-96
DW 1/8/96
N/A
1/8/96

VICTOREEN, INC.
6000 COCHRAN RD., SOLON, OHIO 44139

TITLE
EXTERNAL CONNECTION DIAGRAM

D 63060 958-1-24 C
SCALE N/A DO NOT SCALE SHEET 1 OF 1

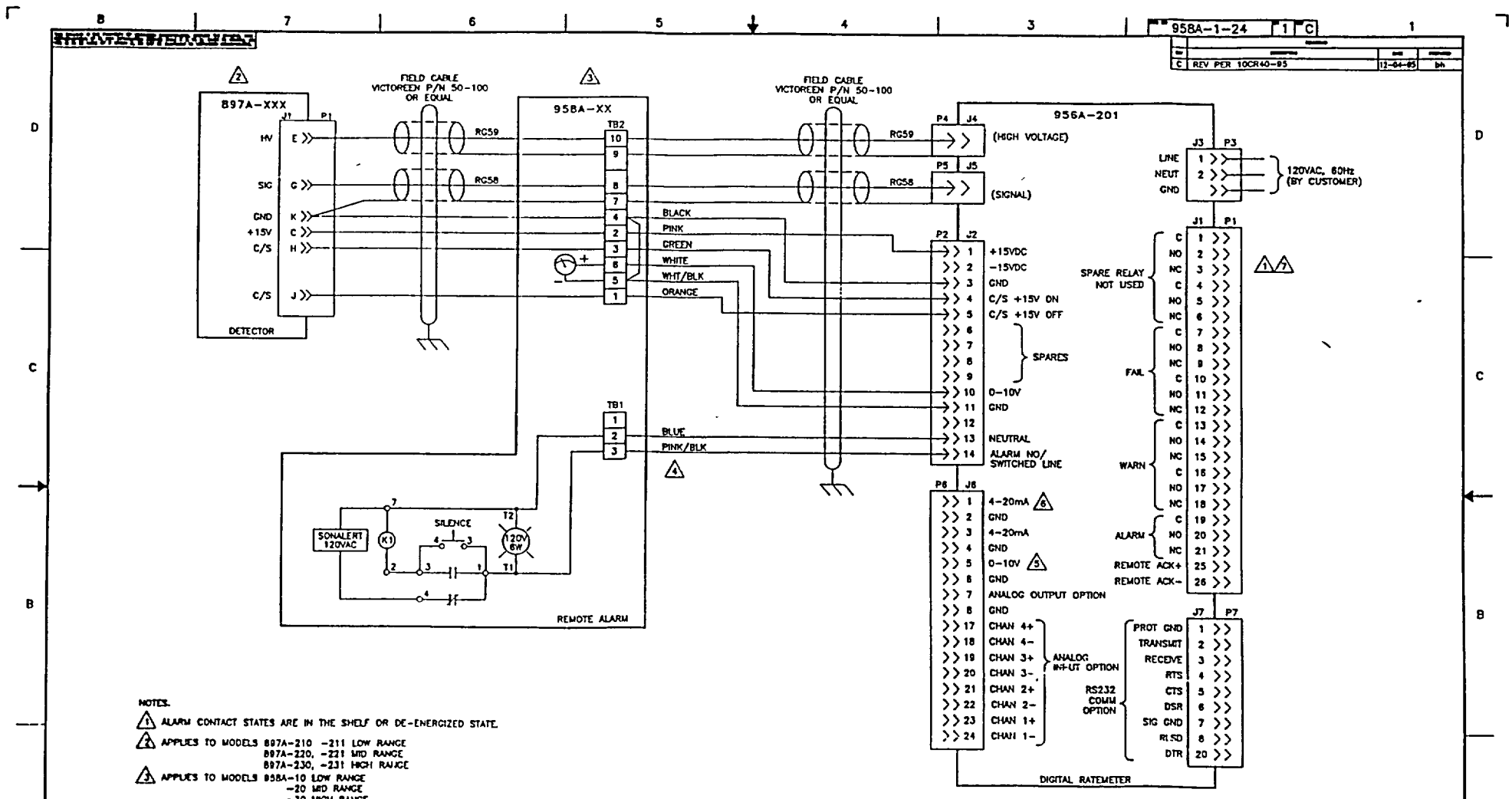

NOTES:

1. ALARM CONTACT STATES ARE IN THE SHELF OR DE-ENERGIZED STATE.
2. APPLIES TO MODELS 897A-210 -211 LOW RANGE
   897A-220, -221 MID RANGE
   897A-230, -231 HIGH RANGE
3. APPLIES TO MODELS 958A-10 LOW RANGE
   -20 MID RANGE
   -30 HIGH RANGE
   -40 SUPPLIED WITHOUT METER
4. WIRE COLORS APPLY TO 80-100 CABLE ONLY.
5. 0-10 VOLT ANALOG OUTPUT NOT AVAILABLE WHEN 958A REMOTE ALARM WITH METER IS INSTALLED.
6. MAXIMUM LOOP RESISTANCE 500 OHMS OR LESS ON 4-20mA OUTPUTS FACTORY CALIBRATION USES 250 OHMS +/- 1% LOAD
7. CUSTOMER CONTACTS RATED AT 5A 120VAC (RESISTIVE).

UNLESS OTHERWISE SPECIFIED DIMENSIONS ARE IN INCHES TOLERANCES ARE:
DECIMALS .XX=±.015 ±1° .XXX=±.005 ±1°
ANGLES
FINISH 125
REMOVE ALL BURRS & BREAK SHARP EDGES .005 TO .015

COMPUTER GENERATED DRAWING
S-282 A-1-24
MATERIAL
FINISH

NEXT ASSEMBLY USED ON
TPL 2-21-92
ARA 1-29-96
CW 1/8/96
N/A
1/31/96

VICTOREEN, INC.
6000 COCHRAN RD., SOLON, OHIO 44139

TITLE
EXTERNAL CONNECTION DIAGRAM

D 63060 958A-1-24 C
SCALE N/A DO NOT SCALE SHEET 1 OF 1

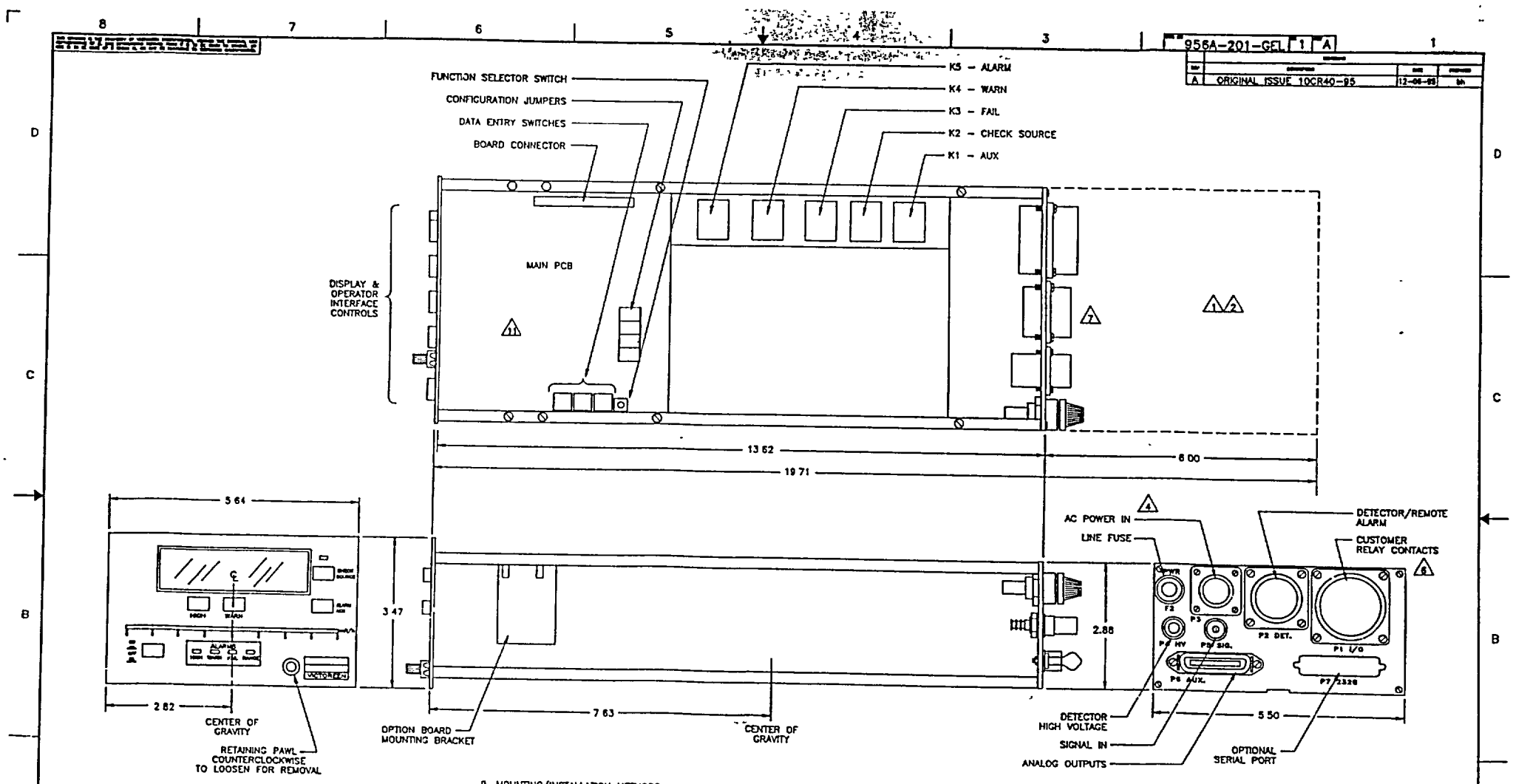

NOTES

1. ALLOW A MIN OF SIX INCHES BEHIND RATEMETER FOR CONNECTOR CLEARANCE AND SERVICE LOOP.
2. A MIN. 19" SERVICE LOOP SHOULD BE PROVIDED TO ALLOW FOR REMOVAL OF RATEMETER AND ADJUSTMENT NEEDS
3. WEIGHT AS SHOWN: 3.8 LBS.
4. POWER REQUIREMENTS: 120VAC +/-15%, 50-60 Hz
5. POWER CONSUMPTION: 28 WATTS AT 120VAC, 60 Hz
6. CONTACT RATING: 5A 120VAC (RESISTIVE)
7. MATING CONNECTOR KIT: 942A-100-4
8. DESIGN TOTAL INTEGRATED DOSE. 1.0E4 RADS
9. MOUNTING/INSTALLATION METHODS.
   9.1 – 19" 3-BAY RACK CHASSIS P/N 948-1-5
   9.2 – SINGLE TABLE TOP ENCLOSURE. P/N 948-3-5
   9.3 – SINGLE CHANNEL PANEL CUTOUT P/N 948-9-5
   9.4 – SPECIAL ADAPTOR FOR FORMER 942 SERIES INSTALLATION P/N 948-10-5
10. OPERATING/STORAGE TEMPERATURE RANGE. 32°F – 122°F/ 0°C – 50°C. FORCED AIR COOLING RECOMMENDED FOR HIGH DENSITY INSTALLATIONS. CONSULT FACTORY.
11. SPACE RESERVED FOR MOUNTING UP TO THREE OPTION BOARDS
    P/N 942-200-75 – ANALOG INPUT OPTION BOARD
    P/N 942-200-80 – COMMUNICATIONS INTERFACE BOARD
    P/N 942-200-95 – ANALOG OUTPUT OPTION BOARD
    P/N 942-200-95M – DIGITAL OUTPUT OPTION BOARD

REV	DESCRIPTION	DATE	APPROVED
A	ORIGINAL ISSUE 10CR40-95	12-06-95	bh

956A-201-GEL 1 A

UNLESS OTHERWISE SPECIFIED DIMENSIONS ARE IN INCHES TOLERANCES ARE: DECIMALS ± ANGLES ± FINISH .XX=±.015 ±1 DEG 125 .XXX=±.005 ±
REMOVE ALL BURRS & BREAK SHARP EDGES .005 TO .010

COMPUTER GENERATED DRAWING
S-369 | 1201-GEL
MATERIAL
FINISH

NEXT ASSEMBLY USED ON
bh 12-05-95
1-23-96
1-24-96
N/A

VICTOREEN, INC.
6000 COCHRAN RD., SOLON, OHIO 44139

TITLE
DIMENSIONAL OUTLINE

D 63060 956A-201-GEL A
SCALE 1/1 DO NOT SCALE SHEET 1 OF 1

956A-201-5 1 B

REV		DATE	
B	REV PER 10CR40-95	12-04-95	bh

NOTES.

1. POWER SUPPLY TRAY (ITEM 4) TO BE KEPT IN TEST POSITION UNTIL TESTING HAS BEEN COMPLETED
2. SHRINK TUBING (ITEM 28) TO BE USED ON ALL SOLDER CONNECTIONS

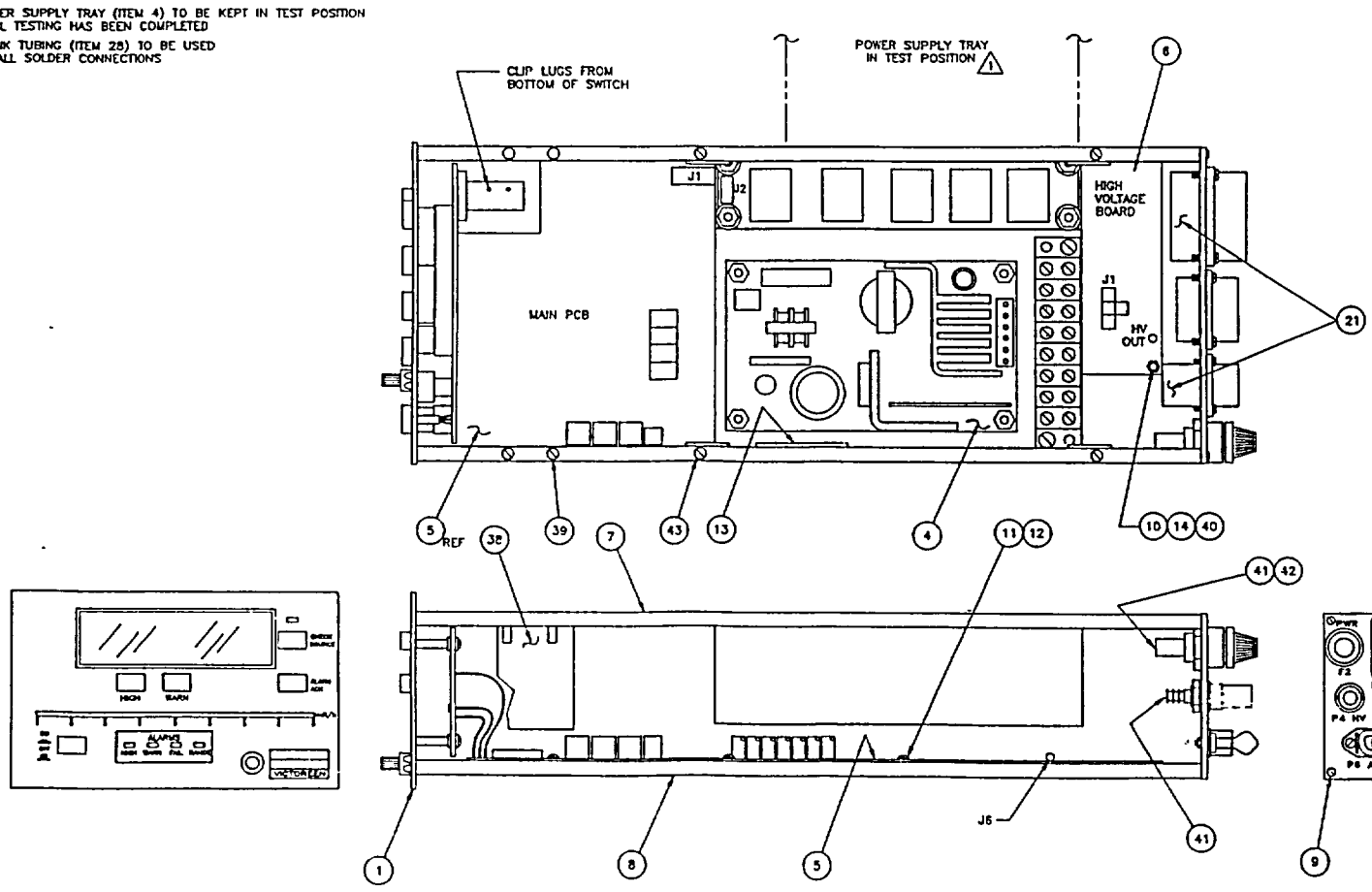

UNLESS OTHERWISE SPECIFIED DIMENSIONS ARE IN INCHES TOLERANCES ARE:
DECIMALS ANGLES FINISH
.XX=±.015 ±1 DEG 125
.XXX=±.005 ±
REMOVE ALL BURRS & BREAK SHARP EDGES .005 TO .010

COMPUTER GENERATED DRAWING
S-345 | 56A20151
MATERIAL
FINISH

NEXT ASSEMBLY USED ON
bh 3-14-95
ARA 1-23-96
APL 1-24-96
N/A

VICTOREEN, INC.
6000 COCHRAN RD., SOLON, OHIO 44139

TITLE
RATEMETER
MAIN ASSEMBLY

D 63060 956A-201-5 B

SCALE 1/1 DO NOT SCALE SHEET 1 OF 2

WIRE LIST

NOTE. SHRINK TUBING TO BE USED ON ALL SOLDER CONNECTIONS

PLUG IN THE FOLLOWING CONNECTORS.

1. 2 POS. CONN. CONNECT MAIN PCB (J9) TO REAR PANEL (P1)
2. 10 POS. CONN (942A-100-35C HARNESS) CONNECT MAIN PCB (J5) TO REAR PANEL (P6)
3. 6 POS. CONN (942-100-35A HARNESS) CONNECT MAIN PCB (J1) TO POWER SUPPLY (TB)
4. 6 POS. CONN (942-100-35B HARNESS) CONNECT MAIN PCB (J2) TO RELAY BOARD (J2)
5. COAX CONN. CONNECT MAIN PCB (J6) TO REAR PANEL (P5)

REAR PANEL P1 CONNECTOR

PIN NO	COLOR	REFERENCE
26	YELLOW/BROWN	MAIN PCB (J9-2)
25	YELLOW/BLACK	MAIN PCB (J9-1)
24	SPARE	
23	SPARE	
22	SPARE	
21	WHITE/BLACK/GREEN	956A-201-70A HARNESS
20	WHITE/BLACK/YELLOW	" "
19	WHITE/BLACK/ORANGE	" "
18	WHITE/BLACK/BROWN	" "
17	WHITE/BLACK/RED	" "
16	WHITE/GRAY	" "
15	WHITE/VIOLET	" "
14	WHITE/BLUE	" "
13	WHITE/GREEN	" "
12	WHITE/ORANGE	" "
11	WHITE/YELLOW	" "
10	WHITE/RED	" "
9	WHITE/BROWN	" "
8	WHITE/BLACK	" "
7	GRAY	" "
6	BLUE	" "
5	VIOLET	" "
4	YELLOW	" "
3	ORANGE	" "
2	RED	" "
1	BROWN	" "

REAR PANEL P2 CONNECTOR

PIN NO	COLOR	REFERENCE
14	YELLOW/BLUE	956A-201-70A HARNESS
13	WHITE	942-100-35E HARNESS
11	YELLOW/BLACK/BLUE	TO P6-5 (REAR PANEL)
10	YELLOW/BLACK/VIOLET	TO P6-6 (REAR PANEL)
5	YELLOW/BLUE/VIOLET	956A-201-70A HARNESS
4	YELLOW/GREEN	" "
3	BLACK (18AWG)	942-100-35D HARNESS
2	ORANGE (18AWG)	" "
1	RED (18AWG)	" "

P3 CONNECTOR

PIN NO	COLOR	REFERENCE
3	GREEN	942-100-35E HARNESS
2	WHITE	" "
1	BLACK	TO FUSE F1

REAR PANEL P6 CONNECTOR

PIN NO	COLOR	REFERENCE	MAIN BOARD
8	YELLOW/VIOLET	942A-100-35C HARNESS	J5-3
7	YELLOW/WHITE	" "	J5-4
6	YELLOW/BLACK/BLUE	" "	J5-9
5	YELLOW/BLACK/VIOLET	" "	J5-10
4	YELLOW/BLACK/BROWN	" "	J5-5
3	YELLOW/BLACK/RED	" "	J5-6
2	YELLOW/BLACK/ORANGE	" "	J5-7
1	YELLOW/BLACK/GREEN	" "	J5-8

MISC CONNECTIONS

P3-1	BLACK	TO F2 REAR LUG (REAR PANEL)
POWER SW -1A	BLACK	TO F2 SIDE LUG (942-100-35E HARNESS)
POWER SW - 1B	BLACK	AC LINE TO TB1-6
HV BOARD-HV	RED	TO P4 CENTER (REAR PANEL)
HV BOARD-J1-3	YELLOW/GREEN	TO P4 LUG (REAR PANEL)
MAIN PCB-J6	COAX	TO P5 CENTER COND. (REAR PANEL)
	SHIELD	TO P5 LUG (REAR PANEL)

MISC. CONNECTIONS CONT'D

POWER SUPPLY +5/TB1-4	BLUE 18AWG (2)	942-100-35A HARNESS
POWER SUPPLY GND/TB1-3	BLACK 18AWG (2)	" "
POWER SUPPLY +15/TB1-5	RED 18AWG	942-100-35A & 35D HARNESS
POWER SUPPLY -15/TB1-1	ORANGE 18AWG (2)	" "
POWER SUPPLY GND/TB1-2	BLACK 18AWG (1)	942-100-35D HARNESS
POWER SUPPLY-CHASSIS GND/TB1-8	GREEN	942-100-35E HARNESS
POWER SUPPLY-N/TB1-7	WHITE (2)	" "
POWER SUPPLY-L/TB1-6	BLACK	956A-201-70A HARNESS
POWER SUPPLY-L/TB1-6	YEL/BLUE	" "
POWER SUPPLY +15/TB1-5	RED 22AWG	" "

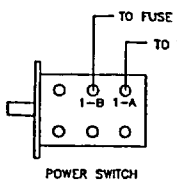

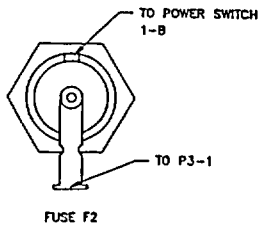

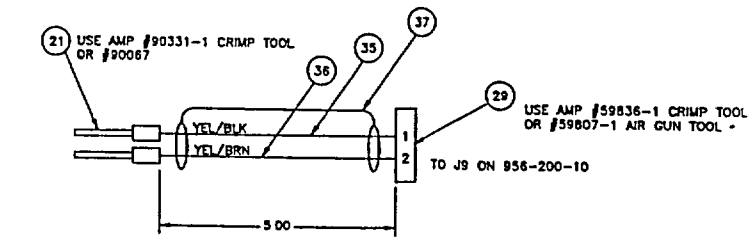

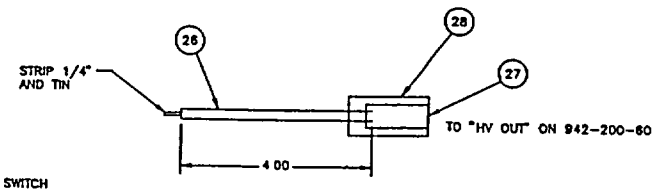

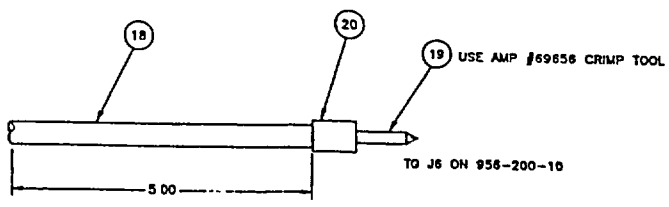

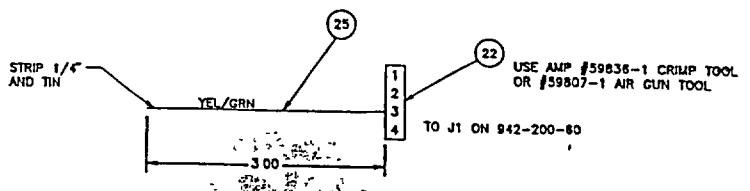

VICTOREEN, INC.

S-345	58A20152	bh	12-04-95	D63060	956A-201-5 B
		N/A		SCALE n/a	DO NOT SCALE SHEET 2 OF 2

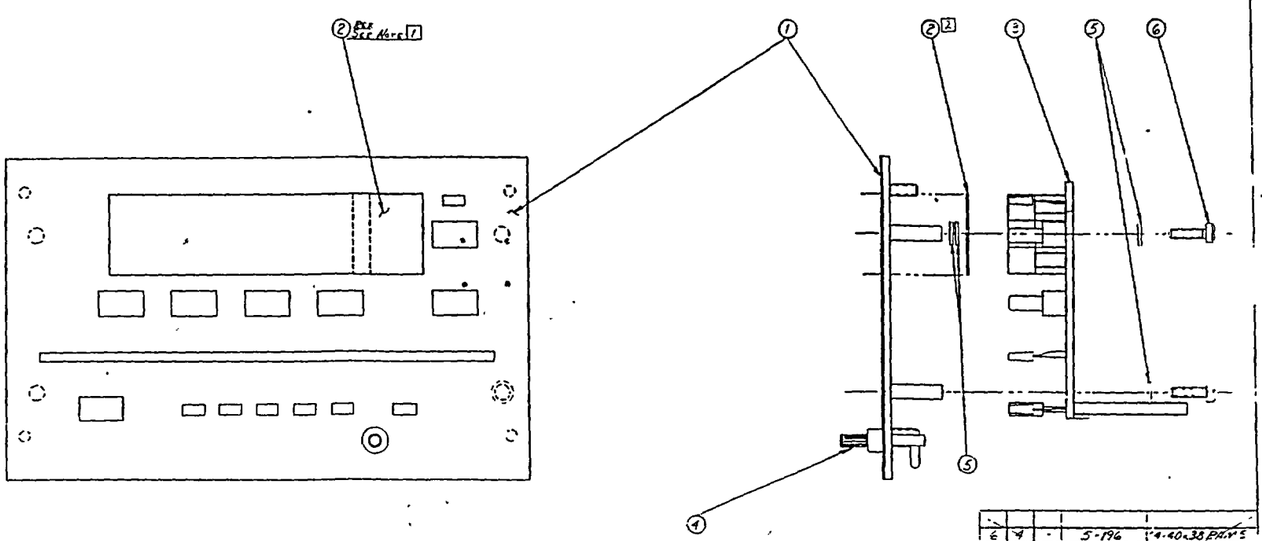

ITEM	REQD	DWG SIZE	PART NO	NAME
6	4		5-196	4-40x38 PAN'S
5	5		5-841	#4 FLAT WASHER NL
4	1		822-L51	PANEL FASTENER
3	1	D	956-100-15	FRONT PANEL PC BD
2	1	ASY WORK	946-100-23	BACKLITE INSERT
1	1	D	956A-100-22	FRONT PANEL DECAL

SUPERSEDES DRAWING

VICTOREEN, INC
DIVISION OF SHELLER-GLOBE CORP

PART NO | NAME: FRONT PANEL ASSY
MATERIAL

SIZE D | DWG NO 956A-100-20 | REV E
SCALE | SH 1 OF 1

NEXT ASSY | USED ON
APPLICATION

PARTS LIST & LAST GENERAL REVIEW
BY AMPE DATE 10-23-84

REV	DESCRIPTION	DATE	BY	CHK	APP
B	REDRAWN (ECN 10-89)				
A	ORIG. ISSUE (ECN)				

NOTES: 1. BACKLITE INSERT TO BE FIT IN SMALL CUTOUT PRIOR BEFORE SECURING PC BOARD.

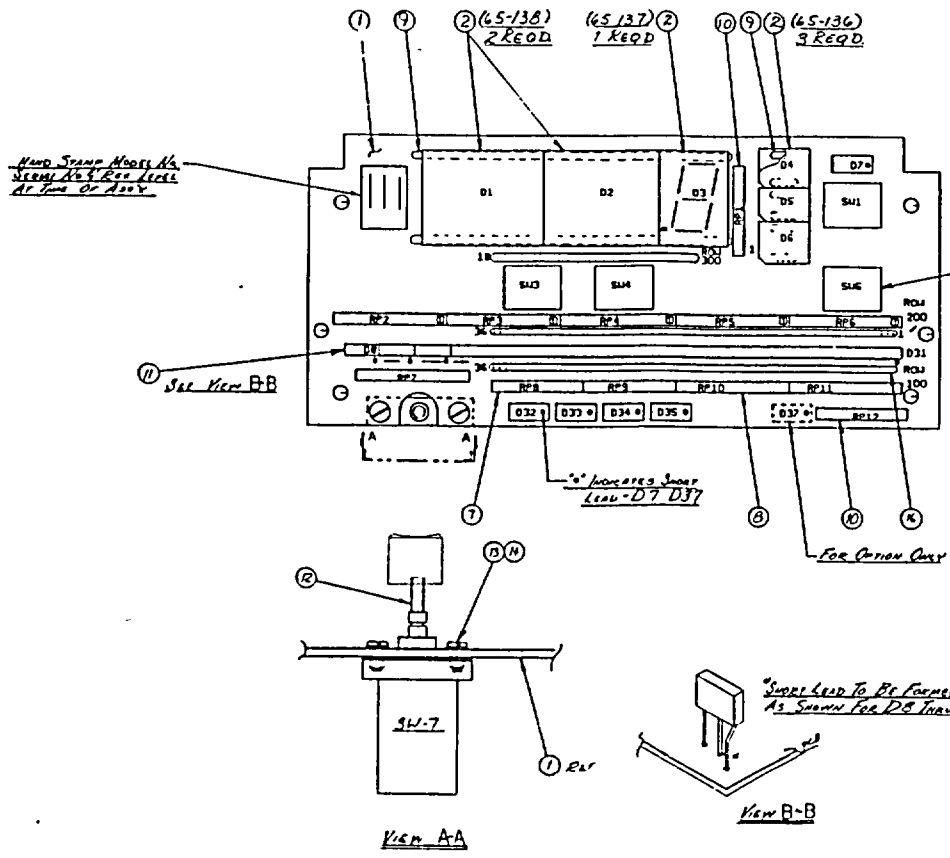

PARTS LIST LAST GEN'RAL REVIEW
B. MAP DATE 7-26-89

DESIGNATION	ITEM	REQD	DWG SIZE	PART NO.	NAME
	19	REF	A	942-100-43	LED POSITIONER ASS
	18	REF	A	942-100-42	LED POSITIONER
	17	1	-	956-003	TRAVELER
	16	3	-	67-90-36	HEADER STRIP
SW 7	15	2	-	5-746	#8 FLAT WASHER
SW 7	14	2	-	5-86	#2-56 x .25 PH.HS.
SW 7	13	2	-	5-848	#2-56 HEX NUT
SW7	12	1		11-210	POWER SWITCH
D1-D31, D33 D35-D37	11	29	B	65-141	LED RECTANGULAR Yellow
RP8-12	10	2		185-3974-2	RESISTOR NETWORK, 220
	9	2		67-72	SOCKET STRIP
RP2-7, 10-11	8	8		185-3971-2	RESISTOR NETWORK, 10K
RP8-9	7	2		185-3978-3	RESISTOR NETWORK, [illegible]
SW 1,3,4,6,7	6	5	B	9-89	SWITCH CAP GRAY
SW 1,3,4,6	5	4	B	11-208	MOMENTARY, PC MOUNT
	4	1	P	65-937	[illegible]
	3	[illegible]	D	.136	LED [illegible]
D1-D6	2	1	A	942-100-27	UDR DISPLAY KIT
	1	1	D	942-100-16	PROCESSED PC PANEL ASS

SUPERSEDES DRAWING

THIS DRAWING IS THE PROPERTY OF VICTOREEN, INCORPORATED. NEITHER THE DRAWING, NOR IN PRODUCTIONS OF IT, NOR INFORMATION REVEALED PRINT IS TO BE GIVEN TO OTHERS, NOR USED, TO BE MADE OF IT WHICH IS, OR MAY BE PREJUDICIAL TO VICTOREEN INCORPORATED.

UNLESS OTHERWISE SPECIFIED
DIMENSIONS ARE IN INCHES
MACH. [illegible] x P
SURFACE FINISH [illegible] OR BETTER
DIMENSIONS ±0.010 x P
DIMENSIONS ±0.005 x P
DIMENSIONS SHOWN IN A [illegible] AND MORE CRITICAL THAN MILITARY STANDARDS.

NEXT ASSY | USED ON
APPLICATION

VICTOREEN, INC.
DIVISION OF SHELLER-GLOBE CORP

PART NO. | NAME: FRONT PANEL PC ASS.
MATERIAL | FINISH
SIZE D | DWG NO. 956-100-15 | REV C
SCALE: - 2:1 | SH 1 OF 1

C	REV PER ECR 14-91	[illegible]	[illegible]
B1	REV PER ECR 47-89	[illegible]	[illegible]
B	REV PER ECR 43-87	[illegible]	[illegible]
A	ORIGINAL ISSUE	[illegible]	[illegible]
REV	DESCRIPTION	[illegible]	[illegible]

NOTES:
1. D7 D37 MUST BE AT THE SAME HEIGHT AS DETERMINED BY LED POSITIONER
2. INSTALL RP 300 (ITEM 16) AFTER SW 2,3 & 5 HAVE BEEN INSTALLED

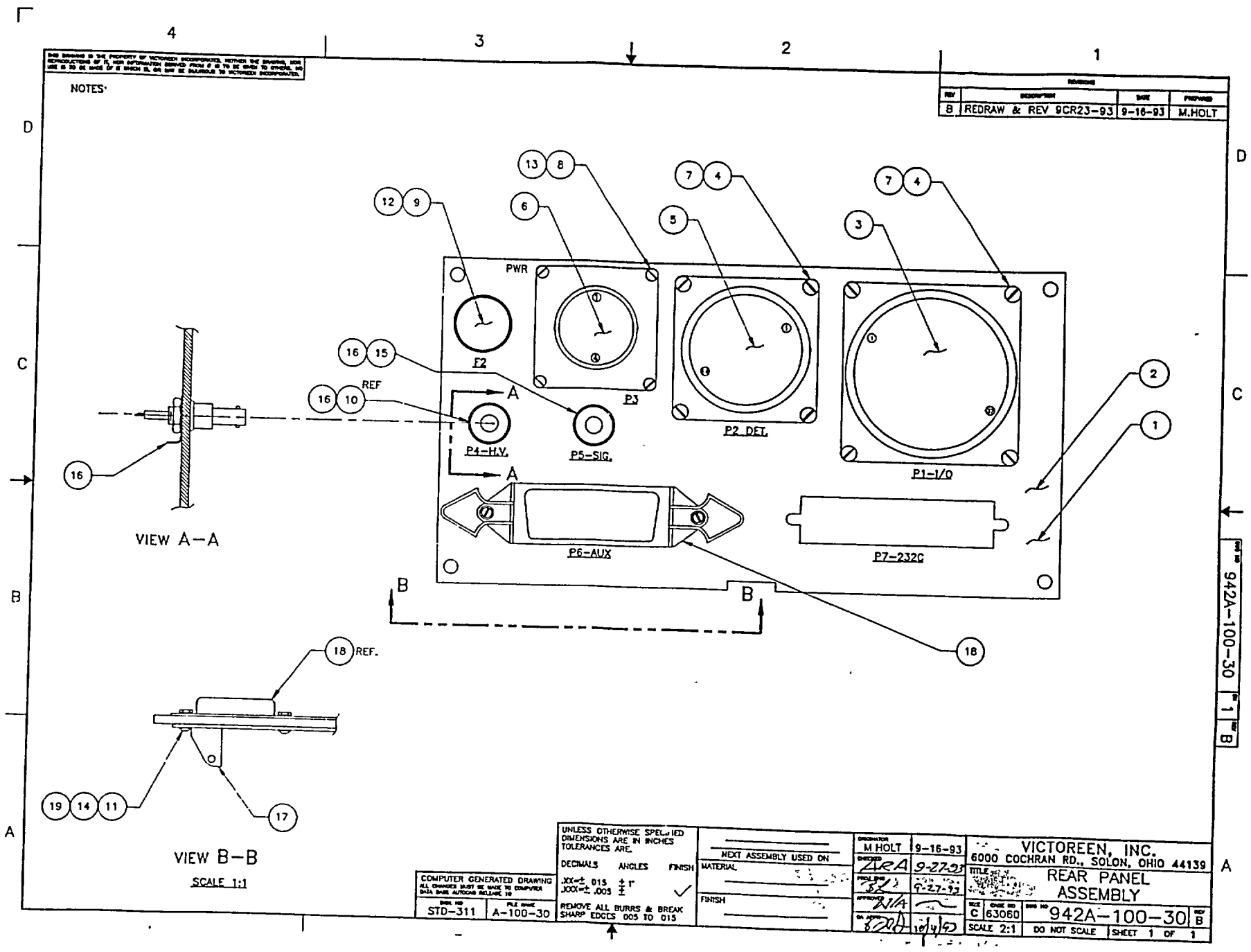
NOTES:
REVISIONS
B REDRAW & REV 9CR2J-93 9-16-93 M.HOLT
PWR
F2
P3
P2 DET.
P1-I/O
P4-H.V.
P5-SIG.
P6-AUX
P7-232C
REF
VIEW A-A
VIEW B-B
SCALE 1:1
18 REF.
UNLESS OTHERWISE SPECIFIED DIMENSIONS ARE IN INCHES TOLERANCES ARE
DECIMALS ANGLES FINISH
.XX=± .015 ± 1°
.XXX=± .005 ±
REMOVE ALL BURRS & BREAK SHARP EDGES .005 TO .015
COMPUTER GENERATED DRAWING
STD-311
A-100-30
NEXT ASSEMBLY USED ON
MATERIAL
FINISH
M HOLT 9-16-93
9-27-93
9-27-93
N/A
10/4/93
VICTOREEN, INC.
6000 COCHRAN RD., SOLON, OHIO 44139
REAR PANEL ASSEMBLY
C 63060 942A-100-30 B
SCALE 2:1 DO NOT SCALE SHEET 1 OF 1
942A-100-30 1 B

REV	DESCRIPTION	DATE	PROPERED
A	ORIGINAL ISSUE 3JR4-95	3-14-95	bh

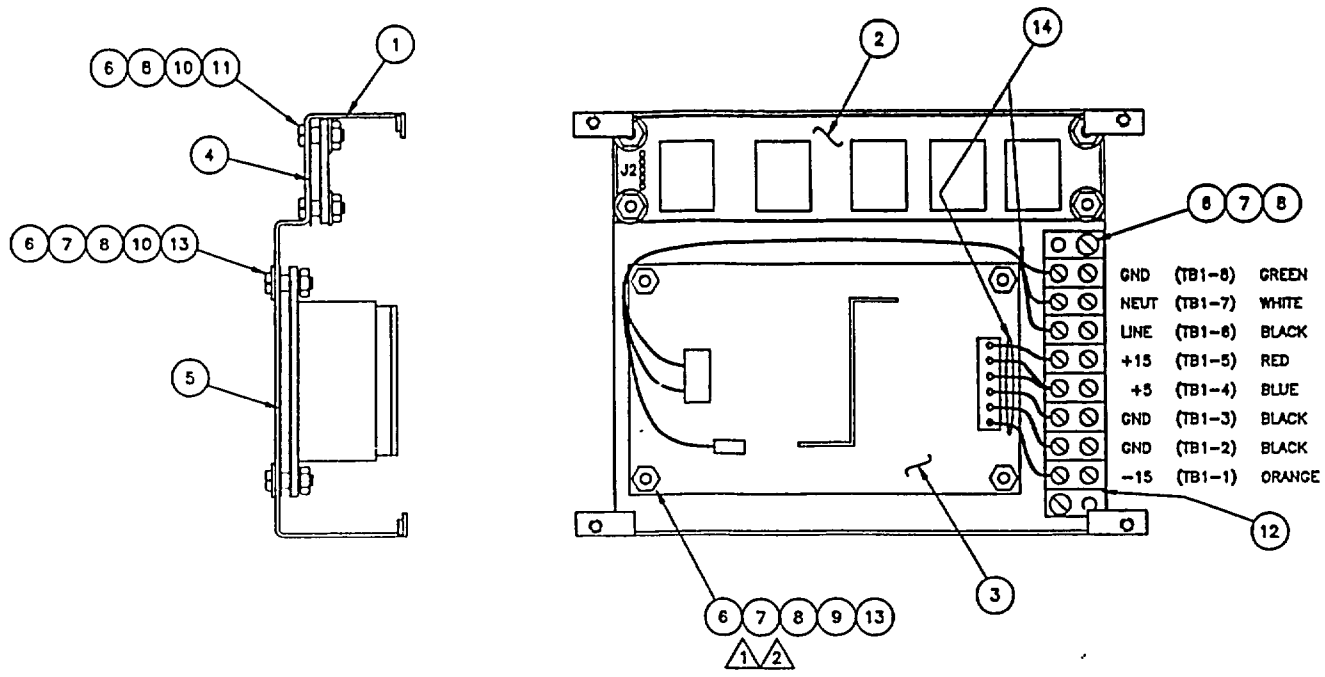

NOTES

1. STAINLESS STEEL SPACER TO BE USED HERE FOR GROUNDING
2. ITEM 13, FLATWASHER, IS INSTALLED ON THE UNDERSIDE OF ITEM 1, BRACKET

COMPUTER GENERATED DRAWING

DWG NO	FILE NAME
S-345	201-55

UNLESS OTHERWISE SPECIFIED DIMENSIONS ARE IN INCHES TOLERANCES ARE.

DECIMALS	ANGLES	FINISH
.XX=±.015	±1 DEG	125
.XXX=±.005	±	

REMOVE ALL BURRS & BREAK SHARP EDGES .005 TO .015

NEXT ASSEMBLY USED ON

MATERIAL

FINISH

DRAWN	bh	3-14-95
CHECKED	ARA	6-12-95
ENGR APPROVAL	RAH	7-10-95
MFG APPROVAL	N/A	
Q.A.		7-10-95

VICTOREEN, INC.
6000 COCHRAN RD., SOLON, OHIO 44139

TITLE ASSEMBLY, POWER SUPPLY BRACKET

SIZE	CAGE NO.	DWG NO.	REV
C	83060	956A-201-55	A

SCALE 1/1 | DO NOT SCALE | SHEET 1 OF 1

956A-201-55 | 1 | A

REV	ECO NO.	REL. FOR ENGR. USE ONLY ☐	RELEASED FOR PRODUCTION ☒	ENG.	DATE
2	1386				

NOTES

1 CRIMP PINS TO WIRES USING AMP 90067-5 CRIMP TOOL

2 CRIMP TERMINAL USING BURNDY #MR8-33T-1N CRIMP TOOL

3 INSTALL TIES AFTER CONNECTIONS ARE MADE TO REAR PANEL AT MAIN ASSEMBLY

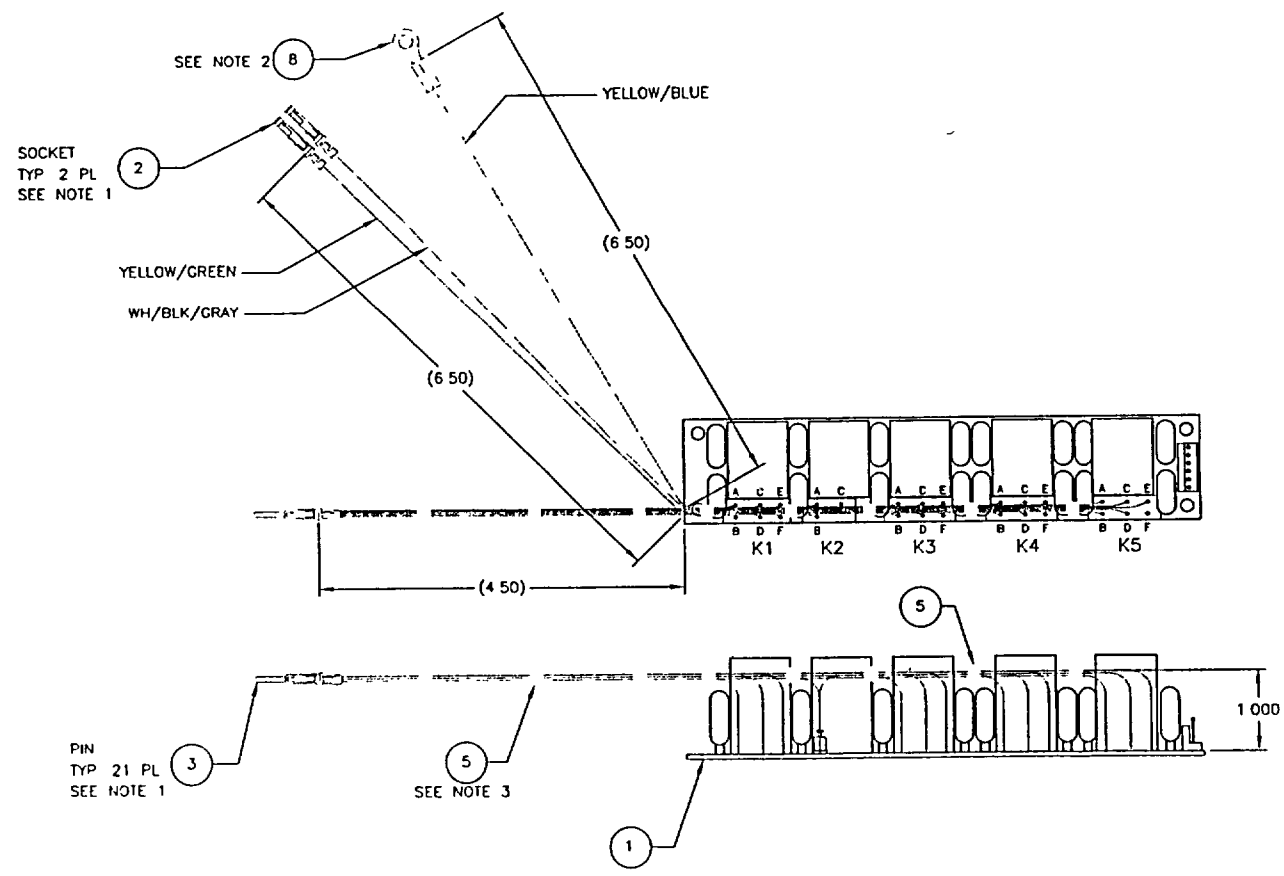

UNLESS OTHERWISE SPECIFIED DIMENSIONS ARE IN INCHES TOLERANCES ARE DECIMALS ANGLES FINISH XX=± 015 ± 1° XXX=± 005 ± 1° 63 REMOVE ALL BURRS & BREAK SHARP EDGES .005 TO 015	ORIGINATOR MH 9/24/92 CHECKED PROJ ENG APPROVED BA APPR	INOVISION INDIATION MEASUREMENTS 6946 GOODMAN ROAD DELON, OHIO 44139	TITLE HARNESS ASS'Y RELAY BOARD
		SIZE C / CAGE NO 1JZH3 / DWG NO 942A-100-70A / REV 2	
		SCALE 1/1 / DO NOT SCALE	SHEET 1 OF 1

942A-100-70A

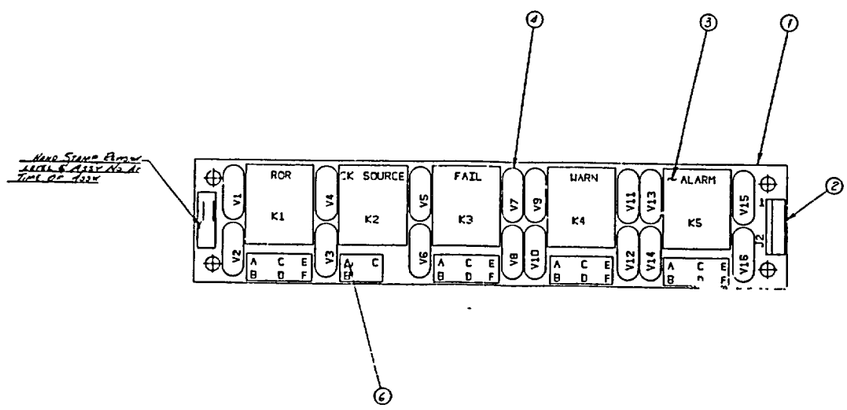

PARTS LISY LAST GENERAL REVIEW BY MAP DATE 4.18.85

DESIGNATION	ITEM	REQD	DWG SIZE	PART NO.	NAME
SHOWN ⊗	6	1	-	92-9019-A	TERMINAL
	5	1	-	942-005	TRAVELER
V1-V16	4	16	-	92-6035-A	MOV, V130LA10A
K1-K5	3	5	-	82 73-1	RELAY, 12V, 5A, 12VDC
J2	2	1	-	67-76-6	CONNECTOR
[illegible]	1	1	D	942-100 71	PROCESSED RELAY BOX

SUPERSEDES DRAWING

THIS DRAWING IS THE PROPERTY OF VICTOREEN, INCORPORATED AND THIS THE DRAWING NOR REPRODUCTIONS OF ITS NOR INFORMATION SHOWS THEREON TO BE LOANED TO OTHERS, NOR USED FOR MANUFACTURE OR SALE OF ANYTHING NOT BE BELONGING TO VICTOREEN INCORPORATED.

UNLESS OTHERWISE SPECIFIED DIMENSIONS ARE IN INCHES
ANGLES ± 1 DEGREE
SURFACE FINISH 125 OR BETTER
CHAMFER ANGLES 45°
CHAMFER LENGTH = 1 PER 2 THICKNESS
BREAK SHARP EDGES
MATERIALS, PROCESSES AND PRACTICES CONFORM TO VICTOREEN INDUSTRY STANDARDS

REV	DESCRIPTION	DR	CK	ENG	MFG	QA
A	REV PER ECO 9[illegible]	[illegible]	[illegible]	[illegible]	[illegible]	[illegible]
	ORIGINAL ISSUE	[illegible]	[illegible]	[illegible]	[illegible]	[illegible]

NEXT ASSY | USED ON
APPLICATION

VICTOREEN, INC.
DIVISION OF SHELLER-GLOBE CORP

PART NO. | NAME: Relay Box Assy
MATERIAL | FINISH
SIZE: D | DWG NO.: 942-100-70 | REV: A
SCALE: 1:1 | SH 1 OF 1

THIS DRAWING IS THE PROPERTY OF VICTOREEN INCORPORATED. NEITHER THE DRAWING, NOR REPRODUCTIONS OF IT, NOR INFORMATION DERIVED FROM IT IS TO BE GIVEN TO OTHERS, NO USE IS TO BE MADE OF IT WHICH IS, OR MAY BE INJURIOUS TO VICTOREEN INCORPORATED.

DWG NO 942-200-50 SH 1 REV B

REVISIONS			
REV	DESCRIPTION	DATE	PREPARED
B	REV PER 2CR39-95	3-01-95	bh

MANUFACTURER & PART NUMBER
ASTEC: RBT45
KEPCO: KRW 351KV

TEMPERATURE RANGE: 0°C TO 50°C

DC OUTPUT: SEE TABLE BELOW

REGULATION:
PRIMARY OUTPUT: +/− 5% MAX. UNDER ANY CONDITION

SECONDARY OUTPUTS: +/− 7% UNDER ANY CONDITION

OUTPUT RIPPLE & NOISE: MAX. 1% PEAK TO PEAK

OSCILLATOR FREQUENCY, ASTEC RBT45: 50KHz

OSCILLATOR FREQUENCY, KEPCO KRW351KV: 100KHz

AC INPUT: 90 VAC TO 240 VAC

FREQUENCY RANGE: SINGLE PHASE 47−67 Hz

MINIMUM LOAD: 20% OF MAX. RATED CURRENT EACH POST
NO MIN. REQUIRED FOR OUTPUT 3

EMI: FCC 20780 CLASS B, VDE 0871, LEVEL B

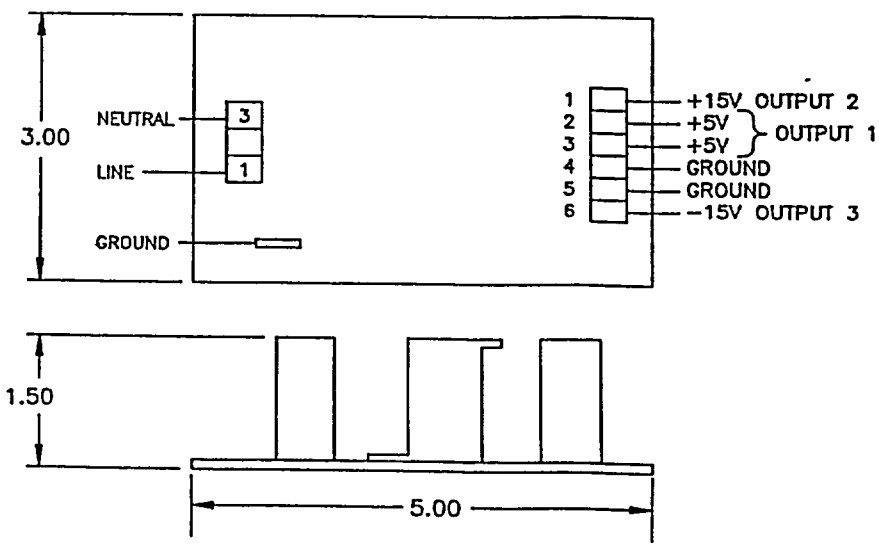

ALL DIMENSIONS ENGINEERING REFERENCE

OUTPUT SPECIFICATIONS				
MFR.	MFR. P/N	OUTPUT 1	OUTPUT 2	OUTPUT 3
ASTEC	RBT45	+5/3A	+15/2.0A	−15/0.5A
KEPCO	KRW351KV	+5/3A	+15/1.6A	−15/0.1A

COMPUTER GENERATED DRAWING
ALL CHANGES MUST BE MADE TO COMPUTER DATA BASE AUTOCAD RELEASE 10
DESK NO S-323 | FILE NAME 200-50

UNLESS OTHERWISE SPECIFIED DIMENSIONS ARE IN INCHES
TOLERANCES ARE:
DECIMALS .XX=± .015 .XXX=± .005 ANGLES ± 1 DEG FINISH 125
REMOVE ALL BURRS & BREAK SHARP EDGES .005 TO .015

NEXT ASSEMBLY USED ON
MATERIAL
FINISH

ORIGINATOR	bh	5-23-94
CHECKED	ARA	3-6-95
PROJ ENG		3-7-95
APPROVED	N/A	
QA APPR		3/9/95

VICTOREEN, INC.
6000 COCHRAN RD., SOLON, OHIO 44139

TITLE POWER SUPPLY

SIZE	CAGE NO	DWG NO	REV
B	63060	942-200-50	B

SCALE 1/1 | DO NOT SCALE | SHEET 1 OF 1

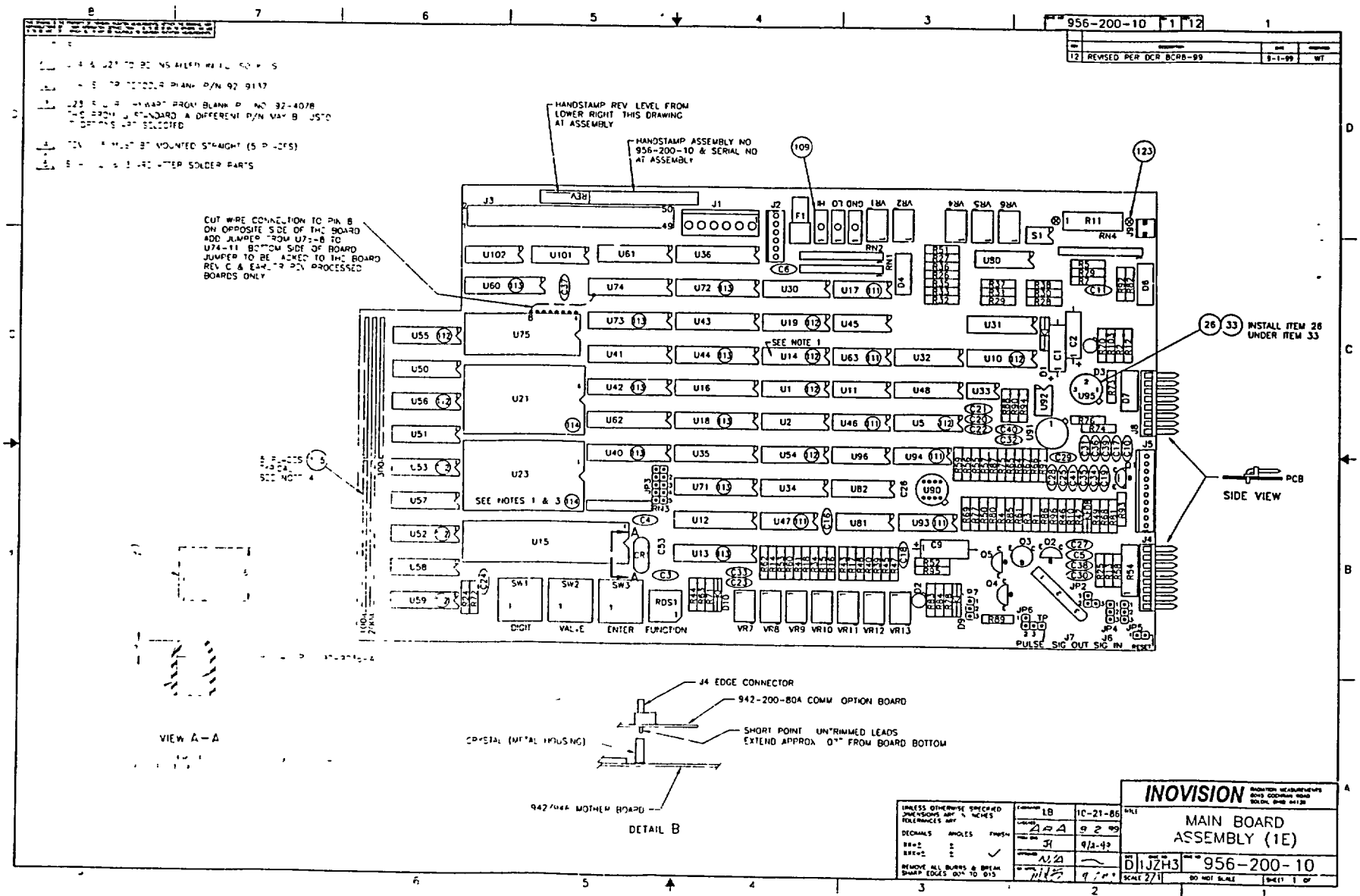
956-200-10
REVISED PER DCR BCRB-99
HANDSTAMP REV LEVEL FROM LOWER RIGHT THIS DRAWING AT ASSEMBLY
HANDSTAMP ASSEMBLY NO 956-200-10 & SERIAL NO AT ASSEMBLY
CUT WIRE CONNECTION TO PIN 8 ON OPPOSITE SIDE OF THE BOARD ADD JUMPER FROM U73-8 TO U74-11 BOTTOM SIDE OF BOARD JUMPER TO BE TACKED TO THE BOARD REV C & EARLIER PIN PROCESSED BOARDS ONLY
INSTALL ITEM 26 UNDER ITEM 33
SIDE VIEW
PCB
SEE NOTES 1 & 3
SEE NOTE 1
DIGIT
VALUE
ENTER
FUNCTION
PULSE
SIG OUT
SIG IN
RESET
VIEW A-A
J4 EDGE CONNECTOR
942-200-80A COMM OPTION BOARD
SHORT POINT UNTRIMMED LEADS EXTEND APPROX 0.7" FROM BOARD BOTTOM
CRYSTAL (METAL HOUSING)
942/944 MOTHER BOARD
DETAIL B
INOVISION
MAIN BOARD ASSEMBLY (1E)
D 1JZH3 956-200-10
SCALE 2/1
DO NOT SCALE

REV	ECO NO	REL FOR ENGR. USE ONLY ☐	RELEASED FOR PRODUCTION ☒	DATE
2	1379			1/4/92

NOTES

1. SCREW PROVIDED WITH TRANSFORMER (ITEM 2) IS TOO LONG SUBSTITUTE WITH ITEM 46

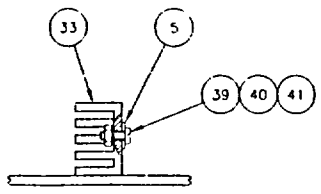

VIEW A–A
SCALE NONE

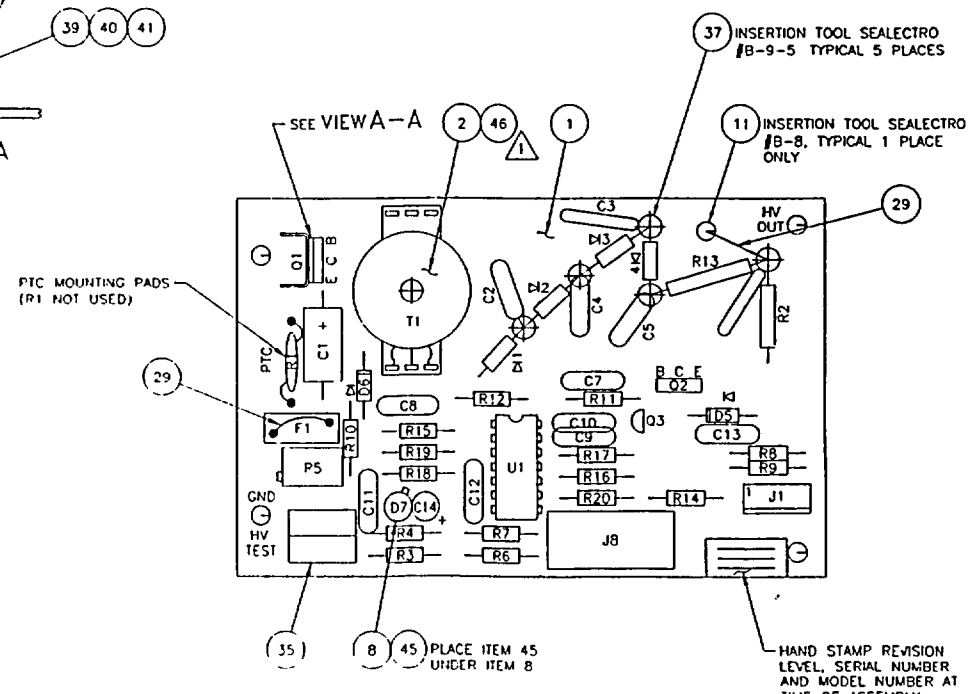

ORIGINAL!!

UNLESS OTHERWISE SPECIFIED DIMENSIONS ARE IN INCHES TOLERANCES ARE					
DECIMALS	ANGLES	FINISH	ORIGINATOR LB	9-15-86	INOVISION
XX=± .015	± 1°	63 ✓	CHECKED		TITLE ASSEMBLY, HIGH VOLTAGE BOARD
XXX=± .005	± 1°		PROJ ENG		
REMOVE ALL BURRS & BREAK SHARP EDGES .005 TO .015			APPROVED		SIZE C · CAGE NO 1JZH3 · DWG NO 942-200-60 · REV 2
			QA APPR		SCALE 2/1 · DO NOT SCALE · SHEET 1 OF 1

942-200-60

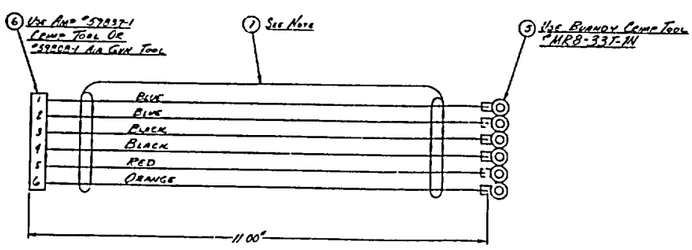

PARTS LIST LAST GENERAL REVIEW BY HMP DATE 5-1-83

ITEM	REQD	DWG SIZE	PART NO.	NAME
7	10'	-	SM2202	SPIRAL WRAP
6	1	-	67-79-6	6 POSITION CONN.
5	6	-	96-86	3 RING LUGS
4	11	22	MSB-0071-8	#18 AWG-ORANGE
3	11	-	MSB-0071-5	#18 AWG-RED
2	22	-	MSB-0071-2	#18 AWG-BLK
1	22	-	MSB-0071-1	#18 AWG-BLACK

SUPERSEDES DRAWING

VICTOREEN INC. ROLLER-GLIDE CORP.

PART NAME: POWER SUPPLY 12V PCB/HARNESS

MATERIAL

FINISH

SIZE D

DWG NO. 67-79-1

REV. C

SCALE NONE

DESIGNALT ISSUE

DRAWN

CHECKED

ENGRY ASSY

APPLICATION

NOTE: INSTALL SPIRAL WRAP (ITEM 7) AROUND WIRE BUNDLE TO COMPLETE ASSY.

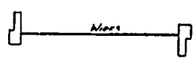

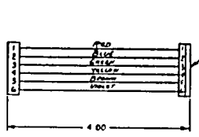

(7) Use Amp #59836-1 Crimp Tool
Or Amp #59807-1 Air Gun Tool

PARTS LIST LAST GENERAL REVIEW BY AMP DATE 7-1-83

ITEM	REQD	DWG SIZE	PART NO.	NAME
7	2	B	67-78-6	6 Position Conn
6	3'	-	MSB 0072 11	#22 AWG - Violet
5	3'	-	MSB-0072 8	#22 AWG - Brown
4	3'	-	MSB-0072-6	#22 AWG - Yellow
3	3'	-	MSB 0072 4	#22 AWG - Green
2	3'	-	MSB-0072-7	#22 AWG - Blue
1	3'	-	MSB-0072-3	#22 AWG - Red

UNLESS OTHERWISE SPECIFIED
DIMENSIONS ARE IN INCHES
ANGLES ± 1°
MACHINED FINISH 125 OR BETTER
CHAMFER ANGL 2 × 45°
CHAMFER LENG TH 1 × 30°
CHAMFER DIAMETER 1 × 45°
UNLESS NOTED CONFORMS TO APPLICABLE INDUSTRY STANDARDS.

SUPERSEDES DRAWING

THIS DRAWING IS THE PROPERTY OF VICTOREEN INCORPORATED. BY THIS THE DRAWING, NOR REPRODUCTION OF IT, NOR INFORMATION CONTAINED THEREIN, NOR A PRODUCT DERIVED FROM IT, IS TO BE MADE OR PERMITTED TO BE MADE AVAILABLE TO VICTOREEN INCORPORATED.

VICTOREEN, INC.
DIVISION OF SHELLER-GLOBE CORP

PART NO.
NAME Assy Pt. Pr. To Buoy Cable Harness
MATERIAL
FINISH

REV	DESCRIPTION	DATE	BY	CHK	APP
B	REV PER ECO 3C29-90	7-1-83			
A	Original Issue	7-8-83			

NEXT ASS'Y
USED ON
APPLICATION

SIZE D DWG NO. 942-100-358. REV B
SCALE: 1:1 SH 1 OF 1

ITEM	QTY	CODE DATE	PART NO	DESCRIPTION
1	5"	-	MSB-0072-37	#22 AWG - YEL/VIOLET
2	5"	-	MSB 0072-38	#22 AWG - YEL/WHITE
3	5"	-	MSB-0072-39	#22 AWG - YEL/BLK/BROWN
4	5"	-	MSB 0072-40	#22 AWG - YEL/BLK/RED
5	5"	-	MSB-0072-41	#22 AWG - YEL/BLK/ORANGE
6	5"	-	MSB-0072-42	#22 AWG - YEL/BLK/GREEN
7	10"	-	MSB-0072-43	#22 AWG - YEL/BLK/BLUE
8	10"	-	MSB-0072-44	#22 AWG - YEL/BLK/VIOLET
9	1	-	67-78-10	10 POSITION CONN.
10	2	-	67-83-15	FEMALE CRIMP PIN
11	45"	-	SM-2202	SPIRAL WRAP
12	2	-	67-99	DISPLACEMENT SPLICE

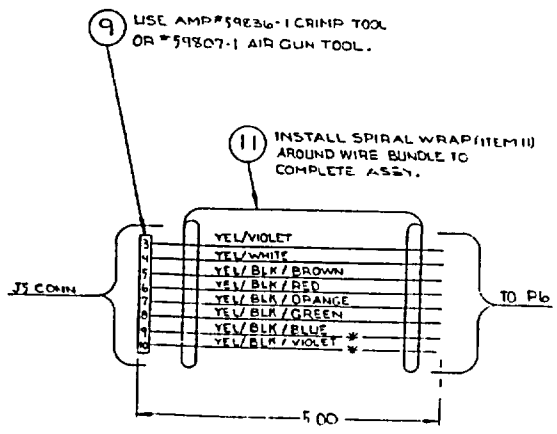

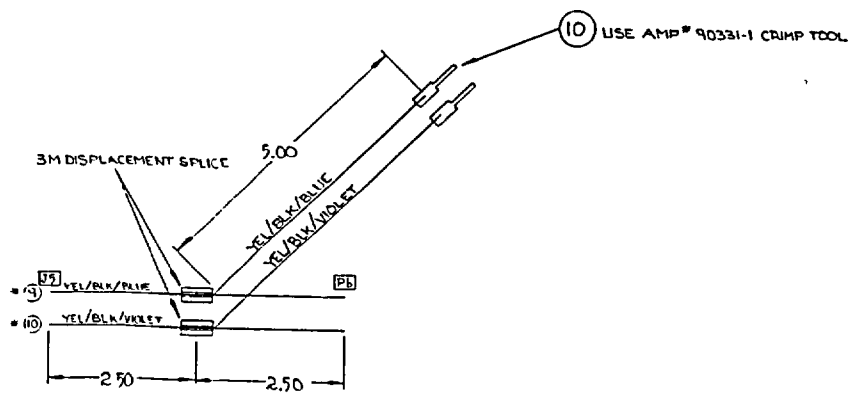

WIRE LIST		
FROM	TO	
J5	P6	COLOR CODE
J5 - 3	P6 - 8	YEL/VIOLET
- 4	- 7	YEL/WHITE
- 5	- 4	YEL/BLK/BROWN
- 6	- 3	YEL/BLK/RED
- 7	- 2	YEL/BLK/ORANGE
- 8	- 1	YEL/BLK/GREEN
- 9	- 6	YEL/BLK/BLUE
- 10	- 5	YEL/BLK/VIOLET

PARTS LIST LAST GENERAL REVIEW
BY BMP DATE 1-4-88

REV	DESCRIPTION	DWN/DATE	CHK/DATE	ENG/DATE	APP/DATE	QA/DATE
B1	REV PCR 9CR5 90	3/6/90			N/A	
B	REVISED PER 9CR5-87	10-29-87	1-4-88	1-5-88	1-5-88	1/4/88

THIS DRAWING IS THE PROPERTY OF VICTOREEN, INCORPORATED AND THIS THE DRAWING, NOR REPRODUCTIONS OF IT, NOR INFORMATION REVEALED THEREIN TO BE GIVEN TO OTHERS SHALL BE TO BE MADE OF IT WHICH IS OR MAY BE PREJUDICIAL TO VICTOREEN, INCORPORATED.

TOLERANCES UNLESS OTHERWISE SPECIFIED

OPTIONAL TOLERANCES IF SPECIFIED

VICTOREEN, INC.
10101 Woodland Ave., Cleveland, Oh. 44104
A Sheller-Globe Corporation Subsidiary

DRAWING TITLE: MAIN PCB / ANALOG OUTS TO REAR PANEL P2 HARNESS

SIZE D — 942A-100-35C — REV B1

SHEET 1 OF 1 — SCALE 1:1

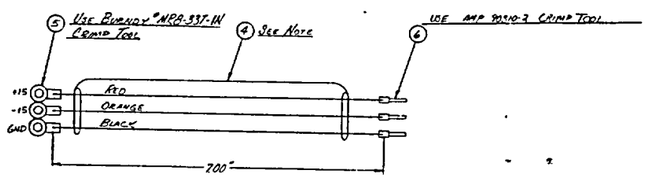

PARTS LIST LAST GENERAL REVIEW
BY MHP DATE 5-1-85

ITEM	REQD	DWG SIZE	PART NO.	NAME
6	3		67-85-88	Female Amp Pin
5	3	-	34-86	Ring Lugs
4	6"	-	SM-2202	Spiral Wrap
3	7"	-	MSB-0071-2	#18 AWG-Black
2	7"		MSB-0071-9	#18 AWG-Orange
1	7"	-	MSB-0071-3	#18 AWG-Red

THIRD ANGLE PROJECTION

SUPERSEDES DRAWING

THIS DRAWING IS THE PROPERTY OF VICTOREEN, INCORPORATED. NEITHER THIS DRAWING, NOR REPRODUCTION OF IT, NOR INFORMATION OR DATA IN IT TO BE MADE TO OTHERS OR USE IS TO BE MADE TO OTHERS WITHOUT WRITTEN PERMISSION OF VICTOREEN, INCORPORATED.

UNLESS OTHERWISE SPECIFIED DIMENSIONS ARE IN INCHES. TOLERANCES ON DECIMALS ARE ±0.005 ON ANGLES ±1/2° ON FRACTIONS ±1/64 ON DIAMETERS ±0.005 ON DRILL SIZE ±0.005 ON MACHINE FINISH 125 RMS

NEXT ASSY: USED ON

APPLICATION

VICTOREEN, INC.

PART NO. 1-[illegible]
NAME Detector Assembly Pt Number
MATERIAL
FINISH
SIZE D1
DWG NO. 942-100-35D
SCALE NONE
SHEET 1 OF 1

REV	DESCRIPTION	BY	DATE
B	REV PER ECO [illegible]	[illegible]	[illegible]
B	ECO 11CR8-286	[illegible]	[illegible]
A	ORIGINAL ISSUE	[illegible]	[illegible]

NOTE: INSTALL SPIRAL WRAP (ITEM 4) AROUND WIRE BUNDLE TO COMPLETE ASSY

942-100-35E 1 C

C	REVISED PER DCR 10CR10-94	10-14-94	

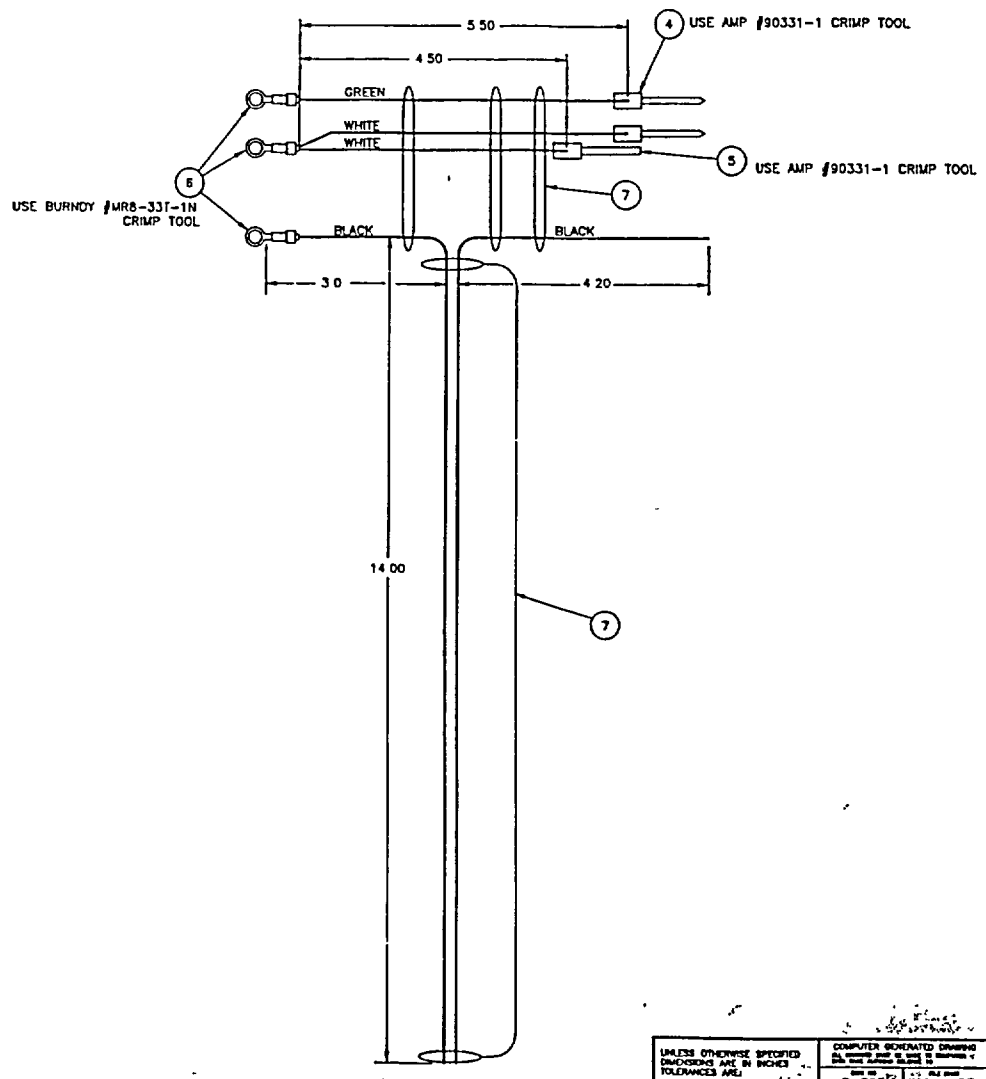

UNLESS OTHERWISE SPECIFIED DIMENSIONS ARE IN INCHES TOLERANCES ARE:
DECIMALS ANGLES FINISH
.XX=±.015 ±1 DEG 125
.XXX=±.005 ±
REMOVE ALL BURRS & BREAK SHARP EDGES .005 TO .015

COMPUTER GENERATED DRAWING
DWG NO S-3239 REV 2100-35E
MATERIAL
FINISH

NEXT ASSEMBLY USED ON
DRAWN bh 5-23-94
ENGR ARA 11-17-94
MFG RDC 11-18-94
APPROVED N/A
QA 2/23/95

VICTOREEN, INC.
6000 COCHRAN RD., SOLON, OHIO 44139

TITLE
AC HARNESS

D 63060 942-100-35E C

SCALE FULL DO NOT SCALE SHEET 1 OF 1

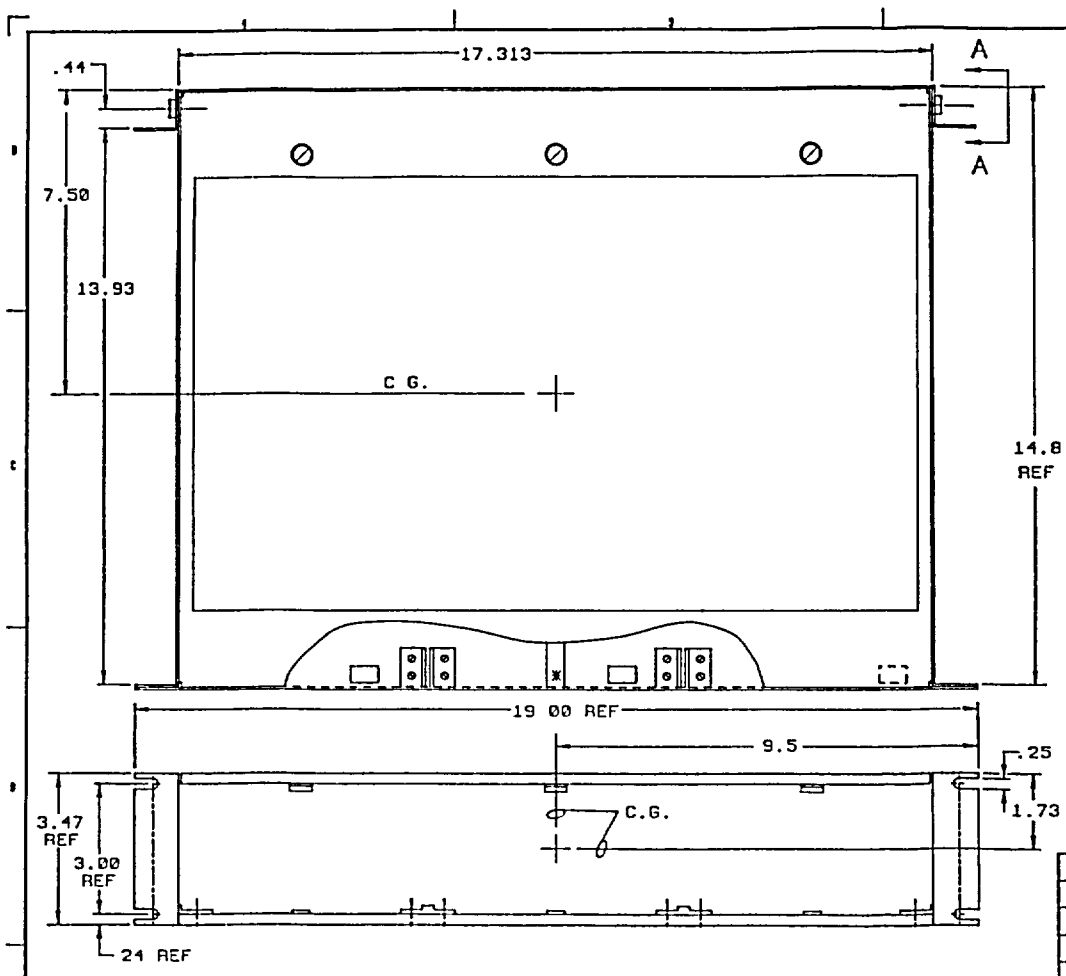

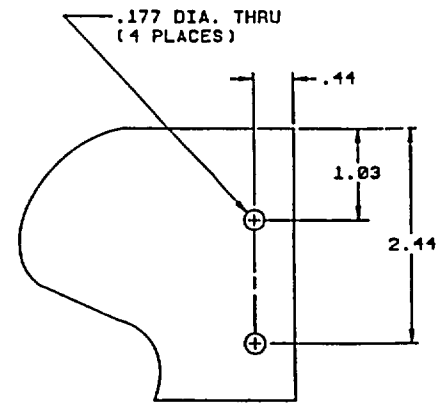

VIEW A–A - MTG. EAR REMOVED
(ROTATED 90°CW)
(SEE NOTE 2)

NOTES:

1.) SUGGESTED REAR SUPPORT-ATTACH EIA STRIP TO REAR MTG. EARS AND SECURE USING #10 HARDWARE

2.) ALTERNATE REAR SUPPORT-REMOVES REAR MTG. EARS AND STRAP CHASSIS TOGETHER USING DETAIL A DIMENSIONS AND #8 HARDWARE

3.) APPROXIMATE WEIGHT-10#

4.) FINISH-ZINC PLATED PER ASTM B633-85 W/CLEAR CHROMATE DIP

5.) CONSTRUCTION-16 GAUGE C.R.S.

STANDARD DISK #161 FILE 948-1

REV.	DESCRIPTION	DRW/DATE	CHK/DATE	ENG/DATE	APP/DATE	QA/DATE
D	REVISED PER DCR 9CR33-90	WT 9-17-90	N/A	DGS 10-19-90	N/A	[illegible]
C	REV PER ECO 7CR62-90	TF 7-24-90	ARA 7-24-90	DEE 7-25-90	AWL 7/23/90	JAS 7/23/90
B	REV PER ECO 6CR47-90	KEW 6-28-90	TB 6-28-90	ARA 6-28-90	AWL 6/28/90	JAS 6/28/90
A	ORIGINAL ISSUE 9CR60-89	BH 10-6-89	ARA 10-25-89	JH 10-31-89	AWL 11-2-89	JAS 11-2-89

THIS DRAWING IS THE PROPERTY OF VICTOREEN, INCORPORATED, NEITHER THE DRAWING, NOR REPRODUCTIONS OF IT, NOR INFORMATION DERIVED FROM IT, IS TO BE GIVEN TO OTHERS, NO USE IS TO BE MADE OF IT WHICH IS OR MAY BE INJURIOUS TO VICTOREEN, INCORPORATED

SUPERCEDES:

VICTOREEN, INC.
6000 COCHRAN RD., SOLON, OHIO 44139

TOLERANCES UNLESS OTHERWISE SPECIFIED: .X .5; .XX .015; .XXX .005; 125; ANGLES +/-1 DEGREE

OPTIONAL TOLERANCES IF SPECIFIED: DEGREE

INIT. APPLICATION:

DRAWING TITLE: DIMENSIONAL OUTLINE 3 BAY CHASSIS

SIZE	DRAWING NUMBER	REV.
C	GEL 948-1	D

SHEET 1 OF 1 SCALE 1/2

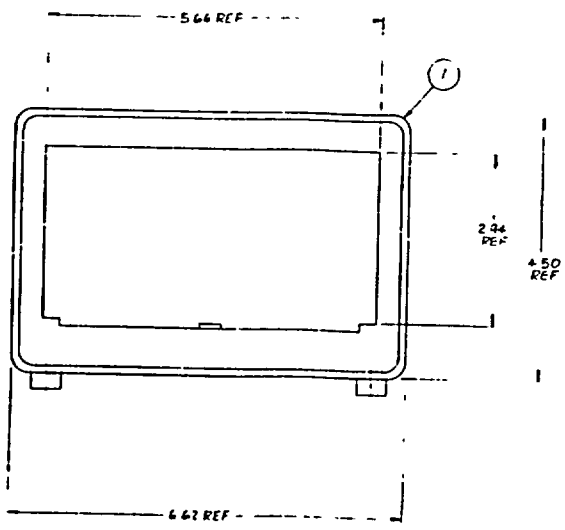

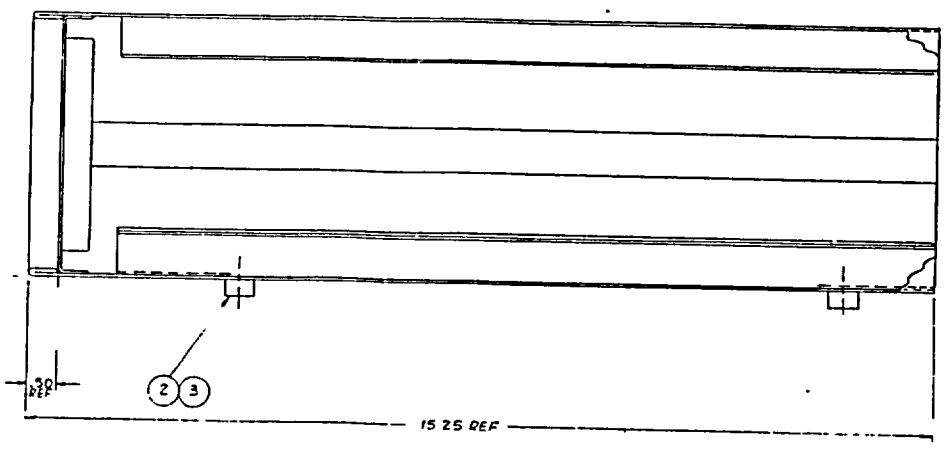

ITEM	REQD	DWG SIZE	PART NO.	NAME
3	4		5-192	4-40 x .38 RD. HD. SCR.
2	4		70-106	RUBBER FOOT
1	1	D	948-3-6	CABINET

THIRD ANGLE PROJECTION

SUPERSEDES DRAWING

THIS DRAWING IS THE PROPERTY OF VICTOREEN INCORPORATED. NEITHER THE DRAWING, NOR REPRODUCTION OF IT, NOR INFORMATION DERIVED FROM IT, IS TO BE GIVEN TO OTHERS, NOR IS TO BE MADE OF IT WHICH IS, OR MAY BE DELEGIOUS TO VICTOREEN INCORPORATED.

UNLESS OTHERWISE SPECIFIED
DIMENSIONS ARE IN INCHES
ANGLES ± 1°
MACHINED FINISH 125 OR BETTER
CHAMFER ANGLE 45° ± 5° OR BETTER
CHAMFER LENGTH 0.25 ± .01
DIMENSIONS ENCLOSED IN ( ) ARE MORE CRITICAL THAN APPLICABLE INDUSTRY STANDARDS. INFORM VICTOREEN IF YOU NOTICE THIS

NEXT ASSY | USED ON
APPLICATION

VICTOREEN, INC.
DIVISION OF SHELLER-GLOBE CORP

PART NO. | NAME: SINGLE CHANNEL CABINET ASSEMBLY
MATERIAL | FINISH

SIZE D | DWG NO. 948-3-5 | REV B
SCALE: FULL | SHEET 1 OF 1

REV	DESCRIPTION	DR	DATE	CK	DATE	ENGR	DATE	APP	DATE
B	REV PER ECO 221		8-2-85						
A	ORIGINAL ISSUE								

PARTS LIST LAST GENERAL REVIEW
BY MMP DATE 5 13 85

948-9-5 (TAB) 1 E1

E1	REV PER DCR BCR33-93	6 22-93	M HOLT

NOTES

1. 4 BRACKETS FOR MOUNTING 2 TOP AND 2 BOTTOM
2. SCREWS MUST BE FLUSH WITH THE INSIDE SURFACE OF THE TOP OF MOUNTING ADAPTOR PROTRUSION INTO THE HOUSING IS NOT PERMITTED
3. DISTANCE FROM TOP OF SLIDE SURFACE TO INSIDE TOP OF ADAPTER MUST BE 2.935 -0.000, +0.015 SLIDES MUST BE FLAT, SMOOTH AND PARALLEL WITH THE INSIDE TOP OF THE ENCLOSURE

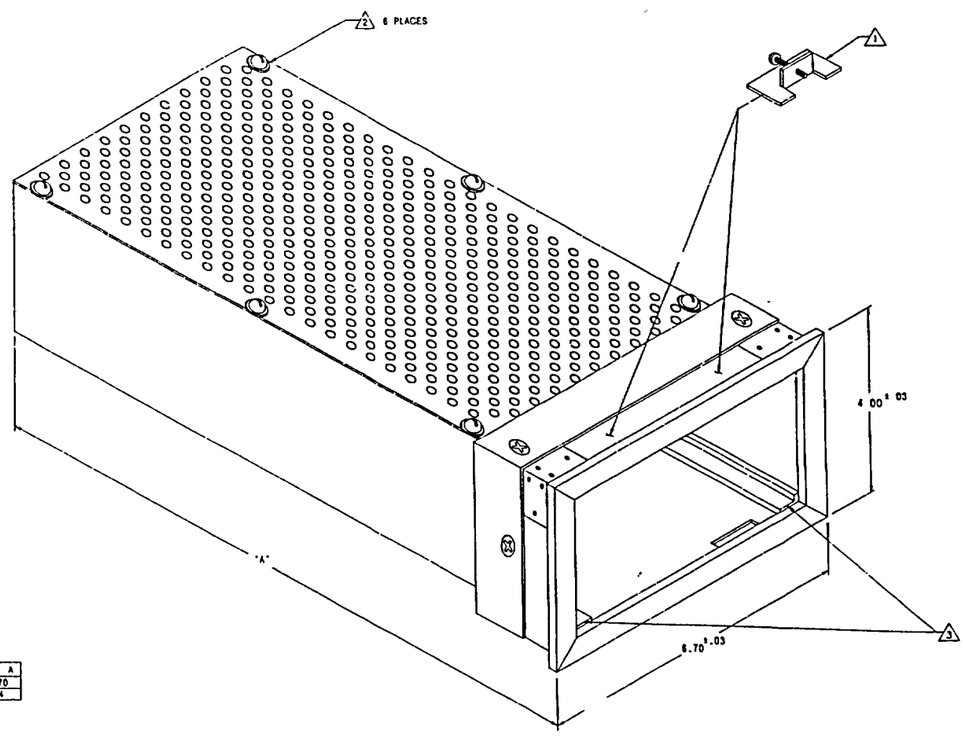

PART NO	DIM A
948-9-5	13.70
948-9-5A	8.14

UNLESS OTHERWISE SPECIFIED DIMENSIONS ARE IN INCHES TOLERANCES ARE:
DECIMALS ANGLES FINISH
.XX=±.015 ±1°
.XXX=±.005 ±
REMOVE ALL BURRS & BREAK SHARP EDGES .005 TO .015

COMPUTER GENERATED DRAWING
DWG. NO. STD-241 FILE NAME 5-TAB
MATERIAL
FINISH

NEXT ASSEMBLY USED ON

DRAWN	WT	5/1/92
CHECKED	WT	6.25.92
PROJ ENG	DGB	7/2/93
APPROVED	N/A	
QA	N/A	7/2/93

VICTOREEN, INC.
6000 COCHRAN RD, SOLON, OHIO 44139

TITLE
PANEL MOUNTING ADAPTER

SIZE D | CODE IDENT NO 63060 | DWG NO 948-9-5 (TAB) | REV E1
SCALE 1:1 | DO NOT SCALE | SHEET 1 OF 1

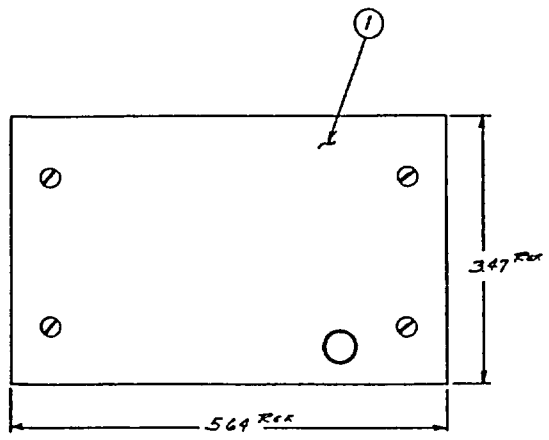

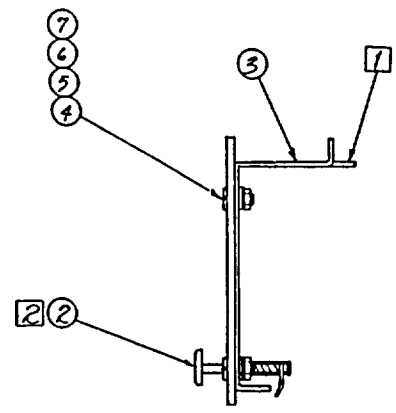

NOTES:
[2] MOUNT PAWL FASTENER (ITEM 2) SO LATCH STOPS TURNING IN POSITION SHOWN
[1] STRAIGHTEN INNER TABS 90° AS SHOWN ON BOTH BRACKETS (ITEM 3)

PARTS LIST LAST GENERAL REVIEW:
BY MMP DATE 1-22-87

REV	DESCRIPTION	DWN/DATE	CHK/DATE	ENG/DATE	APP/DATE	QA/DATE
A	ORIG ISSUE PER EWR-86	LB 12-8-86	MP 1/1/87	RB 1-9-87	VRL 2/11/87	BWM 6/13/87

THIS DRAWING IS THE PROPERTY OF VICTOREEN, INCORPORATED. NEITHER THE DRAWING, NOR REPRODUCTIONS OF IT, NOR INFORMATION DERIVED FROM IT TO BE GIVEN TO OTHERS, NOR USE IT TO BE MADE OF IT WHICH IS, OR MAY BE, INJURIOUS TO VICTOREEN, INCORPORATED.

TOLERANCES UNLESS OTHERWISE SPECIFIED: .X ±.1, .XX ±.05, .XXX ±.010, ANGLES ±1 DEGREE
OPTIONAL TOLERANCES IF SPECIFIED: ——, ——, ——, ✓, ✓

DIST APPLICATION

VICTOREEN, INC.
10101 Woodland Ave., Cleveland, Oh. 44104
A Shelter-Globe Corporation Subsidiary

DRAWING TITLE: ASSY, BLANK FRONT PANEL

SIZE C | DRAWING NUMBER 948A-2-5 | REV A | SHEET 1 OF 1 | SCALE 1:1

GEL-948-10 | 1 | B

B	REVISED PER DCR 10CR40-97	11-18-97	MT

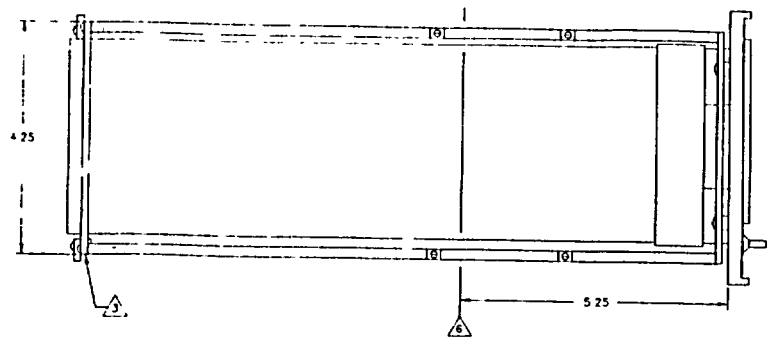

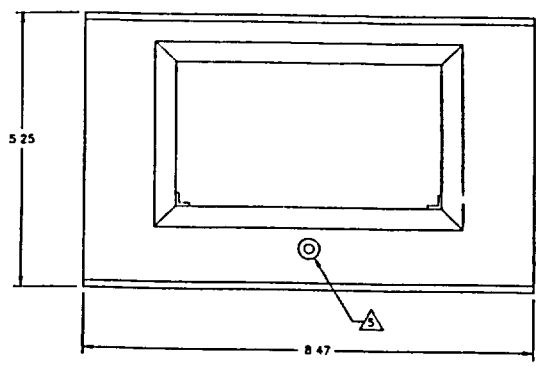

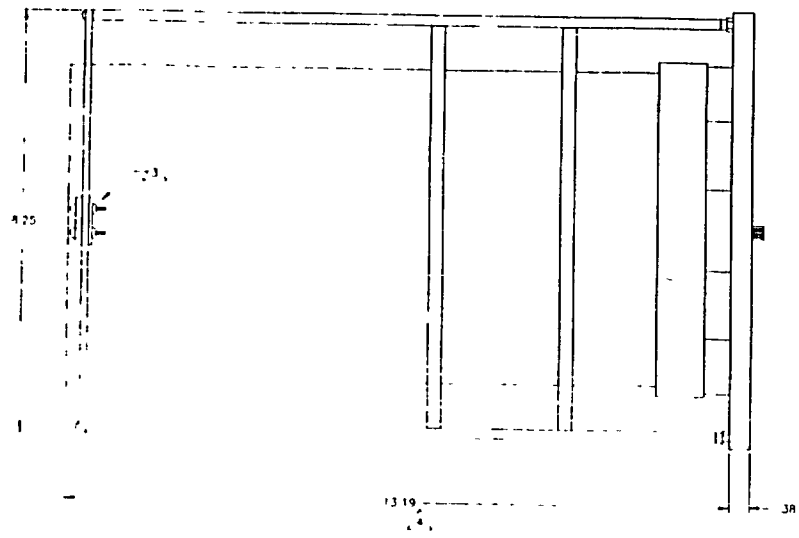

NOTES

1. THIS ASSEMBLY ADAPTS THE UDR TO MOUNT IN THE 844-7 AND 876-1-55 RACK CHASSIS
2. WEIGHT 5 LBS 11 OZ
3. ADJUST UPPER AND LOWER NYLON GUIDES FOR SNUG FIT IN RACK CHASSIS ADAPTER IS TO BE INSTALLED IN
4. INSERT DEPTH INTO RACK CHASSIS
5. TIGHTEN PAWL FASTENER AFTER INSTALLATION INTO RACK CHASSIS
6. CENTER OF GRAVITY - EMPTY

UNLESS OTHERWISE SPECIFIED DIMENSIONS ARE IN INCHES TOLERANCES ARE
DECIMALS .XX=± .015 .XXX=± .005 ANGLES ±1 DEG FINISH 125
REMOVE ALL BURRS & BREAK SHARP EDGES .005 TO .015

COMPUTER GENERATED DRAWING
DWG NO STD-404 FILE NAME 948-10
MATERIAL
FINISH

NEXT ASSEMBLY USED ON
18 1-07-86
ARA 11-18-97
N/A

VICTOREEN, INC.
6000 COCHRAN RD., SOLON, OHIO 44139

TITLE GENERAL ARRANGEMENT ADAPTER UDR/RACK CHASSIS

SIZE D | 63060 | DWG NO GEL-948-10 | REV B

SCALE NONE | DO NOT SCALE | SHEET 1 OF

SPECIFICATION
10 CONDUCTOR CABLE

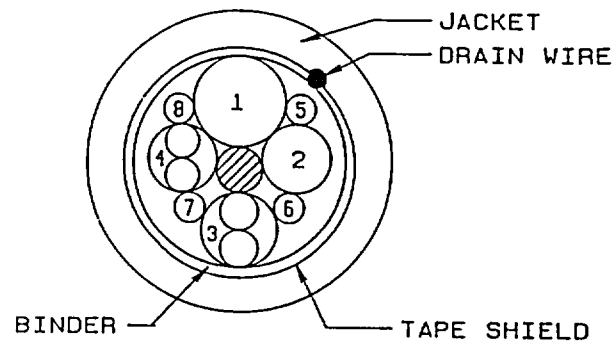

CONSTRUCTION:

2 Coaxial Cables:	1-RG58 C/U Type	1-RG59 B/U Type
a. Conductor:	#21 AWG 19/.0071 T/C	Solid .023" Copper covered steel 40% Conductivity
b. Insulation:	Irradiation Crosslinked Polyethylene .116" ± .004"	Irradiation Crosslinked Polyethylene .146" ± .004"
c. Shield:	#36 AWG T/C 90% Min. Cov. .150" Max.	#34 AWG B/C 90% Min. Cov. .191" Max.
d. Jacket:	Irradiation Crosslinked Polyolefin .195" ± .004"	Irradiation Crosslinked Polyolefin .242" ± .004"
e. Impedance:	50 ± 2 ohms	75 ± 3 ohms
f. Capacitance:	32 pf/ft. Nom.	21 pf/ft. Nom.

2 Pair: #18 AWG 7/.0152" stranded tinned copper insulated with a .030" nominal wall of irradiated crosslinked polyolefin

Nom O.D. .106"

Pair twisted with a 3.0" max. lay. Nom O.D .212" (Major Axis)

4 Singles: #18 AWG 7/.0152" stranded tinned copper insulated with a .030" nominal wall of irradiated crosslinked polyolefin

Nom. O.D. .106"

Conductor Identification.

Coaxial cables printed RG58 C/U Type and RG59 B/U Type on jacket:

1. RG59 B/U Type
2. RG58 C/U Type

Pairs:

3. Pair #1 Black / White
4. Pair #2 Red / Green

Single conductors:

5 Orange
6 Blue
7. White/Black
8. Red/Black

Filler Material: Flame retardant foam polypropylene as required

Cabling: As per cross-sectional diagram with a 9.0" maximum lay.

Nom. O.D. .533"

Binder: .002" mylar wrap. Nom. O.D. .541"

SUGGESTED VENDORS:
FL SURPRENANT WIRE & CABLE
BOSTON INSULATED WIRE & CABLE

REV	DESCRIPTION	DWN/DATE	CHK/DATE	ENG/DATE	APP/DATE	QA/DATE
D	REDRAWN & REV PER ECO 2CR12-89	CTP 2-27-89	MAP 3-15-89	3 22-89	DCG 3-22-89	3/30/89

THIS DRAWING IS THE PROPERTY OF VICTOREEN, INCORPORATED NEITHER THE DRAWING, NOR REPRODUCTIONS OF IT, NOR INFORMATION DERIVED FROM IT, IS TO BE GIVEN TO OTHERS, NO USE IS TO BE MADE OF IT WHICH IS, OR MAY BE INJURIOUS TO VICTOREEN, INCORPORATED

TOLERANCES UNLESS OTHERWISE SPECIFIED: X .5; .XX .03; .XXX .015; 125; ANGLES +/-1 DEGREE

OPTIONAL TOLERANCES IF SPECIFIED: DEGREE

INIT APPLICATION:

SUPERCEDES:

VICTOREEN, INC.
6800 COCHRAN RD., SOLON, OH. 44139-3395

DRAWING TITLE: CABLE, DETECTOR 10/CONDUCTOR

SIZE	DRAWING NUMBER	REV.
B	50-100-TAB	D

SHEET 1 OF 2 SCALE

SPECIFICATION (CONTINUED)

Drain Wire: #20 AWG 7/.0121" stranded tinned copper spiraled around cable and in contact with aluminum mylar tape shield.

Tape Shield: Aluminum mylar tape wrap with aluminum side facing in. Nom. O D. .547"

Jacket: .060" Nominal wall of hypalon per IPCEA S-19-81.

Finished O.D : .667" ± 025"

Test Requirements

Inspection Test Voltage:

RG59 B/U Type:	5000 V RMS
RG58 C/U Type:	3500 V RMS
#18 AWG Condrs :	2500 V RMS

Flame Test: Cable IEEE 383 70,000 BTU ribbon burner.

10/C Detector Cable

DESCRIPTION.

I. Coaxial Components:

	RG 58/U alt.	RG 59/u alt.
A. Conductors	19/.0071" T.C.	19/36 T.C.
B. Insulation	Crosslinked Polyethylene	Crosslinked Polyethylene
C. Flame Tape	Mica tape	Mica tape
D. Diameter under shield	.119"	.115"
E. Shield	#36 AWG 92% Coverage	#36 AWG 92% Coverage
F. Insulation wrap	.001" Mylar	.001" Mylar
G. Jacket type	Bostrad 7 (CSPE)	Bostrad 7 (CSPE)
H. Thickness, nom.	015"	015"
J. O.D., nom.	.181"	.217"
K. Impedance, nom.	50 Ohms	75 Ohms
L. Capacitance, nom.	32 pf/ft.	21 pf/ft.
M.Dielectric Strength(min)	5.0 KVAC for 1 min	7.0 KVAC for 1 min.

II. Instrument Components:

A. Conductors	8x #18 AWG, 7/.0152" T C.
B. Insulation (Each Cond)	.020" Ethylene propylene rubber per IPCEA S-68-516 Interim #1
C. Insulation Covering (Each Conductor)	.010" Bostrad 7 (CSPE) per IPCEA S-19-81
D. Voltage Rating	300V

DESCRIPTION (CONTINUED)

III. Cable Assembly:

A. Sub-assembly	Twist 2 pairs #18 AWG
B. Final Assembly	Cable 2 coaxes, 2 twisted pairs, and 4 x #18 AWG leads around a glass filler core
C. Binder Tape	Flame retardant grade
D. Overall Shield	Aluminum/mylar tape with #20 AWG stranded T.C. drain wire
E. Overall Jacket	.060" Bostrad 7(CSPE)per IPCEA S-19-81
F. Outside Diameter, nom.	.675" + .015 − .035

TAB	OUTER JACKET (SOLID OR STRIPED)
50-100	BLACK
50-100-1	RED
50-100-2	GREEN

REV.	DESCRIPTION	DWN/DATE	CHK/DATE	ENG/DATE	APP/DATE	QA/DATE
D	REDRAWN & REV PER ECO 2CR12-89	CTP 2-27-89	MMP 3-13-89	3-13-89	DCB 3-14-89	3/24/89

THIS DRAWING IS THE PROPERTY OF VICTOREEN, INCORPORATED NEITHER THE DRAWING, NOR REPRODUCTIONS OF IT, NOR INFORMATION DERIVED FROM IT, IS TO BE GIVEN TO OTHERS. NO USE IS TO BE MADE OF IT WHICH IS, OR MAY BE INJURIOUS TO VICTOREEN, INCORPORATED

SUPERCEDES

VICTOREEN, INC.
6888 COCHRAN RD ,SOLON,OH.44139-3395

TOLERANCES UNLESS OTHERWISE SPECIFIED: X .5; XX 03; XXX 015; ANGLES 125 +/-1 DEGREE

OPTIONAL TOLERANCES IF SPECIFIED: DEGREE

DRAWING TITLE: CABLE, DETECTOR 10/CONDUCTOR

SIZE	DRAWING NUMBER	REV.
B	50-100-TAB	D

SHEET 2 OF 2 SCALE

INIT APPLICATION

848-8-105

LTR	ECO NO.	APPROVED	DATE
A	2004	Original Signed By	6/5/91

NOTES
1

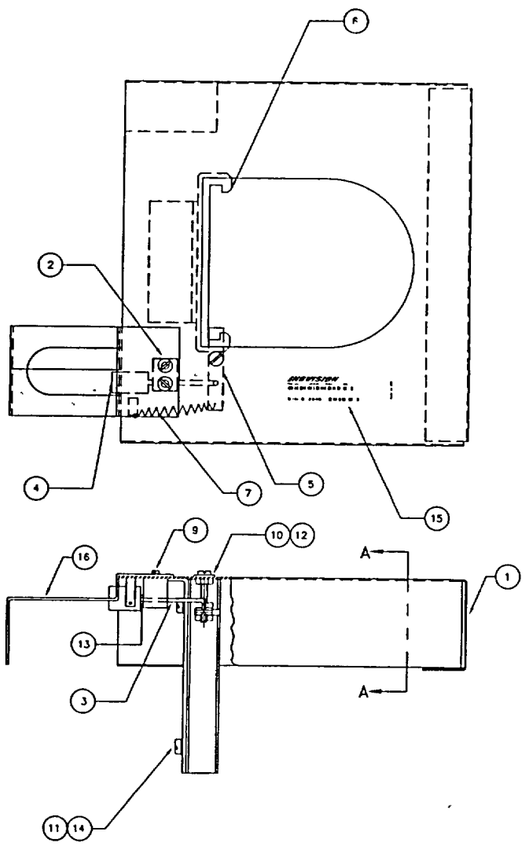

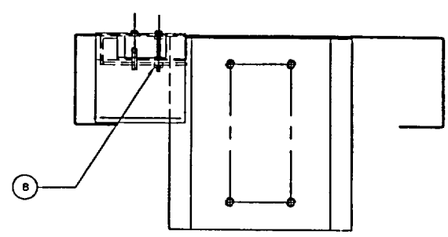

SECTION A–A

UNLESS OTHERWISE SPECIFIED DIMENSIONS ARE IN INCHES
TOLERANCES ARE:
DECIMALS .XX±.015 .XXX±.005
ANGLES ±1° FINISH: 63
FRACTIONS: ±1/32
REMOVE ALL BURRS & BREAK SHARP EDGES .005 TO .015

DRAWN BY	Original Signed By	02/01/91
ENGINEERING	Original Signed By	6/5/91
DESIGN	Original Signed By	6/5/91
MFG	Original Signed By	6/5/91

INOVISION RADIATION MEASUREMENTS 8045 EDGEWAY ROAD BOLDIN, OHIO 44130

TITLE
ASSEMBLY
FIELD CALIBRATION ADAPTER

SIZE	CODE IDENT NO.	DWG NO.	REV
D	1JZH3	848-8-105	4

SCALE 1/1 DO NOT SCALE SHEET 1 OF 1

848-8-400

ITEM	PART NO	QUAN.	DESCRIPTION
1	848-8-4002	1	ADAPTER W/SS. FLANGE
2	848-8-3072	1	GUIDE
3	5-497	2	SCREW F.H. 1/4-20 3/4 LG

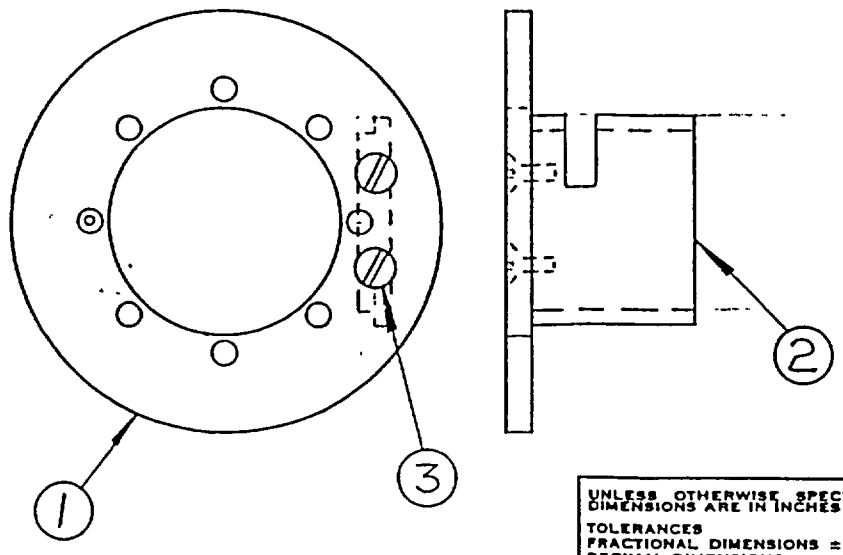

② MILL TEST CERTIFICATE W/ HEAT NO. REQ'D

① C OF C REQUIRED W/SHIPMENT

NOTES: UNLESS OTHERWISE SPECIFIED

UNLESS OTHERWISE SPECIFIED DIMENSIONS ARE IN INCHES
TOLERANCES
FRACTIONAL DIMENSIONS ± .015
DECIMAL DIMENSIONS:
.XX = ± .015 – .XXX = ± 005
ANGLES
ALL OTHER TOLERANCES PER VICTOREEN DWG NO 901775

E 207017

NEXT ASS'Y | USED ON

APPLICATION

REVISIONS:

REV LET	DESCRIPTION	DATE
A	RELEASED FOR PRODUCTION ECO 15212	6/30/82

NUCLEAR
Q.A. REVIEWED REV. # A
7-1-82

VICTOREEN, INC.
10101 WOODLAND AVE., CLEVELAND, OHIO 44104

NAME ADAPTER W/ S.S. FLANGE ASS'Y.

MATERIAL	FINISH
SS	SS

DRAWN	DATE	CHECKED	DATE	APP'D	DATE
EAS	6/24/82				6/30/82

SIZE	CODE IDENT.	DWG. NO.
A	63060	848-8-400

SCALE 1/2 | SHEET 1 OF 1

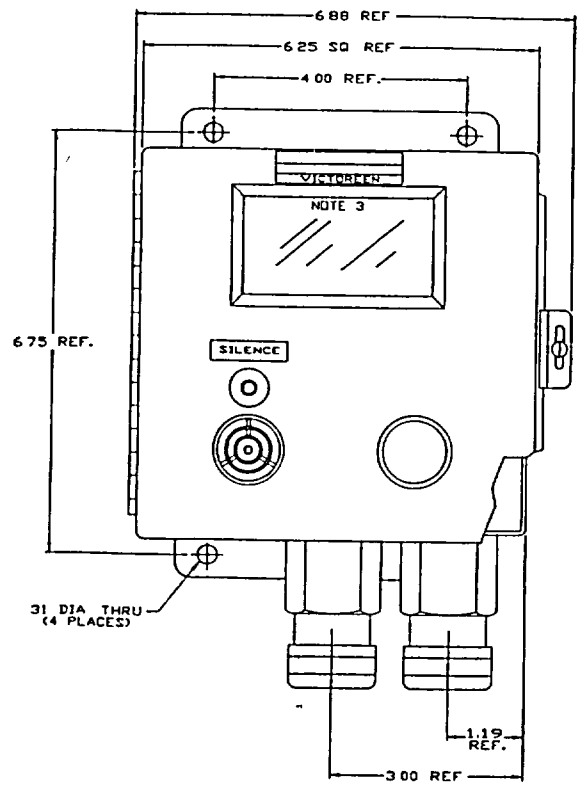

FRONT VIEW

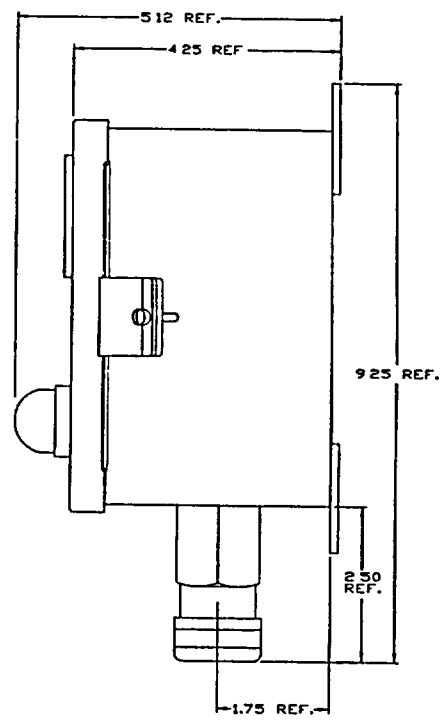

RIGHT SIDE VIEW

NOTES:

1) APPLIES TO MODELS 958A-10, 1L 20, 2L 30, 3L 40, 41
2) APPROXIMATE WEIGHT: 4 lbs
3) MODEL 958A-40 FURNISHED WITHOUT METER ASSEMBLY
4) MODELS 958A-1L 2L 3L AND 4L HAVE STAINLESS STEEL ENCLOSURES AND PANELS.
5) CENTER OF GRAVITY IS PHYSICAL CENTER +/- 1".
6) ANALOG INPUT SIGNAL FOR ALL UNITS (NOT REQ'D ON MODELS 40, 41) IS 0-10 VOLTS.
7) RANGE: MODEL 958A-10, 1L (0.01 TO 10^3 mR/h)
MODEL 958A-20, 2L (0.1 TO 10^4 mR/h)
MODEL 958A-30, 3L (1 TO 10^5 mR/h)

REV.	DESCRIPTION	DWN/DATE	CHK/DATE	ENG/DATE	APP/DATE	QA/DATE
C	REV PER DCR 7CR27-94	8-11-94	8-17-94	8/19/94	N/A	8/19/94

THIS DRAWING IS THE PROPERTY OF VICTOREEN INCORPORATED NEITHER THE DRAWING, NOR ITS REPRODUCTION OR ITS INFORMATION SHALL BE GIVEN TO OTHERS OR USED TO BE MADE OF IT WHICH IS OR MAY BE HARMFUL TO VICTOREEN, INCORPORATED

SUPERCEDES:

VICTOREEN, INC.
6864 COCHRAN RD., SOLON, OHIO 44139

TOLERANCES UNLESS OTHERWISE SPECIFIED: .X ±.06; .XX ±.015; .XXX ±.005; ∠ ±2.5°; ANGLES ±1-1 DEGREE

OPTIONAL TOLERANCES IF SPECIFIED: ✓ DEGREE

DRAWING TITLE: DIMENSIONAL OUTLINE REMOTE ALARM

SIZE	DRAWING NUMBER	REV
D	GEL-958A	C

SHEET 1 OF 1 SCALE FULL

ORIGINATOR: MH DATE: 10-8-91
FILENAME: GEL-958A DWG: 8-217

Appendix C. - Bill of Materials

Part Number	Description
897A-210	Bill of Materials, Detector Assembly, Low Range
897A-220	Bill of Materials, Detector Assembly, Medium Range
897A-230	Bill of Materials, Detector Assembly, High Range
897A-210-5A	Bill of Materials, Detector Main Assembly, Low Range
897A-220-5A	Bill of Materials, Detector Main Assembly, Medium Range
897A-230-5A	Bill of Materials, Detector Main Assembly, High Range
843-6-26	Bill of Materials, Wall Support, Detector
897A-211-30	Bill of Materials, Check Source MTG Assembly
857-210-30	Bill of Materials, Check Source Assembly
897A-210-10	Bill of Materials, PC Board Assembly
857-210-20	Bill of Materials, Tube Assy, Low Range
857-220-20	Bill of Materials, Tube Assy, Medium Range
857-230-20	Bill of Materials, Tube Assy, High Range
897A-211	Bill of Materials, Stainless Steel Detector Assy, Low
897A-221	Bill of Materials, Stainless Steel Detector Assy, Medium
897A-231	Bill of Materials, Stainless Steel Detector Assy, High
897A-211-5	Bill of Materials, Stainless Steel Detector Main Assy, Low
897A-221-5	Bill of Materials, Stainless Steel Detector Main Assy, Medium
897A-231-5	Bill of Materials, Stainless Steel Detector Main Assy, High
857-211-20	Bill of Materials, Tube Assy, Low Range
857-221-20	Bill of Materials, Tube Assy, Medium Range
857-231-20	Bill of Materials, Tube Assy, High Range
956A-201	Bill of Materials, Readout Assembly
956A-201-5	Bill of Materials, Assembly, Digital Readout
956A-100-20	Bill of Materials, Assembly, Front Panel
956-100-15	Bill of Materials, Assembly, Front Panel PC Board
942A-100-30	Bill of Materials, Assembly, Rear Panel
956A-201-55	Bill of Materials, Assembly, Power Supply
942A-100-70A	Bill of Materials, Harness Assembly
942-100-70	Bill of Materials, Assembly, Relay PC Board
956-200-10	Bill of Materials, Main PC Board Assembly
942-200-60	Bill of Materials, Assembly, High Voltage Board
942-100-35A	Bill of Materials, Harness, Power Supply
942-100-35B	Bill of Materials, Harness, Main PC Board to Relay Board
942A-100-35C	Bill of Materials, Harness, Analog output
942-100-35D	Bill of Materials, Harness, Detector Power Supply
942-100-35E	Bill of Materials, Harness, AC Power
948-1	Bill of Materials, 3-Bay Chassis
948A-2-5	Bill of Materials, Blank Panel Assembly
948-10	Bill of Materials, Panel Adapter, Dimensional Outline

15:48:25 300 VICTOREEN, INC. PAGE 1
TODAY: 5/29/96
RT: 897A-210

COMPONENT BILL OF MATERIAL
DESC: DETECTOR,AREA MON.,GM,ALUM,LOW REV: C
ECN: 4CR3-96

ITEM NBR.	PART NUMBER	DESCRIPTION	QUANTITY		ECN
0	897A-210-5A	DET. MAIN ASSY,AL.HOUS.LOW RNG LOC:	1.000	EA	BM 9CR28-95
0	GEL897A-2X0	DETECTOR, DIMENSIONAL OUTLINE LOC:	.001	EA	9CR28-95
0	CAL-GM6	897A GM DET. CALIBRATION PROC. LOC:	.001	EA	9CR28-95
0	92-7005-9A	CLAMP LOC:	1.000	EA	9CR28-95
0	92-7005-12A	BUSHING LOC:	1.000	EA	9CR28-95
0	92-7005-17A	CONNECTOR, FEMALE LOC:	1.000	EA	4CR3-96
0	843-6-26	WALL SUPPORT, DETECTOR LOC:	1.000	EA	BM 9CR28-95
0	MB95-1008	MAINTENANCE BULLETIN LOC:	.001	EA	9CR28-95

TODAY: 5/29/96
RT: 897A-220

COMPONENT BILL OF MATERIAL
DESC: DETECTOR,AREA MON.,GM,ALUM,MED REV: C
ECN: 4CR3-96

ITEM NBR.	PART NUMBER	DESCRIPTION	QUANTITY		ECN
0	897A-220-5A	DET. MAIN ASSY,AL.HOUS.MED RNG LOC:	1.000	EA	BM 9CR28-95
0	GEL897A-2X0	DETECTOR, DIMENSIONAL OUTLINE LOC:	.001	EA	9CR28-95
0	CAL-GM6	897A GM DET. CALIBRATION PROC. LOC:	.001	EA	9CR28-95
0	92-7005-9A	CLAMP LOC:	1.000	EA	9CR28-95
0	92-7005-12A	BUSHING LOC:	1.000	EA	9CR28-95
0	92-7005-17A	CONNECTOR, FEMALE LOC:	1.000	EA	4CR3-96
0	843-6-26	WALL SUPPORT, DETECTOR LOC:	1.000	EA	BM 9CR28-95
0	MB95-1008	MAINTENANCE BULLETIN LOC:	.001	EA	9CR28-95

15:51:39 300 VICTOREEN, INC. PAGE 1
TODAY: 5/29/96 COMPONENT BILL OF MATERIAL
RT: 897A-230 DESC: DETECTOR,AREA MON,GM.ALUM.HIGH REV: C
ECN: 4CR3-96

ITEM NBR.	PART NUMBER	DESCRIPTION	QUANTITY		ECN
0	897A-230-5A	DET. MAIN ASSY,AL.HOUS. HI RNG LOC:	1.000	EA	BM 9CR28-95
0	GEL897A-2X0	DETECTOR. DIMENSIONAL OUTLINE LOC:	.001	EA	9CR28-95
0	CAL-GM6	897A GM DET. CALIBRATION PROC. LOC:	.001	EA	9CR28-95
0	92-7005-9A	CLAMP LOC:	1.000	EA	9CR28-95
0	92-7005-12A	BUSHING LOC:	1.000	EA	9CR28-95
0	92-7005-17A	CONNECTOR. FEMALE LOC:	1.000	EA	4CR3-96
0	843-6-26	WALL SUPPORT. DETECTOR LOC:	1.000	EA	BM 9CR28-95
0	MB95-1008	MAINTENANCE BULLETIN LOC:	.001	EA	9CR28-95

Product Structure

Product No: 897A-210-5A DET. MAIN ASSY,AL.HOUS.LOW RNG
Rev: 003 ECN: 1958
Drawing Number: PER TAB

Item No.	Product Number	DrawingNo.	Siz	Description	Quantity			ECN	Rev	Obs	Act
	TP897A			TEST PROCEDURE	.000	EA		1590	1	N	Y
1	857-210-18	857-210-18		HOUSING PROCESSED	1.000	EA	PS	12CR1-98	2	N	Y
2	857-10-25			COVER PLATE PROCESSED (SA)	1.000	EA	PS	2CR7-99	2	N	Y
3	897A-211-30			CHECK SOURCE MTG. ASSEMBLY	1.000	EA	PS	4CR8-96	2	N	Y
4	897A-210-10	PER DWG	B	ASSEMBLY DETECTOR PC BOARD	1.000	EA	PS	1795	3	N	Y
5	857-210-20	857-210-20	B	TUBE & SHIELD ASSEMBLY LOW	1.000	EA	PS	1629	6	N	Y
6	857-1-18			HOUSING INSULATOR PAD	1.000	EA		1590		N	Y
7	857-10-22			SCREW,SEEL,PH 6-32 SLOT .50 SS	4.000	EA		1590		N	Y
8	MSB-0072-2			WIRE, HOOK-UP, 22 AWG, BLACK	.001	FT		1590	5	N	Y
9	46-77			O-RING, 3.489ID,.07 THK	1.000	EA		1590	3	N	Y
10	200-135	200-135	B	NAME TAG	1.000	EA	PS	1840	6	N	Y
11	92-7005-20A	PER PRINT	D	CONNECTOR, 12 PIN, MALE	1.000	EA		1587	8	N	Y
12	897-110-28	897-110-28	A	MOUNTING BLOCK	2.000	EA		1950	1	N	Y
13	36-3			TERM, LUG, SOLDER, LOCK EYELET	1.000	EA		1590		N	Y
14	5-837			WASHER, SPLIT, 6, SS	14.000	EA		1590		N	Y
15	5-288			SCREW, MACH, PH, 6-32 X .62,	6.000	EA		1590		N	Y
16	5-280			SCREW, MACH, PH, 6-32 X .50,	4.000	EA		1590		N	Y
17	5-838			WASHER, FLAT, 6, SS	4.000	EA		1590		N	Y
18	5-853			NUT, HEX, 6-32, SS	4.000	EA		1590		N	Y
19	5-1011			SCREW, SEEL, PH, 4-40 X .31	2.000	EA		1590		N	Y
21	MSA-0007			SOLDER, CORE, 60/40, .031 DIA	.001	LB		1303	2	N	Y
22	897A-210-13	PER PRINT	D	SCHEMATIC DIAGRAM, DETECTOR	.001	EA		1712	2	N	Y
23	857-10-7			GASKET, 2.0 SQ X .031 THK	1.000	EA		1590	2	N	Y
24	MSJ-4372			CEMENT, CONTACT, FASTBOND 10	.001	EA		1590		N	Y
27	MSH-6227			TUBING, 1/8, BLACK	.001	FT		1590	1	N	Y
28	40-164			SPACER, .12, .14ID/.25OD, RND	2.000	EA		1590	1	N	Y
29	MSB-0072-16			WIRE, HOOK-UP, 22 AWG, WHT/GRN	.001	FT		1590	5	N	Y
30	MSB-0072-3			WIRE, HOOK-UP, 22 AWG, RED	.001	FT		1590	5	N	Y
31	MSB-0072-15			WIRE, HOOK-UP, 22 AWG, WHT/RED	.001	FT		1590	5	N	Y
32	MSB-0072-4			WIRE, HOOK-UP, 22 AWG, GREEN	.001	FT		1590	5	N	Y
33	MSB-0069			WIRE, HV, LEAD WIRE, 22, 10K V	.001	FT		1200		N	Y
34	200-122	200-122	A	"WIPE TEST" LABEL	.001	EA		1599	2	N	Y
35	200-53			LABEL,CAUTION	.001	EA		1590		N	Y
36	5-712			WASHER, FLAT, 6, NY, NAT	8.000	EA		1590		N	Y
37	5-852			NUT, HEX, 6-32, SS, SM	2.000	EA		1590		N	Y

*** END OF REPORT ***

Product Structure

Product No: 897A-220-5A DET. MAIN ASSY,AL.HOUS.MED RNG
Rev: 003 ECN: 1958
Drawing Number: PER TAB

Item No.	Product Number	DrawingNo.	Siz	Description	Quantity			ECN	Rev	Obs	Act
	TP897A			TEST PROCEDURE	.000	EA		1590	1	N	Y
1	857-210-18	857-210-18		HOUSING PROCESSED	1.000	EA	PS	12CR1-98	2	N	Y
2	857-10-25			COVER PLATE PROCESSED (SA)	1.000	EA	PS	2CR7-99	2	N	Y
3	897A-211-30			CHECK SOURCE MTG. ASSEMBLY	1.000	EA	PS	4CR8-96	2	N	Y
4	897A-210-10	PER DWG	B	ASSEMBLY DETECTOR PC BOARD	1.000	EA	PS	1795	3	N	Y
5	857-220-20	857-220-20	B	TUBE ASSEMBLY, MED RANGE	1.000	EA	PS	1958	5	N	Y
6	857-1-18			HOUSING INSULATOR PAD	1.000	EA		1590		N	Y
7	857-10-22			SCREW,SEEL,PH 6-32 SLOT .50 SS	4.000	EA		1590		N	Y
8	MSB-0072-2			WIRE, HOOK-UP, 22 AWG, BLACK	.001	FT		1590	5	N	Y
9	46-77			O-RING, 3.489ID,.07 THK	1.000	EA		1590	3	N	Y
10	200-135	200-135	B	NAME TAG	1.000	EA	PS	1840	6	N	Y
11	92-7005-20A	PER PRINT	D	CONNECTOR, 12 PIN, MALE	1.000	EA		1587	8	N	Y
12	897-110-28	897-110-28	A	MOUNTING BLOCK	2.000	EA		1950	1	N	Y
13	36-3			TERM, LUG, SOLDER, LOCK EYELET	1.000	EA		1590		N	Y
14	5-837			WASHER, SPLIT, 6, SS	14.000	EA		1590		N	Y
15	5-288			SCREW, MACH, PH, 6-32 X .62,	6.000	EA		1590		N	Y
16	5-280			SCREW, MACH, PH, 6-32 X .50,	4.000	EA		1590		N	Y
17	5-838			WASHER, FLAT, 6, SS	4.000	EA		1590		N	Y
18	5-853			NUT, HEX, 6-32, SS	4.000	EA		1590		N	Y
19	5-1011			SCREW, SEEL, PH, 4-40 X .31	2.000	EA		1590		N	Y
21	MSA-0007			SOLDER, CORE, 60/40, .031 DIA	.001	LB		1303	2	N	Y
22	897A-210-13	PER PRINT	D	SCHEMATIC DIAGRAM, DETECTOR	.001	EA		1712	2	N	Y
23	857-10-7			GASKET, 2.0 SQ X .031 THK	1.000	EA		1590	2	N	Y
24	MSJ-4372			CEMENT, CONTACT, FASTBOND 10	.001	EA		1590		N	Y
27	MSH-6227			TUBING, 1/8, BLACK	.001	FT		1590	1	N	Y
28	40-164			SPACER, .12, .14ID/.25OD, RND	2.000	EA		1590	1	N	Y
29	MSB-0072-16			WIRE, HOOK-UP, 22 AWG, WHT/GRN	.001	FT		1590	5	N	Y
30	MSB-0072-3			WIRE, HOOK-UP, 22 AWG, RED	.001	FT		1590	5	N	Y
31	MSB-0072-15			WIRE, HOOK-UP, 22 AWG, WHT/RED	.001	FT		1590	5	N	Y
32	MSB-0072-4			WIRE, HOOK-UP, 22 AWG, GREEN	.001	FT		1590	5	N	Y
33	MSB-0069			WIRE, HV, LEAD WIRE, 22, 10K V	.001	FT		1200		N	Y
34	200-122	200-122	A	"WIPE TEST" LABEL	.001	EA		1599	2	N	Y
35	200-53			LABEL,CAUTION	.001	EA		1590		N	Y
36	5-712			WASHER, FLAT, 6, NY, NAT	8.000	EA		1590		N	Y
37	5-852			NUT, HEX, 6-32, SS, SM	2.000	EA		1590		N	Y

*** END OF REPORT ***

Product Structure

Product No: 897A-230-5A DET. MAIN ASSY,AL.HOUS. HI RNG
Rev: 003 ECN: 1958
Drawing Number: PER TAB

Item No.	Product Number	DrawingNo.	Siz	Description	Quantity			ECN	Rev	Obs	Act
	TP897A			TEST PROCEDURE	.000	EA		1590	1	N	Y
1	857-210-18	857-210-18		HOUSING PROCESSED	1.000	EA	PS	12CR1-98	2	N	Y
2	857-10-25			COVER PLATE PROCESSED (SA)	1.000	EA	PS	2CR7-99	2	N	Y
3	897A-211-30			CHECK SOURCE MTG. ASSEMBLY	1.000	EA	PS	4CR8-96	2	N	Y
4	897A-210-10	PER DWG	B	ASSEMBLY DETECTOR PC BOARD	1.000	EA	PS	1795	3	N	Y
5	857-230-20			TUBE ASSEMBLY, HIGH RANGE	1.000	EA	PS	2CR7-99	7	N	Y
6	857-1-18			HOUSING INSULATOR PAD	1.000	EA		1590		N	Y
7	857-10-22			SCREW,SEEL,PH 6-32 SLOT .50 SS	4.000	EA		1590		N	Y
8	MSB-0072-2			WIRE, HOOK-UP, 22 AWG, BLACK	.001	FT		1590	5	N	Y
9	46-77			O-RING, 3.489ID,.07 THK	1.000	EA		1590	3	N	Y
10	200-135	200-135	B	NAME TAG	1.000	EA	PS	1840	6	N	Y
11	92-7005-20A	PER PRINT	D	CONNECTOR, 12 PIN, MALE	1.000	EA		1587	8	N	Y
12	897-110-28	897-110-28	A	MOUNTING BLOCK	2.000	EA		1950	1	N	Y
13	36-3			TERM, LUG, SOLDER, LOCK EYELET	1.000	EA		1590		N	Y
14	5-837			WASHER, SPLIT, 6, SS	14.000	EA		1590		N	Y
15	5-288			SCREW, MACH, PH, 6-32 X .62,	6.000	EA		1590		N	Y
16	5-280			SCREW, MACH, PH, 6-32 X .50,	4.000	EA		1590		N	Y
17	5-838			WASHER, FLAT, 6, SS	4.000	EA		1590		N	Y
18	5-853			NUT, HEX, 6-32, SS	4.000	EA		1590		N	Y
19	5-1011			SCREW, SEEL, PH, 4-40 X .31	2.000	EA		1590		N	Y
21	MSA-0007			SOLDER, CORE, 60/40, .031 DIA	.001	LB		1303	2	N	Y
22	897A-210-13	PER PRINT	D	SCHEMATIC DIAGRAM, DETECTOR	.000	EA		1712	2	N	Y
23	857-10-7			GASKET, 2.0 SQ X .031 THK	1.000	EA		1590	2	N	Y
24	MSJ-4372			CEMENT, CONTACT, FASTBOND 10	.001	EA		1590		N	Y
27	MSH-6227			TUBING, 1/8, BLACK	.001	FT		1590	1	N	Y
28	40-164			SPACER, .12, .14ID/.25OD, RND	2.000	EA		1590	1	N	Y
29	MSB-0072-16			WIRE, HOOK-UP, 22 AWG, WHT/GRN	.001	FT		1590	5	N	Y
30	MSB-0072-3			WIRE, HOOK-UP, 22 AWG, RED	.001	FT		1590	5	N	Y
31	MSB-0072-15			WIRE, HOOK-UP, 22 AWG, WHT/RED	.001	FT		1590	5	N	Y
32	MSB-0072-4			WIRE, HOOK-UP, 22 AWG, GREEN	.001	FT		1590	5	N	Y
33	MSB-0069			WIRE, HV, LEAD WIRE, 22, 10K V	.001	FT		1200		N	Y
34	200-122	200-122	A	"WIPE TEST" LABEL	.001	EA		1599	2	N	Y
35	200-53			LABEL,CAUTION	.001	EA		1590		N	Y
36	5-712			WASHER, FLAT, 6, NY, NAT	8.000	EA		1590		N	Y
37	5-852			NUT, HEX, 6-32, SS, SM	2.000	EA		1590		N	Y

*** END OF REPORT ***

15:55:56 300 VICTOREEN, INC. PAGE 1

TODAY: 5/29/96 COMPONENT BILL OF MATERIAL

RT: 843-6-26 DESC: WALL SUPPORT, DETECTOR REV: B

ECN: 4CR29-95

ITEM NBR.	PART NUMBER	DESCRIPTION	QUANTITY	ECN
1	5-920	SCREW, SET, CP, .25-20 X .38 LOC:	2.000 EA	4CR29-95
2	77-3	PIN, SPRING, .25 DIA, .5 LONG LOC:	2.000 EA	4CR29-95

15:56:06 300 VICTOREEN, INC. PAGE 1
TODAY: 5/29/96 COMPONENT BILL OF MATERIAL
RT: 897A-211-30 DESC: CHECK SOURCE MTG. ASSEMBLY REV: B
ECN: 4CR8-96

ITEM NBR.	PART NUMBER	DESCRIPTION	QUANTITY		ECN
1	897A-211-41	BRACKET,MOUNTING,CHECK SOURCE LOC:	1.000	EA	2CR12-95
2	857-210-30	ASSEMBLY, CHECK SOURCE LOC:	1.000	EA	BM 2CR12-95
3	897A-211-18	INSULATOR,CHK SOURCE MTG ASS'Y LOC:	1.000	EA	2CR12-95
4	897A-211-19	INSULATOR.CHK SOURCE MTG ASS'Y LOC:	1.000	EA	2CR12-95
5	5-685	SCREW, MACH. RH, 4-40 X .75 LOC:	2.000	EA	2CR12-95
6	5-850	NUT. HEX. 4-40. SS. SM LOC:	2.000	EA	2CR12-95
7	5-846	WASHER. INT. 4. SS LOC:	2.000	EA	2CR12-95
8	40-134	SPACER. .25. .14ID/.250D. RND LOC:	2.000	EA	4CR8-96
9	5-711	WASHER. FLAT, 4. NY, NAT LOC:	2.000	EA	2CR12-95

15:56:15 300
TODAY: 5/29/96
PT: 857-210-30

VICTOREEN, INC.
COMPONENT BILL OF MATERIAL
DESC: ASSEMBLY. CHECK SOURCE

REV: B
ECN: 4CR18-92

ITEM NBR.	PART NUMBER	DESCRIPTION	QUANTITY		ECN
0	TP857-210-30	ASSEMBLY. TEST PROCEDURE LOC:	1.000	EA	4CR18-92
1	857-210-32	SOURCE DISC ASSY(SA)-8UCI-36CL LOC:	1.000	EA	BM 4CR18-92
2	92-7026-A	METER MOVEMENT, 0-1MA LOC:	1.000	EA	4CR18-92
3	MSA-0004	SOLDER, LOW TEMP. .062 DIA LOC:	.001	LB	4CR18-92
4	MSM-1104	FLUX. SOLDER, PASTE LOC:	.001	LB	4CR18-92
5	MSB-0115-3	WIRE, STRAND. 28 AWG, RED. TFE LOC:	.001	FT	4CR18-92
6	MSB-0119-6	WIRE. STRAND, 24 GA. LT BLUE LOC:	.001	FT	4CR18-92
7	200-53	LABEL.CAUTION LOC:	1.000	EA	4CR18-92
8	200-122	LABEL.WIPE TEST LOC:	1.000	EA	4CR18-92

Product Structure

Product No: 897A-210-10 ASSEMBLY DETECTOR PC BOARD
Rev: 003 ECN: 1795
Drawing Number: PER DWG

Item No.	Product Number	DrawingNo.	Siz	Description	Quantity	ECN	Rev	Obs	Act
	92-1010-722A			RESISTOR, 2.2M, .5W, 5% CARBON	1.000 EA	1590	1	N	Y
		Loc: R17							
	185-486	NONE	PN	RESISTOR, 39.2, 1W, 1%, METAL	1.000 EA	1495	1	N	Y
		Loc: R27							
	21-1103			CAPACITOR, 100 UF, 25V	1.000 EA	1590		N	Y
		Loc: C1							
	21-2051			CAPACITOR, .01 UF, 3KV	1.000 EA	1590	1	N	Y
		Loc: C9							
	21-209			CAPACITOR, .001 UF, 3000V	1.000 EA	1590		N	Y
		Loc: C10							
	52-209			DIODE, ZENER, 1N823A, 6.2V	1.000 EA	1590		N	Y
		Loc: CR11							
	92-1000-410A			RESISTOR, 1K, .25W, 2%,MF	3.000 EA	9CR26-99	5	N	Y
		Loc: R11,R35,R45							
	92-1000-439A			RESISTOR, 3.9K, .25W, 2%	2.000 EA	9CR26-99	5	N	Y
		Loc: R7,R10							
	92-1000-443A			RESISTOR, 4.3K, .25W, 2%, MF	2.000 EA	9CR26-99	5	N	Y
		Loc: R3, R6							
	92-1000-447A			RESISTOR, 4.7K, .25W, 2%,MF	4.000 EA	9CR26-99	5	N	Y
		Loc: R24,R28,R33,R36							
	92-1000-475A			RESISTOR, 7.5K, .25W, 2%	2.000 EA	9CR26-99	5	N	Y
		Loc: R4,R5							
	92-1000-510A			RESISTOR, 10K, .25W, 2%,MF	3.000 EA	9CR26-99	5	N	Y
		Loc: R14,R26,R43							
	92-1000-520A			RESISTOR, 20K, .25W, 2%,MF	3.000 EA	9CR26-99	5	N	Y
		Loc: R25,R38,R42							
	92-1000-530A			RESISTOR, 30K, .25W, 2%	2.000 EA	9CR26-99	5	N	Y
		Loc: R8,R9							
	92-1000-533A			RESISTOR, 33K, .25W, 2%,MF	1.000 EA	9CR26-99	5	N	Y
		Loc: R22							
	92-1000-551A			RESISTOR, 51K, .25W, 2%	2.000 EA	9CR26-99	5	N	Y
		Loc: R13,R23							

Product Structure

Product No: 897A-210-10 ASSEMBLY DETECTOR PC BOARD
Rev: 003 ECN: 1795
Drawing Number: PER DWG

Item No.	Product Number	DrawingNo.	Siz	Description	Quantity		ECN	Rev	Obs	Act
	92-1000-568A			RESISTOR, 68K, .25W, 2%,MF	1.000	EA	9CR26-99	5	N	Y
		Loc: R18								
	92-1000-610A			RESISTOR, 100K, .25W, 2%,MF	8.000	EA	9CR26-99	5	N	Y
		Loc: R16,R19-21,R29,R30,R37,R39								
	92-1000-622A			RESISTOR, 220K, .25W, 2%	1.000	EA	9CR26-99	5	N	Y
		Loc: R15								
	92-1000-810A			RESISTOR, 10M, .25W, 2%	3.000	EA	9CR26-99	5	N	Y
		Loc: R31,R32,R34								
	92-1010-410A			RESISTOR, 1K, .5W, 5%	3.000	EA	1590	1	N	Y
		Loc: R40,R46,R47								
	92-1063-49R9A			RESISTOR, 49.9, .5W, 1%, MFF	2.000	EA	1590	1	N	Y
		Loc: R1,R2								
	92-2002-10A	PER PRINT	B	POTENTIOMETER PCB MOUNT, 10	2.000	EA	1811	2	N	Y
		Loc: R41,R44								
	92-3000-14A			CAPACITOR,220 pf,50WVDC,5%	5.000	EA	1590	6	N	Y
		Loc: C3,C6-8,C13								
	92-3010-A			CAPACITOR, .1 UF, 20%	1.000	EA	1590	2	N	Y
		Loc: C11								
	92-3011-A			CAPACITOR, 6.8 UF,TANTALUM	3.000	EA	1590	3	N	Y
		Loc: C12,C14,C18								
	92-3017-A	NONE	PN	CAPACITOR, 1 UF, 50V	3.000	EA	1769	2	N	Y
		Loc: C15-17								
	92-4009-11A			I.C., 139J	1.000	EA	1590		N	Y
		Loc: Z1								
	92-5001-1B	TAB-DWG	C	TRANSISTOR	4.000	EA	1478	3	N	Y
		Loc: Q1,Q3-5								
	92-5001-2B	TAB-DWG	C	TRANSISTOR	1.000	EA	1478	3	N	Y
		Loc: Q2								
	92-6000-2A	92-6000-2A	B	DIODES	7.000	EA PS	1670	4	N	Y
		Loc: CR2,CR3,CR5-8,CR10								
	92-6008-A			DIODE, ZENER, 1N4465, 10V	1.000	EA	1590	1	N	Y
		Loc: CR9								

Product Structure

Product No: 897A-210-10 ASSEMBLY DETECTOR PC BOARD
Rev: 003 ECN: 1795
Drawing Number: PER DWG

Item No.	Product Number	DrawingNo.	Siz	Description	Quantity	ECN	Rev	Obs	Act
	92-9041-A			CONNECTOR, 36 PIN, HEADER, M	1.000 EA	1590	2	N	Y
		Loc: J1,J2,J3							
	92-1000-547A			RESISTOR, 47K, .25W, 2%,MF	1.000 EA	9CR26-99	5	N	Y
		Loc: R12							
	897A-210-13	PER PRINT	D	SCHEMATIC DIAGRAM, DETECTOR	.000 EA	1712	2	N	Y
	92-3000-7A			CAPACITOR, 20 PF, 300V	2.000 EA	1590	6	N	Y
		Loc: C4, C5							
	200-237			LABEL, MODEL & SERIAL NO.	1.000 EA	1590	1	N	Y
1	897-210-11			PROCESSED PCB, DETECTOR	1.000 EA	6CR50-87	6	N	Y
2	92-9042-A			JUMPER BLOCK	3.000 EA	1590	2	N	Y
		Loc: J1-A,B J2-A,B J3-A,B							
3	857-1-15			TUBE HOLDER	2.000 EA	1590		N	Y
4	37-21			EYELET,.085,BRASS,NICKEL PLATE	2.000 EA	1590	1	N	Y
5	MSB-0072-4			WIRE, HOOK-UP, 22 AWG, GREEN	.001 FT	1590	5	N	Y
6	MSB-0085			WIRE, SOLID, 22 AWG, BARE	.001 FT	1590	1	N	Y

*** END OF REPORT ***

15:56:37 300
TODAY: 5/29/96
RT: 857-210-20

VICTOREEN, INC.
COMPONENT BILL OF MATERIAL
DESC: TUBE ASSEMBLY, LOW RANGE

REV: E
ECN: 9CR28-95

ITEM NBR.	PART NUMBER	DESCRIPTION	QUANTITY	ECN
1	92-9163-A	GM TUBE,LOW RANGE, ZP1320 LOC:	1.000 EA	9CR28-95
2	857-1-16	SHIELD,LEAD LOC:	1.000 EA	9CR28-95
3	MSB-0115-3	WIRE, STRAND, 28 AWG, RED, TFE LOC:	.001 FT	9CR28-95
4	857-210-22B	TIN WRAP,LOW RANGE GM TUBE LOC:	1.000 EA	9CR28-95
5	MSB-0115-2	WIRE, STRAND, 28 AWG, BLK, TFE LOC:	.001 FT	9CR28-95

Product Structure

Product No: 857-220-20 TUBE ASSEMBLY, MED RANGE
Rev: 005 ECN: 1958
Drawing Number: 857-220-20

Item No.	Product Number	DrawingNo.	Siz	Description	Quantity			ECN	Rev	Obs	Act
1	857-2-10			CAP,TUBE CAPSULE,PROCESSED	1.000	EA	PS	12CR1-98	1	N	Y
2	857-2-17			TUBE CAPSULE	1.000	EA		1590		N	Y
3	92-9164-A			GM TUBE,MED RANGE, ZP1310	1.000	EA		1590	1	N	Y
4	857-2-8	857-2-8	A	LEAD SHIELD,MED RANGE	1.000	EA		1950	1	N	Y
5	857-2-19	857-2-19	A	FOAM PACKING	1.000	EA		1783		N	Y
6	MSB-0115-3			WIRE, STRAND, 28 AWG, RED, TFE	.001	FT		1590		N	Y
7	MSH-6216			TUBING, TEFLON #12	.001	FT		1590	1	N	Y
8	MSA-0007			SOLDER, CORE, 60/40, .031 DIA	.001	LB		1303	2	N	Y
9	MSJ-4372			CEMENT, CONTACT, FASTBOND 10	.001	EA		1590		N	Y
10	700-115			SOURCE, URANIUM FOIL, .007 THK	1.000	EA		1216	3	N	Y
11	OS-6061			TAPE, SCOTCH, 3/4" X 300" ROLL	.001	RL		1590		Y	Y
13	MSB-0115-2			WIRE, STRAND, 28 AWG, BLK, TFE	.001	FT		1590		N	Y

*** END OF REPORT ***

Product Structure

Product No: 857-230-20 TUBE ASSEMBLY, HIGH RANGE
Rev: 007 ECN: 2CR7-99
Drawing Number:

Item No.	Product Number	DrawingNo.	Siz	Description	Quantity			ECN	Rev	Obs	Act
1	92-9165-A			GM TUBE,HIGH RANGE, ZP1300	1.000	EA		1590	1	N	Y
2	857-2-17			TUBE CAPSULE	1.000	EA		1590		N	Y
3	857-2-10			CAP,TUBE CAPSULE,PROCESSED	1.000	EA	PS	12CR1-98	1	N	Y
4	857-3-11			FOAM PACKING	1.000	EA		1590		N	Y
5	857-3-8			SHIELD,LEAD	1.000	EA		1590	1	N	Y
6	MSB-0115-3			WIRE, STRAND, 28 AWG, RED, TFE	.001	FT		1590		N	Y
7	MSH-6216			TUBING, TEFLON #12	.001	FT		1590	1	N	Y
8	MSA-0007			SOLDER, CORE, 60/40, .031 DIA	.001	LB		1303	2	N	Y
9	MSJ-4372			CEMENT, CONTACT, FASTBOND 10	.001	EA		1590		N	Y
10	700-115			SOURCE, URANIUM FOIL, .007 THK	1.000	EA		1216	3	N	Y
11	857-2-22			SHIELD,LEAD END	1.000	EA		1590		N	Y
12	OS-6061			TAPE, SCOTCH, 3/4" X 300" ROLL	.001	RL		1590		Y	Y
13	MSB-0115-2			WIRE, STRAND, 28 AWG, BLK, TFE	.001	FT		1590		N	Y

*** END OF REPORT ***

15:51:54 300
TODAY: 5/29/96
RT: 897A-211

VICTOREEN, INC.
COMPONENT BILL OF MATERIAL
DESC: DETECTOR,AREA MON,GM,SS,LOW RA

REV: C
ECN: 4CR3-96

ITEM NBR.	PART NUMBER	DESCRIPTION	QUANTITY	ECN
0	897A-211-5	DET.MAIN ASSY,S.S.HOUS.LOW RNG LOC:	1.000 EA	BM 9CR28-95
0	GEL897A-2X1	DETECTOR. DIMENSIONAL OUTLINE LOC:	.001 EA	9CR28-95
0	CAL-GM6	897A GM DET. CALIBRATION PROC. LOC:	.001 EA	9CR28-95
0	857-211-18	BRACKET,DETECTOR MTG LOC:	1.000 EA	9CR28-95
0	857-211-19	MOUNTING STRAP LOC:	1.000 EA	9CR28-95
0	92-7005-15A	CONNECTOR. FEMALE LOC:	1.000 EA	9CR28-95
0	92-7005-12A	BUSHING LOC:	1.000 EA	4CR3-96
0	92-7005-13A	BUSHING LOC:	1.000 EA	4CR3-96
0	MB95-1008	MAINTENANCE BULLETIN LOC:	.001 EA	9CR28-95

TODAY: 5/29/96 COMPONENT BILL OF MATERIAL

RT: 897A-221 DESC: DETECTOR,AREA MON,GM,SS,MED RA REV: C

ECN: 4CR3-96

ITEM NBR.	PART NUMBER	DESCRIPTION	QUANTITY	ECN
0	897A-221-5	DET.MAIN ASSY,S.S.HOUS.MED RNG LOC:	1.000 EA	BM 9CR28-95
0	GEL897A-2X1	DETECTOR, DIMENSIONAL OUTLINE LOC:	.001 EA	9CR28-95
0	CAL-GM6	897A GM DET. CALIBRATION PROC. LOC:	.001 EA	9CR28-95
0	857-211-18	BRACKET,DETECTOR MTG LOC:	1.000 EA	9CR28-95
0	857-211-19	MOUNTING STRAP LOC:	1.000 EA	9CR28-95
0	92-7005-15A	CONNECTOR, FEMALE LOC:	1.000 EA	9CR28-95
0	92-7005-12A	BUSHING LOC:	1.000 EA	4CR3-96
0	92-7005-13A	BUSHING LOC:	1.000 EA	4CR3-96
0	MB95-1008	MAINTENANCE BULLETIN LOC:	.001 EA	9CR28-95

15:52:10 300
TODAY: 5/29/96
RT: 897A-231

VICTOREEN, INC.
COMPONENT BILL OF MATERIAL
DESC: DETECTOR,AREA MON.GM.SS,HIGH R

REV: C
ECN: 4CR3-96

ITEM NBR.	PART NUMBER	DESCRIPTION	QUANTITY		ECN
O	897A-231-5	DET.MAIN ASSY.S.S.HOUS.HI RNG LOC:	1.000	EA	BM 9CR28-95
O	GEL897A-2X1	DETECTOR, DIMENSIONAL OUTLINE LOC:	.001	EA	9CR28-95
O	CAL-GM6	897A GM DET. CALIBRATION PROC. LOC:	.001	EA	9CR28-95
O	857-211-18	BRACKET.DETECTOR MTG LOC:	1.000	EA	9CR28-95
O	857-211-19	MOUNTING STRAP LOC:	1.000	EA	9CR28-95
O	92-7005-15A	CONNECTOR, FEMALE LOC:	1.000	EA	9CR28-95
O	92-7005-12A	BUSHING LOC:	1.000	EA	4CR3-96
O	92-7005-13A	BUSHING LOC:	1.000	EA	4CR3-96
O	MB95-1008	MAINTENANCE BULLETIN LOC:	.001	EA	9CR28-95

TODAY: 5/29/96 COMPONENT BILL OF MATERIAL
PART: 897A-211-5 DESC: DET.MAIN ASSY,S.S.HOUS.LOW RNG REV: B
ECN: 9CR28-95

ITEM NBR.	PART NUMBER	DESCRIPTION	QUANTITY	ECN
16	5-280	SCREW, MACH, PH, 6-32 X .50, LOC:	12.000 EA	9CR28-95
17	5-837	WASHER, SPLIT, 6, SS LOC:	16.000 EA	9CR28-95
18	MSH-6221	TUBING, 1/8, BLACK LOC:	.001 FT	9CR28-95
19	MSB-0072-16	WIRE, HOOK-UP, 22 AWG, WHT/GRN LOC:	.001 FT	9CR28-95
20	MSB-0072-3	WIRE, HOOK-UP, 22 AWG, RED LOC:	.001 FT	9CR28-95
22	MSB-0072-4	WIRE, HOOK-UP, 22 AWG, GREEN LOC:	.001 FT	9CR28-95
23	MSA-0007	SOLDER, CORE, 60/40, .031 DIA LOC:	.001 LB	9CR28-95
24	897A-210-13	SCHEMATIC DIAGRAM, DETECTOR LOC:	.001 EA	9CR28-
25	5-852	NUT, HEX, 6-32, SS, SM LOC:	6.000 EA	9CR28-95
26	MSB-0072-2	WIRE, HOOK-UP, 22 AWG, BLACK LOC:	.001 FT	9CR28-95
27	5-853	NUT, HEX, 6-32, SS LOC:	4.000 EA	9CR28-95
28	MSB-0069	WIRE, HV, LEAD WIRE, 22, 10K V LOC:	.001 FT	9CR28-95
29	40-164	SPACER, .12, .14ID/.250D, RND LOC:	2.000 EA	9CR28-95
36	5-838	WASHER, FLAT, 6, SS LOC:	4.000 EA	9CR28-95
38	MSB-0072-15	WIRE, HOOK-UP, 22 AWG, WHT/RED LOC:	.001 FT	9CR28-95
39	5-712	WASHER, FLAT, 6, NY, NAT LOC:	6.000 EA	9CR28-95

TODAY: 5/29/96
COMPONENT BILL OF MATERIAL
PART: 897A-211-5
DESC: DET.MAIN ASSY,S.S.HOUS.LOW RNG REV: B
ECN: 9CR28-95

ITEM NBR.	PART NUMBER	DESCRIPTION	QUANTITY		ECN
0	GT3	TRAVELER FOR MECHANICAL ASSYS LOC:	1.000	EA	9CR28-95
0	TP897A	TEST PROCEDURE LOC:	.001	EA	9CR28-95
1	857-211-12	HOUSING WELDMENT (S.S.) LOC:	1.000	EA	9CR28-95
2	857-211-13	COVER PLATE LOC:	1.000	EA	9CR28-95
3	857-211-15	GASKET, COVER LOC:	1.000	EA	9CR28-95
4	857-211-14	GASKET,CONNECTOR LOC:	1.000	EA	9CR28-95
5	92-7005-14A	CONNECTOR, MALE LOC:	1.000	EA	9CR28-95
6	897-110-28	MOUNTING BLOCK LOC:	2.000	EA	9CR28-95
7	36-3	TERM. LUG, SOLDER, LOCK EYELET LOC:	1.000	EA	9CR28-95
8	897A-210-10	ASSEMBLY, PC BOARD LOC:	1.000	EA	BM 9CR28-95
9	200-135	NAME PLATE, UNIVERSAL LOC:	1.000	EA	9CR28-95
10	857-211-20	TUBE ASSEMBLY (LOW RANGE) LOC:	1.000	EA	BM 9CR28-95
11	897A-211-30	CHECK SOURCE MTG. ASSEMBLY LOC:	1.000	EA	BM 9CR28-95
12	857-211-16	ROD,THREADED 6-32 X 1.812 LG. LOC:	2.000	EA	9CR28-95
14	5-1011	SCREW, SEEL, PH, 4-40 X .31 LOC:	2.000	EA	9CR28-95
15	857-10-22	SCREW,SEEL,PH 6-32 SLOT .50 SS LOC:	4.000	EA	9CR28-95

TODAY: 5/29/96 COMPONENT BILL OF MATERIAL

RT: 897A-211-5 DESC: DET.MAIN ASSY,S.S.HOUS.LOW RNG REV: B

ECN: 9CR28-95

ITEM NBR.	PART NUMBER	DESCRIPTION	QUANTITY		ECN
43	200-122	LABEL,WIPE TEST LOC:	.001	EA	9CR28-95
44	200-53	LABEL,CAUTION LOC:	.001	EA	9CR28-95

Product Structure

Product No: 897A-221-5 DET.MAIN ASSY,S.S.HOUS.MED RNG
Rev: 002 ECN: 1958
Drawing Number: PER TAB

Item No.	Product Number	DrawingNo.	Siz	Description	Quantity			ECN	Rev	Obs	Act
	TP897A			TEST PROCEDURE	.000	EA		1590	1	N	Y
1	857-211-12			HOUSING WELDMENT (S.S.)	1.000	EA		1590	2	N	Y
2	857-211-13			COVER PLATE	1.000	EA		1590		N	Y
3	857-211-15			GASKET, COVER	1.000	EA		1590	3	N	Y
4	857-211-14			GASKET,CONNECTOR	1.000	EA		1590		N	Y
5	92-7005-14A	PER PRINT	D	CONNECTOR, MALE	1.000	EA		1587	8	N	Y
6	897-110-28	897-110-28	A	MOUNTING BLOCK	2.000	EA		1950	1	N	Y
7	36-3			TERM, LUG, SOLDER, LOCK EYELET	1.000	EA		1590		N	Y
8	897A-210-10	PER DWG	B	ASSEMBLY DETECTOR PC BOARD	1.000	EA	PS	1795	3	N	Y
9	200-135	200-135	B	NAME TAG	1.000	EA	PS	1840	6	N	Y
10	857-221-20			TUBE ASSEMBLY (MED.RANGE)	1.000	EA	PS	8CR58-93	5	N	Y
11	897A-211-30			CHECK SOURCE MTG. ASSEMBLY	1.000	EA	PS	4CR8-96	2	N	Y
12	857-211-16			ROD,THREADED 6-32 X 1.812 LG.	2.000	EA		1590	1	N	Y
14	5-1011			SCREW, SEEL, PH, 4-40 X .31	2.000	EA		1590		N	Y
15	857-10-22			SCREW,SEEL,PH 6-32 SLOT .50 SS	4.000	EA		1590		N	Y
16	5-280			SCREW, MACH, PH, 6-32 X .50,	12.000	EA		1590		N	Y
17	5-837			WASHER, SPLIT, 6, SS	16.000	EA		1590		N	Y
18	MSH-6227			TUBING, 1/8, BLACK	.001	FT		1590	1	N	Y
19	MSB-0072-16			WIRE, HOOK-UP, 22 AWG, WHT/GRN	.001	FT		1590	5	N	Y
20	MSB-0072-3			WIRE, HOOK-UP, 22 AWG, RED	.001	FT		1590	5	N	Y
22	MSB-0072-4			WIRE, HOOK-UP, 22 AWG, GREEN	.001	FT		1590	5	N	Y
23	MSA-0007			SOLDER, CORE, 60/40, .031 DIA	.001	LB		1303	2	N	Y
24	897A-210-13	PER PRINT	D	SCHEMATIC DIAGRAM, DETECTOR	.001	EA		1712	2	N	Y
25	5-852			NUT, HEX, 6-32, SS, SM	6.000	EA		1590		N	Y
26	MSB-0072-2			WIRE, HOOK-UP, 22 AWG, BLACK	.001	FT		1590	5	N	Y
27	5-853			NUT, HEX, 6-32, SS	4.000	EA		1590		N	Y
28	MSB-0069			WIRE, HV, LEAD WIRE, 22, 10K V	.001	FT		1200		N	Y
29	40-164			SPACER, .12, .14ID/.250D, RND	2.000	EA		1590	1	N	Y
36	5-838			WASHER, FLAT, 6, SS	4.000	EA		1590		N	Y
38	MSB-0072-15			WIRE, HOOK-UP, 22 AWG, WHT/RED	.001	FT		1590	5	N	Y
39	5-712			WASHER, FLAT, 6, NY, NAT	6.000	EA		1590		N	Y
43	200-122	200-122	A	"WIPE TEST" LABEL	.001	EA		1599	2	N	Y
44	200-53			LABEL,CAUTION	.001	EA		1590		N	Y

*** END OF REPORT ***

Product Structure

Product No: 897A-231-5 DET.MAIN ASSY,S.S.HOUS.HI RNG
Rev: 002 ECN: 1958
Drawing Number: 897A-TAB-5

Item No.	Product Number	DrawingNo.	Siz	Description	Quantity			ECN	Rev	Obs	Act
	TP897A			TEST PROCEDURE	.000	EA		1590	1	N	Y
1	857-211-12			HOUSING WELDMENT (S.S.)	1.000	EA		1590	2	N	Y
2	857-211-13			COVER PLATE	1.000	EA		1590		N	Y
3	857-211-15			GASKET, COVER	1.000	EA		1590	3	N	Y
4	857-211-14			GASKET,CONNECTOR	1.000	EA		1590		N	Y
5	92-7005-14A	PER PRINT	D	CONNECTOR, MALE	1.000	EA		1587	8	N	Y
6	897-110-28	897-110-28	A	MOUNTING BLOCK	2.000	EA		1950	1	N	Y
7	36-3			TERM, LUG, SOLDER, LOCK EYELET	1.000	EA		1590		N	Y
8	897A-210-10	PER DWG	B	ASSEMBLY DETECTOR PC BOARD	1.000	EA	PS	1795	3	N	Y
9	200-135	200-135	B	NAME TAG	1.000	EA	PS	1840	6	N	Y
10	857-231-20			TUBE ASSEMBLY, HIGH RANGE	1.000	EA	PS	8CR58-93	5	N	Y
11	897A-211-30			CHECK SOURCE MTG. ASSEMBLY	1.000	EA	PS	4CR8-96	2	N	Y
12	857-211-16			ROD,THREADED 6-32 X 1.812 LG.	2.000	EA		1590	1	N	Y
14	5-1011			SCREW, SEEL, PH, 4-40 X .31	2.000	EA		1590		N	Y
15	857-10-22			SCREW,SEEL,PH 6-32 SLOT .50 SS	4.000	EA		1590		N	Y
16	5-280			SCREW, MACH, PH, 6-32 X .50,	12.000	EA		1590		N	Y
17	5-837			WASHER, SPLIT, 6, SS	16.000	EA		1590		N	Y
18	MSH-6227			TUBING, 1/8, BLACK	.001	FT		1590	1	N	Y
19	MSB-0072-16			WIRE, HOOK-UP, 22 AWG, WHT/GRN	.001	FT		1590	5	N	Y
20	MSB-0072-3			WIRE, HOOK-UP, 22 AWG, RED	.001	FT		1590	5	N	Y
22	MSB-0072-4			WIRE, HOOK-UP, 22 AWG, GREEN	.001	FT		1590	5	N	Y
23	MSA-0007			SOLDER, CORE, 60/40, .031 DIA	.001	LB		1303	2	N	Y
24	897A-210-13	PER PRINT	D	SCHEMATIC DIAGRAM, DETECTOR	.001	EA		1712	2	N	Y
25	5-852			NUT, HEX, 6-32, SS, SM	6.000	EA		1590		N	Y
26	MSB-0072-2			WIRE, HOOK-UP, 22 AWG, BLACK	.001	FT		1590	5	N	Y
27	5-853			NUT, HEX, 6-32, SS	4.000	EA		1590		N	Y
28	MSB-0069			WIRE, HV, LEAD WIRE, 22, 10K V	.001	FT		1200		N	Y
29	40-164			SPACER, .12, .14ID/.25OD, RND	2.000	EA		1590	1	N	Y
36	5-838			WASHER, FLAT, 6, SS	4.000	EA		1590		N	Y
38	MSB-0072-15			WIRE, HOOK-UP, 22 AWG, WHT/RED	.001	FT		1590	5	N	Y
39	5-712			WASHER, FLAT, 6, NY, NAT	6.000	EA		1590		N	Y
43	200-122	200-122	A	"WIPE TEST" LABEL	.001	EA		1599	2	N	Y
44	200-53			LABEL,CAUTION	.001	EA		1590		N	Y

*** END OF REPORT ***

15:58:06 300 VICTOREEN, INC. PAGE 1

TODAY: 5/29/96 COMPONENT BILL OF MATERIAL

RT: 857-211-20 DESC: TUBE ASSEMBLY (LOW RANGE) REV: D1

ECN: 4CR1-92

ITEM NBR.	PART NUMBER	DESCRIPTION	QUANTITY	ECN
1	92-9163-A	GM TUBE,LOW RANGE, ZP1320 LOC:	1.000 EA	4CR1-92
2	857-1-16	SHIELD.LEAD LOC:	1.000 EA	5CR22-90
3	MSB-0093	WIRE, STRAND, 28, POLYUPETHANE LOC: 1.5LG	.001 FT	5CR22-90

15:58:17 300 VICTOREEN, INC. PAGE 1
TODAY: 5/29/96 COMPONENT BILL OF MATERIAL
PT: 857-221-20 DESC: TUBE ASSEMBLY (MED.RANGE) REV: E2
ECN: 8CR56-93

ITEM NBR.	PART NUMBER	DESCRIPTION	QUANTITY	ECN
1	857-2-10	CAP,TUBE CAPSULE,PROCESSED LOC:	1.000 EA	BM 5CR22-90
2	857-2-17	TUBE CAPSULE LOC:	1.000 EA	5CR22-90
3	92-9164-A	GM TUBE,MED RANGE, ZP1310 LOC:	1.000 EA	4CR1-92
4	857-2-8	LEAD SHIELD,MED RANGE LOC:	1.000 EA	5CR22-90
5	857-2-19	FOAM PACKING LOC:	1.000 EA	5CR22-90
6	MSB-0115-3	WIRE, STRAND, 28 AWG, RED, TFE LOC:	.001 FT	4CR18-92
7	MSH-6216	TUBING, TEFLON #12 LOC:	.001 FT	5CR22-90
8	MSA-0007	SOLDER, CORE, 60/40, .031 DIA LOC:	.001 LB	5CR22-90
9	MSJ-4372	CEMENT, CONTACT, FASTBOND 10 LOC:	.001 EA	5CR22-90
10	700-115	SOURCE, URANIUM FOIL, .007 THK LOC:	1.000 EA	8CR56-93
11	OS-6061	TAPE, SCOTCH, 3/4" X 300" ROLL LOC:	.001 RL	5CR22-90
13	MSB-0115-2	WIRE, STRAND, 28 AWG, BLK, TFE LOC:	.001 FT	4CR18-92

15:58:26 300 VICTOREEN, INC. PAGE 1
TODAY: 5/29/96 COMPONENT BILL OF MATERIAL
RT: 857-231-20 DESC: TUBE ASSEMBLY, HIGH RANGE REV: E2
ECN: 8CR58-93

ITEM NBR.	PART NUMBER	DESCRIPTION	QUANTITY	ECN
1	92-9165-A	GM TUBE,HIGH RANGE, ZP1300 LOC:	1.000 EA	4CR1-92
2	857-2-17	TUBE CAPSULE LOC:	1.000 EA	5CR22-90
3	857-2-10	CAP,TUBE CAPSULE,PROCESSED LOC:	1.000 EA	BM 5CR22-90
4	857-3-11	FOAM PACKING LOC:	1.000 EA	5CR22-90
5	857-3-8	SHIELD,LEAD LOC:	1.000 EA	5CR22-90
6	MSB-0115-3	WIRE, STRAND, 28 AWG, RED, TFE LOC:	.001 FT	4CR18-92
7	MSH-6216	TUBING, TEFLON #12 LOC:	.001 FT	5CR22-90
8	MSA-0007	SOLDER, CORE, 60/40, .031 DIA LOC:	.001 LB	5CR22-90
9	MSJ-4372	CEMENT, CONTACT, FASTBOND 10 LOC:	.001 EA	5CR22-90
10	700-115	SOURCE, URANIUM FOIL, .007 THK LOC:	1.000 EA	8CR58-93
11	857-2-22	SHIELD,LEAD END LOC:	1.000 EA	5CR22-90
12	OS-6061	TAPE, SCOTCH, 3/4" X 300" ROLL LOC:	.001 RL	5CR22-90
13	MSB-0115-2	WIRE, STRAND, 28 AWG, BLK, TFE LOC:	.001 FT	4CR18-92

Product Structure

Product No: 956A-201 RATEMETER DIGITAL AREA MONITOR
Rev: 005 ECN: 2CR7-97
Drawing Number:

Item No.	Product Number	DrawingNo.	Siz	Description	Quantity			ECN	Rev	Obs	Act
1	TP956A-201-3			TEST PROCEDURE FOR 956A-201 UD	.001	EA		9CR48-99	4	N	Y
2	942A-100-4			KIT, CONNECTOR MATING	1.000	EA	PS	4JR1-92	1	N	Y
3	956A-201-106			LOOP DIAGRAM	.001	EA		1590	2	N	Y
4	955A-1			MANUAL, GM AREA MONITOR	1.000	EA		1590	1	N	Y
5	956A-201-5			ASSEMBLY, DIGITAL RATEMETER	1.000	EA	PS	10CR40-95	2	N	Y
6	94095603			PROM, UDR W/DUMB TERMINAL COMM	1.000	EA	PS	1CR19-96	2	N	Y
7	958-1-24			DIAGRAM,INTERCONNECTING	.001	EA		1590	3	N	Y
8	958A-1-24			DIAGRAM,INTERCONNECTING	.001	EA		1590	3	N	Y
9	942-BOX			UDR PACKAGING	1.000	EA		1590	1	N	Y

*** END OF REPORT ***

ITEM NBR.	PART NUMBER	DESCRIPTION	QUANTITY			ECN
20	30-91-2	FERRULE LOC:	1.000	EA		3JR4-95
21	67-83-1P	INSERT,CONNECTOR,M,24-20 WIRE LOC:	5.000	EA		3JR4-95
22	92-9103-A	CONNECTOR, 4 POSITION, FEMALE LOC:	1.000	EA		3JR4-95
25	MSB-0072-35	WIRE, HOOK-UP, 22 AWG, YEL/GRN LOC: 5" LONG	.001	FT		3JR4-95
26	MSB-0069	WIRE. HV, LEAD WIRE, 22, 10K V LOC: 3" LONG	.001	FT		3JR4-95
27	36-96-1	TERMINAL, LUG, SOLDER, FEMALE LOC:	1.000	EA		10CR40-9
28	MSH-6222	TUBING, 3/16, BLACK LOC:	.001	FT		3JR4-95
29	67-78-2	CONNECTOR. 2 PIN CABLE HDR, F LOC:	1.000	EA		3JR4-9
30	942-100-35A	HARNESS,POWER SUPPLY TO PCB LOC:	1.000	EA	BM	3JR4-95
31	942-100-35B	HARNESS,MAIN PCB TO RELAY BOAR LOC:	1.000	EA	BM	3JR4-95
32	942A-100-35C	HARNESS, MAIN PCB/ANALOG OUT LOC:	1.000	EA	BM	3JR4-95
33	942-100-35D	HARNESS.DETECTOR POWER SUPPLY LOC:	1.000	EA	BM	3JR4-95
34	942-100-35E	HARNESS LOC:	1.000	EA	BM	10CR40-95
35	MSB-0072-31	WIRE. HOOK-UP. 22 AWG. YEL/BLK LOC: 5" LONG	.001	FT		3JR4-95
36	MSB-0072-32	WIRE. HOOK-UP, 22 AWG, YEL/BRN LOC: 5" LONG	.001	FT		3JR4-95
37	SM-2202	SLEEVE. SPIRAL-WRAP .06"-.5"OD LOC:	.001	FT		3JR4-95

TODAY: 5/30/96 COMPONENT BILL OF MATERIAL

RT: 956A-201-5 DESC: ASSEMBLY, DIGITAL RATEMETER REV: B

ECN: 10CR40-95

ITEM NBR.	PART NUMBER	DESCRIPTION	QUANTITY	ECN
1	956A-100-20	ASSY. FRONT PANEL LOC:	1.000 EA	BM 3JR4-95
2	942A-100-30	ASSY. REAR PANEL LOC:	1.000 EA	BM 3JR4-95
4	956A-201-55	ASSEMBLY. POWER SUPPLY LOC:	1.000 EA	BM 10CR40-95
5	956-200-10	ASSY. MAIN PC 1E LOC:	1.000 EA	BM 3JR4-95
6	942-200-60	ASSY. HIGH VOLTAGE BOARD LOC:	1.000 EA	BM 3JR4-95
7	942A-100-24	TOP RAIL LOC:	2.000 EA	3JR4-95
8	942-100-25	RAIL.BOTTOM LOC:	2.000 EA	3JR4-95
9	5-532	SCREW. MACH. PH. 4-40 X .38. LOC:	4.000 EA	3JR4-95
10	5-706	NUT. HEX. 4-40. NY. BO LOC:	1.000 EA	3JR4-95
11	5-186	SCREW. MACH. PH. 4-40 X .31. LOC:	8.000 EA	3JR4-95
12	5-836	WASHER. SPLIT. 4. SS LOC:	8.000 EA	3JR4-95
13	200-135	NAME PLATE. UNIVERSAL LOC:	1.000 EA	3JR4-95
14	5-710	WASHER. FLAT. 4. NY. BO LOC:	1.000 EA	3JR4-95
16	92-9124-A	COUPLER. FEMALE LOC:	1.000 EA	3JR4-95
18	50-89	CABLE.COAX..RG-174U.34 AWG.1/C LOC: 5" LONG	1.000 FT	3JR4-95
19	30-91-1	PIN. COAX LOC:	1.000 EA	3JR4-95

TODAY: 5/30/96 COMPONENT BILL OF MATERIAL

PART: 956A-201-5 DESC: ASSEMBLY, DIGITAL RATEMETER REV: B

ECN: 10CR40-95

ITEM NBR.	PART NUMBER	DESCRIPTION	QUANTITY		ECN
38	942-100-28	OPTION BOARD SUPPORT MOUNT LOC:	1.000	EA	BM 3JR4-95
39	5-953	SCREW,TYPE 25,#4X.44LG,FH,PHIL LOC:	2.000	EA	3JR4-95
40	5-678	SCREW. MACH, RH, 4-40 X .31 LOC:	1.000	EA	10CR40-9
41	MSH-6228	TUBING, 1/4, BLACK LOC:	.001	FT	3JR4-95
42	MSB-0072-2	WIRE, HOOK-UP, 22 AWG, BLACK LOC:	.001	FT	10CR40-9
43	5-193	SCREW. MACH, FH, 4-40 X .38, LOC:	4.000	EA	3JR4-95

8:17:31 300 VICTOREEN, INC: PAGE 1

TODAY: 5/30/96 COMPONENT BILL OF MATERIAL

RT: 956A-100-20 DESC: ASSY. FRONT PANEL REV: B

ECN: 11CR10-89

ITEM NBR.	PART NUMBER	DESCRIPTION	QUANTITY		ECN
0	0998010	TAPE, TRANSFER, 2 MIL, HI-TACK LOC:	.001	RL	11CR10-8
1	956A-100-22	FRONT PANEL W/DECAL LOC:	1.000	EA BM	6JR1-86
2	946-100-23	INSERT,BACKLIGHT LOC:	1.000	EA	11CR10-8
3	956-100-15	ASSY,PC BOARD,FRONT PANEL LOC:	1.000	EA BM	11CR10-8
4	842-1-51	FASTENER PAWL LOC:	1.000	EA	6JR1-86
5	5-841	WASHER, FLAT, 4, P LOC:	12.000	EA	11CR10-8
6	5-196	SCREW, MACH, PH, 4-40 X .38, LOC:	4.000	EA	11CR10-8

TODAY: 5/30/96

RT: 956-100-15

VICTOREEN, INC.

COMPONENT BILL OF MATERIAL

DESC: ASSY,PC BOARD.FRONT PANEL

REV: C

ECN: 6CR14-91

ITEM NBR.	PART NUMBER	DESCRIPTION	QUANTITY	ECN
1	942-100-16	BOARD.FRONT PANEL P.C.,PROCESS LOC:	1.000 EA	3CR47-89
2	942-100-27	KIT. UDR FRONT PANEL DISPLAY LOC: D1-D6	1.000 EA	BM 3CR47-89
5	11-208	SWITCH. MOMENT, SPST, 50V 25MA LOC: SW1,3,4,6	4.000 EA	3CR47-89
6	9-89	CAP, PUSHBUTTON SWITCH, GRAY LOC: SW1,3,4,6,	4.000 EA	6CR14-91
7	185-3981-3	NETWORK. RESISTOR. 180, 8 PIN LOC: RP8,9	2.000 EA	3CR47-89
8	185-3981-2	NETWORK. RESISTOR, 180. 10 PIN LOC: RP2-7,10,11	8.000 EA	3CR47-89
9	67-72	CONNECTOR. 32 PIN, STR HDR. M LOC:	3.000 EA	6CR14-91
10	185-3974-2	NETWORK. RESISTOR. 180. 8 PIN LOC: RP1,12	2.000 EA	3CR47-89
11	65-141	OPTOEL LED RED/GRN RECT 2ANODE LOC: D7-35	29.000 EA	3CR47-89
12	11-281	SWITCH & CAP ASS'Y LOC: SW7	1.000 EA	BM 6CR14-91
13	4-9	SCREW.METRIC.PH.M3X8 SS LOC:	2.000 EA	6CR14-91
14	4-10	WASHER.SPLIT.M3.SS LOC:	2.000 EA	6CR14-91
16	67-90-36	CONNECTOR. 36 PIN. HEADER. M LOC: ROW 100.200.300	3.000 EA	3CR47-89
18	942-100-42	BAR GRAPH HOUSING LOC:	.001 EA	3CR47-89
19	942-100-43	BAR GRAPH HOUSING MATE LOC:	.001 EA	3CR47-89

VICTOREEN, INC.
COMPONENT BILL OF MATERIAL
DESC: ASSY, REAR PANEL

REV: B
ECN: 9CR23-93

ITEM NBR.	PART NUMBER	DESCRIPTION	QUANTITY	ECN
1	942-100-31	PANEL,REAR PROCESSED LOC:	1.000 EA	BM 6JR1-86
2	942-100-32	SILKSCREEN, REAR PANEL LOC:	1.000 EA	9CR23-93
3	67-80-37P	CONNECTOR, 37 PIN, CIRCULAR, M LOC: P1	1.000 EA	9CR23-93
4	5-275	SCREW, MACH, PH, 6-32 X .38, LOC: AT P1 & P2	8.000 EA	9CR23-93
5	67-80-14S	CONNECTOR, 14 PIN, CIRCULAR, F LOC: P2	1.000 EA	9CR23-93
6	67-80-4P	CONNECTOR, 4 PIN, CIRCULAR, M LOC: P3	1.000 EA	9CR23-93
7	5-837	WASHER, SPLIT, 6, SS LOC: AT P1 & P2	8.000 EA	9CR23-93
8	5-836	WASHER, SPLIT, 4, SS LOC: AT P3	4.000 EA	9CR23-93
9	18-23-1	HOLDER, FUSE, 3AG, 20A 250V LOC: F2	1.000 EA	9CR23-93
10	92-9106-A	CONNECTOR, COAX JACK, HI VOLT LOC: P4	1.000 EA	9CR23-93
11	5-839	WASHER, SPLIT, 3, SS LOC: P6	4.000 EA	6JR1-86
12	92-7027-1A	FUSE, 2A, 250V LOC: F2	1.000 EA	9CR23-93
13	5-196	SCREW, MACH, PH, 4-40 X .38, LOC: AT P3	4.000 EA	9CR23-93
14	5-849	NUT, HEX, 3-56, SS LOC: P6	2.000 EA	6JR1-86
15	92-9074-A	RECEPTACLE, BULKHEAD, BNC LOC: P5	1.000 EA	9CR23-93
16	92-7039-A	TERMINAL, LUG, SOLDER, 3/8 LOC:	2.000 EA	6JR1-86

TODAY: 5/30/96 COMPONENT BILL OF MATERIAL

PART: 942A-100-30 DESC: ASSY, REAR PANEL REV: B

ECN: 9CR23-93

ITEM NBR.	PART NUMBER	DESCRIPTION	QUANTITY	ECN
17	942-100-44	BRACKET, VOLTAGE BOARD SUPPORT LOC: P6	1.000 EA	6JR1-86
18	68-15	CONNECTOR, 24 PIN LOC: P6	1.000 EA	9CR23-93
19	5-135	SCREW, MACH, PH, 3-56 X .38 LOC: P6	2.000 EA	6JR1-86

VICTOREEN, INC.
COMPONENT BILL OF MATERIAL
DESC: ASSEMBLY, POWER SUPPLY

REV: A
ECN: 3JR4-95

ITEM NBR.	PART NUMBER	DESCRIPTION	QUANTITY		ECN
1	942-100-41	POWER SUPPLY BRACKET LOC:	1.000	EA	3JR4-95
2	956A-201-70A	RELAY BOARD & HARNESS ASSEMBLY LOC:	1.000	EA	BM 3JR4-95
3	942-200-50	POWER SUPPLY LOC:	1.000	EA	3JR4-95
4	942-100-52	FISH PAPER,RELAY BOARD LOC:	1.000	EA	BM 3JR4-95
5	942-100-53	FISH PAPER, POWER SUPPLY LOC:	1.000	EA	BM 3JR4-95
6	5-293	SCREW, MACH, PH. 6-32 X .56, LOC:	10.000	EA	3JR4-95
7	5-837	WASHER, SPLIT, 6, SS LOC:	6.000	EA	3JR4-95
8	5-852	NUT, HEX, 6-32, SS, SM LOC:	10.000	EA	3JR4-95
9	40-164	SPACER, .12, .14ID/.250D, RND LOC:	1.000	EA	3JR4-95
10	40-204	SPACER,.12LG..14ID/.250D, RND LOC:	7.000	EA	3JR4-95
11	5-712	WASHER, FLAT, 6, NY, NAT LOC:	4.000	EA	3JR4-95
12	57-46	TERMINAL BLOCK, 8 POINT LOC:	1.000	EA	3JR4-95
13	5-838	WASHER, FLAT, 6, SS LOC:	4.000	EA	3JR4-95
14	942-100-35F	HARNESS LOC:	1.000	EA	BM 3JR4-95

- Left Blank -

Product Structure

Product No: 942A-100-70A HARNESS ASS'Y RELAY BOARD
Rev: 002 ECN: 1386
Drawing Number:

Item No.	Product Number	DrawingNo.	Siz	Description	Quantity	ECN	Rev	Obs	Act
	MSB-0072-10			WIRE, HOOK-UP, 22 AWG, GRAY Loc: K3-A TO ITEM 3 8.25IN. LG	.001 FT	1590	5	N	Y
	MSB-0072-11			WIRE, HOOK-UP, 22 AWG, VIOLET Loc: K1-F TO ITEM 3, 6.75IN. LG	.001 FT	1590	5	N	Y
	MSB-0072-14			WIRE, HOOK-UP, 22 AWG, WHT/BLK Loc: K3-B TO ITEM 3, 8.25IN. LG	.001 FT	1590	5	N	Y
	MSB-0072-15			WIRE, HOOK-UP, 22 AWG, WHT/RED Loc: K3-D TO ITEM 3, 8.5IN. LG	.001 FT	1590	5	N	Y
	MSB-0072-16			WIRE, HOOK-UP, 22 AWG, WHT/GRN Loc: K4-A TO ITEM 3, 9.5IN. LG	.001 FT	1590	5	N	Y
	MSB-0072-17			WIRE, HOOK-UP, 22 AWG, WHT/YEL Loc: K3-F TO ITEM 3, 8.75IN. LG	.001 FT	1590	5	N	Y
	MSB-0072-18			WIRE, HOOK-UP, 22 AWG, WHT/BLU Loc: K4-B TO ITEM 3, 9.5IN. LG	.001 FT	1590	5	N	Y
	MSB-0072-19			WIRE, HOOK-UP, 22 AWG, WHT/BRN Loc: K3-C TO ITEM 3, 8.5IN. LG	.001 FT	1590	5	N	Y
	MSB-0072-20			WIRE, HOOK-UP, 22 AWG, WHT/ORN Loc: K3-E TO ITEM 3, 8.75IN. LG	.001 FT	1590	5	N	Y
	MSB-0072-21			WIRE, HOOK-UP, 22 AWG, WHT/GRY Loc: K4-D TO ITEM 3, 9.75IN. LG	.001 FT	1590	5	N	Y
	MSB-0072-22			WIRE, HOOK-UP, 22 AWG, WHT/VIO Loc: K4-C TO ITEM 3, 9.75IN. LG	.001 FT	1590	5	N	Y
	MSB-0072-23			WIRE, HOOK-UP, 22, WHT/BLK/RED Loc: K4-F TO ITEM 3, 10IN. LG	.001 FT	1590	5	N	Y
	MSB-0072-24			WIRE, HOOK-UP, 22, WHT/BLK/GRN Loc: K5-C TO ITEM 3, 11IN. LG	.001 FT	1590	5	N	Y
	MSB-0072-25			WIRE, HOOK-UP, 22, WHT/BLK/YEL Loc: K5-B TO ITEM 3, 10.5IN. LG	.001 FT	1590	5	N	Y
	MSB-0072-27			WIRE, HOOK-UP, 22, WHT/BLK/BRN Loc: K4-E TO ITEM 3, 10IN. LG	.001 FT	1590	5	N	Y
	MSB-0072-28			WIRE, HOOK-UP, 22, WHT/BLK/ORN Loc: K5-A TO ITEM 3, 10.5IN. LG	.001 FT	1590	5	N	Y

Product Structure

Product No: 942A-100-70A HARNESS ASS'Y RELAY BOARD
Rev: 002 ECN: 1386
Drawing Number:

Item No.	Product Number	DrawingNo.	Siz	Description	Quantity		ECN	Rev	Obs	Act
	MSB-0072-29			WIRE, HOOK-UP, 22, WHT/BLK/GRY	.001	FT	1590	5	N	Y
				Loc: K5-E TO ITEM 2, 13IN. LG						
	MSB-0072-3			WIRE, HOOK-UP, 22 AWG, RED	.001	FT	1590	5	N	Y
				Loc: K1-B TO ITEM 3, 6.25IN. LG						
	MSB-0072-35			WIRE, HOOK-UP, 22 AWG, YEL/GRN	.001	FT	1590	5	N	Y
				Loc: K2-B TO ITEM 2, 9IN. LG						
	MSB-0072-36			WIRE, HOOK-UP, 22 AWG, YEL/BLU	.001	FT	1590	5	N	Y
				Loc: K2-A, 9.25IN, K2-A TO K5-D, 5.75IN						
	MSB-0072-5			WIRE, HOOK-UP, 22 AWG, YELLOW	.001	FT	1590	5	N	Y
				Loc: K1-D TO ITEM 3, 6.5IN. LG						
	MSB-0072-7			WIRE, HOOK-UP, 22 AWG, BLUE	.001	FT	1590	5	N	Y
				Loc: K1-E TO ITEM 3, 6.75IN. LG						
	MSB-0072-8			WIRE, HOOK-UP, 22 AWG, BROWN	.001	FT	1590	5	N	Y
				Loc: K1-A TO ITEM 3, 6.25IN. LG						
	MSB-0072-9			WIRE, HOOK-UP, 22 AWG, ORANGE	.001	FT	1590	5	N	Y
				Loc: K1-C TO ITEM 3, 6.5IN. LG						
1	942-100-70			ASSY,PC BOARD,RELAY	1.000	EA PS	12CR1-90	1	N	Y
2	67-83-1S			INSERT,CONNECTOR,F,24-20 WIRE	2.000	EA	1590	3	N	Y
3	67-83-1P			INSERT,CONNECTOR,M,24-20 WIRE	21.000	EA	1590	3	N	Y
5	61-1			HARNESS TIE PANDUIT MINIATURE	8.000	EA	1590	1	N	Y
8	36-86			TERM, LUG, CRIMP, 22-16, #6-8	1.000	EA	1590	1	N	Y
9	GT2			PRINTED CIRCUIT BD TRAVELLERS	.000	EA	1590	2	N	Y

*** END OF REPORT ***

Product Structure

Product No: 956-200-10 ASSEMBLY, MAIN PC 1E
Rev: 012 ECN: 8CR8-99
Drawing Number:

Item No.	Product Number	DrawingNo.	Siz	Description	Quantity	ECN	Rev	Obs	Act
	11-209			SWITCH,ROTARY-DIP,16 POS,BINAR	1.000 EA	1590	2	N	Y
		Loc: RDS1							
	11-212-1			SWITCH, PUSH, SPST, FOR PCB'S	3.000 EA	1590	1	N	Y
		Loc: SW1,2,3							
	18-22			HOLDER, FUSE, PCB MOUNT	1.000 EA	1590		N	Y
		Loc: F1							
	185-1419			RESISTOR, 825, .25W, 1%,MF	1.000 EA	1590	1	N	Y
		Loc: R83							
	341032			RESISTOR, 10K, .25W, 1%	6.000 EA	1590	1	N	Y
		Loc: R1,82,87,88,94,96							
	342041			RESISTOR, 200K, .25W, 1%	1.000 EA	1590		N	Y
		Loc: R61							
	341062			RESISTOR, 10M, 1/4W, 1%	1.000 EA	1590	1	N	Y
		Loc: R90							
	185-1434			RESISTOR, 511K, .25W, 1%	1.000 EA	1590	2	N	Y
		Loc: R93							
	185-3542			RESISTOR, 47.5K, .25W, 1%, MFF	1.000 EA	1590		N	Y
		Loc: R10							
	342031			RESISTOR, 20K, .25W, 1%	1.000 EA	1590	1	N	Y
		Loc: R92							
	185-1477			RESISTOR, 24.3K, .25W, 1%	1.000 EA	1590		N	Y
		Loc: R2							
	185-2496			RESISTOR, 2K, .25W, 1%, MF	2.000 EA	1590	1	N	Y
		Loc: R80,89							
	185-2400			RESISTOR, 332, .25W, 1%	1.000 EA	1590		N	Y
		Loc: R86							
	185-3818			RESISTOR, 243, .25W, 1%, MFF	1.000 EA	1590		N	Y
		Loc: R84							
	185-3877			RESISTOR, 221, .25W, 1%, MFF	1.000 EA	1590		N	Y
		Loc: R85							
	185-3855			RESISTOR, 475, .25W, 1%, MFF	2.000 EA	1590		N	Y
		Loc: R68,75							

Product Structure

Product No: 956-200-10 ASSEMBLY, MAIN PC 1E
Rev: 012 ECN: 8CR8-99
Drawing Number:

Item No.	Product Number	DrawingNo.	Siz	Description	Quantity	ECN	Rev	Obs	Act
	185-3853	NONE	PN	RESISTOR, 10 OHM, 1/4W, 1%	9.000 EA	1419	1	N	Y
		Loc: R50-53,58,60,69,77,78							
	343021			RESISTOR, 3.01K, .25W, 1%	3.000 EA	1590		N	Y
		Loc: R3,4,5							
	92-1000-415A			RESISTOR, 1.5K, .25W, 2%,MF	2.000 EA	9CR26-99	5	N	Y
		Loc: R13,14							
	185-3851			RESISTOR, 866, .25W, 1%, MFF	1.000 EA	1590		N	Y
		Loc: R63							
	185-3890			RESISTOR, 100, 1/8W, 1%, MFF	8.000 EA	1590		N	Y
		Loc: R65,73,74,42,44,46,49,64							
	185-3892			RESISTOR, 1K, 1/4W, 1%, MFF	11.000 EA	1590	1	N	Y
		Loc: R12,55-57,66,76,79,81,91,95,103							
	185-3894			RESISTOR, 49.9K, .25W, 1%, MFF	4.000 EA	1590		N	Y
		Loc: R41,43,47,48							
	185-3906			RESISTOR, 3.32K, .25W, 1%, MFF	3.000 EA	1590		N	Y
		Loc: R18,31,36							
	92-1020-251A			RESISTOR, 51, 1W, 5%, CARBON	1.000 EA	1590	2	N	Y
		Loc: R54							
	19-62			FUSE, 50MA 125V, PLASTIC CASE	1.000 EA	1590		N	Y
		Loc: F1							
	21-2092			CAPACITOR, .01 UF, 100V	7.000 EA	1590		N	Y
		Loc: C10,11,16-19,38							
	21-2093			CAPACITOR, 10 PF, 300V	2.000 EA	1590		N	Y
		Loc: C28,31							
	21-2101			CAPACITOR, 6.8 UF, 35V	1.000 EA	1590	1	N	Y
		Loc: C2							
	21-2104			CAPACITOR, 100 PF, 300V	2.000 EA	1590		N	Y
		Loc: C29,34							
	21-2108			330PF CAPACITOR 100V	2.000 EA	1205	1	N	Y
		Loc: C5,35							
	21-2113		PN	.1UF CAPACITOR, 100V	1.000 EA	1372	2	N	Y
		Loc: C39							

Product Structure

Product No: 956-200-10 ASSEMBLY, MAIN PC 1E
Rev: 012 ECN: 8CR8-99
Drawing Number:

Item No.	Product Number	DrawingNo.	Siz	Description	Quantity	ECN	Rev	Obs	Act
	21-976	Loc: C9		CAPACITOR, 100 UF, 10V, 20%	1.000 EA	1590	1	N	Y
	30-90	Loc: J6		SOCKET, COAX, SUB-MINIATURE	1.000 EA	1590		N	Y
	33-139-16	Loc: U14		SOCKET, I.C., 16 PIN, PCB MNT	1.000 EA	1590	1	N	Y
	33-139-28	Loc: U23		SOCKET, IC, 28 PIN, PCB MNT	1.000 EA	1213		N	Y
	33-139-40	NONE Loc: U15	PN	SOCKET, I.C., 40 PIN, PCB MNT	1.000 EA	1776	3	N	Y
	92-4094	Loc: U75		CMOS 8 DIGIT LED DRIVER	1.000 EA	1590	1	N	Y
	92-4083	Loc: U21		I.C.,CDM6264,RAM,8K X 8 CMOS	1.000 EA	1590	1	N	Y
	67-71	Loc: J3		CONNECTOR, 50 PIN, STR HDR, F	1.000 EA	1590	1	N	Y
	67-76-10	67-76-TAB Loc: J5	C	CONNECTOR, MALE STR. SQ. POST	1.000 EA	1585	7	N	Y
	67-76-2	67-76-TAB Loc: J9	C	CONNECTOR, MALE STR. SQ. POST	1.000 EA	1585	7	N	Y
	67-76-6	67-76-TAB Loc: J2	C	CONNECTOR, MALE STR. SQ. POST	1.000 EA	1585	7	N	Y
	67-77-6	67-77-TAB Loc: J1	C	CONNECTOR, MALE STR. SQ. POST	1.000 EA	1585	4	N	Y
	67-85-8B	Loc: J4,8		CONNECTOR, 8 PIN,RT ANG HDR,M	2.000 EA	1590	2	N	Y
	92-1060-3A	Loc: RN3		NETWORK, RESISTOR, 4.7K OHMS	1.000 EA	1590	1	N	Y
	92-1061-1A	Loc: RN1		NETWORK, RESISTOR, 1K, 1W, 2%	1.000 EA	1590	2	N	Y
	92-1061-2A	Loc: RN2,4		NETWORK, RESISTOR, 4.7K	2.000 EA	1590	2	N	Y

Product No: 956-200-10 ASSEMBLY, MAIN PC 1E
Rev: 012 ECN: 8CR8-99
Drawing Number:

Item No.	Product Number	DrawingNo.	Siz	Description	Quantity	ECN	Rev	Obs	Act
	92-1062-2492A	Loc: R67,70		RESISTOR, 24.9K, .25W, 1%	2.000 EA	1590	5	N	Y
	92-1062-24R9A	Loc: R72		RESISTOR, 24.9, .25W, 1%	1.000 EA	1590	5	N	Y
	92-1062-5762A	Loc: R24,25		RESISTOR, 57.6K, .25W, 1%	2.000 EA	1590	5	N	Y
	92-1062-8661A	Loc: R26,30		RESISTOR, 8.66K, 1/4W 1%	2.000 EA	1590	5	N	Y
	92-1062-9090A	Loc: R59		RESISTOR, 909, .25W, 1%	1.000 EA	1590	5	N	Y
	92-1062-9091A	Loc: R7		RESISTOR, 9.09K, .25W, 1%	1.000 EA	1590	5	N	Y
	92-1062-9531A	Loc: R17		RESISTOR, 9.53K, 1%	1.000 EA	1590	5	N	Y
	92-2003-10A	Loc: VR4,5		POTENTIOMETER, 10K OHM	2.000 EA	1590		N	Y
	92-2003-15A	Loc: VR9		POTENTIOMETER, 200K OHM	1.000 EA	1590	1	N	Y
	92-2003-5A	Loc: VR8		POTENTIOMETER, 200 OHM	1.000 EA	1590		N	Y
	92-2003-7A	Loc: VR1,2,6,7,10-12		POTENTIOMETER, 1K OHM	7.000 EA	1590		N	Y
	92-2003-9A	Loc: VR13		POTENTIOMETER, 5K OHM	1.000 EA	1590		N	Y
	92-3000-21	Loc: C3,4,6		CAPACITOR, 27 PF, 300V, 5%	3.000 EA	1590	6	N	Y
	92-3012-A	Loc: C1		CAPACITOR, 33 UF	1.000 EA	1590	2	N	Y
	92-4009-5A	Loc: U63,93		I.C., 54LS74J	2.000 EA	1590		N	Y
	92-4009-6A	Loc: U17		I.C., 54LS32,QUAD OR GATES	1.000 EA	1590	2	N	Y

Product No: 956-200-10 ASSEMBLY, MAIN PC 1E
Rev: 012 ECN: 8CR8-99
Drawing Number:

Item No.	Product Number	DrawingNo.	Siz	Description	Quantity			ECN	Rev	Obs	Act
	92-4009-9A			IC, 54LS11J	1.000	EA	PS	1590		N	Y
		Loc: U101									
	92-4010-1A			I.C., 54LS221J	1.000	EA	PS	1590		N	Y
		Loc: U19									
	92-4010-4A			IC, 54LS138J, 16PIN, DIP	4.000	EA		1590	1	N	Y
		Loc: U1,2,5,34									
	92-4013-A			I.C., 54LS240,OCTAL BUFFER	2.000	EA		1590	1	N	Y
		Loc: U18,62									
	92-4020-A	NONE	A	IC, HIGH SPEED DUAL COMPARATOR	1.000	EA		1592	1	N	Y
		Loc: U91									
	92-4021-2A			IC TI SNJ54LS390J	3.000	EA		1590	2	N	Y
		Loc: U30-32									
	92-4021-3A			I.C.,54LS393,DUAL 4BIT COUNTER	2.000	EA		1590	1	N	Y
		Loc: U45,46									
	92-4021-5A			I.C., 54LS05,HEX INVERTER	1.000	EA		1590	1	N	Y
		Loc: U94									
	92-4021-6A			I.C.,54LS14,14 PIN,DIP CERAMIC	2.000	EA		1590	1	N	Y
		Loc: U11,102									
	92-4023-A	92-4023-A	A	9667 DISPLAY DRIVER	1.000	EA		1990	6	N	Y
		Loc: U48									
	92-4027-1A			I.C., 54LS244,OCTAL BUFFER	7.000	EA		1590	2	N	Y
		Loc: U12,13,36,40-42,74									
	92-4027-3A			IC TI SN54LS273J	6.000	EA		1590	2	N	Y
		Loc: U35,43,44,60,71,72									
	92-4027-5A		A	7304 OCTAL TRANCEIVER	2.000	EA		1407	1	N	Y
		Loc: U16,73									
	92-4031-A			I.C.,4N25	1.000	EA		1590	2	N	Y
		Loc: S1									
	92-4036-A			I.C., 156H	1.000	EA		1590	1	N	Y
		Loc: U90									
	92-4004-B			I.C., 124	2.000	EA	PS	1590		N	Y
		Loc: U80,81									

Product Structure

Product No: 956-200-10 ASSEMBLY, MAIN PC 1E
Rev: 012 ECN: 8CR8-99
Drawing Number:

Item No.	Product Number	DrawingNo.	Siz	Description	Quantity		ECN	Rev	Obs	Act
	92-4063-A	Loc: U96		I.C., 14093B	1.000 EA		1590		N	Y
	92-5001-1B	TAB-DWG Loc: Q1,2,4,5	C	TRANSISTOR	4.000 EA		1478	3	N	Y
	92-5001-2B	TAB-DWG Loc: Q3	C	TRANSISTOR	1.000 EA		1478	3	N	Y
	92-6000-2A	92-6000-2A Loc: D8,9	B	DIODES	2.000 EA	PS	1670	4	N	Y
	92-6001-3A	92-6001-3A Loc: D1,10	B	DIODE, 1N4005 GP	2.000 EA		1658	4	N	Y
	92-6015-A	Loc: D4,6,7		DIODE, TRANSIENT SUPPRESSOR	3.000 EA		1590	1	N	Y
	92-9036-A	Loc: CR1		CRYSTAL, 4 MHZ, H3W PACKAGE	1.000 EA		1205	2	N	Y
	92-9125-A1	Loc: U15		IC 6802,MICROPROCESSOR W/CLOCK	1.000 EA		1590	1	N	Y
	92-9126	Loc: U50-59		IC MC14511BALD,CERAMIC,LATCH	10.000 EA	PS	1590	1	N	Y
	92-9127	Loc: U61		I.C., ULS-2803H, -55/125 DEG C	1.000 EA		1590	2	N	Y
	92-9128	Loc: U92		I.C., LM193J,-55 TO 125 DEG C	1.000 EA		1590	3	N	Y
	92-9129	Loc: U82		I.C., 7524SQ, D/A CONVERTER	1.000 EA		1590	3	N	Y
	92-9130	Loc: U47	B	I.C., LS122	1.000 EA	PS	1374	2	N	Y
	92-9131	Loc: U10		I.C., HI TEMP/883	1.000 EA		1590		N	Y
	92-9155-1	Loc: U33		IC, EE PROM, 64 X 16, SERIAL	1.000 EA		1590	2	N	Y
	185-3852	Loc: R62		RESISTOR, 619, 1/4W, 1%, MFF	1.000 EA		1590		N	Y

Product No: 956-200-10 ASSEMBLY, MAIN PC 1E
Rev: 012 ECN: 8CR8-99
Drawing Number:

Item No.	Product Number	DrawingNo.	Siz	Description	Quantity			ECN	Rev	Obs	Act
	92-4006-B			I.C., 113H, REF VOLTAGE DIODE	2.000	EA	PS	1590		N	Y
		Loc: D2,3									
1	942-100-11			PCB, PROCESSED, UDR MAIN	1.000	EA		1590	3	N	Y
24	94-212	94-212		UDR MASTER DECODER 1E	1.000	EA	PS	2CR71-92	1	N	Y
		Loc: U14									
26	64-1			PAD, MOUNTING, TRANSISTOR	1.000	EA		1590	1	N	Y
		Loc: U95									
33	92-4010-12A			IC ,0070-1H,-2H,-3H	1.000	EA	PS	1590		N	Y
		Loc: U95									
48	942-200-13			SCHEMATIC, UDR	1.000	EA		1590	8	N	Y
49	21-2103			CAPACITOR, 1 UF, 25V	14.000	EA		1590	1	N	Y
		Loc: C20-25,27,30,32,33,36,37,40,41									
81	185-3893			RESISTOR, 10K, .25W, 1%, MFF	15.000	EA		1590		Y	Y
		Loc: R15,16,27,29,32-35,37-40,45,71,28									
100	92-9042-A			JUMPER BLOCK	10.000	EA		1590	2	N	Y
		Loc: JP2-2,3,JP4-2,3,JP5-2,3,JP6-1,2,JP7-1,2,JP3-(1-5)									
101	92-9041-A			CONNECTOR, 36 PIN, HEADER, M	1.000	EA		1590	2	N	Y
		Loc: JP2-JP7,RESET,TP									
109	92-7003-1A	PER DWG	B	TEST JACK	3.000	EA		1445	2	N	Y
		Loc: SEE DWG									
111	21-2176-1			CAPACITOR, .02 UF, 50V	6.000	EA		1590	2	N	Y
		Loc: U17,46,47,63,93,94									
112	21-2176-2			CAPACITOR, .03 UF, 50V	11.000	EA		1590	2	N	Y
		Loc: U1,10,19,5,52-56,14,59									
113	21-2176-3			CAPACITOR, .03 UF, 50V	9.000	EA		1590	2	N	Y
		Loc: U13,18,40,42,44,60,71-73									
114	21-2176-4			CAPACITOR, .03 UF, 50V	2.000	EA		1590	2	N	Y
		Loc: U21,23									
115	105-37-1			JUMPER RIBBON 18 COND W/TERM S	5.000	EA		1590		N	Y
		Loc: SEE DWG									
123	92-9099-A			TERMINAL, FEED THRU, MINIATURE	2.000	EA		1590		N	Y
		Loc: SEE DWG									

Product No: 956-200-10 ASSEMBLY, MAIN PC 1E
Rev: 012 ECN: 8CR8-99
Drawing Number:

Item No.	Product Number	DrawingNo.	Siz	Description	Quantity	ECN	Rev	Obs	Act
124	GT53			TRAVELLER,MULTI-WIRE PC BOARD	1.000 EA	1590	2	N	Y
125	MSH-6257			TUBING,SILICONE,.25ID X .38ID	.001 EA	1590	1	N	Y
		Loc: .65 INCHES LONG							

*** END OF REPORT ***

Product Structure

Product No: 942-200-60 ASSEMBLY, HIGH VOLTAGE BOARD
Rev: 002 ECN: 1379
Drawing Number:

Item No.	Product Number	DrawingNo.	Siz	Description	Quantity	ECN	Rev	Obs	Act
	341032			RESISTOR, 10K, .25W, 1%	2.000 EA	1590	1	N	Y
		Loc: R18,R19							
	185-3813			RESISTOR, 4.75K, .25W, 1%, MFF	2.000 EA	1590		N	Y
		Loc: R9,R17							
	341041			RESISTOR, 100K, .25W, 1%	1.000 EA	1590	1	N	Y
		Loc: R13							
	185-1465	NONE	PN	RESISTOR,100 OHMS,.25W, 1%, MF	2.000 EA	1913	1	N	Y
		Loc: R14,R20							
	185-2400			RESISTOR, 332, .25W, 1%	1.000 EA	1590		N	Y
		Loc: R8							
	185-3892			RESISTOR, 1K, 1/4W, 1%, MFF	2.000 EA	1590	1	N	Y
		Loc: R15,R10							
	185-3855			RESISTOR, 475, .25W, 1%, MFF	1.000 EA	1590		N	Y
		Loc: R4							
	347521			RESISTOR, 7.5K, .25W, 1%	1.000 EA	9CR57-99	2	N	Y
		Loc: R11							
	185-3853	NONE	PN	RESISTOR, 10 OHM, 1/4W, 1%	2.000 EA	1419	1	N	Y
		Loc: R6,R7							
	185-2445			RESISTOR, 150, .25W, 1%	1.000 EA	1590	1	N	Y
		Loc: R12							
	343021			RESISTOR, 3.01K, .25W, 1%	1.000 EA	1590		N	Y
		Loc: R3							
	185-3827	NONE	PN	RESISTOR, 61.9K, .25W, 1%	1.000 EA	1419	1	N	Y
		Loc: R16							
	185-3980-1			RESISTOR, 100M/100K, 1W ,1%	1.000 EA	1590		N	Y
		Loc: R2							
	19-64-1			FUSE, 12V, 5A,(NO LOAD)RESET-	1.000 EA	1590	1	N	Y
		Loc: PTC							
	21-2051			CAPACITOR, .01 UF, 3KV	5.000 EA	1590	1	N	Y
		Loc: C2,C3,C4,C5,C6							
	21-2101			CAPACITOR, 6.8 UF, 35V	1.000 EA	1590	1	N	Y
		Loc: C1							

Product Structure

Product No: 942-200-60 ASSEMBLY, HIGH VOLTAGE BOARD
Rev: 002 ECN: 1379
Drawing Number:

Item No.	Product Number	DrawingNo.	Siz	Description	Quantity		ECN	Rev	Obs	Act
	21-2103			CAPACITOR, 1 UF, 25V	4.000	EA	1590	1	N	Y
		Loc: C9,C10,C11,C12								
	21-2119			CAPACITOR, .1 UF, 200V	1.000	EA	1590	1	N	Y
		Loc: C8								
	21-2134			CAPACITOR, 820 PF, 200V, 10%	1.000	EA	1590		N	Y
		Loc: C7								
	21-2178-680			CAPACITOR, 68 UF, 16V, 20%	1.000	EA	10CR4-99	1	N	Y
		Loc: C14								
	21-815			CAPACITOR, .002 UF, 1000V, 20%	1.000	EA	1590		N	Y
		Loc: C13								
	23-203			TRANSISTOR, TIP121, DARLINGTON	1.000	EA	1590		N	Y
		Loc: Q2								
	52-350-1			DIODE, RECTIFIER, HIGH VOLTAGE	4.000	EA	1590	2	N	Y
		Loc: D1,D2,D3,D4								
	67-84-8B			CONNECTOR, 8 PIN RT ANG HDR, F	1.000	EA	1590		N	Y
		Loc: J8								
	88-10			COMPOUND, THERMALCOTE	.000	OZ	1590		N	Y
		Loc: Q1								
	92-2003-8A			POTENTIOMETER, 2K OHM	1.000	EA	1590		N	Y
		Loc: R5								
	92-4004-B			I.C., 124	1.000	EA PS	1590		N	Y
		Loc: U1								
	92-5001-1B	TAB-DWG	C	TRANSISTOR	1.000	EA	1478	3	N	Y
		Loc: Q3								
	92-6001-3A	92-6001-3A	B	DIODE, 1N4005 GP	2.000	EA	1658	4	N	Y
		Loc: D5,D6								
	92-9107-A			HEADER, STRAIGHT POST, 4 PIN	1.000	EA	1590		N	Y
		Loc: J1								
	942-200-63			SCHEMATIC, HIGH VOLTAGE BRD-1E	.000	EA	1590	1	N	Y
1	942-100-61			HIGH VOLTAGE BR'D, PROCESSED	1.000	EA	1590		N	Y
2	14-161			TRANSFORMER, PROCESSED	1.000	EA	1590		N	Y
		Loc: T1								

Product Structure

Product No: 942-200-60 ASSEMBLY, HIGH VOLTAGE BOARD
Rev: 002 ECN: 1379
Drawing Number:

Item No.	Product Number	DrawingNo.	Siz	Description	Quantity	ECN	Rev	Obs	Act
5	92-5011-2A	Loc: Q1		TRANSISTOR, MJE803	1.000 EA	1590	2	N	Y
8	92-6038-A	Loc: D7		DIODE, LM136H-2.5/883B	1.000 EA	1590	2	N	Y
11	26-8-1	Loc: HV OUT		TERMINAL,INSULATED PC BD-PRESS	1.000 EA	1590	1	N	Y
29	MSB-0085	Loc: F1		WIRE, SOLID, 22 AWG, BARE	.000 FT	1590	1	N	Y
33	88-1	Loc: Q1		HEAT SINK, USE W/PLAS POWR PKG	1.000 EA	1590		N	Y
35	92-7003-1A	PER DWG Loc: HV TEST,GND	B	TEST JACK	2.000 EA	1445	2	N	Y
37	33-140-1	Loc: Q3		SOCKET, 1 CONT-4 COMMON ITEMS	5.000 EA	1590		N	Y
39	5-182	NONE Loc: Q1	PN	SCREW,MACH,PAN HEAD,PHILLIPS,	1.000 EA	1337	1	N	Y
40	5-850	Loc: Q1		NUT, HEX, 4-40, SS, SM	1.000 EA	1590		N	Y
41	5-833	Loc: Q1		WASHER, FLAT, 4, SS	1.000 EA	1590		N	Y
45	64-8	Loc: D7, Q3		SPACER, MOUNTING, 3 LEAD TO-18	2.000 EA	1590	1	N	Y
46	5-296	Loc: T1		SCREW, MACH, PH, 6-32 X .75,	1.000 EA	1590		N	Y
47	VT1			TRAVELLER FOR ASSY & TEST VERI	1.000 EA	1590	2	N	Y

*** END OF REPORT ***

TODAY: 5/30/96
COMPONENT BILL OF MATERIAL
F T: 942-100-35A DESC: HARNESS,POWER SUPPLY TO PCB REV: A
ECN:

ITEM NBR.	PART NUMBER	DESCRIPTION	QUANTITY	ECN
0	36-86	TERM, LUG, CRIMP, 22-16, #6-8 LOC:	6.000 EA	3JR18...
0	67-79-6	CONNECTOR, 6 PIN, CABLE HDR, F LOC:	1.000 EA	3JR18...
0	MSB-0071-2	WIRE, HOOK-UP, 18 GA, BLACK LOC:	.000 FT	3JR18...
0	MSB-0071-3	WIRE, HOOK-UP, 18 GA, RED, TFE LOC:	.000 FT	3JR18....
0	MSB-0071-6	WIRE, HOOK-UP, 18 GA, LT BLUE LOC:	.000 FT	3JR18...
0	MSB-0071-9	WIRE, HOOK-UP, 18 GA, ORANGE LOC:	.000 FT	3JR18....
0	SM-2202	SLEEVE, SPIRAL-WRAP .06"-.5"OD LOC:	.000 FT	3JR18....

8:22:26 300 VICTOREEN, INC. PAGE 1

TODAY: 5/30/96 COMPONENT BILL OF MATERIAL

RT: 942-100-35B DESC: HARNESS,MAIN PCB TO RELAY BOAR REV: B

ECN: 3CR19-90

ITEM NBR.	PART NUMBER	DESCRIPTION	QUANTITY	ECN
1	MSB-0072-3	WIRE, HOOK-UP, 22 AWG, RED LOC:	.330 FT	3CR19-9(
2	MSB-0072-4	WIRE, HOOK-UP, 22 AWG, GREEN LOC:	.330 FT	3CR19-9(
3	MSB-0072-5	WIRE, HOOK-UP, 22 AWG, YELLOW LOC:	.330 FT	3CR19-9(
4	MSB-0072-7	WIRE, HOOK-UP, 22 AWG, BLUE LOC:	.330 FT	3CR19-9(
5	MSB-0072-8	WIRE, HOOK-UP, 22 AWG, BROWN LOC:	.330 FT	3CR19-9(
6	MSB-0072-11	WIRE, HOOK-UP, 22 AWG, VIOLET LOC:	.330 FT	3CR19-9(
7	67-78-6	CONNECTOR, 6 PIN, CABLE HDR, F LOC:	2.000 EA	3CR19-9(

8:22:39 300 VICTOREEN, INC. PAGE 1

TODAY: 5/30/96 COMPONENT BILL OF MATERIAL

RT: 942A-100-35C DESC: HARNESS, MAIN PCB/ANALOG OUT REV: B1

ECN: 9CR5-90

ITEM NBR.	PART NUMBER	DESCRIPTION	QUANTITY	ECN
1	MSB-0072-37	WIRE, HOOK-UP, 22 AWG, YEL/VIO LOC: 5"	.001 FT	9CR5-90
2	MSB-0072-38	WIRE, HOOK-UP, 22 AWG, YEL/WHT LOC: 5"	.001 FT	9CR5-90
3	MSB-0072-39	WIRE, HOOK-UP, 22, YEL/BLK/BRN LOC: 5"	.001 FT	9CR5-90
4	MSB-0072-40	WIRE, HOOK-UP, 22, YEL/BLK/RED LOC: 5"	.001 FT	9CR5-90
5	MSB-0072-41	WIRE, HOOK-UP, 22, YEL/BLK/ORN LOC: 5"	.001 FT	9CR5-90
6	MSB-0072-42	WIRE, HOOK-UP, 22, YEL/BLK/GRN LOC: 5"	.001 FT	9CR5-90
7	MSB-0072-43	WIRE, HOOK-UP, 22, YEL/BLK/BLU LOC: 10"	.001 FT	9CR5-90
8	MSB-0072-44	WIRE, HOOK-UP, 22, YEL/BLK/VIO LOC: 10"	.001 FT	9CR5-90
9	67-78-10	CONNECTOR, 10 PIN CABLE HDR, F LOC:	1.000 EA	6JR1-86
10	67-83-15	INSERT.CONNECTOR.F.24-20 WIRE LOC:	2.000 EA	9CR5-87
11	SM-2202	SLEEVE, SPIRAL-WRAP .06"-.5"OD LOC: 3.5"	1.000 FT	9CR5-87
12	67-99	CONNECTORS, SELF-STRIPPING LOC:	2.000 EA	9CR5-87

VICTOREEN, INC.

TODAY: 5/30/96

COMPONENT BILL OF MATERIAL

RT: 942-100-35D

DESC: HARNESS.DETECTOR POWER SUPPLY

REV: B1

ECN:

ITEM NBR.	PART NUMBER	DESCRIPTION	QUANTITY	ECN
1	MSB-0071-3	WIRE, HOOK-UP, 18 GA, RED, TFE LOC:	.000 FT	11CR13-8
2	MSB-0071-9	WIRE, HOOK-UP, 18 GA, ORANGE LOC:	.000 FT	11CR13-8
3	MSB-0071-2	WIRE, HOOK-UP, 18 GA, BLACK LOC:	.000 FT	11CR13-8
4	SM-2202	SLEEVE, SPIRAL-WRAP .06"-.5"OD LOC:	.000 FT	11CR13-8
5	36-86	TERM, LUG, CRIMP, 22-16, #6-8 LOC:	3.000 EA	11CR13-8
6	67-83-2S	CONNECTOR INSERT,F,18-16 WIRE LOC:	3.000 EA	11CR13-8

8:23:02 300
TODAY: 5/30/96
PT: 942-100-35E

VICTOREEN, INC.
COMPONENT BILL OF MATERIAL
DESC: HARNESS

REV: C
ECN: 10CR10-94

ITEM NBR.	PART NUMBER	DESCRIPTION	QUANTITY	ECN
1	MSB-0072-4	WIRE, HOOK-UP, 22 AWG, GREEN LOC:	.001 FT	5CR13-94
2	MSB-0072-2	WIRE, HOOK-UP, 22 AWG, BLACK LOC:	.001 FT	5CR13-94
3	MSB-0072-1	WIRE, HOOK-UP, 22 GA, WHITE LOC:	.001 FT	5CR13-94
4	67-83-1P	INSERT,CONNECTOR,M,24-20 WIRE LOC:	2.000 EA	5CR13-94
5	67-83-1S	INSERT,CONNECTOR,F,24-20 WIRE LOC:	1.000 EA	5CR13-94
6	36-86	TERM, LUG, CRIMP, 22-16, #6-8 LOC:	3.000 EA	10CR10-94
7	61-3	STRAP,CABLE,7.38",#10 SCREW LOC:	4.000 EA	10CR10-94

15:52:19 300 VICTOREEN, INC. PAGE 1
TODAY: 5/29/96 COMPONENT BILL OF MATERIAL
RT: 948-1 DESC: CHASSIS ASSY, UDR, 3 BAY, 3.5" REV: A
ECN:

ITEM NBR.	PART NUMBER	DESCRIPTION	QUANTITY	ECN
0	948-1-5	ASSY..3 BAY CHASSIS LOC:	1.000 EA	BM 14033...

8:24:06 300
TODAY: 5/30/96
PART: 948A-2-5

VICTOREEN, INC.
COMPONENT BILL OF MATERIAL
DESC: ASSY, BLANK FRONT PANEL

REV: A
ECN:

ITEM NBR.	PART NUMBER	DESCRIPTION	QUANTITY	ECN
1	948A-2-6	PROCESSED BLANK FRONT PANEL LOC:	1.000 EA	6JR1-86
2	842-1-51	FASTENER PAWL LOC:	1.000 EA	6JR1-86
3	948-2-4	BRACKET LOC:	2.000 EA	6JR1-86
4	5-552	USE 5-549 LOC:	4.000 EA	6JR1-86
5	5-838	WASHER, FLAT, 6, SS LOC:	4.000 EA	6JR1-86
6	5-837	WASHER, SPLIT, 6, SS LOC:	4.000 EA	6JR1-86
7	5-853	NUT, HEX, 6-32, SS LOC:	4.000 EA	6JR1-86

8:24:15 300 VICTOREEN, INC. PAGE 1

TODAY: 5/30/96 COMPONENT BILL OF MATERIAL

PART: 948-10 DESC: ADAPTER UDR/RACK CHASSIS REV: A

ECN:

ITEM NBR.	PART NUMBER	DESCRIPTION	QUANTITY	ECN
0	948-10-5	ADAPTER UDR / RACK CHASSIS LOC:	1.000 EA	BM 2JR5-87

Appendix D. - Coaxial Cable Termination Instructions

The procedures/instructions in Appendix D are provided for your reference. Victoreen may purchase BNC connector 30-4 from AMP, Inc. or Amphenol. Before beginning the BNC assembly procedure, verify the connector supplied with your UDR and use the appropriate assembly procedure. The high voltage connector is a Kings MHV connector (Victoreen part number 30-92-1).

Also included in this appendix is the (CPC) assembly procedure.

Document	Description
Amphenol BNC-18	UG Standard BNC Coaxial Connectors Assembly Instructions
Amphenol BNC-19	Improved BNC Coaxial Connectors Assembly Instructions
AMP, Inc. IS 6917	AMP Coaxial 50-Ohm RF Series BNC Connectors Assembly Instructions
AMP, Inc. IS 7593	AMP Circular Plastic Connectors (CPC) Assembly Procedure.
Kings CP-1000	MHV Cabling Procedure

Appendix E. - Supplemental Data (customer specific)

Appendix E contains all technical information pertaining to a specific UDR part number or modification. If the basic UDR was ordered, then this section will not contain any information.

NOTE

If you need additional copies of drawings or other technical information, please contact the Victoreen Customer Service Department at (216) 248-9300 for assistance.

INOVISION Radiation Measurements

Model 848-8A
10 mCi Field Calibrator
Operator's Instruction Manual

Contains Installation, Operation, and Maintenance Service Information for the Model 848-8A 10 mCi Field Calibrator

WARRANTY

This instrument with its accessories is warranted by INOVISION RADIATION MEASUREMENTS, against defects in materials and workmanship for a period of one year from the date of original shipment.

During the warranty period, INOVISION will repair or, at its option, replace, at no charge, an instrument containing such defect, provided that it is returned, transportation prepaid, to the INOVISION repair facility. Instruments repaired in warranty will be returned transportation prepaid within the United States.

In addition, the calibration of each instrument is warranted to be within its specified accuracy at the time of shipment. If an error in this initial calibration is discovered, the instrument will be recalibrated at no charge, provided it is returned as described above. This does not apply to any calibration deviation that may result from normal use.

There are no warranties, expressed or implied, including without limitation any implied warranty of merchantability or fitness, which extend beyond that description on the face hereof. This express warranty excludes coverage of and does not provide relief for incidental or consequential damages of any kind or nature, including but not limited to loss of use, loss of sales or inconvenience. This exclusive remedy of the purchaser is limited to repair, recalibration, or replacement of the instrument at INOVISION'S option.

This warranty does not apply if the product, as determined by INOVISION, is defective because of normal wear or accident or misuse, or as a result of service or modification by other than an authorized INOVISION repair facility. This warranty is void if the unit is subjected to temperatures above 55°C, or contaminated with radioactive material.

INOVISION Radiation Measurements

6045 Cochran Road • Cleveland, Ohio 44139 • U S A • 1-800-850-4608 • 1-440-248-9300 • Fax 1-440-349-2307 • www.inovision.com

Section 1

GENERAL INFORMATION

1.1 INTRODUCTION

WARNING

This device is intended solely to provide a radiation field. It should be used only by persons who have been trained in the proper interpretation of its results and in the appropriate safety procedures to be followed in the presence of radiation.

The Model 848 Field Calibrator is a portable, self-contained fixture for on-site constancy checks of the monitors shown in Table 1-1. A sealed radiation source combined with repeatable location of source and detector in the fixture assures the consistency of the results. The source is encapsulated in welded stainless steel and secured inside a rotating section of the source shield. By rotating the section, one can bring the source to a position where the radiation from the source passes through an exit hole in the shield to irradiate the detector. The rotating section is spring loaded to return to the closed position, and the mechanical interlocks prevent removal of the detector until the rotating section is in the closed position. These safeguards help to minimize the operator's exposure to radiation.

Table 1-1. Monitors

Victoreen Model Number	Description
845 Area Monitoring System	Consists of the Model 846-series Readout and 847-series Ion Chambers
855 Area Monitoring System	Consists of the Model 856-series Readout and 857-series GM Tube Detectors
955 Area Monitoring System	Consists of the Model 956-series Ratemeter and 897-series GM Tube Detectors
Gamma Guard Area Monitoring System	828-series GM Tube Area Monitor
High Pressurized Ion Chamber Area Monitoring System	Consists of the 58-33 High Pressurized Ion Chamber, 977-210-95-M1 Preamplifier and 946-series Ratemeter
945 Area Monitoring System	Consist of the 977-210 or 977-201 Detector/Preamplifier and 946-series Ratemeter

1.2 SPECIFICATIONS

General specifications for the field calibrator are shown in Table 1-2.

Field Calibrator

Table 1-2. Field Calibrator

Dimensions	13 1/4" x 8 7/8" x 6 5/8" (33.6 cm x 22.5 cm x 16.8 cm)
Weight	24 lb. (11 kg)
Source	Nominal 10 mCi of 137 Cs sealed in welded stainless steel capsule (Amersham Model x7)
Source Code	Amersham CDC.705
Radiation Levels - External (Front without detector)	Closed Position <2 mR/h at 1 ft. (0.3 m) Open Position 10 mR/h at 2 ft. (0.61 m) 0.5 mR/h at 10 ft. (3.04 m)
Radiation Levels - Internal (Detector Well)	Closed Position ~5 mR/h* Intermediate Position ~50 mR/h* Open Position ~500 mR/h*
Safety Features	1 Shielding encased in steel and brass 2. Radioactive source mounted in steel 3. Shield spring-loaded closed by redundant helical spring 4. Shield locked in closed position by key lock 5. Interlock prevents locking shield open 6. Key assembly locks detector in place until the shield is closed and locked

*Exact levels are supplied with each field calibrator

Optional Calibration Adapters

1. 848-8-105 — Used with the 857 and 897 series GM detectors.
2. 848-8-400 — Used with the 857 and 897 series stainless steel GM detectors. Must be used with 848-8-105 Adapter.
3. 848-8-808 — Used with the 828 series Gamma Guard Monitor. Must be used with 848-8-105. To order both adapters, use Victoreen model number 848-8-828.
4. 848-8-5830 — Used with 58-33 series High Pressurized Ion Chambers. Must be used with 848-8-105. To order both adapters, use Victoreen model number 848-8-5833.

1.3 EQUIPMENT OVERVIEW

Physical Description

The field calibrator, Model 848-8, consists of a fixed shield section, a cylindrical revolving shield section, a source, a revolving mechanism, a framework, an interlock, and a key lock.

Shield Section

The shield section is a stationary lead shield. The source capsule is located at the center of the shielding when the calibrator is in the closed position. The shape of the shield provides a minimum of 2 inches of 4 Π lead shielding for the source. The shield section is encapsulated in a steel case.

Cylindrical, Revolving Shield Section

The cylindrical revolving shield section is a lead shield that is approximately 2 inches in diameter with the encapsulated source contained in the cylinder wall midway between the end caps. The axis of the cylinder is transverse to the field calibrator body. The cylinder rotates over an angle of 180° with positive stops at each end of the rotation. Return springs hold the cylinder in the rest position and can only be rotated to the open position by applying a torque on the lever located at one end of the cylinder's stub shafts.

Source

The 137Cs source is contained in a hermetically sealed stainless steel capsule. The capsule is contained in a source capsule holder which is solidly mounted to the wall of the cylindrical revolving shield section so that the capsule will not be dislocated from its shielding in the event that the calibrator is exposed to temperatures above the melting point of lead. Access to the source capsule is provided by an access hole through the shield jacket.

Revolving Mechanism

Stub shafts extend through the side walls of the calibrator's framework and along the cylindrical revolving shield section's axis of rotation. A lever is attached to one end of the stub shaft. The lever on the side of the 848-8 gives a visual indication of the source position in the calibrator. It also provides alignment for the source in the "CLOSED", "INTERMEDIATE", or "OPEN" positions.

Housing

The shield section and the revolving mechanism are housed in a steel enclosure, The front end of the enclosure has a circular cut-out used for insertion of the detector. Carrying handles are located at both ends of the calibrator.

Interlock

The interlock is composed of a cam on the key assembly. When the key is turned to the "INTERMEDIATE" or "OPEN" position, the cam prevents removal of the detector. A key guide on the 848-8-105 adapter is utilized.

Key Lock

A key lock is provided to lock the calibrator in the closed position when it is not in use. It can be locked and the key removed only when the source is in the fully closed position. The key should be in the key lock only when the calibrator is being used to perform calibration. An extended key (848-8-3085-1) is provided for use with the Model 977 Series detectors.

1.4 PROCEDURES, WARNINGS, AND CAUTIONS

The equipment described in this manual is intended to be used for the detection and measurement of ionizing radiation. It should be used only by persons who have been trained in the proper interpretation of its readings and the appropriate safety procedures to be followed in the presence of radiation.

Although the equipment described in this manual is designed and manufactured in compliance with all applicable safety standards, certain hazards are inherent in the use of electronic and radiometric equipment.

WARNINGS and CAUTIONS are presented throughout this document to alert the user to potentially hazardous situations. A WARNING is a precautionary message preceding an operation which has the potential to cause personal injury or death. A CAUTION is a precautionary message preceding an operation which has the potential to cause permanent damage to the equipment and/or loss of data. Failure to comply with WARNINGS and CAUTIONS is at the user's own risk and is sufficient cause to terminate the warranty agreement between Inovision Radiation Measurements and the customer.

Adequate warnings are included in this manual and on the product itself to cover hazards that may be encountered in normal use and servicing of this equipment. No other procedures are warranted by Inovision Radiation Measurements. It shall be the owner's or user's responsibility to see to it that the procedures described here are meticulously followed, and especially that WARNINGS and CAUTIONS are heeded. Failure on the part of the owner or user in any way to follow the prescribed procedures shall absolve Inovision Radiation Measurements and its agents from any resulting liability.

Indicated battery and other operational tests must be performed prior to each use to assure that the instrument is functioning properly. If applicable, failure to conduct periodic performance tests in accordance with ANSI N323-1978 (R1983) Radiation Protection Instrumentation Test and Calibration, paragraphs 4.6 and 5.4, and to keep records thereof in accordance with paragraph 4.5 of the same standard, could result in erroneous readings of potential danger. ANSI N323-1978 becomes, by this reference, a part of this operating procedure.

1.5 MANUAL ADDENDA

Any improvements or changes concerning the instrument or manual will be explained in an addenda included with the manual. Be sure to note these changes and incorporate them into the manual.

1.5 CUSTOMER SERVICE/TECHNICAL ASSISTANCE

Should your instrument require service, we request that you consult the Inovision Nuclear Power Systems Department at 1-800-850-4608, Ext. 3643 or 3645, 1-440-542-3643, Fax: 1-440-349-2307, or E-mail: systems@inovision.com.

More information concerning the operation and application of your instrument may be obtained from the applications engineer.

Section 2
OPERATION

2.1 OPERATION

WARNING

Field Calibrator 848-8 contains a radioactive source of approximately 10 millicuries of 137 Cesium. Potential radiation exposure to an operator working with the calibrator in the approved manner is less than 0.1 mR per minute. While this level is well within safety standards for short term exposure, prudence would dictate minimizing exposure as much as possible. In addition, take all necessary precautions to avoid unnecessary radiation of bystanding or passing personnel.

WARNING

Radiation from the open end of the field calibrator is much higher than from the sides and back. The following procedure in which this calibrator is used must be carried out under the supervision of a cognizant radiation safety officer or health physicist.

CAUTION

To avoid spurious alarms, organize and orient the calibrator so that other nearby monitors are not activated by radiation from the open end of the field calibrator.

NOTE

In order to expedite the following procedure, it is wise to determine in advance the present levels of radiation and equivalent readout voltage at OPEN, INTERMEDIATE, and CLOSED positions of the field calibrator. If the detector and readout module are far apart, it may be helpful to have two operators, one at each station, equipped with walkie-talkies, field phones, or other type of rapid communication.

2.2 OPERATION WITH 847 SERIES DETECTORS

(845 Area Monitoring System)

1. Remove the detector from the mounting bracket.
2. For convenience, the field calibrator can be mounted in the detector's mounting bracket by utilizing the bracket key mounted on the side of the field calibrator.
3. Insert the detector into the field calibrator.
4. Turn on the power to the monitoring channel. Allow 15 minutes to warm up.
5. Take a calibration reading of the channel. This is the calibration reading for the **"CLOSED"** position of the field calibrator.

NOTE

Stand behind the calibrator when performing the following steps. The radiation field present during these steps can be hazardous to plant personnel.

6. Insert the key supplied with the field calibrator into the key lock of the same calibrator.
7. Turn the key to the halfway position and rotate the lever on the side of the calibrator until a stop is felt. This is the **"INTERMEDIATE"** position of the calibrator.
8. Take a calibration reading of the channel.
9. Turn the key fully open and turn the lever completely to the open position. This is the **"OPEN"** position of the field calibrator.
10. Take a calibration reading of the channel.
11. Return the lever to the **"CLOSED"** position.
12. Turn the key to lock the calibration fixture. This will also release the detector from the calibrator.
13. Compare the calibration readings with the decay chart provided with the field calibrator. If the chart is unavailable then perform the following equation to determine the expected radiation reading (rate).

$$\text{Current mR/hr} = R \times e^{(-0.693[(t2 - t1)/30])}$$

Where:

R = Original or baseline rate provided with the field calibrator in mR/h.

t2 - t1 = Elapsed time in years between the original rate and the current date.

NOTE

This calculation is based on a 30 year Cesium 137 half-life.

14. A more precise calibration can be made by reading the voltage across the detector/pre-amplifier's output. To obtain this voltage reading, connect a digital volt meter's (DVM) positive lead across resistor 1 (R1) and the negative lead across resistor 2 (R2), located on the main circuit board of the 846 series readout module.
15. Perform Steps 3 through 12 mentioned above.

16. Using the decay curve supplied with the calibrator or the calculated expected reading, perform the equation listed below. This equation will enable the operator to determine the desired detector/pre-amplifier output voltage for a given dose rate.

$$V = n + (0.111)\rho$$

Where:

V = The detector/pre-amplifier output in volts.

$\rho = R/10^{n-1}$

R = Radiation dose rate in mR/h.

n = Numerical order of the decade.

For example:

0.1 to 0.999 mR/h	=	Zero decade	= 0
1 to 9.99 mR/h	=	1 st decade	= 1
10 to 99.9 mR/h	=	2 nd decade	= 2
100 to 999.9 mR/h	=	3 rd decade	= 3
1,000 to 9,999.9 mR/h	=	4 th decade	= 4
10,000 to 99,999.9 mR/h	=	5 th decade	= 5
10^5 to 999,999 mR/h	=	6 th decade	= 6
10^6 to 9,999,999 mR/h	=	7 th decade	= 7

NOTE

The above equation is only valid for dose rates above 0.1 mR/h.

17. The readings taken in Step 15 should correspond to the calculated reading.
18. Remove the detector from the calibrator.
19. If the detector wall mounting was used to support the calibrator, remove the calibrator from the mounting.
20. Store the calibrator in a shielded area. This area should be labeled as storing radioactive material.
21. If the detector channel has met all the criteria set forth then return the channel to operation. If the detector has not passed the criteria set forth then return the unit to Inovision Radiation Measurements for servicing.

2.3 OPERATION WITH 857 SERIES DETECTORS

(855 Area Monitoring System)

1. Remove the detector from the mounting bracket.
2. For convenience, the field calibrator can be mounted in the detector's mounting bracket by utilizing the bracket key mounted on the side of the field calibrator.
3. Insert the field calibrator detector adapter model number 848-8-105 or model number 848-8-400 into the field calibrator.
4. Insert the detector into the field calibrator detector adapter.
5. Turn on the power to the monitoring channel. Allow 15 minutes to warm up.
6. Take a calibration reading of the channel. This is the calibration reading for the **"CLOSED"** position of the field calibrator.

NOTE

Stand behind the calibrator when performing the following steps. The radiation field present during these steps can be hazardous to plant personnel.

7. Insert the key supplied with the field calibrator into the key lock of the same calibrator.
8. Turn the key to the halfway position and rotate the lever on the side of the calibrator until a stop is felt. This is the **"INTERMEDIATE"** position of the calibrator.
9. Take a calibration reading of the channel.
10. Turn the key fully open and turn the lever completely to the open position. This is the **"OPEN"** position of the field calibrator.
11. Take a calibration reading of the channel.
12. Return the lever to the **"CLOSED"** position.
13. Turn the key to lock the calibration fixture. This will also release the detector from the calibrator.
14. Compare the calibration readings with the decay chart provided with the field calibrator. If the chart is unavailable then perform the following equation to determine the expected radiation reading (rate).

$$\text{Current mR/hr} = R \times e^{(-0.693[(t2 - t1)/30])}$$

Where:

R = Original or baseline rate provided with the field calibrator in mR/h.

t2 - t1 = Elapsed time in years between the original rate and the current date.

NOTE

This calculation is based on a 30 year Cesium 137 half-life.

15. A more precise calibration can be made by reading the voltage across the computer output of the readout module. To obtain this voltage reading, connect a digital voltmeter (DVM) leads to the computer output of the 856 readout module.
16. Perform Steps 3 through 13 mentioned above.
17. Using the decay curve supplied with the calibrator or the calculated expected reading, perform the equation listed below. This equation will enable the operator to determine the desired detector output voltage for a given dose rate.

$$V = A(\log_{10} R) + B$$

Where:

V = The computer output in volts.

A = 0.01 for a 0 to 50 mV computer output voltage span.
0.2 for a 0 to 1.0 V computer output voltage span.
1.0 for a 0 to 5.0 V computer output voltage span

R = Radiation dose rate in mR/h.

B = 2.0 for detector series 857-10 and 897-210.
1.0 for detector series 857-20 and 897-220.
0 for detector series 857-30 and 897-230.

18. The readings taken in Step 16 should correspond to the calculated reading.
19. Remove the detector from the adapter.
20. Remove the adapter from the calibrator.
21. If the detector wall mounting was used to support the calibrator, remove the calibrator from the mounting.
22. Store the calibrator in a shielded area. This area should be labeled as storing radioactive material.
23. If the detector channel has met all the criteria set forth then return the channel to operation. If the detector has not passed the criteria set forth then return the unit to Inovision Radiation Measurements for servicing.

2.4 OPERATION WITH 897 SERIES DETECTORS

(955 Area Monitoring System)

1. Remove the detector from the mounting bracket.
2. For convenience, the field calibrator can be mounted in the detector's mounting bracket by utilizing the bracket key mounted on the side of the field calibrator.
3. Insert the field calibrator detector adapter model number 848-8-105 or model number 848-8-400 into the field calibrator.
4. Insert the detector into the field calibrator detector adapter.
5. Turn on the power to the monitoring channel. Allow 15 minutes to warm up.
6. Take a calibration reading of the channel. This is the calibration reading for the **"CLOSED"** position of the field calibrator.

NOTE

Stand behind the calibrator when performing the following steps. The radiation field present during these steps can be hazardous to plant personnel.

7. Insert the key supplied with the field calibrator into the key lock of the same calibrator.
8. Turn the key to the halfway position and rotate the lever on the side of the calibrator until a stop is felt. This is the **"INTERMEDIATE"** position of the calibrator.
9. Take a calibration reading of the channel.
10. Turn the key fully open and turn the lever completely to the open position. This is the **"OPEN"** position of the field calibrator.
11. Take a calibration reading of the channel.
12. Return the lever to the **"CLOSED"** position.
13. Turn the key to lock the calibration fixture. This will also release the detector from the calibrator.
14. Compare the calibration readings with the decay chart provided with the field calibrator. If the chart is unavailable then perform the following equation to determine the expected radiation reading (rate).

$$\text{Current mR/hr} = R \times e^{(-0.693[(t2 - t1)/30])}$$

Where:

R = Original or baseline rate provided with the field calibrator in mR/h.
t2 - t1 = Elapsed time in years between the original rate and the current date.

NOTE

This calculation is based on a 30 year Cesium 137 half-life.

15. Remove the detector from the adapter.
16. Remove the adapter from the calibrator.
17. If the detector wall mounting was used to support the calibrator, remove the calibrator from the mounting.
18. Store the calibrator in a shielded area. This area should be labeled as storing radioactive material.
19. If the detector channel has met all the criteria set forth then return the channel to operation. If the detector has not passed the criteria set forth then return the unit to Inovision Radiation Measurements for servicing.

2.5 OPERATION WITH 977 SERIES DETECTORS

(945 Area Monitoring System)

1. Remove the detector from the mounting bracket.
2. Insert the detector into the field calibrator detector adapter.
3. Turn on the power to the monitoring channel. Allow 15 minutes to warm up.
4. Take a calibration reading of the channel. This is the calibration reading for the **"CLOSED"** position of the field calibrator.

NOTE

Stand behind the calibrator when performing the following steps. The radiation field present during these steps can be hazardous to plant personnel.

5. Insert the key supplied with the field calibrator into the key lock of the same calibrator.
6. Turn the key to the halfway position and rotate the lever on the side of the calibrator until a stop is felt. This is the **"INTERMEDIATE"** position of the calibrator.
7. Take a calibration reading of the channel.
8. Turn the key fully open and turn the lever completely to the open position. This is the **"OPEN"** position of the field calibrator.

9) Take a calibration reading of the channel.

10. Return the lever to the **"CLOSED"** position.
11. Turn the key to lock the calibration fixture. This will also release the detector from the calibrator.
12. Compare the calibration readings with the decay chart provided with the field calibrator. If the chart is unavailable then perform the following equation to determine the expected radiation reading (rate).

$$\text{Current mR/hr} = R \times e^{(-0.693[(t2 - t1)/30])}$$

Where:

R = Original or baseline rate provided with the field calibrator in mR/h.

t2 - t1 = Elapsed time in years between the original rate and the current date.

NOTE

This calculation is based on a 30 year Cesium 137 half-life.

13. Remove the detector from the calibrator.
14. Store the calibrator in a shielded area. This area should be labeled as storing radioactive material.
15. If the detector channel has met all the criteria set forth then return the channel to operation. If the detector has not passed the criteria set forth then return the unit to Inovision Radiation Measurements for servicing.

2.6 OPERATION WITH 828 SERIES DETECTORS

(Gamma Guard Area Monitoring System)

1. Remove the detector from its mounting bracket.
2. Insert the field calibrator detector adapter model number 848-8-105.
3. Insert the field calibrator detector adapter model number 848-8-808 into adapter model number 848-8-105.
4. Insert the detector into the field calibrator detector adapters.
5. Turn on the power to the monitoring channel. Allow 15 minutes to warm up.
6. Take a calibration reading of the channel. This is the calibration reading for the **"CLOSED"** position of the field calibrator.

NOTE

Stand behind the calibrator when performing the following steps. The radiation field present during these steps can be hazardous to plant personnel.

7. Insert the key supplied with the field calibrator into the key lock of the same calibrator.
8. Turn the key to the halfway position and rotate the lever on the side of the calibrator until a stop is felt. This is the **"INTERMEDIATE"** position of the calibrator.
9. Take a calibration reading of the channel.
10. Turn the key fully open and turn the lever completely to the open position. This is the **"OPEN"** position of the field calibrator.
11. Take a calibration reading of the channel.
12. Return the lever to the **"CLOSED"** position.
13. Turn the key to lock the calibration fixture.
14. Compare the calibration readings with the decay chart provided with the field calibrator. If the chart is unavailable then perform the following equation to determine the expected radiation reading (rate).

$$\text{Current mR/hr} = R \times e^{(-0.693[(t2 - t1)/30])}$$

Where:

R = Original or baseline rate provided with the field calibrator in mR/h.

t2 - t1 = Elapsed time in years between the original rate and the current date.

NOTE

This calculation is based on a 30 year Cesium 137 half-life.

15. Remove the detector from the adapters.
16. Remove the adapters from the calibrator.
17. Store the calibrator in a shielded area. This area should be labeled as storing radioactive material.
18. If the detector channel has met all the criteria set forth then return the channel to operation. If the detector has not passed the criteria set forth then return the unit to Inovision Radiation Measurements for servicing.

Model 848-8A
10 mCi Field Calibrator
Instruction Manual

Manual No. 848-8A-1
Rev. 1 17 MAY 01

CONTENTS

Section 1: **GENERAL INFORMATION** **1-1**

1.1 Introduction 1-1
1.2 Specifications 1-2
1.3 Equipment Overview 1-3
1.4 Procedures, Warnings, and Cautions 1-4
1.5 Manual Addenda 1-4
1.6 Customer Service/Technical Assistance 1-4

Section 2: **OPERATION** **2-1**

2.1 Operation 2-1
2.2 Operation with 847 Series Detectors 2-2
2.3 Operation with 857 Series Detectors 2-4
2.4 Operation with 897 Series Detectors 2-6
2.5 Operation with 977 Series Detectors 2-7
2.6 Operation with 828 Series Detectors 2-8
2.7 Operation with 58-33 Series Detectors 2-9

Section 3: **MAINTENANCE** **3-1**

3.1 Maintenance 3-1

APPENDIX A

A-1 Applicable Drawings A-1

APPENDIX B

B-1 Bill of Materials B-1

2.7 OPERATION WITH 58-33 SERIES DETECTORS

(High Pressurized Ion Chamber Area Monitoring System)

1. Remove the detector from its mounting bracket.
2. Insert the field calibrator detector adapter model number 848-8-105.
3. Insert the field calibrator detector adapter model number 848-8-5833 into adapter model number 848-8-105.
4. Insert the detector into the field calibrator detector adapters.
5. Turn on the power to the monitoring channel. Allow 15 minutes to warm up.
6. Take a calibration reading of the channel. This is the calibration reading for the "CLOSED" position of the field calibrator.

NOTE

Stand behind the calibrator when performing the following steps. The radiation field present during these steps can be hazardous to plant personnel.

7. Insert the key supplied with the field calibrator into the key lock of the same calibrator.
8. Turn the key to the halfway position and rotate the lever on the side of the calibrator until a stop is felt. This is the "INTERMEDIATE" position of the calibrator.
9. Take a calibration reading of the channel.
10. Turn the key fully open and turn the lever completely to the open position. This is the "OPEN" position of the field calibrator.
11. Take a calibration reading of the channel.
12. Return the lever to the "CLOSED" position.
13. Turn the key to lock the calibration fixture.
14. Compare the calibration readings with the decay chart provided with the field calibrator. If the chart is unavailable then perform the following equation to determine the expected radiation reading (rate).

$$\text{Current mR/hr} = R \times e^{(-0.693[(t2 - t1)/30])}$$

Where:

R = Original or baseline rate provided with the field calibrator in mR/h.

t2 - t1 = Elapsed time in years between the original rate and the current date.

NOTE

This calculation is based on a 30 year Cesium 137 half-life.

15. Remove the detector from the adapters.
16. Remove the adapters from the calibrator.
17. Store the calibrator in a shielded area. This area should be labeled as storing radioactive material.
18. If the detector channel has met all the criteria set forth then return the channel to operation. If the detector has not passed the criteria set forth then return the unit to Inovision Radiation Measurements for servicing.

Section 3
MAINTENANCE

3.1 MAINTENANCE

The Model 848-8 Field Calibrator is virtually trouble free, and requires almost no field maintenance. To guard against leaks of radioactive material, the NRC generally requires source wipe tests at intervals not to exceed six months.

WARNING

The wipe test of the source is made with the calibrator in the open position. Extreme care must be taken when performing the wipe test of the source because the parts of the body that are in front of the window during the wipe test are exposed to the full measure of radiation from the source. Do the test quickly, and get no more of the body in front of the window than necessary to complete the wipe. Close the calibrator as soon as possible.

Wipe Test Procedure

1. Procure a long handled Q-tip type cotton swab and moisten it in alcohol or water.
2. Insert the key and turn it to allow the handle to be moved to the open position.
3. Move the lever to the open position and quickly swab the surface of the source through the exit hole.
4. Move the lever to the closed position as soon as possible.
5. Turn and remove the key.
6. Expose the swab to a suitable detection system for determination of the swab's contamination level.

Similar wipe tests should be made at each bearing of the shaft on which the rotating section of the shield turns. Access to these bearings is from the underside of the fixture.

Appendix A

APPLICABLE DRAWINGS

A-1 APPLICABLE DRAWINGS

Document Number	Description
GEL848-8	Dimensional Outline
848-8-5	Assembly Drawing
848-8-105	Assembly Drawing
848-8-808	Assembly Drawing
848-8-5830	Assembly Drawing
848-8-400	Assembly Drawing

GEL 848-8

ITEM	PART NO	QUAN	DESCRIPTION

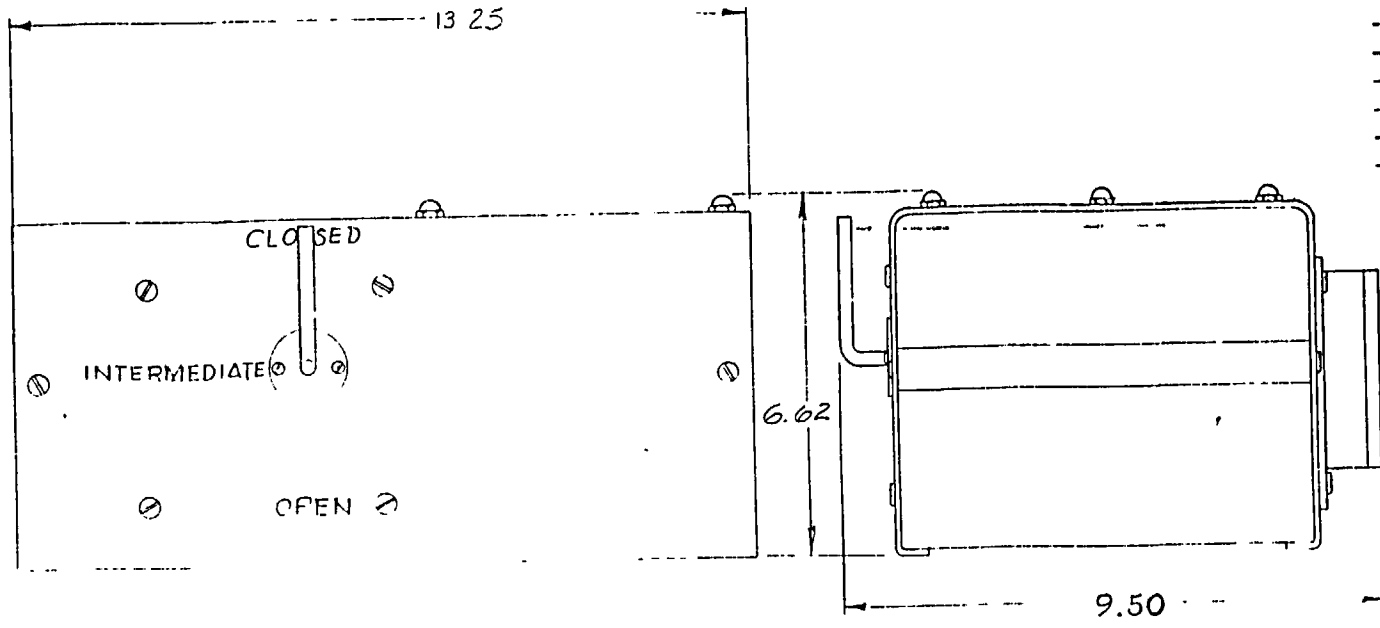

REVISIONS

REV LET	DESCRIPTION	DATE
	EN013903	
A	REVISED PER ORIGS 99	7/1/93

UNLESS OTHERWISE SPECIFIED DIMENSIONS ARE IN INCHES
TOLERANCES
FRACTIONAL DIMENSIONS ± 015
DECIMAL DIMENSIONS
XX = ± 015 - XXX = ± 005
ANGLES
ALL OTHER TOLERANCES PER VICTOREEN DWG NO 901775

NEXT ASS'Y	USED ON
APPLICATION	

GEL 848-8

VICTOREEN INSTRUMENT DIVISION
10101 WOODLAND AVE., CLEVELAND OHIO 44104

NAME DIMENSIONAL OUTLINE
FIELD CALIBRATOR

MATERIAL	FINISH
—	—

DRAWN	DATE	CHECKED	DATE	APP'D	DATE
[illegible]	7/19/[illegible]	[illegible]		[illegible]	

SIZE	CODE IDENT	DWG NO
B	63060	GEL 848-8

SCALE 1/2" = 1" SHEET 1 OF 1

1. ALL DIMENSIONS ARE APPROXIMATE!

NOTES: UNLESS OTHERWISE SPECIFIED

848-8-5 | 1 | 11

REV	DESCRIPTION	DATE	PREPARED
11	REVISED PER DCR 9CR32-98	11-9-98	WI

NOTES

1. CALIBRATION METER (MODEL #848-8-55) IS AVAILABLE AS A SPECIAL OPTION
2. CALIBRATOR INCLUDES (1) SPARE KEY ASSEMBLY ATTACH SPARE KEY (IN POLY BAG) TO CALIBRATOR HANDLE
3. INSTALL WALL BRACKET ONTO PLATE BEFORE MOUNTING PLATE ONTO CALIBRATOR BODY (SMALLER DISTANCE ON TOP AS SHOWN)
4. LOCK MECHANISM ALIGNMENT AS SHOWN WITH SLOT PERPENDICULAR TO RIGHT SIDE OF CALIBRATOR BODY
5. RADIOACTIVE SOURCE CAPSULE IS NOT INCLUDED WITH THIS ASSEMBLY SOURCE IS INSTALLED AT TIME OF CALIBRATION OF 848-8 BY RADIATION SAFETY OFFICER

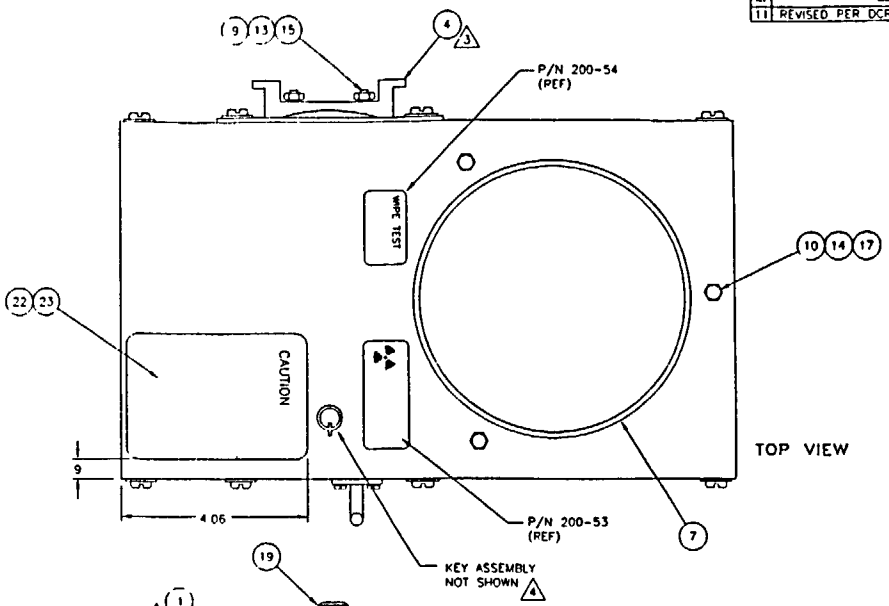

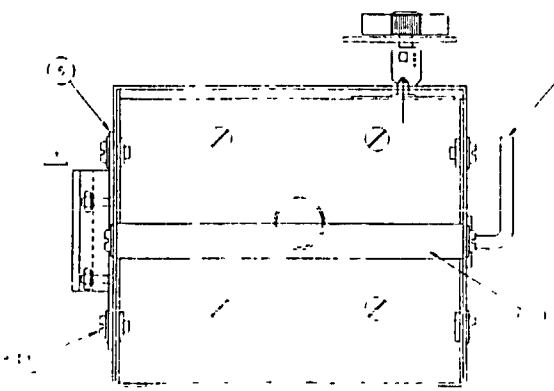

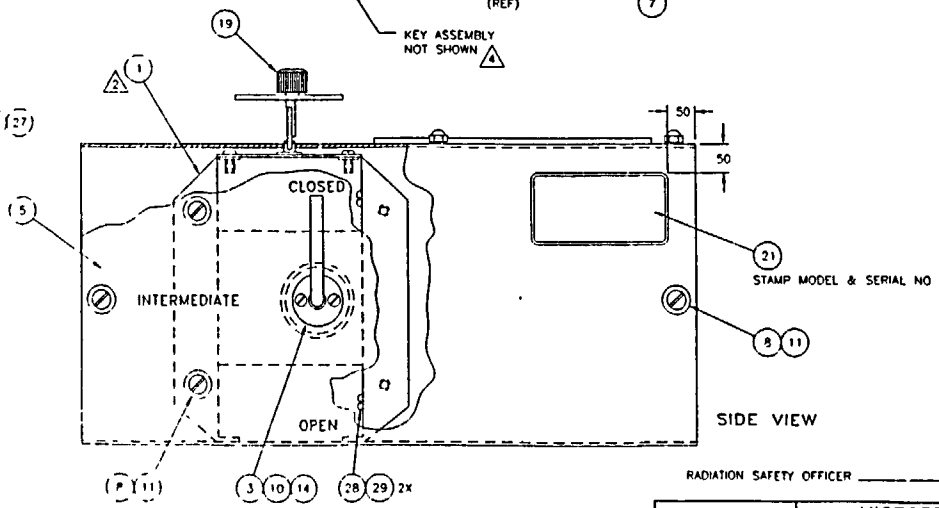

RADIATION SAFETY OFFICER _____

UNLESS OTHERWISE SPECIFIED DIMENSIONS ARE IN INCHES TOLERANCES ARE
DECIMALS .XX ± .015 .XXX ± .005 ANGLES ± 1 DEG FINISH 125
REMOVE ALL BURRS & BREAK SHARP EDGES .005 TO .015

COMPUTER GENERATED DRAWING
S-374 | 8-5
MATERIAL
FINISH

NEXT ASSEMBLY USED ON
DRAWN bh 2-26-96
CHECKED AGA
PROJ ENG
APPROVED VA

VICTOREEN, INC.
6000 COCHRAN RD., SOLON, OHIO 44139
TITLE
FIELD CALIBRATOR

D 63060 | 848-8-5 | 11
SCALE n/a | DO NOT SCALE | SHEET 1 OF 1

848-8-105

LTR	ECO NO.	APPROVED	DATE
4	2004	Original Signed By R. Smith	6/8/01

NOTES

1

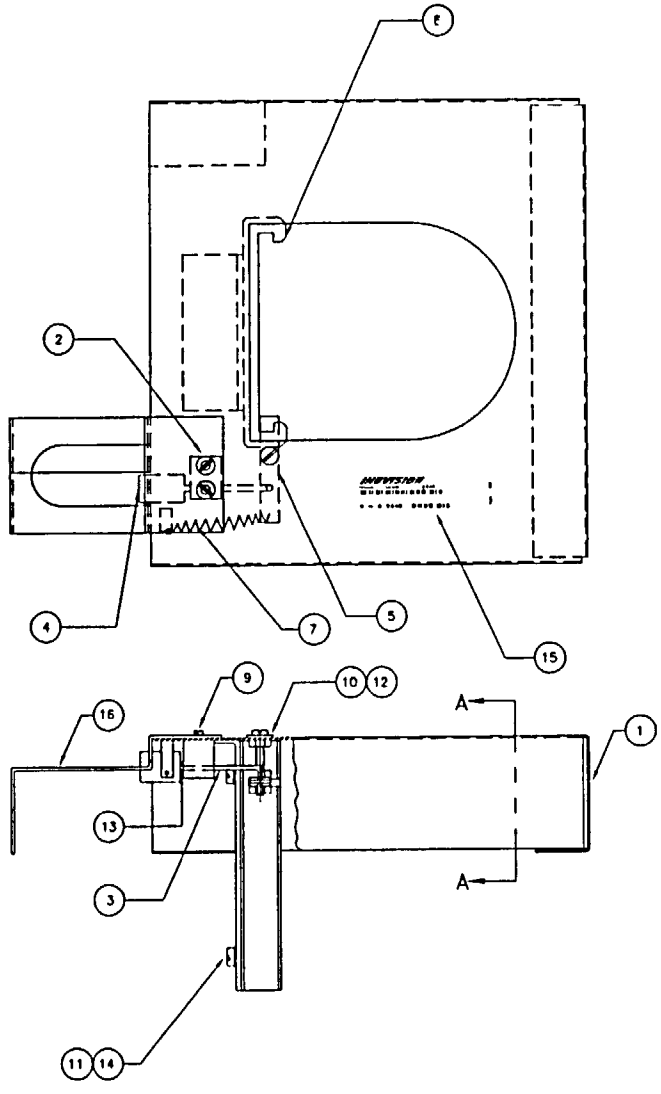

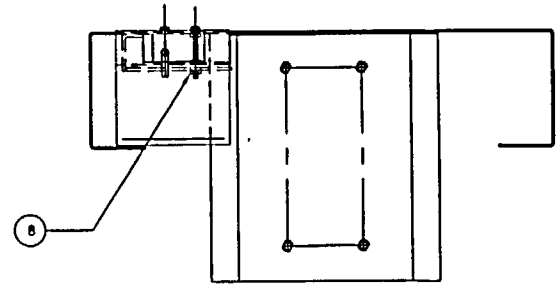

SECTION A–A

UNLESS OTHERWISE SPECIFIED DIMENSIONS ARE IN INCHES TOLERANCES ARE:
DECIMALS: .XX±.010 .XXX±.005
ANGLES: ±1° FINISH: 63
FRACTIONS: ±1/32
REMOVE ALL BURRS & BREAK SHARP EDGES .005 TO .015

DRAWN BY	Original Signed S. Frank	05/23/01
ENGINEER	Original Signed D. Wenner	6/8/01
DESIGNER	Original Signed F. Kiel	6/8/01
QA	Original Signed S. Frank	6/8/01

INOVISION RADIATION MEASUREMENTS 6046 COCHRAN ROAD SOLON, OHIO 44139

TITLE
ASSEMBLY
FIELD CALIBRATION ADAPTER

SIZE	CAGE NO.	DWG NO.	REV
D	1JZH3	848-8-105	4

SCALE 1/1 DO NOT SCALE SHEET 1 OF 1

THIS DRAWING IS THE PROPERTY OF VICTOREEN INCORPORATED. NEITHER THE ORIGINAL NOR REPRODUCTIONS OF IT, NOR INFORMATION DERIVED FROM IT IS TO BE SHOWN TO OTHERS, NOR USE IS TO BE MADE OF IT WHICH IS, OR MAY BE, DETRIMENTAL TO VICTOREEN INCORPORATED.

REV	DESCRIPTION	DATE	PREPARED
B	REV PER DCR 9CR21-96	8-07-96	bh

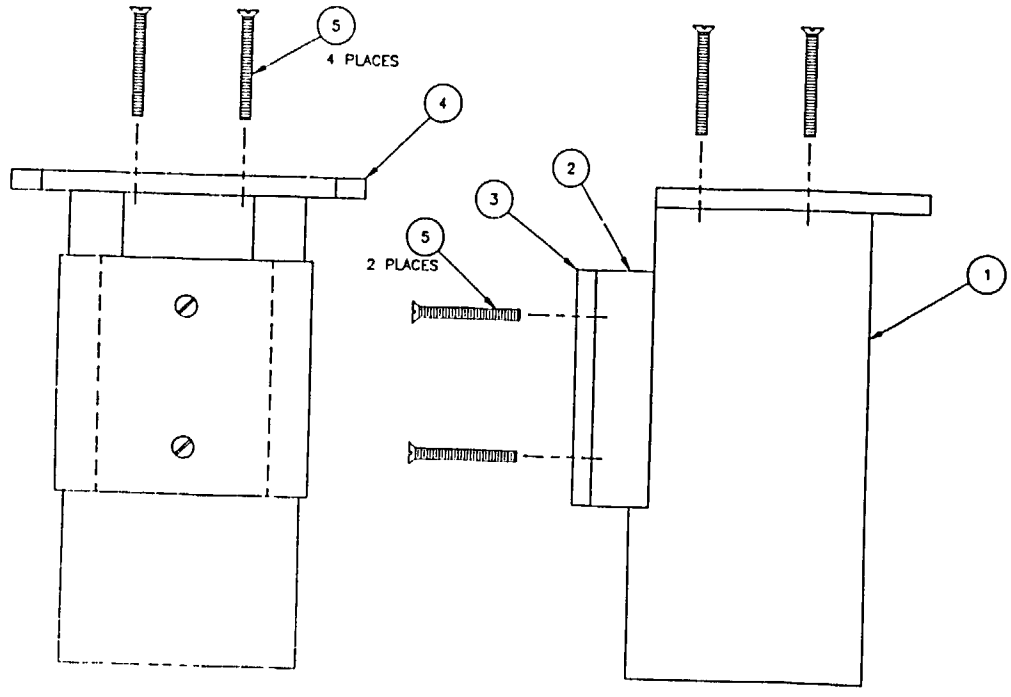

DWG NO 848-8-808 SH 1 REV B

UNLESS OTHERWISE SPECIFIED DIMENSIONS ARE IN INCHES TOLERANCES ARE

DECIMALS	ANGLES	FINISH
XX=± .015	± 1 DEG	125
XXX=± .005	±	

REMOVE ALL BURRS & BREAK SHARP EDGES .005 TO .015

NEXT ASSEMBLY USED ON

MATERIAL

FINISH

COMPUTER GENERATED DRAWING
ALL CHANGES MUST BE MADE TO COMPUTER DATA BASE AUTOCAD RELEASE 10

DWG NO	FILE NAME
S-381	808

ORIGINATOR	bh	8-07-96
CHECKED	ARA	8 12 96
PROJ ENG		8 13-96
APPROVED	N/A	
BY DATE		8-28-96

VICTOREEN, INC.
6000 COCHRAN RD. SOLON, OHIO 44139

TITLE
ASSEMBLY
GAMMA GUARD ADAPTER

SIZE	CODE NO	DWG NO	REV
C	63060	848-8-808	B

SCALE 1/1 DO NOT SCALE SHEET 1 OF 1

THIS DRAWING IS THE PROPERTY OF VICTOREEN INCORPORATED. NEITHER THE DRAWING, NOR REPRODUCTIONS OF IT, NOR INFORMATION DERIVED FROM IT IS TO BE GIVEN TO OTHERS, NO USE IS TO BE MADE OF IT WHICH IS, OR MAY BE INJURIOUS TO VICTOREEN INCORPORATED.

REVISIONS			
REV	DESCRIPTION	DATE	PREPARED
A	ORIGINAL ISSUE 9JR2-96	9-04-96	bh

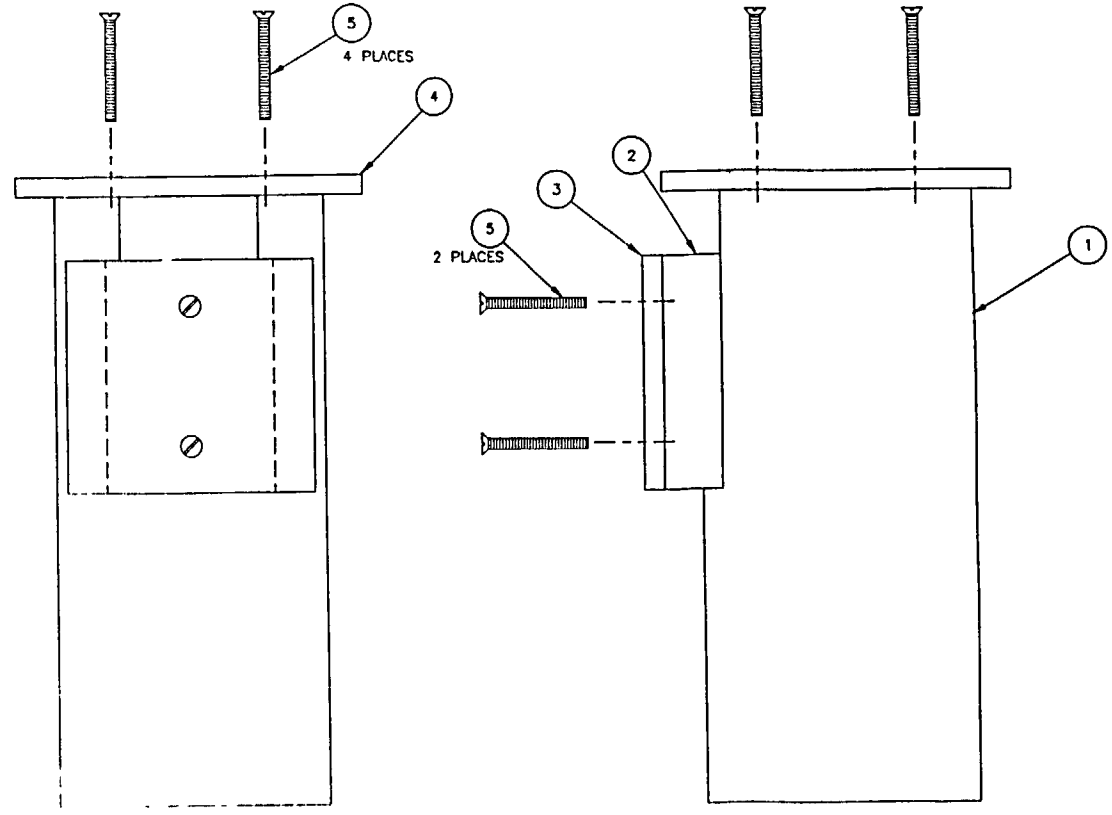

DWG NO 848-8-5830 SH 1 REV A

COMPUTER GENERATED DRAWING ALL CHANGES MUST BE MADE TO COMPUTER DATA BASE AUTOCAD RELEASE 10		UNLESS OTHERWISE SPECIFIED DIMENSIONS ARE IN INCHES TOLERANCES ARE	NEXT ASSEMBLY USED ON	ORIGINATOR bh 9-04-96	VICTOREEN, INC. 6000 COCHRAN RD., SOLON, OHIO 44139
DWG NO S-383	FILE NAME 5830	DECIMALS ANGLES FINISH	MATERIAL	CHECKED N/A	TITLE ASSEMBLY - HIGH PRESSURIZED ION CHAMBER ADAPTER
		XX=± .015 ±1 DEG 125		PROJ ENG 9/12/96	
		XXX=± .005 ±	FINISH	APPROVED N/A	SIZE C CAGE NO 63060 DWG NO 848-8-5830 REV A
		REMOVE ALL BURRS & BREAK SHARP EDGES .005 TO .015		DR 9/26/96	SCALE 1/1 DO NOT SCALE SHEET 1 OF 1

848-8-400

ITEM	PART NO	QUAN.	DESCRIPTION
1	848-8-4002	1	ADAPTER W/SS FLANGE
2	848-8-3072	1	GUIDE
3	5-497	2	SCREW F.H. 1/4-20 5/16

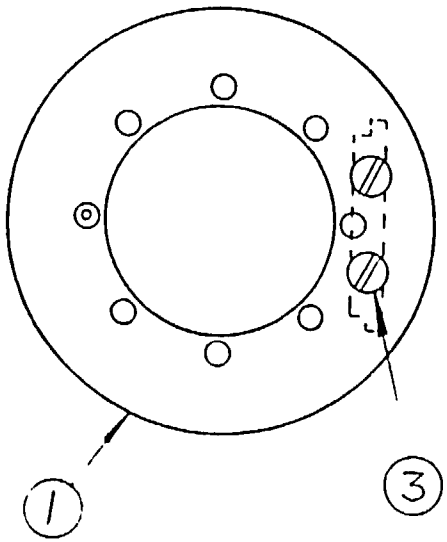

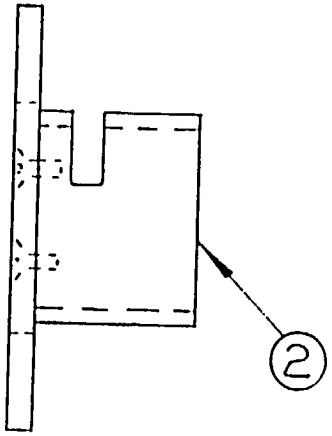

UNLESS OTHERWISE SPECIFIED DIMENSIONS ARE IN INCHES

TOLERANCES
FRACTIONAL DIMENSIONS - 015
DECIMAL DIMENSIONS:
XX = ± 015 - XXX = ± 005
ANGLES
ALL OTHER TOLERANCES PER VICTOREEN DWG NO 901775

NEXT ASS'Y	USED ON
	E 207017

APPLICATION

NOTES: UNLESS OTHERWISE SPECIFIED

REVISIONS

REV LET	DESCRIPTION	DATE
	RELEASED FOR PRODUCTION FCO 15212	4/7/81

VICTOREEN, INC.
10101 WOODLAND AVE., CLEVELAND, OHIO 44104

NAME ADAPTER W/ S.S. FLANGE ASS'Y.

MATERIAL	FINISH
CS	CS

DRAWN	DATE	CHECKED	DATE	APP'D	DATE
EAS	4/7/81				

SIZE	CODE IDENT	DWG NO
A	63060	848-8-400

SCALE 1/1 SHEET 1 OF 1

Appendix B
BILL OF MATERIALS

B.1 BILL OF MATERIALS

Document Number	Description
848-8A	Bill of Materials, Field Calibrator Assembly
848-8-5	Bill of Materials, Field Calibrator Assembly
848-8-105	Bill of Materials, Field Calibration Adapter Assembly
848-8-828	Bill of Materials, Field Calibrator Assembly
848-8-808	Bill of Materials, Gamma Guard Adapter Assembly
848-8-5833	Bill of Materials, Adapter, Field Calibrator
848-8-5830	Bill of Materials, Assembly, High Pressure Ion Chamber
848-8-400	Bill of Materials, Adapter w /S.S. Flange Assembly

Product Structure

Product No: 848-8A 10 MCI, FIELD CALIBRATOR
Rev: 002 ECN: 2035
Drawing Number: PER BM

Item No.	Product Number	DrawingNo.	Siz	Description	Quantity			ECN	Rev	Obs	Act
	200-53			LABEL,CAUTION	1.000	EA		1590		N	Y
	200-122	200-122	A	"WIPE TEST" LABEL	1.000	EA		1599	2	N	Y
	843-6-26			WALL SUPPORT, DETECTOR	1.000	EA		9CR34-98	2	N	Y
	848-8C-35			SOURCE 10 MILLICURIE CS-137	1.000	EA		1590	6	N	Y
	848-8-5			FIELD CALIBRATOR ASSEMBLY,LESS	1.000	EA	PS	9CR32-98	11	N	Y
	848-8A-1	PER IM	IM	MODEL 848-8A 10 MCI FIELD	.001	EA		2035	1	N	Y

*** END OF REPORT ***

Product Structure

Product No: 848-8-5 FIELD CALIBRATOR ASSEMBLY,LESS
Rev: 011 ECN: 9CR32-98
Drawing Number:

Item No.	Product Number	DrawingNo.	Siz	Description	Quantity			ECN	Rev	Obs	Act
1	848-8-6			CALIBRATOR ASSY (SA)	1.000	EA	PS	1CR103-93	5	N	Y
2	848-8-8			HANDLE	2.000	EA		1590	1	N	Y
3	848-8-501			PLATE,HANDLE MOUNTING	1.000	EA		1590	2	N	Y
4	843-6-25			MOUNTING SLIDE	1.000	EA		1590	24	N	Y
5	848-8-9			CASE,FIELD CALIBRATOR	1.000	EA		1590	5	N	Y
6	848-8-10			PLATE,WALL MOUNTING	1.000	EA		1590		N	Y
7	51-26			STRIP, GROMMET, 18-12 AWG	2.000	FT		1590	1	N	Y
8	5-439			SCREW, MACH, PH, 10-32 X .62,	12.000	EA		1590		N	Y
9	5-448			SCREW, MACH, FH, 10-32 X .88,	2.000	EA		1590		N	Y
10	5-259			SCREW, MACH, PH, 6-32 X .19,	5.000	EA		1590		N	Y
11	5-716			WASHER, FLAT, 10, NY, BO	12.000	EA		1590		N	Y
13	5-795			WASHER, SPLIT, 10, SS	2.000	EA		1590		N	Y
14	5-837			WASHER, SPLIT, 6, SS	5.000	EA		1590		N	Y
15	5-857			NUT, HEX, 10-32, SS	2.000	EA		1590		N	Y
17	848-8-3087			ACORN CAP NUT,6-32,.290 MAX HT	3.000	EA		1590	1	N	Y
18	848-8-41			HANDLE	1.000	EA		1590		N	Y
19	848-8-3085			KEY ASSY.	1.000	EA	PS	5CR28-89	2	N	Y
21	200-135	200-135	B	NAME TAG	1.000	EA	PS	1840	6	N	Y
22	MSJ-4329			SOLVENT, ADHESIVE	.001	GA		1590		N	Y
23	848-8-37			DECAL,CAUTION PROCESSED	1.000	EA		9CR34-98		N	Y
27	38-18			RING, RETAINING, E-RING, EXT	1.000	EA		1590		N	Y
28	5-1090			SCREW, MACH., PH, 6-32 X .25	2.000	EA		1590	1	N	Y
29	5-867			NUT, HEX, 6-32, NY, BO	2.000	EA		1590		N	Y
30	848-8-3085-1			KEY ASSEMBLY - 977 APPLICATION	1.000	EA	PS	9CR32-98	1	N	Y

*** END OF REPORT ***

Product Structure

Product No: 848-8-105 ASSEMBLY FIELD CALIBRATION
Rev: 004 ECN: 2004
Drawing Number: 848-8-105

Item No.	Product Number	DrawingNo.	Siz	Description	Quantity			ECN	Rev	Obs	Act
1	848-8-106			ADAPTER HOUSING	1.000	EA		1590		N	Y
2	848-8-108			GUIDE BLOCK, PROCESSED	1.000	EA		1590		N	Y
3	848-8-109			ACTUATOR ARM	1.000	EA		1590		N	Y
4	848-8-112			CAM FOLLOWER	1.000	EA		1590		N	Y
5	848-8-113			LOCK BAR	1.000	EA		1590	1	N	Y
6	848-8-114			SUPPORT,DETECTOR	1.000	EA		1590		N	Y
7	12-36	NONE	PN	EXTENTION SPRING .1880D/.72LG	1.000	EA		1759	2	N	Y
8	43-1			WASHER, EXTRUDED, .141ID/.250D	2.000	EA		1590		N	Y
9	5-261			SCREW, MACH, PH, 6-32 X .25,	2.000	EA		1590		N	Y
10	5-297			SCREW, MACH, BH, 6-32 X .88,	1.000	EA		1590		N	Y
11	5-352			SCREW, MACH, PH, 8-32 X .31,	4.000	EA		1590		N	Y
12	5-852			NUT, HEX, 6-32, SS, SM	3.000	EA		1590		N	Y
13	5-848	NONE	PN	NUT, HEX, 2-56, SS	1.000	EA		1419	1	N	Y
14	5-767			WASHER, INT, 8, S, CP	4.000	EA		1590		N	Y
15	200-135	200-135	B	NAME TAG	1.000	EA	PS	1840	6	N	Y
16	848-8-3086			KEY GUIDE ASS'Y	1.000	EA		1590	1	N	Y

*** END OF REPORT ***

Product Structure

Product No: 848-8-828 ADAPTER, FIELD CALIBRATOR
Rev: 001 ECN: 9CR21-96
Drawing Number:

Item No.	Product Number	DrawingNo.	Siz	Description	Quantity			ECN	Rev	Obs	Act
1	848-8-105	848-8-105	D	ASSEMBLY FIELD CALIBRATION	1.000	EA	PS	2004	4	N	Y
2	848-8-808			GAMMA GUARD ADAPTER ASSEMBLY	1.000	EA	PS	9CR21-96	2	N	Y
3	CAL848-828			CALIBRATION PROCEDURE FOR MODE	1.000	EA		1590	2	N	Y

*** END OF REPORT ***

Product Structure

Product No: 848-8-808 GAMMA GUARD ADAPTER ASSEMBLY
Rev: 002 ECN: 9CR21-96
Drawing Number:

Item No.	Product Number	DrawingNo.	Siz	Description	Quantity	ECN	Rev	Obs	Act
1	848-8-806			ADAPTER BODY	1.000 EA	1590	1	N	Y
2	848-8-123			MOUNTING SPACER	1.000 EA	1590	1	N	Y
3	848-8-124			MOUNTING PLATE	1.000 EA	1590	1	N	Y
4	848-8-807			SUPPORT PLATE	1.000 EA	1590	1	N	Y
5	5-1167			SCREW, MACH, FH, 6-32 X 1.38,	6.000 EA	1590	1	N	Y

*** END OF REPORT ***

Product Structure

Product No: 848-8-5833 ADAPTER, FIELD CALIBRATOR
Rev: 001 ECN: 9JR2-96
Drawing Number:

Item No.	Product Number	DrawingNo.	Siz	Description	Quantity			ECN	Rev	Obs	Act
1	848-8-105	848-8-105	D	ASSEMBLY FIELD CALIBRATION	1.000	EA	PS	2004	4	N	Y
2	848-8-5830			ASSY,HIGH PRESSURZD.ION CHAMB.	1.000	EA	PS	9JR2-96	1	N	Y
3	CAL848-5833			CALIBRATION PROCEDURE	1.000	EA		1590	1	N	Y

*** END OF REPORT ***

Product Structure

Product No: 848-8-5830 ASSY,HIGH PRESSURZD.ION CHAMB.
Rev: 001 ECN: 9JR2-96
Drawing Number;

Item No.	Product Number	DrawingNo.	Siz	Description	Quantity	ECN	Rev	Obs	Act
1	848-8-5831			ADAPTER BODY	1.000 EA	1590	1	N	Y
2	848-8-123			MOUNTING SPACER	1.000 EA	1590	1	N	Y
3	848-8-124			MOUNTING PLATE	1.000 EA	1590	1	N	Y
4	848-8-5832			SUPPORT PLATE	1.000 EA	1590	1	N	Y
5	5-1167			SCREW, MACH, FH, 6-32 X 1.38,	6.000 EA	1590	1	N	Y

*** END OF REPORT ***

Product Structure

Product No: 848-8-400 ADAPTER W/S.S.FLANGE ASSEMBLY
Rev: 001 ECN: 1590
Drawing Number:

Item No.	Product Number	DrawingNo.	Siz	Description	Quantity	ECN	Rev	Obs	Act
	5-497		PN	SCREW, MACH, FH, .25-20 X .75,	2.000 EA	1329	1	N	Y
	848-8-3072			GUIDE	1.000 EA	1590		Y	Y
	848-8-4002			ADAPTER FLANGE FOR S.S FIELD	1.000 EA	1590	1	Y	Y

*** END OF REPORT ***

Appendix E

MODIFICATION SHEETS

E.1 MODIFICATION SHEETS

Procedure/Modification Sheets 956A-201-M1MS for 956-201-M1 s/n 104643 through s/n 104645 comprise this appendix.

1 PURPOSE

The purpose of this modification is to provide a standard Model 956A-201 UDR with an auxiliary high alarm output. Relay K1 is jumpered to relay K5 for this purpose.

2 PART(S) AND TEST EQUIPMENT REQUIRED

2.1 One P/N 200-135 Name Plate

2.2 DVM - Fluke Model No. 8050A or Equivalent

2.3 Signal Generator - Wavetek Model No. 187 or Equivalent

3 ACTION

3.1 Remove relay board mounting hardware and retain.

3.2 Remove wire between UDR main board J2-6 and relay board J2-6.

3.3 Install jumper between relay board J2-6 and J2-2.

3.4 Reinstall relay board.

3.5 Remove P/N 200-135 Name Plate Tag and discard.

3.6 Install new ID Tag (P/N 200-135) with new P/N and, if required, S/N.

3.7 This completes the ratemeter modifications.

4 TEST

4.1 Attach power cord.

4.2 Power up UDR.

4.3 Check each setpoint and change if necessary.

Setpoint		
	0	: 1.00E2 mR/h
	1	: 1.00E1 mR/h
	2	: 0.00E0 sec.
	3	: 1.00E3 mR/h
	4	: 1.00E3 mR/h
	5	: 2.00E-2 mR/h/cpm
	7	: 1.00E-1 mR/h
	9	: 1.00E-1 mR/h

Modification Sheet for
Model 956A-201

REV. LEVEL	ECO #	DESCRIPTION/PAGES AFFECTED
2	1957	Change to new format, corrections to Sections 4.8 and 5.0.
A		Initial Release

ENGINEERING		DATE 4-3-01
MANUFACTURING		DATE 4/4/01
QUALITY ASSURANCE		DATE 4/5/2001
RADIATION SAFETY OFFICER		DATE 4/20/01

Inovision Radiation Measurements			DATE 3/30/01		TITLE Modification Sheet for Model 956A-201	
REV 2	ECO NO. 1957	RELEASED FOR PRODUCTION	DOC CTRL	SHEET 1 of 3	NO. 956A-201-M1MS	SIZE MOD

4.4 Attach a signal generator with the output set for a positive pulse square wave of +2V at 1 Hz. Signal input to the UDR is P5 (BNC).

4.5 Power the signal generator.

4.6 With a DVM set to read ohms, the following points of P1 will indicate an open:

(+)	P1-19,	P1-P21	(-)	_____
(+)	P1-1,	P1-3	(-)	_____
(+)	P1-4,	P1-6	(-)	_____

Display will read ≈ 1.20 mR/h.

4.7 Increase the frequency generator to 100 Hz.

4.8 The following points of P1 will be shorted.

(+)	P1-19,	P1-P21	(-)	_____
(+)	P1-1,	P1-3	(-)	_____
(+)	P1-4,	P1-6	(-)	_____

Display will read ≈ 120 mR/h.

4.9 If the UDR passed the test, sign and date this Modification Sheet. If not, review the ACTION portion of this Modification Sheet, checking for errors and perform the TEST portion again.

4.10 Turn off UDR. Remove power cord and generator connections.

5 DOCUMENTATION

Operator shall sign and date this document. Where the original 956A-201 Traveller is available, mark to indicate implementation of this modification. The completed document shall be retained by Q.A.

TEST EQUIPMENT:

DVM MODEL: _____ **S/N:** _____ **CAL DATE:** _____

PROM P/N: _____ **REV.:** _____

PERFORMED BY: _____ **DATE:** _____

Q. A. REVIEW BY: _____ **DATE:**

DOCUMENT NO.: _____

-Left Blank-

MODIFICATION SHEET

DOCUMENT NO.: 956A-201-M1MS REV. A CUST. P.O. NO 4500008 67

PART NO.: 956A-201-M1 S/N 104643 VICO ORD. NO. 157033

MADE FROM: 956A-201 S/N 129

DCR/ECO: 4JR8-96

1.0 PURPOSE

The purpose of this modification is to provide a standard Model 956A-201 UDR with an auxiliary high alarm output. Relay K1 is jumpered to relay K5 for this purpose.

2.0 PART(S) AND TEST EQUIPMENT REQUIRED

PRODUCTION
MAR 2 2 2001
WO # 54214

2.1 One P/N 200-135 Name Plate

2.2 DVM - Fluke Model No. 8050A or Equivalent

2.3 Signal Generator - Wavetek Model No. 187 or Equivalent

3.0 ACTION

3.1 Remove relay board mounting hardware and retain.

3.2 Remove wire between UDR main board J2-6 and relay board J2-6.

3.3 Install jumper between relay board J2-6 and J2-2.

3.4 Reinstall relay board.

3.5 Remove P/N 200-135 Name Plate Tag and discard.

3.6 Install new ID Tag (P/N 200-135) with new P/N and, if required, S/N.

3.7 This completes the ratemeter modifications.

FILE COPY

DWN/DATE	CHK/DATE	ENG/DATE	APP/DATE	QA/DATE
5-1-96	5-1-96	5/6/96	N/A	5/6/96

4.0 TEST

4.1 Attach power cord.

4.2 Power up UDR.

4.3 Check each setpoint and change if necessary.

Setpoint		
0	:	1.00E2 mR/h
1	:	1.00E1 mR/h
2	:	0.00E0 sec.
3	:	1.00E3 mR/h
4	:	1.00E3 mR/h
5	:	2.00E-2 mR/h/cpm
7	:	1.00E-1 mR/h
9	:	1.00E-1 mR/h

4.4 Attach a signal generator with the output set for a positive pulse square wave of +2V at 1 Hz. Signal input to the UDR is P5 (BNC).

4.5 Power the signal generator.

4.6 With a DVM set to read ohms, the following points of P1 will indicate an open:

(+)	P1-19,	P1-P21	(-)	OPEN
(+)	P1-1,	P1-3	(-)	OPEN
(+)	P1-4,	P1-6	(-)	OPEN

Display will read ≈ 1.20 mR/h. 1.20 mR/h

4.7 Increase the frequency generator to 100 Hz.

4.8 The following points of P1 will be shorted

(+)	P1-19,	P1-P21	(-)	<1 Ω
(+)	P1-1,	P1-3	(-)	<1 Ω
(+)	P1-4,	P1-6	(-)	<1 Ω

Display will read ≈ ~~1.20 R~~/h. 120 mR/h DW 3/26/01 120 mR/h

4.9 If the UDR passed the test, sign and date this Modification Sheet. If not, review the ACTION portion of this Modification Sheet, checking for errors and perform the TEST portion again.

4.10 Turn off UDR. Remove power cord and generator connections.

5.0 DOCUMENTATION

Operator shall sign and date this document. Where the original 956A201 Traveller is available, mark to indicate implementation of this modification. The completed document shall be retained by Q.A.

TEST EQUIPMENT:

DVM MODEL: FLUKE 8050A S/N: IRM-0368 CAL DATE: 6-1-00

PROM P/N: 94095603 REV.: B

PERFORMED BY: [signature] DATE: 3/26/01

Q. A. REVIEW BY: [signature] DATE: 4/24/01

DOCUMENT NO.: 956A-201-M1MS

Left Blank.

MODIFICATION SHEET

DOCUMENT NO.: 956A-201-M1MS REV. A CUST. P.O. NO 4500008671

PART NO.: 956A-201-M1 S/N 109644 VICO ORD. NO. 157033

MADE FROM: 956A-201 S/N 130

DCR/ECO: 4JR8-96

1.0 PURPOSE

The purpose of this modification is to provide a standard Model 956A-201 UDR with an auxiliary high alarm output. Relay K1 is jumpered to relay K5 for this purpose.

2.0 PART(S) AND TEST EQUIPMENT REQUIRED

PRODUCTION
MAR 2 2 2001
WO# 54214

2.1 One P/N 200-135 Name Plate

2.2 DVM - Fluke Model No. 8050A or Equivalent

2.3 Signal Generator - Wavetek Model No. 187 or Equivalent

3.0 ACTION

3.1 Remove relay board mounting hardware and retain.

3.2 Remove wire between UDR main board J2-6 and relay board J2-6.

3.3 Install jumper between relay board J2-6 and J2-2.

3.4 Reinstall relay board.

3.5 Remove P/N 200-135 Name Plate Tag and discard.

3.6 Install new ID Tag (P/N 200-135) with new P/N and, if required, S/N.

3.7 This completes the ratemeter modifications.

FILE COPY

DWN/DATE	CHK/DATE	ENG/DATE	APP/DATE	QA/DATE
5-1-96	5-1-96	5/6/96	N/A	5/6/96

4.0 TEST

4.1 Attach power cord.

4.2 Power up UDR.

4.3 Check each setpoint and change if necessary.

Setpoint		
0	:	1.00E2 mR/h
1	:	1.00E1 mR/h
2	:	0.00E0 sec.
3	:	1.00E3 mR/h
4	:	1.00E3 mR/h
5	:	2.00E-2 mR/h/cpm
7	:	1.00E-1 mR/h
9	:	1.00E-1 mR/h

4.4 Attach a signal generator with the output set for a positive pulse square wave of +2V at 1 Hz. Signal input to the UDR is P5 (BNC).

4.5 Power the signal generator.

4.6 With a DVM set to read ohms, the following points of P1 will indicate an open:

(+)	P1-19,	P1-P21	(-)	OPEN
(+)	P1-1,	P1-3	(-)	OPEN
(+)	P1-4,	P1-6	(-)	OPEN

Display will read ≈ 1.20 mR/h. 1.16mR/h

4.7 Increase the frequency generator to 100 Hz.

4.8 The following points of P1 will be shorted.

(+)	P1-19,	P1-P21	(-)	<1Ω
(+)	P1-1,	P1-3	(-)	<1Ω
(+)	P1-4,	P1-6	(-)	<1Ω

Display will read ≈ ~~1.20~~ R/h. 120mR/h 3/26/01 118mR/h

4.9 If the UDR passed the test, sign and date this Modification Sheet. If not, review the ACTION portion of this Modification Sheet, checking for errors and perform the TEST portion again.

4.10 Turn off UDR. Remove power cord and generator connections.

5.0 DOCUMENTATION

Operator shall sign and date this document. Where the original 956A201 Traveller is available, mark to indicate implementation of this modification. The completed document shall be retained by Q.A.

TEST EQUIPMENT:

DVM MODEL: FLUKE 8050A S/N: IRM-0368 CAL DATE: 6-1-00

PROM P/N: 94095603 REV.: B

PERFORMED BY: [signature] DATE: 3-26-01

Q. A. REVIEW BY: [signature] DATE: 5/1/01

DOCUMENT NO.: 956A-201-M1MS

Left Blank

MODIFICATION SHEET

DOCUMENT NO.: 956A-201-M1MS REV. A CUST. P.O. NO 4500008671

PART NO.: 956A-201-M1 S/N 104645 VICO ORD. NO. 157033

MADE FROM: 956A-201 S/N 133

DCR/ECO: 4JR8-96

1.0 PURPOSE

The purpose of this modification is to provide a standard Model 956A-201 UDR with an auxiliary high alarm output. Relay K1 is jumpered to relay K5 for this purpose.

2.0 PART(S) AND TEST EQUIPMENT REQUIRED

PRODUCTION
MAR 2 2 2001
WO # 54214

2.1 One P/N 200-135 Name Plate

2.2 DVM - Fluke Model No. 8050A or Equivalent

2.3 Signal Generator - Wavetek Model No. 187 or Equivalent

3.0 ACTION

3.1 Remove relay board mounting hardware and retain.

3.2 Remove wire between UDR main board J2-6 and relay board J2-6.

3.3 Install jumper between relay board J2-6 and J2-2.

3.4 Reinstall relay board.

3.5 Remove P/N 200-135 Name Plate Tag and discard.

3.6 Install new ID Tag (P/N 200-135) with new P/N and, if required, S/N.

3.7 This completes the ratemeter modifications.

FILE COPY

DWN/DATE	CHK/DATE	ENG/DATE	APP/DATE	QA/DATE
5-1-96	5-1-96	5/6/96	N/A	6/6/96

4.0 TEST

4.1 Attach power cord.

4.2 Power up UDR.

4.3 Check each setpoint and change if necessary.

Setpoint		
	0 :	1.00E2 mR/h
	1 :	1.00E1 mR/h
	2 :	0.00E0 sec.
	3 :	1.00E3 mR/h
	4 :	1.00E3 mR/h
	5 :	2.00E-2 mR/h/cpm
	7 :	1.00E-1 mR/h
	9 :	1.00E-1 mR/h

4.4 Attach a signal generator with the output set for a positive pulse square wave of +2V at 1 Hz. Signal input to the UDR is P5 (BNC).

4.5 Power the signal generator.

4.6 With a DVM set to read ohms, the following points of P1 will indicate an open:

(+)	P1-19,	P1-P21	(-)	OPEN
(+)	P1-1,	P1-3	(-)	OPEN
(+)	P1-4,	P1-6	(-)	OPEN

Display will read ≈ 1.20 mR/h. 1.20 mR/h

4.7 Increase the frequency generator to 100 Hz.

4.8 The following points of P1 will be shorted.

(+)	P1-19,	P1-P21	(-)	<1Ω
(+)	P1-1,	P1-3	(-)	<1Ω
(+)	P1-4,	P1-6	(-)	<1Ω

Display will read ≈ ~~1.20 R/h.~~ 120 mR/h 118 mR/h

QW 3/26/01

4.9 If the UDR passed the test, sign and date this Modification Sheet. If not, review the ACTION portion of this Modification Sheet, checking for errors and perform the TEST portion again.

4.10 Turn off UDR. Remove power cord and generator connections.

5.0 DOCUMENTATION

Operator shall sign and date this document. Where the original 956A201 Traveller is available, mark to indicate implementation of this modification. The completed document shall be retained by Q.A.

TEST EQUIPMENT:

DVM MODEL: FLUKE 8050A S/N: IDM-0368 CAL DATE: 6-1-00

PROM P/N: 94095603 REV.: B

PERFORMED BY: [signature] DATE: 3-26-01

Q. A. REVIEW BY: [signature] DATE: 5/1/01

DOCUMENT NO.: 956A-201-M1MS

- Left Blank -