Attachment 9
Vendor Manual, includes:
Test Plan and Procedures
System Manual
Operators Instruction Manual
Factory Acceptance Test Procedure
Shop Order # 157033

Shop Order No. S157033

CUSTOMER ACKNOWLEDGEMENT

Inovision acknowledges acceptance of your purchase order subject to Inovision's standard terms and conditions as set forth herein and on the reverse side.

Refer to INOVISION Order Number on all Correspondence

INOVISION RADIATION MEASUREMENTS, LLC

6045 COCHRAN ROAD CLEVELAND, OH 44139-3303
(440) 248-9300 (800) 850-4608
FAX (440) 349-2307
www.inovision.com

THIS IS NOT AN INVOICE PAGE 1

SOLD TO:
ROCHESTER GAS & ELECTRIC
CORPORATION
PO BOX 40660
ROCHESTER NY
US 14604

SHIP TO:
ROCHESTER GAS & ELECTRIC
GINNA STATION
1503 LAKE ROAD
ATTN MIKE HARRISON
ONTARIO NY
US 14519

P/L:

SALESMAN: Jane Zilka

CUSTOMER ORDER NO.	OUR ORDER NO.	ORDER DATE	PAYMENT TERMS	SHIP VIA	CUSTOMER #
4500008671	157033	7/28/00	NET 30 DAYS	UPS	132

ITEM NO.	QUANTITY ORDERED	INOVISION PART NUMBER	DESCRIPTION	UNIT PRICE	PRICE EXTENSI
32	1.000	S157033A	TOTAL CONTRACT	55850.000	55850.0
		Scheduled Ship Date	11/08/00		
			QUOTED BY JON HALE		
			SOURCE SURVEILLANCE REQUIRED		
			FOR THIS PURCHASE ORDER.		
			THIS CONTRACT INCLUDES THE		
			FOLLOWING:		
			P/N 50-100, 400FT CABLE.		
			P/N 848-8-105, ADAPTER, 1 UNIT		
			P/N 897A-210, DETECTOR GM TUBE		
			P/N 956A-201-M1, DIGITAL		
			RATEMETER		
			CERTIFICATE OF CONFORMANCE.		
			**********		
			END USER: GINNA/SWIFT,P		
****					
ATTN	SHIPPING:	"QA INSPECTION	REQUIRED."		
****					
Safety related		items. 10CFR21	applies.		
****					
Thank	you for	your order.			
	1.000		** TOTALS **		55850.0

Customer Schedule:

Inovision Schedule

INOVISION Radiation Measurements

Control Room Intake Radiation Monitors

Operator's Instruction Manual

Prepared for:
Rochester Gas and Electric
Ginna Nuclear Station
R.G. & E.P.O. 4500008671
Inovision S. O. S157033

Contains Operating Instructions and Service Information for the Control Room Intake Radiation Monitors

WARRANTY

This instrument with its accessories is warranted by INOVISION RADIATION MEASUREMENTS, against defects in materials and workmanship for a period of one year from the date of original shipment.

During the warranty period, INOVISION will repair or, at its option, replace, at no charge, an instrument containing such defect, provided that it is returned, transportation prepaid, to the INOVISION repair facility. Instruments repaired in warranty will be returned transportation prepaid within the United States.

In addition, the calibration of each instrument is warranted to be within its specified accuracy at the time of shipment. If an error in this initial calibration is discovered, the instrument will be recalibrated at no charge, provided it is returned as described above. This does not apply to any calibration deviation that may result from normal use.

There are no warranties, expressed or implied, including without limitation any implied warranty of merchantability or fitness, which extend beyond that description on the face hereof. This express warranty excludes coverage of and does not provide relief for incidental or consequential damages of any kind or nature, including but not limited to loss of use, loss of sales or inconvenience. This exclusive remedy of the purchaser is limited to repair, recalibration, or replacement of the instrument at INOVISION'S option.

This warranty does not apply if the product, as determined by INOVISION, is defective because of normal wear or accident or misuse, or as a result of service or modification by other than an authorized INOVISION repair facility. This warranty is void if the unit is subjected to temperatures above 55°C, or contaminated with radioactive material.

INOVISION Radiation Measurements

6045 Cochran Road • Cleveland, Ohio 44139 • U.S A. • 1-800-850-4608 • 1-440-248-9300 • Fax 1-440-349-2307 • www inovision com

Control Room Intake Radiation Monitors

Instruction Manual

Manual No. S157033A-1
Rev. 1 1 may 01

COPYRIGHT AND TRADEMARK

MANUAL ADDENDA

Any improvements or changes concerning the instrument or manual will be explained in an addenda included with the manual. Be sure to note these changes and incorporate them into the manual.

PROCEDURES, WARNINGS, AND CAUTIONS

The equipment described in this manual is intended to be used for the detection and measurement of ionizing radiation. It should be used only by persons who have been trained in the proper interpretation of its readings and the appropriate safety procedures to be followed in the presence of radiation.

Although the equipment described in this manual is designed and manufactured in compliance with all applicable safety standards, certain hazards are inherent in the use of electronic and radiometric equipment.

WARNINGS and CAUTIONS are presented throughout this document to alert the user to potentially hazardous situations. A WARNING is a precautionary message preceding an operation which has the potential to cause personal injury or death. A CAUTION is a precautionary message preceding an operation which has the potential to cause permanent damage to the equipment and/or loss of data. Failure to comply with WARNINGS and CAUTIONS is at the user's own risk and is sufficient cause to terminate the warranty agreement between Inovision Radiation Measurements and the customer.

Adequate warnings are included in this manual and on the product itself to cover hazards that may be encountered in normal use and servicing of this equipment. No other procedures are warranted by Inovision Radiation Measurements. It shall be the owner's or user's responsibility to see to it that the procedures described here are meticulously followed, and especially that WARNINGS and CAUTIONS are heeded. Failure on the part of the owner or user in any way to follow the prescribed procedures shall absolve Inovision Radiation Measurements and its agents from any resulting liability.

Indicated battery and other operational tests must be performed prior to each use to assure that the instrument is functioning properly. If applicable, failure to conduct periodic performance tests in accordance with ANSI N323-1978 (R1983) Radiation Protection Instrumentation Test and Calibration, paragraphs 4.6 and 5.4, and to keep records thereof in accordance with paragraph 4.5 of the same standard, could result in erroneous readings of potential danger. ANSI N323-1978 becomes, by this reference, a part of this operating procedure.

CONTENTS

Table of Contents

Section 1
GENERAL INFORMATION

1.1 INTRODUCTION

The radiation monitoring system described in this manual is designed for use at the Rochester Gas and Electric Company's Ginna Nuclear Power Station located in Ontario, NY. The monitor system is comprised of two redundant Low Range GM Area Monitors installed in a 42" diameter duct that provides intake air to the Control Room. The GM channels continuously monitor gamma radiation levels in the duct and provide alarm actuation should levels rise above a pre-established setpoint. The monitors display radiation levels and alarms in the rate format in units of mR/h.

The equipment comprising the radiation monitoring system is listed below:

Model 956A-201-M1, Universal Digital Ratemeter

Model 897A-210, Low Range GM Detector

Model S157033A1, Duct Adapter Assembly

Model 948B-1, 19" Dual Bay Rack Chassis

Model S157033A2, Line Filter/Surge Suppressor Assembly

All equipment supplied is designed by Inovision Radiation Measurements.

1.2 EQUIPMENT OVERVIEW

This section is a brief overview of each piece of equipment utilized for each of the two channels. A description of the equipment is contained in the following paragraphs. For further information on individual pieces of equipment, refer to the appropriate Standard Manuals located in Appendix D.

1.3 UNIVERSAL DIGITAL RATEMETER 956A-201-M1

The model 956A-201-M1 Universal Digital Ratemeter (UDR) is designed for use with 897A series GM Detectors. A range of display from 0.01 to 1E5 mR/h is available. Monitored range is detector dependent and normally covers five decades of operation. The monitors provided to Ginna cover a range of gamma radiation from 0.01 to 1E3 mR/h. Standard features of the UDR include a floating decimal point display in mR/h, R/h or kR/h, a multicolor bargraph indicating channel alarm status and dose rate, front panel controls for alarm setpoint display, alarm acknowledgement and AC power switch. An adjustable High Voltage power supply for the detector is provided. Unpowered (dry) relay contacts are provided for Fail, Alert and High Radiation alarms. A powered contact is provided for detector check source activation. All relays except the check source relay are operated in the normally energized or "fail safe" mode.

The –M1 version of the 956A-201 differs from the standard model in that an additional two dry contact sets are provided for the High Alarm output giving a total of three form "C" sets. The spare relay, identified as K1, is driven in parallel with the standard High alarm relay K5 to provide these additional output contacts. Refer to Loop Diagram S157033A-104 for available relay output contacts and ratings. Detailed 956A-201 information may be found in the Standard Manual in Appendix D.

1.4 LOW RANGE GM AREA DETECTOR 897A-210

The model 897A-210 detector utilizes a Geiger-Müller (GM) tube as the radiation sensor. The GM tube, electronic printed circuit board and operational radiation check source are contained within an aluminum environmental housing. All detector electrical connections are made through a sealed bulkhead connector. The range of operation of this detector is 0.01 mR/h to 1R/h for gamma radiation energies from 80 keV to 1.5 MeV.

The detector electronic circuitry includes the required pulse shaping and amplification, anti-jam (prevents a false low reading if radiation levels greatly exceed the detector range), local pulse height discriminator and output line driver. The detector is supplied with a nominal 575 VDC high voltage and +15 VDC low from the 956A-201-M1. A local regulator in the detector reduces the +15 VDC to +10 for the internal circuitry.

An operational Check Source in the form of an 8 μCi, ^{36}CI hermetically sealed capsule is provide to verify the ability of the detector to respond to radiation. The operational Check Source will provide a minimum upscale response of 10 mR/h when activated. As the Check Source half-life exceeds 3E5 years, decay correction over time is unnecessary.

The detector output is a five-volt square wave whose frequency is proportional to radiation intensity. The output is designed to drive a 50 OHM load at distances up to 1500 feet from the detector.

Refer to Appendix D for additional information on 897A series detectors.

1.5 DUCT ADAPTER ASSEMBLY S157033A1

The S157033A1 provides the mechanical means for mounting the 897A-210 detectors in the Intake Duct and also provides for a sealed electrical penetration of the duct wall.

The S157033A1 Duct Adapter is comprised of two major subassemblies. The S157033A11 Duct Adapter is designed for permanent installation on the duct wall. The S157033A12 Detector Mounting fabrication is the removable portion of the assembly and positions the detector on the duct centerline when installed. The S157033A12 has a standard detector wall mounting bracket attached to the end of the 22" cantilevered arm and a short cable assembly consisting of an outer bulkhead connector for field cable connection and an internal connector to mate with the detector. A replaceable gasket is provided to seal the Detector Mounting fabrication and the Duct Adapter fabrication. The Duct Adapter is equipped with eight ¼"-20 X 2" threaded rods (studs) which are field replaceable. Refer to Appendix A for dimensions and assembly details of the S157033A1 Duct Adapter.

1.6 RACK CHASSIS 948B-1

The 948B-1 Rack Chassis is a dual channel version of the standard three channel 948-1 Rack Chassis. The 948B-1 is 19" in width and is provided with front and rear attachment points for standard EIA mounting. The 948B-1 holds two 956A-201-M1 Ratemeters and the S157033A2 Line Filter/Surge Suppressor Assembly. Physical dimensions of the 948B-1 are provided in Appendix A.

1.7 LINE FILTER/SURGE SUPPRESSOR ASSEMBLY S157033A2

The S157033A2 Line Filter/Surge Suppressor Assembly is provided to fulfill contractual requirements for Electromagnetic Compliance (EMC). The assembly consists of two separate and independent line conditioning circuits that provide filtered AC power to each 956A-201-M1 Ratemeter. The S157033A2 mounts in the center section of the 948B-1 Rack Chassis. The major active components of the S157033A2 are (2) 960SS-200-10 Surge Suppressor circuit boards, (2) 92-9015-A Line Filters and (2) 14-235 ferrite cubes. The S157033A2 also contains AC line and neutral fuses that protect the internal circuitry from severe over-voltage conditions.

1.8 RECOMMENDED SPARE PARTS

The basic contract provides for a single spare 897A-210 Detector and 956A-201-M1 Ratemeter. The following additional items should be stocked:

Part Number	Description	Qty.
92-9106-A	Fuse, Ratemeter 2 A 3AG	5
19-2	Fuse, S157033A2 Line Filter/Surge Suppressor 2 A	5
5-1308	Stud, Duct Adapter, 316SS, ¼"-20 X 2"	4
5-1307	Nut, Duct Adapter, 316SS ¼"-20	8
5-858	Washer, Flat, Duct Adapter, ¼" SS	8
5-822	Washer, Split, Duct Adapter, ¼" SS	8
MSJ-4325	"Loctite", Grade A, for 5-1308 stud replacement	1

Section 2

RECEIVING INSPECTION AND STORAGE

2.1 RECEIVING INSPECTION AND STORAGE

Upon receipt of the unit:

1. Check the shipping cartons(s) and their contents for in-shipment damage. If damage is evident, file a claim with the carrier and contact Inovision Radiation Measurements Repair Coordinator at 440-498-2564 or 800-850-4606 immediately.
2. Check that all items listed on the packing slip are present and in good condition. If any items are missing or damaged, contact Inovision Radiation Measurements Repair Coordinator at 440-498-2564 or 800-850-4606 immediately.

2.2 STORAGE

Storage of the instruments must comply with Level B storage requirements as outlined in ANSI N45.2.2 (1972) Section 6.1.2(.2). The storage area shall comply with ANSI N45.2.2 (1972) Section 6.2 Storage Area, Paragraphs 6.2.1 through 6.2.5. Housekeeping shall conform to ANSI N45.2.3 (1972).

Level B components shall be stored within a fire resistant, tear resistant, weather tight enclosure, in a well ventilated building.

Storage of the instruments must comply with the following:

1. Inspection and examination of items in storage must be in accordance with ANSI N45.2.2 (1972) Section 6.4.1.

2. Requirements for proper storage must be documented and written procedures or instructions must be established.

3. In the event of fire, post-fire evaluation must be in accordance with ANSI N45.2.2 (1972), Section 6.4.3.

4. Removal of items from storage must be in accordance with ANSI N45.2.2 (1972), Sections 6.5 and 6.6.

Section 3

INSTALLATION

3.1 INSTALLATION

Installation consists of mounting and wiring the Control Room equipment, mounting and sealing the Duct Adapter and the installation and termination of the 50-100 field cable between the 897A-210 Detector and 956A-201-M1 Ratemeter. Refer to applicable drawings in Appendix A and the standard manuals in Appendix D for layout and dimensional information. The Customer is responsible for securing the monitoring equipment and cable termination. Prior to connecting any cabling to the detector or Ratemeter, point to point continuity checks should be performed to verify that the wiring is in accordance with Loop Diagram S157033A-104. A 1000 VDC hi-pot test is recommended for the terminated High Voltage RG59 cable prior to interconnection. Installation of the system is as follows:

WARNING

ENSURE THAT ALL SYSTEM POWER IS REMOVED PRIOR TO CONNECTING ANY FIELD OR ANCILLARY WIRING.

CAUTION

Personnel performing the installation must be familiar with the intended operation of the monitoring system and the location of each of the components of the monitoring system.

CAUTION

Failure to install the equipment in accordance with the information presented could result in damage to the equipment or non-compliance with specific equipment qualifications.

3.2 CONTROL ROOM EQUIPMENT

All Control Room equipment is contained within the 948B-1 Rack Chassis. The 948B-1 Rack Chassis will be shipped with the S157033A2 Line Filter/Surge Suppressor already installed. The 956A-201-M1 Ratemeters should be installed after the mechanical installation of the rack chassis is complete. The 948B-1 rack chassis is designed to be inserted into a cabinet containing standard EIA mounting frames or surface mounted through a solid panel of sufficient gauge material to allow for tapping of #10-32 mounting holes. In either case, the rear of the chassis must be supported to maintain seismic qualification. Two right angle brackets are provided for rear mounting of the chassis to EIA frames. If rear EIA mounting frames are not installed in the cabinet, fishplates may be directly attached to the chassis sides. The rack chassis is provided with front mounting hardware in the form of #10-32 oval head screws, nylon washers and dress covers. Refer to drawing 948B-1 in Appendix A for dimensional information.

Customer 120 VAC 60 Hz power is connected to the rear barrier terminal TB1 of the S157033A2 Line Filter/ Surge Suppressor. Train "A" AC power is connected to terminals 1-3, Train "B" AC power to terminals 4-6. Nominal power consumption is 28 watts per channel. The S157033A2 Line Filter/Surge Suppressor provides two pre-wired and terminated AC power service loops that plug into the respective J3 connector on the 956A-201-M1.

Customer connections other than detector wiring are available on 956A-201-M1 connectors J1 (relay contacts) and J6 (analog outputs). Connectors are provided in a kit form (p/n 942A-100-4) with each Ratemeter. Assembly instructions for each type are be located in the 955A Ratemeter standard manual in the Cable Termination Appendix. All connectors are solder type and no special tools are required for connector assembly. AMP tool #305183 is required to remove pins from the AMP type connectors used for P1 and P2. Refer to drawing S157033A-104 in Appendix A for specific details. A minimum service loop sufficient to withdraw the ratemeter completely through the rack chassis should be maintained on all rear panel wiring.

Detector wiring is terminated to 956A-201-M1 rear panel connectors J4 (High Voltage/SHV type), J5 (Signal /BNC type) and J2 (Low Voltage and Check Source drive/AMP type). All required connectors are provided packed in the 942A-100-4 connector kit. Connector assembly instructions and coaxial cable trim information is provided in the 956A-201 ratemeter standard manual Cable Termination Appendix. All connectors are solder type and no special tools are required for assembly. AMP tool #305183 is required to remove pins from connector P1. Refer to drawing S157033A-104 in Appendix A of this manual for specific wiring detail. Note that the overall shield drain wire of the 50-100 detector composite cable MUST be connected to earth ground at the control room end in order to maintain qualified Electromagnetic Compliance.

3.3 DUCT MOUNTED EQUIPMENT

The two major subassemblies of the S157033A1 Duct Adapter Assembly, the S157033A11 Duct Adapter fabrications and the S157033A12 Detector Mounting fabrications are shipped assembled as a unit Remove and retain the nuts, lock washers and flat washers from the studs on each assembly. The detector mounting brackets and detector wiring pigtails are pre-assembled on each of the S157033A12 Detector Mounting fabrications but the detectors are packed separately.

The S157033A11 Duct Adapter is designed for permanent installation on the Control Room Intake duct wall. Select a location that will allow the 22" long Detector Mounting fabrication to be completely withdrawn from the duct without obstruction. Using the adapter as a template, mark the location of each of the eight Duct Adapter mounting holes. After the eight holes have been marked, a 10" diameter hole must be cut in the duct wall at the geometric center of the mounting hole pattern. The recommended mounting hardware for the S157033A11 Duct Adapter are 3/8" diameter, Grade 5 or better bolts. A permanent sealant should be applied at the Intake Duct/Duct Adapter interface and the Duct Adapter should be mounted with the selected hardware.

Record the serial number of the 897A-210 detector selected. Place the 897A-210 detector into the detector mounting bracket connector end first and insert and tighten the mating connector on the Detector Mounting fabrication pigtail. Fully seat the detector into the mounting bracket until it bottoms on the two stop pins. Tighten the two hex set screws on the bracket using a 1/8" hex (Allen) key.

Verify that the neoprene gasket (p/n S157033A13) is in place on the S157033A11 Duct Adapter. Insert the S157033A12 Detector Mounting fabrication into the Duct Adapter so that the alignment key on the S157033A12 is in the 12 o'clock position. Replace the flat washers, lock washers and nuts removed when the two subcomponents of the S157033A1 assembly were separated. Torque all eight of the nuts in an alternating pattern to 75 inch pounds.

3.4 FIELD CABLE INSTALLATION

The Detector to Ratemeter interconnection cable (p/n 50-100) is a composite cable with a nominal OD of 0.67". The cable consists of eight 18 ga. single conductors, one RG58 coaxial cable and one RG59 coaxial cable. An overall foil shield with a drain wire wraps all conductors. Termination at the Ratemeter end has been described under the installation of Control Room Equipment. At the Intake Duct, the cable is terminated with a solder pin, female military style (AN) connector. The connector (p/n 92-7005-17A), clamp (p/n 92-7005-9A) and bushing (p/n 92-7005-12A) are provided with the 897A-210 detector. No special tools are required for installing this connector. Connector wiring in accordance with Loop Diagram S157033A-104 is required to maintain qualified Electromagnetic Compliance. The overall shield drain wire and the RG58 coax cable braid MUST be connected to pin "K" along with the dedicated single conductor from the 956A-201-M1 Ratemeter ground originating at J2-3.

Allow sufficient free length of 50-100 cable at the detector location so that the detector may be removed from the Duct Adapter assembly for calibration checks using the Field Calibrator. The Field Calibrator (848-8A) requires a stable platform with a minimum 1.5 square feet of area capable of supporting 30 lbs.

3.5 START-UP

NOTE

Before applying AC power, read the "Operation" section of each of the Standard Instruction Manuals located in Appendix D.

Note

Each Ratemeter and Detector will be tagged to indicate pairing. The Detector **Conversion Constant** and **Tau** (dead time) value will have been entered into Ratemeter function switch positions **5** and **3**, respectively. If the Ratemeter set points have been accidentally defaulted, reenter the Conversion Constant and Tau values provided on the Detector data sheet.

Note

If the Ratemeter does not receive any pulses from the detector within five minutes of power-up, it will enter into FAIL mode, illuminate the FAIL indicator and de-energize the FAIL relay. Should this condition occur, isolate the cause of the problem to the Ratemeter, Detector or field cabling and correct prior to proceeding.

After the equipment has been installed and all pre-power tests performed, interconnect the monitoring equipment in accordance with Loop Diagram S157033A-104.

1. Apply power to the channel by depressing and releasing the Ratemeter front panel AC power switch.
2. Enter or verify the set points in the Table below and record these values. Setpoints are entered by placing the rotary function switch in the numbered position corresponding to the set point and depressing the "ENTER" push button to display the current set point value. If the set point is correct, depress "ENTER" again to accept the value, then move the function switch to the next desired position. If the value is to be changed, use the "DIGIT" and "VALUE" pushbuttons to edit the setpoint value, then depress "ENTER" to accept.

NOTE

The Alert setpoint value entered must always be less than or equal to the High alarm setpoint or an error code will be displayed.

NOTE

The values for Low scale, Full scale, Under range and Over range must be multiples of ten or decade values or an error code will be displayed.

Function Switch Position	Setpoint	Value
0	High Radiation Alarm in mR/h	Customer Determined
1	Alert Radiation Alarm in mR/h	Customer Determined
2	Tau (dead time) in minutes	Detector Specific
3	Analog Output Full Scale in mR/h	1.00E+03
4	Over Range Value in mR/h	1.00E+03
5	Conversion Constant in mR/h/CPM	Detector Specific
6	Not Used	N/A
7	Analog Output Low Scale in mR/h	1.00E-02
8	Calibrate or Scaler Mode in seconds	Testing only, raw counts
9	Under Range Value in mR/h	1.00E-02

3. Turn OFF Ratemeter AC power for a minimum of one minute, then reapply AC power and verify the set point values recorded in Step 2.

4. Allow the Ratemeter to operate for a minimum of one minute, and then note the display value. The Ratemeter should now be displaying the true dose rate at the installed location. In a laboratory (low background) environment, this value is nominally 50 μR/h or 0.05 mR/h.

5. Depress and hold the Ratemeter Check Source pushbutton and note the display value after one minute. The Check Source response should be a minimum of 10 mR/h.

Initial Start-up is complete, radiation source response checks or other plant required tests may now be performed.

3.6 SHUT-DOWN

Shutdown is accomplished by depressing and releasing the Ratemeter front panel power switch.

NOTE

Verify that the required individuals are informed that, depending on specific plant configuration, alarm actuation or control function may occur when Ratemeter power is removed. The relay outputs for High, Alert and Fail will change state upon power removal.

Section 4
OPERATION

4.1 OPERATION

Once Start-up and acceptance testing of the monitoring channel is completed, the operation of the equipment is fully automatic. The Detector continuously monitors Intake Duct gamma radiation and provides a proportional pulse train to the Ratemeter signal input. The Ratemeter displays the equivalent radiation dose rate present in the Intake Duct and provides visual alarms and relay contact outputs should the value exceed entered set points. Continuous, radiation proportional, logarithmic analog outputs in the form of 4-20 mA and 0-10 VDC are provided for chart recorders, data loggers or plant computer. Failure of the Detector, Ratemeter power supplies or Ratemeter microprocessor produce a contact state change and cause a visual indicator to illuminate.

When a Ratemeter is activated, a radioactive Check Source is provided to verify channel response. It is recommended that the Check Source be activated at regular intervals and its response noted. As the isotope used for the Check Source has an extremely long half-life and does not require decay correction, any marked departure from the previous response value may be considered abnormal.

Section 5

MAINTENANCE, CALIBRATION AND TROUBLESHOOTING

5.1 MAINTENANCE

The monitoring channels are designed to operate for extended periods of time with no scheduled maintenance. Periodic inspection of the physical condition of gaskets and cabling is recommended. These inspections should be performed at the time of yearly calibration or source testing unless environmental conditions warrant more frequent checks. Replace any gasket showing deterioration such as cracking, checking or shrinking.

Dust build-up on the 948B-1 Rack Chassis ventilation screens should be prevented. High dust conditions may warrant periodic cleaning of ventilation screens as a precaution against heat accelerated electronic failures occurring in the Ratemeter. Dust loading should be checked at the time of yearly Ratemeter electronic tests unless environmental conditions warrant more frequent checks.

The GM tube utilized in the 897A-210 Detector has a manufacturer specified normal life of 5E10 counts. With a 50 µmR/h detector dose rate producing an average output of 15 CPM, the theoretical life span of the tube exceeds 6E3 years. Although higher dose rates, elevated temperature, and the practical limits of the tube's hermetic seals will reduce tube life from this theoretical value, no periodic tube replacement is recommended.

5.2 CALIBRATION - DETECTOR

Each detector is factory calibrated at multiple points over its entire range and provided with a data sheet listing Conversion Constant and Tau (dead time) values. These values are selected by computer curve fit to achieve the best possible detector linearity (rate dependence). A three position, 10 mCi ^{137}Cs equipped Field Calibrator (p/n 848-8A) is provided for field verification of monitoring channel response. This device produces nominal rates of 5, 50 and 250 mR/h. Inovision Radiation Measurements does not recommend altering the Conversion Constant in the field based on 848-8A Field Calibrator response.

WARNING

THE 848-8A FIELD CALIBRATOR IS A SOURCE OF IONIZING RADIATION. ALL PERSONNEL INVOLVED IN ITS USE MUST BE TRAINED IN THE SAFE OPERATION OF SUCH DEVICES. READ THE OPERATING MANUAL FOR THE 848-8A PRIOR TO USE.

Caution

Insure that all required personnel are informed that ALARM actuation and RELAY CONTACT STATE CHANGE may occur during the performance of the monitor calibration check.

1. To perform a response test using the 848-8A, turn off Ratemeter AC power and remove the S157033A11 Detector Mounting fabrication from the S157033A1 Duct Adapter. Disconnect the field cable from the S157033A11 bulkhead connector. Loosen the two set screws on the detector mounting bracket using a 1/8" hex (Allen) key and allow the detector to slide forward in the mounting bracket. A second individual, in communication with the person at the detector location, is required in the Control Room to monitor the Ratemeter Display.
2. Disconnect the Detector from the S157033A11 pigtail and connect the field cable to the Detector. Turn on Ratemeter AC power and allow a 15-minute warm-up to elapse prior to proceeding.
3. Decay correct to the current data the dose rates for the three positions of the 848-8A Field Calibrator. The baseline rates for the three positions are found on the Data Analysis sheet of Inovision procedure CAL848-8AD. The half-life of the 848-8A calibrator source is 30.0 years.
4. For the OPEN and CLOSED positions of the calibrator, multiply the decay corrected dose rates by 0.75 and 1.25 to obtain the minimum and maximum response limits. For the INTERMEDIATE position of the calibrator, multiply the decay corrected dose rate by 0.70 and 1.30 to obtain minimum and maximum response limits.
5. Place the 848-8-105 GM Adapter on the 848-8A Field Calibrator and insert the detector into the 848-8-105 mounting bracket until it bottoms against the stop pins.
6. Allow a minimum of one minute to elapse, and then record the average display value of the Ratemeter for the 848-8A CLOSED position.
7. Unlock the 848-8A and move the Field Calibrator source position lever to the INTERMEDIATE position. Allow a minimum of one minute to elapse, and then record the average display value of the Ratemeter for the INTERMEDIATE position.
8. Move the 848-8A source position lever to the OPEN position. Allow a minimum of one minute to elapse, and then record the average display of the Ratemeter for the OPEN position.
9. Return the source position lever to the CLOSED position, lock and secure the 848-8A Field Calibrator. Turn off Ratemeter AC power and reinstall the Detector and operating configuration cable connections.
10. Place the Detector Mounting fabrication back into the Duct Adapter and replace all retention hardware in the reverse sequence from removal. Tighten the eight ½" hex nuts to 75 inch pounds in an alternating pattern.

11. Apply Ratemeter AC power, verify detector operational Check Source Response and return channel to service.

When a Field Calibrator source check fails to provide acceptable results, the following items should be verified:

1. Detector High Voltage is a nominal **575 VDC**
2. Ratemeter Lower Discriminator is a nominal **0.50 VDC**
3. Ratemeter Upper Discriminator is a nominal **7.0 VDC**
4. The **848-8A** has no **physical damage**, missing alignment guides or other operational abnormalities.
5. Ratemeter set points for **Conversion Constant** and **Tau** are correct for the detector in use.
6. Ratemeter **counter is correct** – verify by injecting a five-volt square wave of known frequency into the Signal Input with the Conversion Constant set to 1.00E0 and Tau set to 0.00E0.

If none of the items listed above prove to be the cause of channel failing the response check, the detector should be returned to the factory for repair and calibration.

5.3 CALIBRATION - RATEMETER

If Test Firmware and the 942TS breakout box are available, perform procedure TP956A-201-3 provided with the 955A Standard Manual as described in Section 6 of the manual.

If Test Firmware and the 942TS breakout box are not available, perform the testing and adjustment (if required) per Section 7 of the 955A Standard Manual.

Ratemeter testing in accordance with one of the two above methods is recommended yearly. If malfunction is suspected, it is desirable to run the testing described in Section 7 to aid in trouble-shooting.

5.4 TROUBLESHOOTING

All routine trouble shooting of the monitor can be accomplished with a minimum of external test equipment. A digital voltmeter and dual trace, 75 Mhz (minimum) oscilloscope are recommended. Use Loop Diagram S157033A-104 for the following steps.

1. If the channel fails to respond when the Detector operational Check Source is activated, use the oscilloscope to determine if a nominal 5-volt square wave is present at the Ratemeter BNC Signal Input P4.
2. If no waveform is present, verify the Ratemeter High Voltage supply is operating at a nominal 575 VDC. A 1000:1 test jack is provided on the Ratemeter HV printed circuit board for this purpose.
3. If a nominal 575 VDC is present at the Ratemeter, verify that the required 575 VDC high voltage and +15 VDC low voltage supplies are present at the detector field connection.

4. If the one or more of the supplies is not present and the Ratemeter is not at fault, verify that the associated conductor has continuity. If both HV and low voltage conductors have continuity, verify that both check source conductors, common (ground return) conductor and the Signal conductor all have continuity.
5. If no fault is found in the Ratemeter or with field cabling, the Detector must be assumed to be at fault. Trouble-shoot the Detector using the 897A section of the 955A Standard Manual.

More in depth trouble-shooting information is provided in the 955A Standard Manual along with all internal circuit diagrams for all equipment

Appendix A

APPLICABLE DRAWINGS AND BILLS OF MATERIALS

A.1 APPLICABLE DRAWINGS AND BILLS OF MATERIAL

Appendix A provides a list of all contract specific drawings and bills of material. Standard Manuals in Appendix D contain generic product drawings and bills of material.

Drawings

Drawing Number	Description
S157033A-104	Loop Diagram, Channels R45 and R46
S157033A1	Duct Adapter Assembly
S157033A13	Gasket, Duct Adapter
S157033A2	Line Filter/Surge Suppressor Assembly
S157033A-105	Schematic, Line Filter/Surge Suppressor
960SS-200-10	Surge Suppressor PCB Assembly
960SS-200-13	Surge Suppressor Schematic
50-100	Composite Cable, sheets 1 and 2
GEL948B-1	Dimensional Outline, Rack Chassis
948B-1-5	Assembly, Rack Chassis
848-8-105	GM Adapter Assembly, Field Calibrator

Bills of Material

S157033A1	Duct Adapter Assembly
S157033A2	Line Filter/Surge Suppressor Assembly
960SS-200-10	Surge Suppressor PCB Assembly
948B-1-5	Assembly, Rack Chassis
848-8-105	GM Adapter Assembly, Field Calibrator

S157033A-104

LTR	ECO NO.	APPROVED	DATE
1	1740	Original Signed By	1/8/01

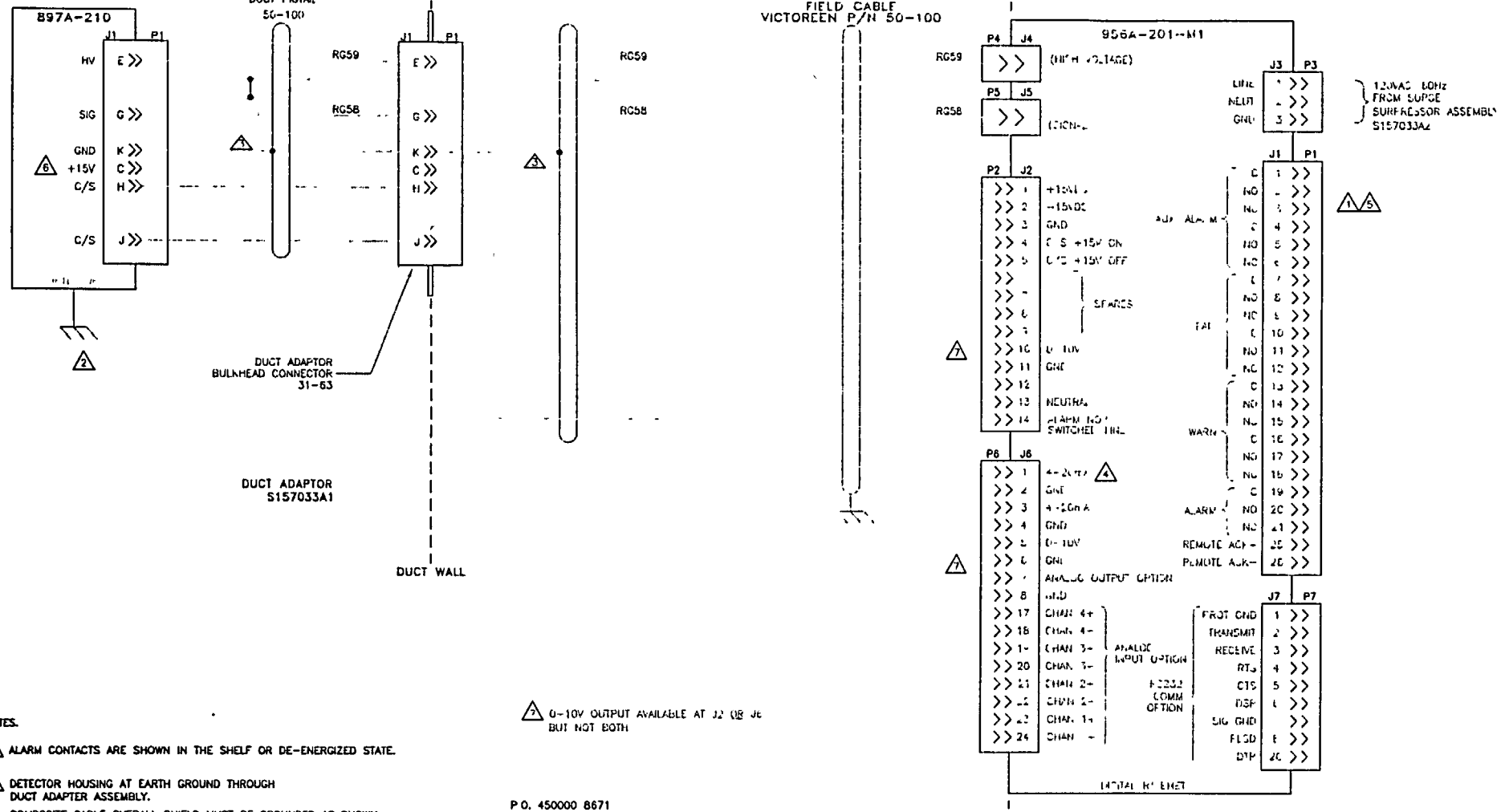

NOTES.

1. ALARM CONTACTS ARE SHOWN IN THE SHELF OR DE-ENERGIZED STATE.
2. DETECTOR HOUSING AT EARTH GROUND THROUGH DUCT ADAPTER ASSEMBLY.
3. COMPOSITE CABLE OVERALL SHIELD MUST BE GROUNDED AS SHOWN TO ACHIEVE QUALIFIED EMI/RFI IMMUNITY.
4. MAXIMUM LOOP RESISTANCE 500 OHMS OR LESS ON 4-20mA OUTPUTS FACTORY CALIBRATION USES 250 OHMS +/- 1% LOAD
5. CUSTOMER CONTACTS RATED AT 5A 120VAC (RESISTIVE)
6. DETECTOR CONNECTOR PIN J1-K ELECTRICALLY CONNECTED TO DETECTOR HOUSING
7. 0-10V OUTPUT AVAILABLE AT J2 OR J6 BUT NOT BOTH

P.O. 450000 8671
S.O. 157033
ROCHESTER GAS AND ELECTRIC
GINNA STATION
CHANNELS R45 AND R46

UNLESS OTHERWISE SPECIFIED DIMENSIONS ARE IN INCHES TOLERANCES ARE.
DECIMALS: .XX±.015 .XXX±.005
ANGLES: ±1° FINISH: 63
FRACTIONS: ±1/32
REMOVE ALL BURRS & BREAK SHARP EDGES .005 TO .015

		DATE
Drawn by	Original Signed	12/06/00
Engineer	Original Signed	1/8/01
Supervisor	Original Signed	1/8
Mfg.	Original Signed	1/8/01

INOVISION RADIATION MEASUREMENTS 8045 COCHRAN ROAD SOLON, OHIO 44139

TITLE: LOOP DIAGRAM FOR CONTROL ROOM INTAKE MONITOR

SIZE	CODE IDENT NO.	DWG NO.	REV
D	1JZH3	S157033A-104	1

SCALE N/A | DO NOT SCALE | SHEET 1 OF 1

S157033A1

LTR	ECO NO.	APPROVED	DATE
2	2014		6/1/01

NOTES

1. DETECTOR. 897A-210.
2. WALL BRACKET ON 843-6-26 SUPPLIED W/DETECTOR 897A-210.
3. SETSCREWS (2) RETAIN DETECTOR IN BRACKET TO REMOVE DETECTOR LOOSEN BOTH SETSCREWS WITH 1/8" ALLEN KEY AND SLIDE DETECTOR OFF END OF CANTILEVER
4. TORQUE BRACKET MOUNTING HARDWARE TO 75 INCH POUNDS MAXIMUM
5. TOTAL WEIGHT OF ASSEMBLY = 40LBS WEIGHT OF REMOVABLE DETECTOR MOUNT WITH DETECTOR INSTALLED = 17 5 LBS.
6. APPLY ITEM 17 (THREAD LOCKER) TO QTY 8 5-1307 STUDS AND THREAD 1" INTO DUCT ADAPTOR FAB (ITEM 1)
7. TORQUE FLANGE NUTS TO 75 INCH POUNDS MAXIMUM

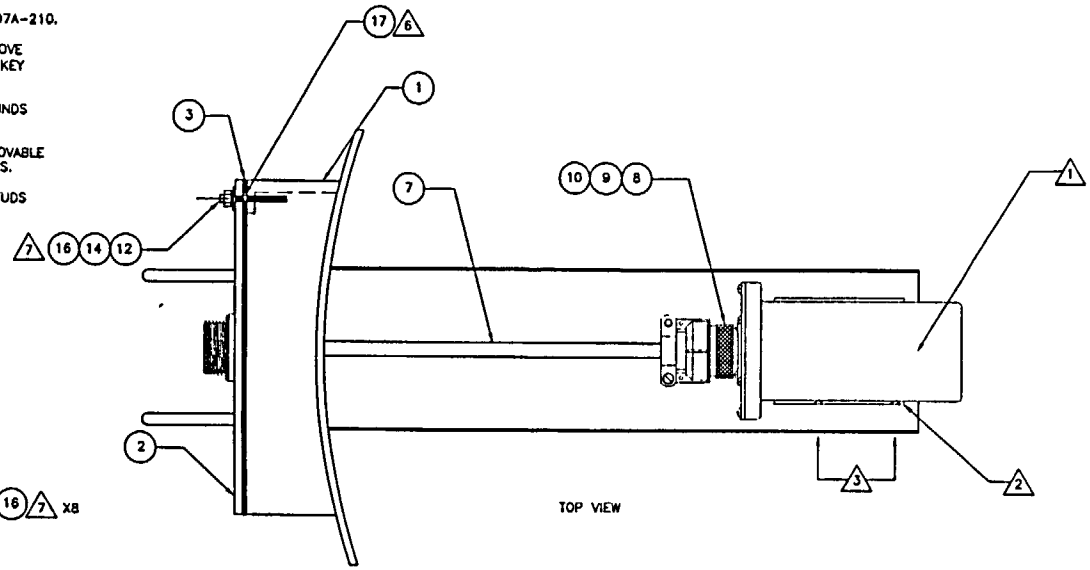

TOP VIEW

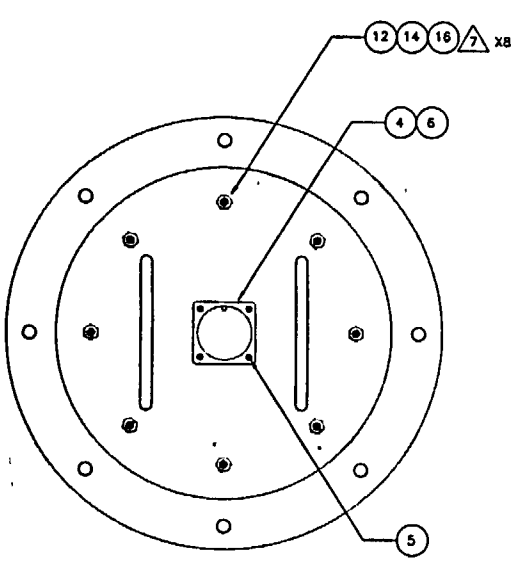

EXTERIOR VIEW

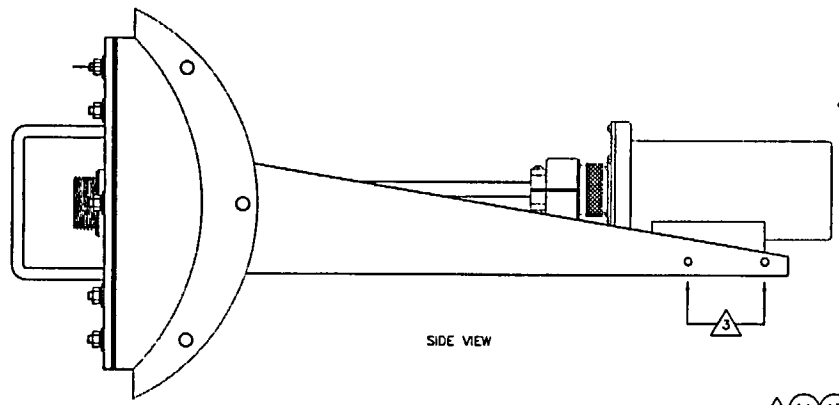

SIDE VIEW

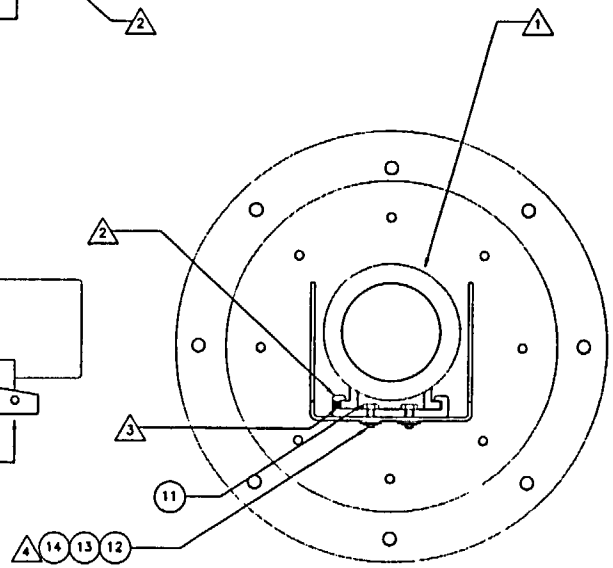

INTERIOR VIEW

P O 450000 8671
S O 157033
ROCHESTER GAS AND ELECTRIC
GINNA STATION
CHANNELS R45 AND R46

UNLESS OTHERWISE SPECIFIED DIMENSIONS ARE IN INCHES TOLERANCES ARE.
DECIMALS: .XX±.015 .XXX±.005
ANGLES. ±1° FINISH: 63
FRACTIONS. ±1/32
REMOVE ALL BURRS & BREAK SHARP EDGES .005 TO .015

DRAWN BY		6/22/01
CHECKED		6/28/01
ENGINEERING		6/28/01
QA		6/28/01

INOVISION RADIATION MEASUREMENTS 8045 COCHRAN ROAD SOLON, OHIO 44139

TITLE: DUCT ADAPTER ASSEMBLY

SIZE	CAGE CODE	DWG NO	REV
D	1JZH3	S157033A1	2

SCALE 1/2 DO NOT SCALE SHEET 1 OF 1

LTR	ECO NO.	APPROVED	DATE
1	1740		

NOTES:

1. MATERIAL: .125 BLACK NEOPRENE (SOLID) 60-70 DUROMETER
2. CERTIFICATE OF CONFORMANCE REQUIRED.

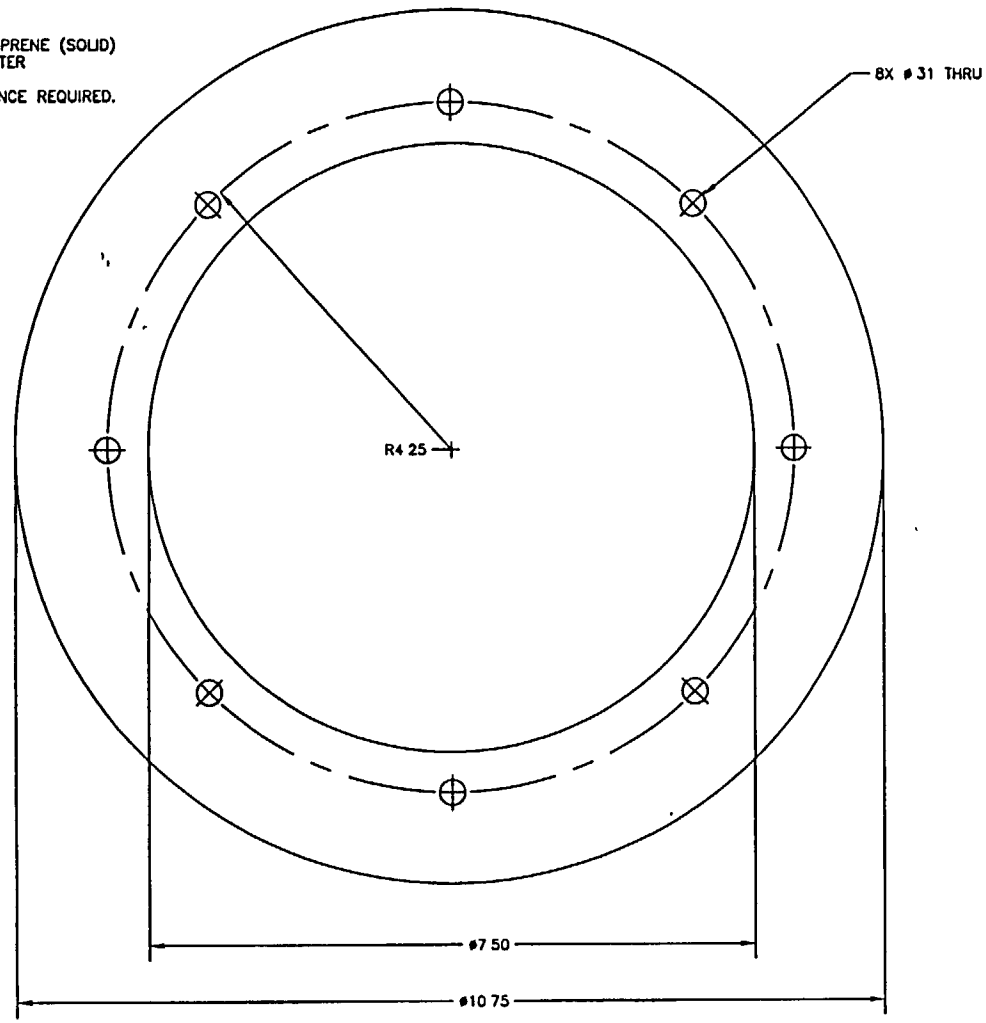

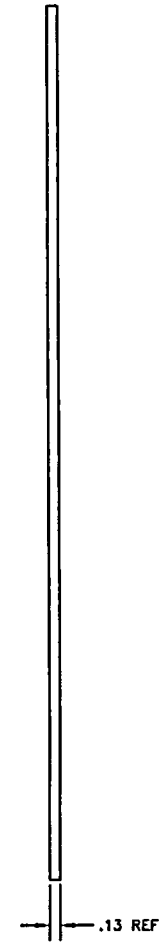

S157033A13

UNLESS OTHERWISE SPECIFIED DIMENSIONS ARE IN INCHES TOLERANCES ARE.
DECIMALS. .XX± 015 XXX± 005
ANGLES. ±1° FINISH. 63
FRACTIONS. ±1/32
REMOVE ALL BURRS & BREAK SHARP EDGES .005 TO .015

DRAWING BY | DATE | ENGINEER | APPROVED | QA

INOVISION INOVISION MEASUREMENTS 8040 COCHRAN ROAD SOLON, OHIO 44139

TITLE GASKET – DUCT ADAPTOR PLATE

SIZE	CAGE NO	DWG NO	REV
C	1JZH3	S157033A13	1

SCALE 1/1 | DO NOT SCALE | SHEET 1 OF 1

S157033A2

LTR	ECO NO.	APPROVED	DATE
1	1740	Original Signed By R. Smith	6/7/91

NOTES:

1. NUMBERED STRIP AND MOUNTING SCREWS (3) SUPPLIED WITH ITEMS 3 & 11. MOUNT STRIP TO ITEMS 3 & 11 (TERMINAL BLOCK) AFTER MOUNTING TERMINAL BLOCK TO RACK CHASSIS.
2. SCHEMATIC DIAGRAM. S157033A-105
3. HARDWARE SHOWN IS SUPPLIED LOOSE. HARDWARE TO BE USED TO MOUNT S157033A2 ASSEMBLY IN 9488-1 RACK CHASSIS CENTER SECTION
4. SERVICE LOOP FOR RATEMETER AC POWER – TWO ARE REQUIRED, WRAP ENTIRE LENGTH WITH ITEM 35 EXCEPT LAST 3" AT RING LUG END.
5. PIN 1 – BLACK WIRE, ITEM 6
   PIN 2 – WHITE WIRE, ITEM 7
   PIN 3 – GREEN WIRE, ITEM 8
6. TRAIN "A" POWER CORD TO TB2-1 (LINE/BLACK) TB2-2 (NEUT/WHITE) AND TB2-3 (GND/GREEN)
   TRAIN "B" POWER CORD TO TB2-10 (LINE/BLACK) TB2-11. (NEUT/WHITE) AND TB2-12 (GND/GREEN)

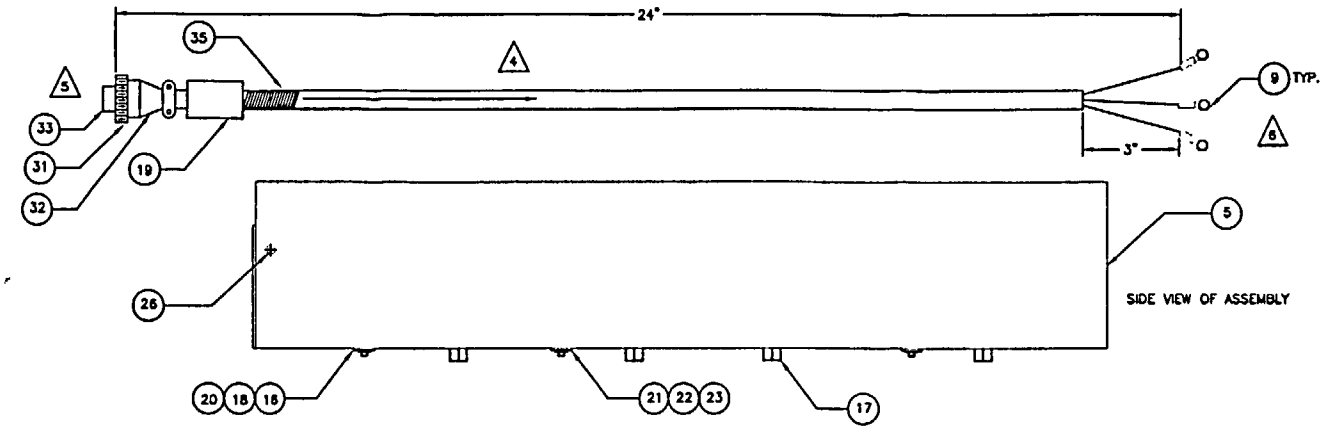

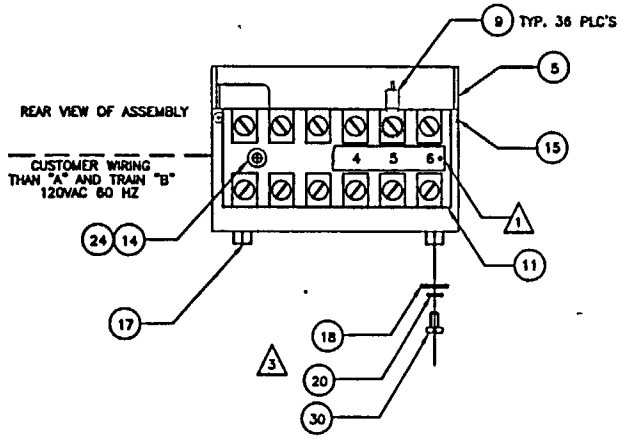

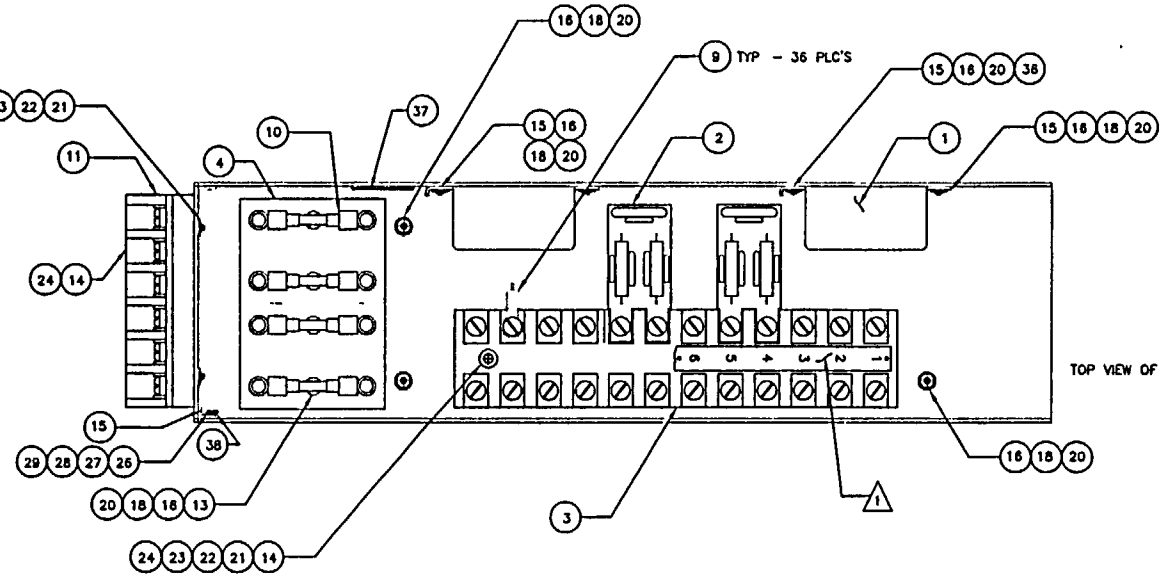

P O 450000 8671
S O 157033
ROCHESTER GAS & ELECTRIC
GINNA STATION

UNLESS OTHERWISE SPECIFIED DIMENSIONS ARE IN INCHES
TOLERANCES ARE:
DECIMALS: .XX±.015 .XXX±.005
ANGLES: ±1° FINISH: 63
FRACTIONS: ±1/32
REMOVE ALL BURRS & BREAK SHARP EDGES .005 TO .015

Drawn by	Original Signed R. Smith	5/23/91
Checked by	Original Signed R. Smith	6/6/91
Approved by	Original Signed R. Smith	6/7/91
Dir.	Original Signed R. Smith	6/7/91

INOVISION RADIATION MEASUREMENTS 8040 COCHRAN ROAD SOLON, OHIO 44139

TITLE: FILTER/SURGE SUPPRESSOR ASSEMBLY

SIZE D | CODE IDENT 1JZH3 | DWG NO. S157033A2 | REV 1

SCALE 1/1 | DO NOT SCALE | SHEET 1 OF 1

LTR	ECO NO.	APPROVED	DATE
1	1740	Original Signed By	1/9/01

NOTES:

1. F1–F4 ARE 2A, 3AG STD. FUSES.
2. TRAIN "A" AND TRAIN "B" RATEMETER CORDS CONNECTED INTERNALLY TO TB2.

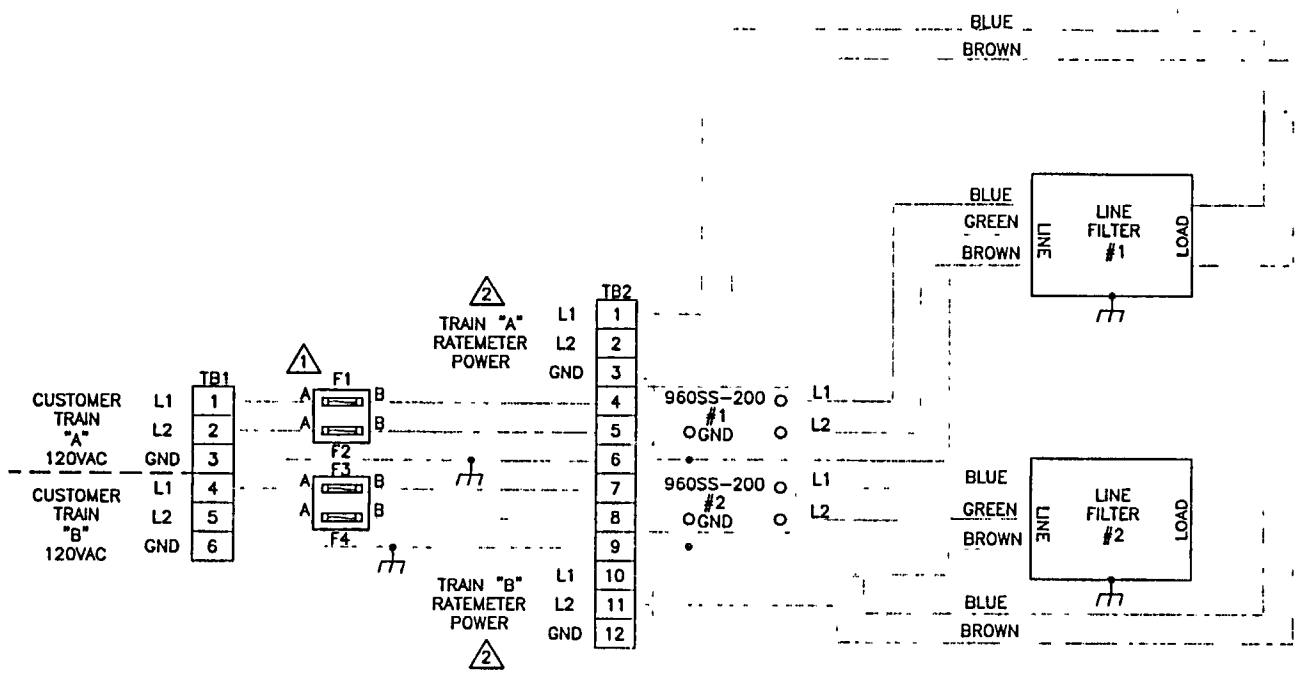

P.O. 450000 8671
S O 157033
ROCHESTER GAS AND ELECTRIC
GINNA STATION

UNLESS OTHERWISE SPECIFIED DIMENSIONS ARE IN INCHES TOLERANCES ARE.
DECIMALS. .XX±.015 .XXX±.005
ANGLES. ±1° FINISH: 63
FRACTIONS ±1/32
REMOVE ALL BURRS & BREAK SHARP EDGES .005 TO .015

DRAWN BY Original Signed	DATE 11/08/00	
ENGINEER Original Signed	1/08/01	
APPROVED Original Signed	N/A	
QA Original Signed	1/8/01	

INOVISION ROCHESTER MEASUREMENTS 8046 DOCKNER ROAD BRIGHT, OHIO 44120

TITLE SCHEMATIC, SURGE SUPPRESSOR

SIZE	CAGE NO	DWG NO	REV
C	1JZH3	S157033A-105	1

SCALE N/A DO NOT SCALE SHEET 1 OF 1

S157033A-105

DWG NO 960SS-200-10 SH 1 REV 5

REVISIONS

REV	DESCRIPTION	DATE	PREPARED
5	REV PER DCR 11CR16-99	11/29/99	MDH

NOTES:

1. FORM LEADS OF RESISTOR R1 & R2 SO THAT THE RESISTORS ARE APPROXIMATELY 1/8" ABOVE COMPONENT SIDE SURFACE OF PCB.
2. TEST PER PROCEDURE TP960SS-200-10.
3. ITEM 6 (18GA GREEN LEAD) INSTALLED FROM COMPONENT SIDE OF PCB AND SOLDERED ON FOIL SIDE.
4. CRIMP ITEM 7 (92-7043-A) USING BURNDY CRIMPER MRB-33T-1N OR EQUIV.

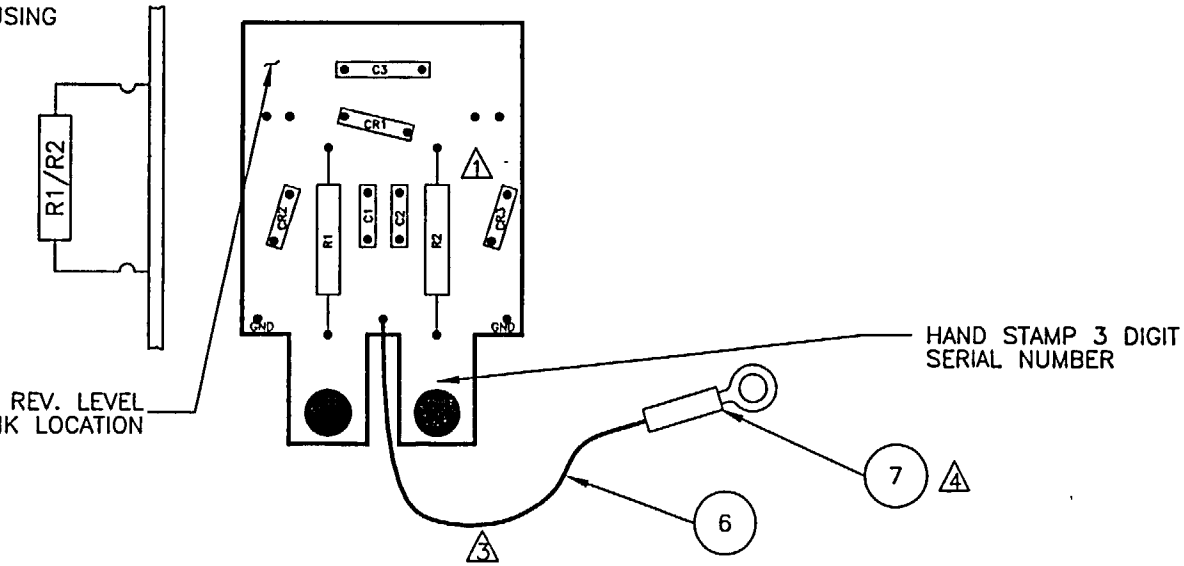

UNLESS OTHERWISE SPECIFIED DIMENSIONS ARE IN INCHES TOLERANCES ARE:

DECIMALS	ANGLES	FINISH
.XX=± .015	± 1°	125
.XXX=± .005	± 1°	

REMOVE ALL BURRS & BREAK SHARP EDGES .005 TO .015

ORIGINATOR	TPL	12/10/92
CHECKED		
PROJ ENG		
APPROVED		
QA APPR		

INOVISION RADIATION MEASUREMENTS 8045 COCHRAN ROAD SOLON, OHIO 44139

TITLE SURGE SUPPRESSOR ASSEMBLY

SIZE	CAGE NO	DWG NO	REV
B	1JZH3	960SS-200-10	5

SCALE NONE DO NOT SCALE SHEET 1 OF 1

960SS-200 13

D S	ITEM	PART NO	QUAN.	DESCRIPTION

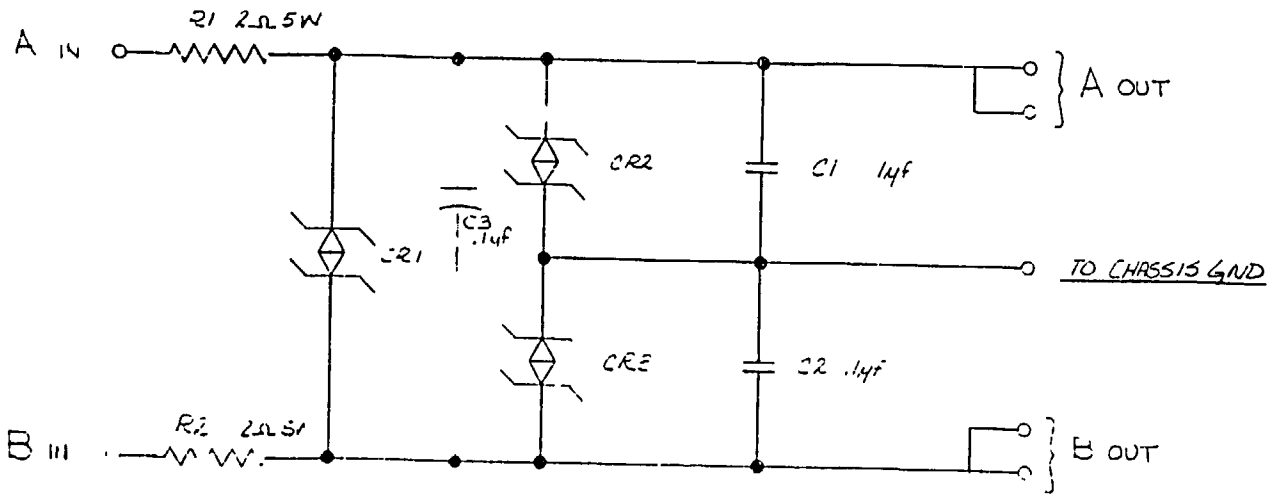

1. A & B MAY BE EITHER LINE OR NEUTRAL DEPENDING ON THE APPLICATION

NOTES: UNLESS OTHERWISE SPECIFIED

UNLESS OTHERWISE SPECIFIED DIMENSIONS ARE IN INCHES
TOLERANCES
FRACTIONAL DIMENSIONS ± 015
DECIMAL DIMENSIONS
XX = ± 015 - XXX = ± 005
ANGLES
ALL OTHER TOLERANCES PER VICTOREEN DWG NO 901775

NEXT ASS'Y	USED ON
960SS200-10	960SS-200-10

APPLICATION

REVISIONS

REV LET	DESCRIPTION	DATE
A	RELEASED FOR PROD. PER ECO # 1542[illegible]	1/1/52
B	REVISED PER ECO 15566	2/4/63

THIS DRAWING IS THE PROPERTY OF VICTOREEN, INCORPORATED. NEITHER THE DRAWING, NOR REPRODUCTIONS OF IT, NOR INFORMATION DERIVED FROM IT, IS TO BE GIVEN TO OTHERS. NO USE IS TO BE MADE OF IT WHICH IS, OR MAY BE INJURIOUS TO VICTOREEN, INCORPORATED.

NUCLEAR

VICTOREEN, INC.
10101 WOODLAND AVE CLEVELAND OHIO 44104

NAME SURGE SUPPRESSER SCHEMATIC

MATERIAL | FINISH

DRAWN	DATE	CHECKED	DATE	APP'D	DATE
M NEAL	10/22 62	T.A.J.	11/1/	RDH	11/1/62

SIZE	CODE IDENT	DWG NO
B	63060	960SS-200-13

SCALE NONE | SHEET 1 OF 1

SPECIFICATION
10 CONDUCTOR CABLE

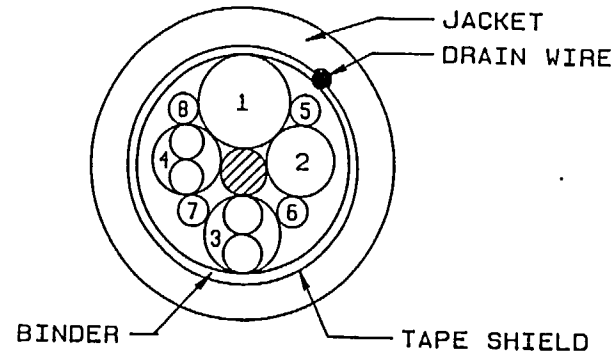

CONSTRUCTION:

2 Coaxial Cables:	1-RG58 C/U Type	1-RG59 B/U Type
a. Conductor:	#21 AWG 19/.0071 T/C	Solid .023" Copper covered steel 40% Conductivity
b. Insulation:	Irradiation Crosslinked Polyethylene .116" ± .004"	Irradiation Crosslinked Polyethylene .146" ± .004"
c. Shield:	#36 AWG T/C 90% Min. Cov. .150" Max.	#34 AWG B/C 90% Min. Cov. .191" Max.
d. Jacket:	Irradiation Crosslinked Polyolefin .195" ± .004"	Irradiation Crosslinked Polyolefin .242" ± .004"
e. Impedance:	50 ± 2 ohms	75 ± 3 ohms
f. Capacitance:	32 pf/ft. Nom.	21 pf/ft. Nom.

2 Pair: #18 AWG 7/.0152" stranded tinned copper insulated with a .030" nominal wall of irradiated crosslinked polyolefin.

Nom. O.D. .106"

Pair twisted with a 3.0" max.lay. Nom O.D. .212" (Major Axis)

4 Singles: #18 AWG 7/.0152" stranded tinned copper insulated with a .030" nominal wall of irradiated crosslinked polyolefin.

Nom. O.D. .106"

Conductor Identification:

Coaxial cables printed RG58 C/U Type and RG59 B/U Type on jacket:

1. RG59 B/U Type
2. RG58 C/U Type

Pairs:

3. Pair #1 Black, White
4. Pair #2 Red, Green

Single conductors:

5. Orange
6. Blue
7. White/Black
8. Red/Black

Filler Material: Flame retardant foam polypropylene as required.

Cabling: As per cross-sectional diagram with a 9.0" maximum lay.

Nom. O.D. .533"

Binder: .002" mylar wrap. Nom. O.D. .541"

SUGGESTED VENDORS:

FL SURPRENANT WIRE & CABLE
BOSTON INSULATED WIRE & CABLE

REV.	DESCRIPTION	DWN/DATE	CHK/DATE	ENG/DATE	APP/DATE	QA/DATE
D	REDRAWN & REV PER ECO 2CR12-89	CTP 2-27-89	MAP 3-15-89	3-22-89	DCS 3-22-89	3/30/89 M

SUPERCEDES:

VICTOREEN, INC.
6800 COCHRAN RD., SOLON, OH. 44139-3395

TOLERANCES UNLESS OTHERWISE SPECIFIED	OPTIONAL TOLERANCES IF SPECIFIED
.X .5	
.XX .03	
.XXX .015	
ANGLES ±1 DEGREE	DEGREE

INIT APPLICATION

DRAWING TITLE: CABLE, DETECTOR 10/CONDUCTOR

SIZE	DRAWING NUMBER	REV.
B	50-100-TAB	D

SHEET 1 OF 2 SCALE

SPECIFICATION (CONTINUED)

Drain Wire: #20 AWG 7/.0121" stranded tinned copper spiraled around cable and in contact with aluminum mylar tape shield.

Tape Shield: Aluminum mylar tape wrap with aluminum side facing in.
Nom. O.D. .547"

Jacket: .060" Nominal wall of hypalon per IPCEA S-19-81.

Finished O.D.: .667" ± .025"

Test Requirements

Inspection Test Voltage:

RG59 B/U Type:	5000 V RMS
RG58 C/U Type:	3500 V RMS
#18 AWG Condrs.:	2500 V RMS

Flame Test: Cable IEEE 383 70,000 BTU ribbon burner.

10/C Detector Cable

DESCRIPTION:

I. Coaxial Components:

	RG 58/U alt.	RG 59/u alt.
A. Conductors	19/.0071" T.C.	19/36 T.C.
B. Insulation	Crosslinked Polyethylene	Crosslinked Polyethylene
C. Flame Tape	Mica tape	Mica tape
D. Diameter under shield	.119"	.115"
E. Shield	#36 AWG 92% Coverage	#36 AWG 92% Coverage
F. Insulation wrap	.001" Mylar	.001" Mylar
G. Jacket type	Bostrad 7 (CSPE)	Bostrad 7 (CSPE)
H. Thickness, nom.	.015"	.015"
J. O.D., nom.	.181"	.217"
K. Impedance, nom.	50 Ohms	75 Ohms
L. Capacitance, nom.	32 pf/ft.	21 pf/ft.
M. Dielectric Strength(min)	5.0 KVAC for 1 min.	7.0 KVAC for 1 min.

II. Instrument Components:

A. Conductors	8x #18 AWG, 7/.0152" T.C.
B. Insulation (Each Cond.)	.020" Ethylene propylene rubber per IPCEA S-68-516 Interim #1
C. Insulation Covering (Each Conductor)	.010" Bostrad 7 (CSPE) per IPCEA S-19-81
D. Voltage Rating	300V

DESCRIPTION (CONTINUED)

III. Cable Assembly:

A. Sub-assembly	Twist 2 pairs #18 AWG
B. Final Assembly	Cable 2 coaxes, 2 twisted pairs, and 4 x #18 AWG leads around a glass filler core
C. Binder Tape	Flame retardant grade
D. Overall Shield	Aluminum/mylar tape with #20 AWG stranded T.C. drain wire
E. Overall Jacket	.060" Bostrad 7(CSPE)per IPCEA S-19-81
F. Outside Diameter, nom.	.675" + .015 − .035

TAB	OUTER JACKET (SOLID OR STRIPED)
50-100	BLACK
50-100-1	RED
50-100-2	GREEN

REV.	DESCRIPTION	DWN/DATE	CHK/DATE	ENG/DATE	APP/DATE	QA/DATE
D	REDRAWN & REV PER ECO 2CR12-89	CTP 2-27-89	MMP 3-13-89	ARA 3-13-89	DCB 3-14-89	3/20/89 M

SUPERCEDES:

VICTOREEN, INC.
6000 COCHRAN RD., SOLON, OH. 44139-3395

TOLERANCES UNLESS OTHERWISE SPECIFIED	OPTIONAL TOLERANCES IF SPECIFIED
.X .5	———
.XX .03	———
.XXX .015	———
✓ 125 ✓	✓
ANGLES +/-1 DEGREE	DEGREE

INIT APPLICATION

DRAWING TITLE: CABLE, DETECTOR 10/CONDUCTOR

SIZE	DRAWING NUMBER	REV.
B	50-100-TAB	D

SHEET 2 OF 2 SCALE

B	REV PER SCR18-94	3-18-94	BA

GEL 948B-1 | 1 | B

NOTES

1. CONSTRUCTION-16 GAUGE C R S
2. FINISH: ZINC PLATED PER ASTM B633-85 W/CLEAR CHROMATE DIP
3. SUGGESTED REAR SUPPORT-ATTACH EIA STRIP TO REAR MTG EARS AND SECURE USING #10 HARDWARE
4. ALTERNATE REAR SUPPORT-REMOVE REAR MTG EARS AND STRAP CHASSIS TOGETHER USING VIEW A-A DIMENSIONS AND #8 HARDWARE
5. APPROXIMATE WEIGHT-10LBS

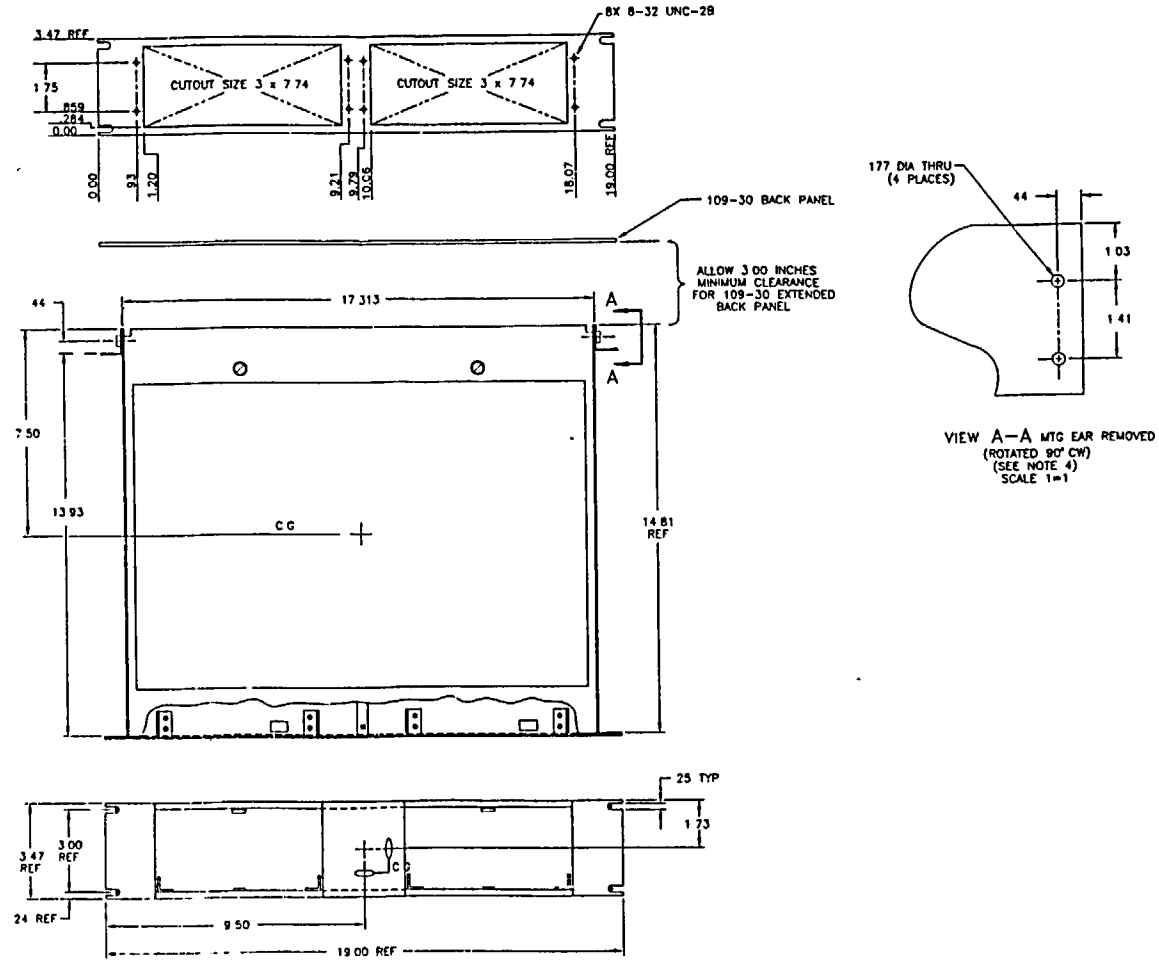

UNLESS OTHERWISE SPECIFIED DIMENSIONS ARE IN INCHES TOLERANCES ARE:

DECIMALS: .XX=± .015 ± .XXX=± .005 ± | ANGLES | FINISH

REMOVE ALL BURRS & BREAK SHARP EDGES .005 TO .015

COMPUTER GENERATED DRAWING

DWG NO: STD-278 | PART NAME: 948B-1

MATERIAL: 1

FINISH: 2

NEXT ASSEMBLY USED ON: WT 11-12-97

VICTOREEN, INC.
6000 COCHRAN RD., SOLON, OHIO 44139

TITLE: DIMENSIONAL OUTLINE 2 BAY CHASSIS

D 63060 | GEL 948B-1 | B

SCALE 1/2 | DO NOT SCALE | SHEET 1 OF 1

9488-1-5 | 1 | A

REV	DESCRIPTION	DATE	APPROVED
A	ORIGINAL ISSUE 11JR2-92	11-12-92	

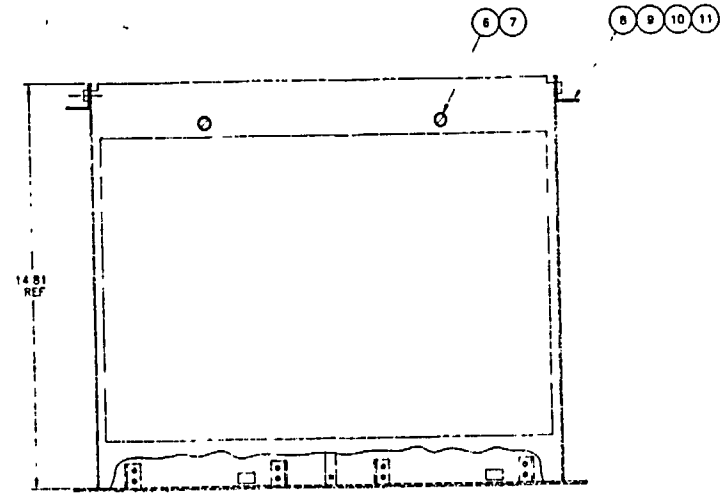

UNLESS OTHERWISE SPECIFIED DIMENSIONS ARE IN INCHES TOLERANCES ARE

DECIMALS ANGLES FINISH

REMOVE ALL BURRS & BREAK SHARP EDGES .005 ±

COMPUTER GENERATED DRAWING

SIS-2-8 9488-1-5

MATERIAL

FINISH

NEXT ASSEMBLY USED ON

WT

N/A

N/A

N/A

VICTOREEN, INC.
6000 COCHRAN RD., SOLON, OHIO 44139

TITLE
2 BAY CHASSIS ASSEMBLY

D,63060 9488--1--5 A

SCALE 1/2 DO NOT SCALE SHEET 1 OF 1

848-8-105

LTR	ECO NO.	APPROVED	DATE
4	22004	Original Signed By B. Smith	8/8/01

NOTES:

1.

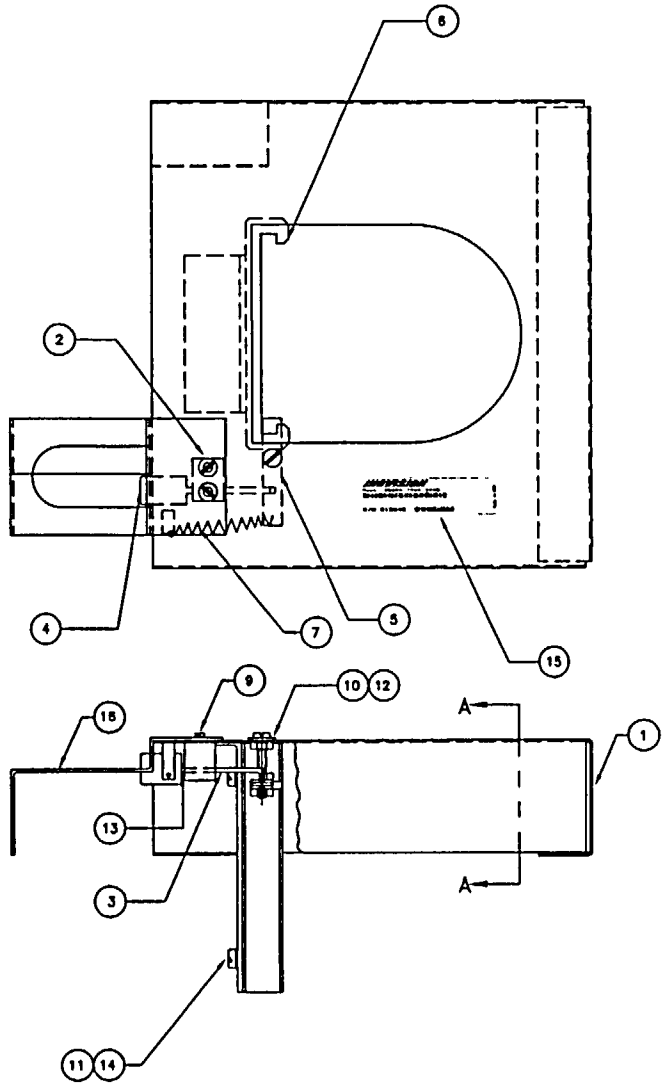

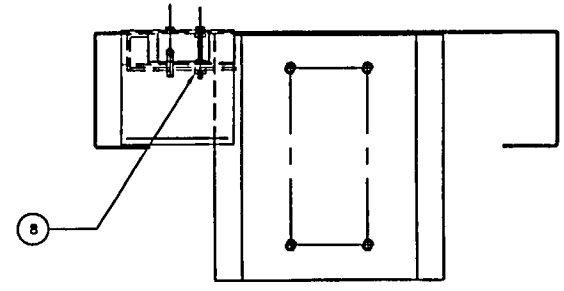

SECTION A–A

UNLESS OTHERWISE SPECIFIED DIMENSIONS ARE IN INCHES TOLERANCES ARE.
DECIMALS: .XX±.015 .XXX±.005
ANGLES: ±1° FINISH: 63
FRACTIONS: ±1/32
REMOVE ALL BURRS & BREAK SHARP EDGES .005 TO .015

DRAWN BY	Original Signed B. Bell	8/8/01
DESIGNED BY	Original Signed B. Wanner	8/8/01
ENGINEERING	Original Signed B. Bell	8/8/01
QA	Original Signed B. Smith	8/8/01

INOVISION INNOVATION MEASUREMENTS 8948 COCHRAN ROAD SOLON, OHIO 44139

TITLE
ASSEMBLY
FIELD CALIBRATION ADAPTER

SIZE	CAGE CODE	DWG NO.	REV
D	1JZH3	848-8-105	4

SCALE 1/1 DO NOT SCALE SHEET 1 OF 1

Product Structure

Product No: S157033A1 DUCT ADAPTER ASSEMBLY
Rev: 002 ECN: 2014
Drawing Number: S157033A1

Item No.	Product Number	DrawingNo.	Siz	Description	Quantity	ECN	Rev	Obs	Act
1	S157033A11	S157033A11	D	DUCT ADAPTER FABRICATION	1.000 EA	1740	1	N	Y
2	S157033A12	S157033A12	D	DETECTOR MTG. FABRICATION	1.000 EA	1740	1	N	Y
3	S157033A13	S157033A13	C	GASKET - DUCT ADAPTOR PLATE	1.000 EA	1748	1	N	Y
4	857-10-7			GASKET, 2.0 SQ X .031 THK	1.000 EA	1590	2	N	Y
5	857-10-22			SCREW,SEEL,PH 6-32 SLOT .50 SS	4.000 EA	1590		N	Y
6	31-63	NONE	PN	CONNECTOR, BULKHEAD	1.000 EA	1686	1	N	Y
7	50-100			CABLE, COAX, 10/C, DETECTOR	2.000 FT	1590	4	N	Y
8	92-7005-9A	PER PRINT	D	CLAMP	1.000 EA	1587	8	N	Y
9	92-7005-12A	PER PRINT	D	BUSHING	2.000 EA	1587	8	N	Y
10	92-7005-17A	PER DWG	D	CONNECTOR, FEMALE	1.000 EA	1587	8	N	Y
11	5-1001			SCREW, CAP, H, .25-20 X .75	4.000 EA	1590		N	Y
12	5-822			WASHER, SPLIT, .25, SS	12.000 EA	1590		N	Y
13	5-858			NUT, HEX, .25-20, SS	12.000 EA	1590		N	Y
14	5-842			WASHER, FLAT, .25, SS	4.000 EA	1590		N	Y
15	5-1307			NUT, 1/4-20, 316SS	8.000 EA	1590	2	N	Y
16	5-1308			STUD, 1/4-20, 316SS	8.000 EA	1590	2	N	Y
17	MSJ-4325			SEALANT, LOCTITE, GRADE A	.010 EA	1590	1	N	Y

*** END OF REPORT ***

Product Structure

Product No: S157033A2 FILTER/SURGE SUPPRESSOR
Rev: 001 ECN: 1740
Drawing Number: S157033A2

Item No.	Product Number	DrawingNo.	Siz	Description	Quantity			ECN	Rev	Obs	Act
1	92-9015-A			FILTER POWER LINE	2.000	EA		1590	5	N	Y
2	960SS-200	PER BOM	BM	SURGE SUPPRESSOR	2.000	EA	PS	1744	3	N	Y
3	92-7041-2A	92-7041-2A	B	12 POLE BARRIER STRIP WITH	1.000	EA	PS	1625	3	N	Y
4	92-7044-A			FUSE BLOCK,2 POSITION	2.000	EA		1590	1	N	Y
5	S157033A21	S157033A21	D	CHASSIS, PROCESSED	1.000	EA		1740	1	N	Y
6	MSB-0071-1			WIRE, HOOK-UP, 18 AWG, WHITE	.000	FT		1590	1	N	Y
7	MSB-0071-2			WIRE, HOOK-UP, 18 GA, BLACK	.000	FT		1590	1	N	Y
8	MSB-0071-4			WIRE, HOOK-UP, 18 AWG, GREEN	.000	FT		1590	1	N	Y
9	36-86			TERM, LUG, CRIMP, 22-16, #6-8	36.000	EA		1590	1	N	Y
10	19-2			FUSE, 2A 250V, 3AG	4.000	EA		1590	1	N	Y
11	57-112			TERMINAL STRIP, 6 POINT	1.000	EA		1590	1	Y	Y
12	S157033A-105	PER PRINT	C	SCHEMATIC, SURGE SUPPRESSOR	1.000	EA		1740	1	N	Y
13	5-268			SCREW, MACH, FH, 6-32 X .31,	4.000	EA		1590		N	Y
14	5-389			SCREW, MACH, PH, 8-32 X 1.12,	4.000	EA		1590		N	Y
15	5-266			SCREW, MACH, FH, 6-32 X .25,	6.000	EA		1590		N	Y
16	5-852			NUT, HEX, 6-32, SS, SM	24.000	EA		1590		N	Y
17	39-106			STANDOFF, M/F, 6-32 X .25, HEX	8.000	EA		1590	1	N	Y
18	5-838			WASHER, FLAT, 6, SS	24.000	EA		1590		N	Y
19	14-235	NONE	PN	FERRITE CUBE	2.000	EA		1686	1	N	Y
20	5-837			WASHER, SPLIT, 6, SS	22.000	EA		1590		N	Y
21	5-824			WASHER, FLAT, 8, SS	4.000	EA		1590		N	Y
22	5-794			WASHER, SPLIT, 8, SS	4.000	EA		1590		N	Y
23	5-825			NUT, HEX, 8-32, SS	4.000	EA		1590		N	Y
24	5-713			WASHER,FLAT,8,N,NAT	4.000	EA		1590		N	Y
25	5-282			SCREW, MACH, FH, 6-32 X .50,	4.000	EA		1590		N	Y
26	5-200			SCREW, MACH. FH, 4-40 X .44,	2.000	EA		1590		N	Y
27	5-836			WASHER, SPLIT, 4, SS	2.000	EA		1590		N	Y
28	5-833			WASHER, FLAT, 4, SS	2.000	EA		1590		N	Y
29	5-850			NUT, HEX, 4-40, SS, SM	2.000	EA		1590		N	Y
30	5-261			SCREW, MACH, PH, 6-32 X .25,	8.000	EA		1590		N	Y
31	67-81-4S			CONNECTOR, 4 PIN, CIRC, CABLE	2.000	EA		1590	1	N	Y
32	67-82-4			CONNECTOR, SHELL/CLAMP	2.000	EA		1590	3	N	Y
33	67-83-3S			CONNECTOR INSERT,F,18-16 WIRE	6.000	EA		1590	3	N	Y
34	61-1			HARNESS TIE PANDUIT MINIATURE	24.000	EA		1590	1	N	Y
35	SM-2202			SLEEVE, SPIRAL-WRAP .06"-.5"OD	.001	FT		1590		N	Y
36	36-10			TERM, LUG, SOLDER, LOCK EYELET	2.000	EA		1590		N	Y
37	200-135	200-135	B	NAME TAG	1.000	EA	PS	1840	6	N	Y
38	61-5		PN	HARNESS TIE PANDUIT MINIATURE	2.000	EA		1352	1	N	Y
39	TPS157033A2	PER TP	TP	TP FOR S157033A2 FILTER/SERGE	.000	EA		1740	1	N	Y
40	WLS157033A2	PER WL	WL	ASSEMBLY WIRE LIST FOR	.000	EA		1740	1	N	Y

*** END OF REPORT ***

Product Structure

Product No: 960SS-200-10 SURGE SUPPRESSOR ASSEMBLY
Rev: 005 ECN: 11CR16-99
Drawing Number:

Item No.	Product Number	DrawingNo.	Siz	Description	Quantity	ECN	Rev	Obs	Act
	92-1088-A			RESISTOR, 2, 5W	2.000 EA	1590	2	N	Y
		Loc: R1,2							
	92-3047-A			CAPACITOR,.1 UF	3.000 EA	1590	1	N	Y
		Loc: C1-3							
	92-6035-A			DIODE, VARISTOR, 130V AC	3.000 EA	1590		N	Y
		Loc: CR1-3							
	960SS-200-12			SILKSCREEN,SURGE SUPPRESSOR P.	1.000 EA	1590		N	Y
	960SS-200-13			SCHEMATIC,SURGE SUPPRESSOR	1.000 EA	1590		N	Y
	960SS-200-14			SOLDER MASK,SURGE SUPPRESSOR	1.000 EA	1590		N	Y
2	960SS-200-11			CIRCUIT BOARD PROCESSED	1.000 EA	1590	2	N	Y
5	MSA-0007			SOLDER, CORE, 60/40, .031 DIA	.001 LB	1303	2	N	Y
6	MSB-0071-4			WIRE, HOOK-UP, 18 AWG, GREEN	.001 FT	1590	1	N	Y
7	92-7043-A	NONE	PN	TERMINAL,LUG,RING,22-16AWG,RED	1.000 EA	1622	5	N	Y
12	GT2			PRINTED CIRCUIT BD TRAVELLERS	1.000 EA	1590	2	N	Y
13	MSJ-4367			INK, EPOXY, WHITE	.001 QT	1590		N	Y
14	TP960SS-200-10			TEST PROCEDURE,SURGE SUPPR BD	.001 EA	11CR16-99	1	N	Y

*** END OF REPORT ***

VICTOREEN, INC.
COMPONENT BILL OF MATERIAL
DESC: ASSEMBLY, 2 BAY CHASSIS

REV: A
ECN: 11JR2-92

ITEM NBR.	PART NUMBER	DESCRIPTION	QUANTITY		ECN
1	948B-1-3	CHASSIS, 2 BAY, AREA MONITOR LOC:	1.000	EA	11JR2-92
2	844-7-7	GUIDE LOC:	4.000	EA	11JR2-92
3	5-189	SCREW, MACH, FH, 4-40 X .31, LOC:	8.000	EA	11JR2-92
4	846-1-33	BRACKET NUT LOC:	4.000	EA	11JR2-92
5	948-1-6	ADJUSTABLE WEDGE LOC:	2.000	EA	11JR2-92
6	5-261	SCREW, MACH, PH, 6-32 X .25, LOC:	2.000	EA	11JR2-92
7	5-837	WASHER, SPLIT, 6, SS LOC:	2.000	EA	11JR2-92
8	948-1-4	RACK CHASSIS REAR MOUNT BRACKE LOC:	2.000	EA	BM 11JR2-92
9	5-361	SCREW, MACH, PH, 8-32 X .38, LOC:	4.000	EA	11JR2-92
10	5-794	WASHER, SPLIT, 8, SS LOC:	4.000	EA	11JR2-92
11	5-825	NUT, HEX, 8-32, SS LOC:	4.000	EA	11JR2-92

DWN/DATE	CHK/DATE	ENG/DATE	APP/DATE	GA/DATE
11-18-92	N/A	11-30-92	N/A	12/3/92

Product Structure

Product No: 848-8-105 ASSEMBLY FIELD CALIBRATION
Rev: 004 ECN: 2004
Drawing Number: 848-8-105

Item No.	Product Number	DrawingNo.	Siz	Description	Quantity			ECN	Rev	Obs	Act
1	848-8-106			ADAPTER HOUSING	1.000	EA		1590		N	Y
2	848-8-108			GUIDE BLOCK, PROCESSED	1.000	EA		1590		N	Y
3	848-8-109			ACTUATOR ARM	1.000	EA		1590		N	Y
4	848-8-112			CAM FOLLOWER	1.000	EA		1590		N	Y
5	848-8-113			LOCK BAR	1.000	EA		1590	1	N	Y
6	848-8-114			SUPPORT,DETECTOR	1.000	EA		1590		N	Y
7	12-36	NONE	PN	EXTENTION SPRING .1880D/.72LG	1.000	EA		1759	2	N	Y
8	43-1			WASHER, EXTRUDED, .141ID/.250D	2.000	EA		1590		N	Y
9	5-261			SCREW, MACH, PH, 6-32 X .25,	2.000	EA		1590		N	Y
10	5-297			SCREW, MACH, BH, 6-32 X .88,	1.000	EA		1590		N	Y
11	5-352			SCREW, MACH, PH, 8-32 X .31,	4.000	EA		1590		N	Y
12	5-852			NUT, HEX, 6-32, SS, SM	3.000	EA		1590		N	Y
13	5-848	NONE	PN	NUT, HEX, 2-56, SS	1.000	EA		1419	1	N	Y
14	5-767			WASHER, INT, 8, S, CP	4.000	EA		1590		N	Y
15	200-135	200-135	B	NAME TAG	1.000	EA	PS	1840	6	N	Y
16	848-8-3086			KEY GUIDE ASS'Y	1.000	EA		1590	1	N	Y

*** END OF REPORT ***

Appendix B
CALIBRATION PROCEDURES AND DATA

B.1 CALIBRATION PROCEDURES AND DATA

Appendix B contains all radiation calibration procedures and resulting data for Detectors to be provided under the contract as well as the 848-8A Field Calibration data. Note that this information is provided as baseline data for both the detectors and the calibrator. It is not intended that these procedures be performed on-site.

Procedures

CAL-GM6	Range Calibration Procedure for 897A Series Detectors
CAL848-8AD	Field Calibrator Calibration Procedure – Digital

Data Sheets

CAL-GM6	Data Sheets for 897A-210 s/n 131, 132 and 100762
CAL848-8AD	Data Sheets for 848-8AD s/n 101364

VICTOREEN, INC. TITLE: 897A GM DETECTOR FACTORY CALIBRATION PROCEDURE CUSTOMER: N/A DOCUMENT: CAL-GM6 REV. A	PAGE 1 OF 14

ISSUE DATE: NOVEMBER 13, 1995

REVISION LIST

REV	ECO #	
A	9CR28-95	

APPROVAL

TECHNICAL SUPPORT MANAGER	[illegible]	11/15/95
QUALITY ASSURANCE	[illegible]	11/17/95
CALIBRATION SUPERVISOR	Tom Kraus	11/16/95

ISSUED BY: D. WARNER

FILE COPY

VICTOREEN, INC.
TITLE: 897A GM Detector Factory Calibration Procedure
CUSTOMER: N/A
DOCUMENT: CAL-GM6 REV. A

DOCUMENT REV. LEVEL	DESCRIPTION/PAGES AFFECTED
A	ORIGINAL ISSUE

TABLE OF CONTENTS

1.0 PURPOSE

The purpose of this procedure is to provide detector specific calibration data and to insure the detector performance is within stated tolerances.

2.0 SCOPE

2.1 To develop calibration data for the 897A series detector so that parameters can be determined for use with the 960 based Digital Area Monitor or 956 Series Area Monitor Readouts and to set or verify the detector's anti-jam function. In addition, the performance of 897A series detectors used with Analog Area Monitors or provided as replacements will be verified.

2.2 The parameters that will be determined by this procedure are:

- Conversion Constant
- Dead Time Correction
- Background Countrate
- Linearity
- Check source response with conversion constant entered

3.0 RESPONSIBILITIES

3.1 Personnel performing this procedure must have a skill level per S.O.P. 902.003 of Level 1 and be an approved user of the radiation facilities utilized in this procedure.

3.2 QA has the responsibility to insure that this procedure is properly implemented and that all data is reviewed and approved prior to movement of material to the next work station. In addition, Q.A. shall retain copies of all data generated in a job file for the detector(s) calibrated.

4.0 ENVIRONMENTAL CONDITIONS

4.1 Environmental conditions for temperature and humidity shall be the prevailing laboratory ambient.

5.0 EQUIPMENT REQUIRED

5.1 #2 Phillips screwdriver.

5.2 Completed and signed TP897A Data Sheets for detectors to be calibrated.

5.3 956A-201 Digital Readout Module, must be calibrated.

5.4 Calibrated Source Ranges (TRI-SOURCE or SICR).

5.5 Computer and Disc containing program 94085701 Rev. B for GM Area Monitors.

5.6 Mounting Fixtures for detectors in TRI-SOURCE and SICR as required.

5.7 956A-201 to 897A series detector - 20 ft. minimum length.

5.8 Digital Voltmeter: Fluke 8050A or equivalent - must be a calibrated device.

5.9 Data Sheets. (Sample attached. These sheets delineate the minimum recording requirements; computer data sheets must contain the same minimum information.

5.10 Oscilloscope: 50 Mhz - must be a calibrated device and be equipped with a X10 probe.

6.0 REFERENCES

6.1 Procedure CAL-TRI-SOURCE.

6.2 Procedure CAL-SICR.

6.3 955A-1-1: Instruction manual for ratemeter and detector.

7.0 PROCEDURE

7.1 Configure 956A-201 ratemeter shown in Table 1.

TABLE 1

Detector Type	High Voltage	Low Disc.	High Disc.
897A-210, 897A-211, 897A-220 and 897A-221	575	0.500	7.00
897A-230 and 897A-231	550	0.500	7.00

NOTE

Anti-jam function on the 956A-201 used for calibration should be disabled by removing Jumper JP7 and placing JP6 in the 2 - 3 position.

7.2 Mount detector in TRI-SOURCE using Adaptor Fixture and allow 15 minute warm-up period for detector and all electronics prior to data collection. Adjust Table height so that the laser spot is located on the detector housing as shown in Figure 1.

7.3 Remove and retain the screws holding the detector assembly into the housing along with the plastic washers.

7.4 Connect the oscilloscope to center pin of signal input jack P5 on the 956A-201 using a X10 probe. The probe ground lead should be connected to the P5 grounding lug. Set the oscilloscope trigger to "AUTO", vertical gain to 1 volt/division, coupling to "DC" and a sweep rate of 5 microseconds/division.

7.5 Using the TRI-SOURCE in accordance the instructions in Procedure CAL-TRI-SOURCE, expose the detector to the dose rate as given in Table 2 for anti-jam adjustment. Adjust potentiometer R41 on the detector circuit board in increments of 1/4 turn counter-clockwise until the oscilloscope just begins to show symmetrical anti-jam output square wave adjustment. Stop adjustment.

TABLE 2

DETECTOR TYPE	REQUIRED FIELD INTENSITY
897A-210 897A-211	3.09E3 to 3.22E3 mR/h
897A-220 897A-221	3.07E4 to 3.20E4 mR/h
897A-230 897A-231	2.45E5 to 2.55E5 mR/h

7.6 Place the 956A-201 function switch in position 8 (Calibrate Mode) and enter a 60 second count time. When the backlight legends cease flashing, record the anti-jam count rate on the Data Sheet. A minimum count value of 2.40E6 is required for this step.

7.7 Using the Calibration Sources in accordance with instructions in procedures CAL-TRI-SOURCE and CAL-SICR, expose the detector in accordance with Tables 3, 4, or 5 depending on detector type. Begin counting only after the source if fully open or raised. Count times should be adjusted for a minimum of 10,000 counts or a maximum of five minutes counting time -- whichever occurs first.

7.8 Using computer and program 94085701 Rev. B, enter NET count rates to determine Dead Time Correction value and Conversion Constant and record on Data Sheet. Attach print-out to Data Sheet. Acceptance Criteria is a value of less than 20% for linearity error. If information is available, enter Customer, S.O. Number, etc., into 94085701 program along with operator and detector model and serial numbers.

7.9 Place the 956A-201 function switch in position 5 and enter the Conversion Constant (CC1). Move the function switch to position 2 and enter the Deadtime (TAU) value. These values were determined in Step 7.8 and should be rounded to three significant digits for entry.

7.10 With the calibrator source lowered and all alternators lowered, activate the check source push-button on the 956A-201 ratemeter. Record the check source mR/h response on the Data Sheet when the displayed value has stabilized.

7.11 Sign completed Data Sheet and traveler step at the completion of the calibration if all values are within tolerance. Reject any detectors that have failed this procedure and forward along with copies of the data taken to the Production or Repair Department as appropriate.

7.12 Reinstall the six screws and flat washers removed in Step 7.3 that retain the detector into the housing.

8.0 DOCUMENTATION

8.1 Computer generated Data Sheets are used for Source Range and Set-up Data. A legible copy of the Curve Fit printout shall be attached to the Data Sheet. A copy of these data sheets will be forwarded to the Staff Physicist.

8.2 When a detector is accepted into stock, the Data Sheets shall remain with the detector.

8.3 When a detector is assigned to a job, the Traveler (if applicable) shall be completed with the P.O. number and any other appropriate customer identification.

8.4 When a job is shipped, records shall be retained by QA appropriately filed and microfilmed.

TABLE 3: To be used with 897A-230 and 897A-231 Detectors

CALIBRATION POINT	MINIMUM FIELD STRENGTH	MAXIMUM FIELD STRENGTH
#1	9.50E4 mR/hr	1.00E5 mR/hr
#2	3.00E4 mR/hr	4.00E4 mR/hr
#3	9.50E3 mR/hr	1.20E4 mR/hr
#4	3.00E3 mR/hr	4.00E3 mR/hr
#5	9.50E2 mR/hr	1.20E3 mR/hr
#6	3.00E2 mR/hr	4.00E2 mR/hr
#7	9.50E1 mR/hr	1.20E2 mR/hr
#8	3.00E1 mR/hr	4.00E1 mR/hr

TABLE 4: To be used with 897A-220 and 987A-221 Detectors

CALIBRATION POINT	MINIMUM FIELD STRENGTH	MAXIMUM FIELD STRENGTH
#1	9.50E3 mR/hr	1.00E4 mR/hr
#2	3.00E3 mR/hr	4.00E4 mR/hr
#3	9.50E2 mR/hr	1.20E3 mR/hr
#4	3.00E2 mR/hr	4.00E2 mR/hr
#5	9.50E1 mR/hr	1.20E2 mR/hr
#6	3.00E1 mR/hr	4.00E1 mR/hr
#7	9.50E0 mR/hr	1.20E1 mR/hr
#8	3.00E0 mR/hr	4.00E0 mR/hr
#9	9.50E-1 mR/hr	1.20E0 mR/hr

TABLE 5: To be used with 897A-210 and 897A-211 Detectors

CALIBRATION POINT	MINIMUM FIELD STRENGTH	MAXIMUM FIELD STRENGTH
#1	9.50E2 mR/hr	1.00E3 mR/hr
#2	3.00E2 mR/hr	4.00E2 mR/hr
#3	9.50E1 mR/hr	1.20E2 mR/hr
#4	3.00E1 mR/hr	4.00E1 mR/hr
#5	9.50E0 mR/hr	1.20E1 mR/hr
#6	3.00E0 mR/hr	4.00E0 mR/hr
#7	9.50E-1 mR/hr	1.20E0 mR/hr

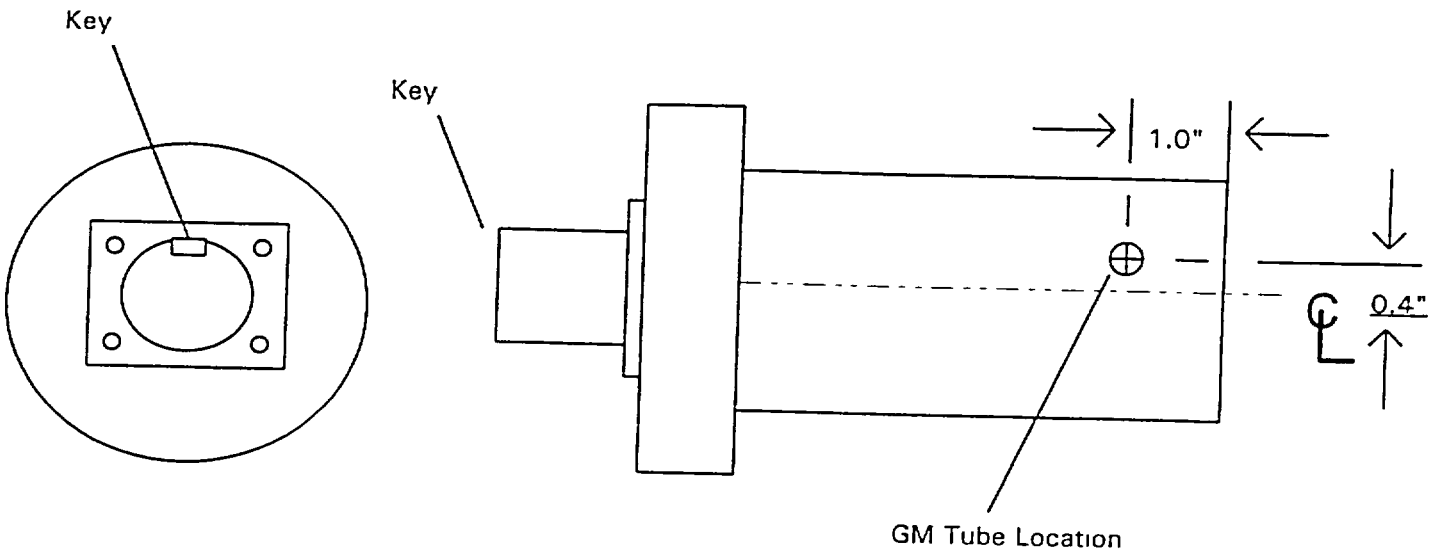

FIGURE 1

VICTOREEN, INC.
TITLE: 897A GM Detector Factory Calibration Procedure
CUSTOMER: N/A
DOCUMENT: CAL-GM6 REV. A

Sample 897A-21X Detector Data Sheet

Customer: _____ P.O. No.: _____

Project: _____ W.O. No.: _____

S.O. No.: _____

Detector Model No.: 897A-21_____ Serial No.: _____ Tag No.: _____

Readout Model No.: 956A-201_____ Serial No.: _____ Cal Date: _____

7.5 Anti-jam Dose Rate _____ mR/h (Actual)

7.6 Anti-Jam Duty CPM _____ (2.40E6 Minimum)

7.7 Range Data

Intensity (mR/h)	Position & No. of Attenuators	Count Time (Seconds)	Accumulated Counts	Gross Counts (cpm)	Net Count Rate (cpm)
S.I.C.R. CALIBRATION INFORMATION					
Background	_____	_____	_____	_____	_____
_____	_____	_____	_____	_____	_____
_____	_____	_____	_____	_____	_____
_____	_____	_____	_____	_____	_____
TRI SOURCE CALIBRATION INFORMATION					
_____	_____	_____	_____	_____	_____
_____	_____	_____	_____	_____	_____
_____	_____	_____	_____	_____	_____
_____	_____	_____	_____	_____	_____
_____	_____	_____	Anti-Jam	_____	(2.40E6 Min.)

7.8 Conversion Constant: _____ Dead Time Correction: _____

Linearity Error < 20% _____ (Yes)

7.9 Check Source Response: _____ mR/h (100 mR/h, Minimum)

Conducted By: _____ Calibration Date: _____

Q. A. Review By: _____ Date: _____

VICTOREEN, INC.
TITLE: 897A GM Detector Factory Calibration Procedure
CUSTOMER: N/A
DOCUMENT: CAL-GM6 REV. A

Sample 897A-22X Detector Data Sheet

Customer: _____ P.O. No.: _____

Project: _____ W.O. No.: _____

S.O. No.: _____

Detector Model No.: 897A-22 _____ Serial No.: _____ Tag No.: _____

Readout Model No.: 956A-201 _____ Serial No.: _____ Cal Date: _____

7.5 Anti-jam Dose Rate _____ mR/h (Actual)

7.6 Anti-Jam Duty CPM _____ (2.40E6 Minimum)

7.7 Range Data

Intensity (mR/h)	Position & No. of Attenuators	Count Time (Seconds)	Accumulated Counts	Gross Counts (cpm)	Net Count Rate (cpm)
S.I.C.R. CALIBRATION INFORMATION					
Background	_____	_____	_____	_____	_____
_____	_____	_____	_____	_____	_____
_____	_____	_____	_____	_____	_____
_____	_____	_____	_____	_____	_____
TRI SOURCE CALIBRATION INFORMATION					
_____	_____	_____	_____	_____	_____
_____	_____	_____	_____	_____	_____
_____	_____	_____	_____	_____	_____
_____	_____	_____	_____	_____	_____
_____	_____	_____	Anti-Jam	_____	(2.40E6 Min.)

7.8 Conversion Constant: _____ Dead Time Correction: _____

Linearity Error < 20% _____ (Yes)

7.9 Check Source Response: _____ mR/h (100 mR/h, Minimum)

Conducted By: _____ Calibration Date: _____

Q. A. Review By: _____ Date: _____

VICTOREEN, INC.
TITLE: 897A GM Detector Factory Calibration Procedure
CUSTOMER: N/A
DOCUMENT: CAL-GM6 REV. A

Sample 897A-23X Detector Data Sheet

Customer: _____ P.O. No.: _____

Project: _____ W.O. No.: _____

S.O. No.: _____

Detector Model No.: 897A-23 _____ Serial No.: _____ Tag No.: _____

Readout Model No.: 956A-201 _____ Serial No.: _____ Cal Date: _____

7.5 Anti-jam Dose Rate _____ mR/h (Actual)

7.6 Anti-Jam Duty CPM _____ (2.40E6 Minimum)

7.7 Range Data

Intensity (mR/h)	Position & No. of Attenuators	Count Time (Seconds)	Accumulated Counts	Gross Counts (cpm)	Net Count Rate (cpm)
S.I.C.R. CALIBRATION INFORMATION					
Background	_____	_____	_____	_____	_____
_____	_____	_____	_____	_____	_____
_____	_____	_____	_____	_____	_____
_____	_____	_____	_____	_____	_____
TRI SOURCE CALIBRATION INFORMATION					
_____	_____	_____	_____	_____	_____
_____	_____	_____	_____	_____	_____
_____	_____	_____	_____	_____	_____
_____	_____	_____	_____	_____	_____
_____	_____	_____	Anti-Jam	_____	(2.40E6 Min.)

7.8 Conversion Constant: _____ Dead Time Correction: _____

Linearity Error < 20% _____ (Yes)

7.9 Check Source Response: _____ mR/h (100 mR/h, Minimum)

Conducted By: _____ Calibration Date: _____

Q. A. Review By: _____ Date: _____

VICTOREEN, INC.
TITLE: 897A GM Detector Factory Calibration Procedure
CUSTOMER: N/A
DOCUMENT: CAL-GM6 REV. A

Detector Curve Fit Program -- GM Area Monitors

94085701 Revision B

Model No.: _____ Serial No.: _____

Data From Calibration Range

Field mR/hr	CPM	Calc Field	% Deviation

CCI = _____ TAU = _____

Root sum of the squares of the deviation is _____

Background CPM: _____ Date Calibrated: _____

Calibrated By: _____ Customer: _____

S.O. No.: _____ Customer Tag No.: _____

Calibration Procedure for
Model 848-8 Field Calibrator -- Digital

FILE COPY

REV. LEVEL	ECO #	DESCRIPTION/PAGES AFFECTED
4	2069	Revise CLOSED and OPEN distances to envelope older calibrators with reduced activity.
3	1957	Revised to incorporate current Tri-Source NIST traceable points.
B	12CR12-97	Revised Data Analysis Sheets to improve usability. Revised Tri-Source points to utilize 20 Ci Cs-137 Source with a maximum of two attenuators. Revise 977 Response Tolerance for new sources.
A	5JR7-95	Adapted from CAL848-8 for use with readouts only, and incorporate new Tri-Source values, use of Digital Readout Electronics, and acceptance criteria.

ENGINEERING		DATE 5/18/01
CALIBRATION LABORATORY DIRECTOR		DATE 5/01/01
QUALITY ASSURANCE		DATE 5/23/2001
RADIATION SAFETY OFFICER		DATE 5/21/01

Inovision Radiation Measurements			DATE 5/18/01		TITLE Calibration Procedure for Model 848-8 Field Calibrator – Digital	
REV 4	ECO NO. 2069	RELEASED FOR PRODUCTION	DOC CTRL	SHEET 1 of 9	NO. CAL848-8D	SIZE CAL

1 PURPOSE

1.1 The purpose of this procedure is to provide the customer with calibrated baseline dose rate data for the Model 848-8 Field Calibrator.

1.2 This procedure defines the methodology for determining the actual dose rate, within +/- 10%, for the CLOSED, INTERMEDIATE and OPEN positions on the Model 848-8 Field Calibrators. For field use, this error should be combined with the overall detector accuracy and the statistical accuracy of the displayed value.

2 SCOPE

2.1 This procedure applies to the 848-8 Field Calibrator, when used with the following detectors:

Model 857-2XA	GM Detector for Salem Digital Application
Model 897-XXX	GM Detector used with 956 Series or Model 960 Readout
Model 897A-XXX	GM Detector used with 956 Series or Model 960 Readout
Model 977-2XX	Ion Chamber Detector used with 946 Series or Model 960 Series Readout
Model 857A-XX	GM Detector for Korea Digital Application

NOTE
When using the Calibrator with a Model 897A-XIX, Low Range Detector, the open position will overrange the unit, and should not be used.

2.2 Each 848-8 Calibrator will be provided with Calibration Data for use with the Digital Application GM and 977-XXX Ion Chamber type detectors. When required by Sales or Repair Order, this procedure may also be used to obtain calibration data for the 848-8 calibrator with Digital Application GM stainless steel detectors. Unless otherwise required by customer, data for the 897A-220 GM Detector and 977-2XX Ion Chamber Detector will be provided. Note that the GM Detectors require the use of an adapter insert, P/N 848-8-105, in the 848-8. For GM Detectors with stainless steel housings, adapter P/N 848-8-400 is also required.

2.3 In the field, reproducibility of the baseline data expected is +/- 20% of the decay corrected field for 977 Detectors and +/- 25% of the decay corrected field for 897 detectors. This tolerance shall be applied to each of the open and closed calibrator positions for each detector/calibrator geometry. For the intermediate position, a tolerance of +/- 25% and +/- 30% is expected for the 977 and 897 detectors, respectively. This tolerance includes detector accuracy, detector/calibrator geometry, calibrator mechanical tolerances and counting statistics. The tolerance assumes the operator is consistent in his use of the calibrator, and averaging of the Digital Display Value.

If the detector response is not within this tolerance, the detector should be removed from service, and a factory range calibration should be performed on the detector The field calibrator is designed to verify detector operation, and should not be used to modify correction factors determined in primary calibration.

Customers should note that damage to the 848-8, calibrator or the 848-8-105 and 848-8-400 adapters, missing calibrator hardware or rough handling may affect field dose-rate values.

The 848-8 calibrator electrically isolates the 977 series ion chamber from ground to prevent ground loops from occurring. If the insulating channel or plastic dome nuts are missing, this function is compromised and may result in erratic detector operation due to grounding of the detector through the 848-8 if on a grounded platform or work surface.

3 RESPONSIBILITIES

3.1 The Calibration Department shall perform the calibration procedure and the data reduction.

3.2 The R.S.O. or Staff Physicist shall review the data and calculations and retain a copy of completed data for their files.

3.3 Quality Assurance shall review all data for completeness and this procedure. In addition, Q.A. shall retain copies of data generated in a job file.

4 EQUIPMENT REQUIRED

4.1 848-8 Field Calibrator (loaded with ^{137}Cs source capsule), source manufacturer Data Sheet with serial number and activity of source.

4.2 848-8-105 Adapter (use customer's if purchased or Victoreen Test Unit if one is not purchased) GM Detector use only.

4.3 848-8-400 Adapter. To be used with stainless steel GM detectors only.

4.4 Victoreen Tri-Source Facility.

4.5 Model 977 Series Detector (Victoreen Test Unit), calibrated.

4.6 Model 946 Series Readout (Victoreen Test Unit), calibrated.

4.7 Model 897A-220, 897-220 or 857A-2XX series Detector (Victoreen Test Unit), calibrated.

4.8 Model 956A-100/200 Readout (Victoreen Test Unit), calibrated.

4.9 Data Sheet (Sample attached. These sheets delineate the minimum recording requirements; other Data Sheets may be used as long as the minimum information is recorded.)

4.10 857 Digital Interface adapter (for use with 857 Detectors only).

4.11 Model 857-20A or 857-21A if to be supplied to Salem for digital area monitor applications.

5 REFERENCES

5.1 Victoreen CAL-TRI SOURCE, "Tri-Source with Multi-Attenuator Attachment".

5.2 Victoreen Procedure "CAL-GM1".

5.3 Operating Manual for 848-8 Field Calibrator (part number 848-8-1).

5.4 Victoreen CAL-ION2, "977 Series Ion Chamber Calibration".

6 PRECAUTIONS

The Model 848-8 Field Calibrator and the Tri-Source Facility produce a high radiation field Proper monitoring and operations must be observed at all times

6.1 Personnel monitoring shall be worn when performing this procedure. Wear the whole body dosimeter between the waist and collar.

6.2 Notify the R.S.O. if the calibration is to be performed outside the Tri-Source room, so that a survey can determine where radiation fields exceed 2 mR/h. Insure the access control of the area is maintained to prevent inadvertent exposure of personnel.

6.3 Stand behind the field calibrator when performing all operations. Keep fingers out of radiation beam.

6 4 Return the source to the "closed" position when not collecting data.

6.5 Remove the key from the calibrator when not in use to prevent unintentional exposures.

6.6 Secure the Calibrator in its storage area when this procedure is completed.

7 CALIBRATION PROCEDURE

7.1 Record the Customer, Customer P O., Victoreen S.O./W.O., 848-8 Calibrator and test equipment, serial numbers and calibration date of all equipment on the Calibration and Data Analysis Data Sheets. The source activity and serial number shall be obtained from the R S.O. and recorded on the Data Sheet.

7.2 Place the 848-8 in a secure, controlled access location and inform personnel that the calibrator will be in use. Remove the detector wall bracket from the 977 (if applicable). Insure that other radiation sources that may be present (such as additional 848-8 calibrator) do not contribute to the field values being taken

WARNING

The following step involves a high radiation field. Do not stand in the path of the radiation field while performing this step. Note, Precautions, Section 6.0.

7.3 Interconnect the Victoreen 946 series readout and 977 detector. Enter the Electrometer Scale Factor from the CAL-ION2 Data Sheet into the 946 series readout. Allow a 15-minute warm up. Place the 977 Detector into the Field Calibrator. Read and record on the Data Sheet the resultant Digital Display Value (mR/h or R/h) for each of the three operating positions of the field calibrator (see Reference 5.3). Allow time for the display to stabilize before recording final value. The estimated average of the displayed value should be recorded. The 946 readout should be positioned so that the display may be easily read by the operator of the 848-8 calibrator. If the digital display value is not within the tolerance stated, notify the Calibration Lab Supervisor for disposition.

7.4 Interconnect the Victoreen 897A-220 or 897-220 (or optional 857 Series Detector) and 956 Series Readout. Enter the Detector Conversion Constant and Tau value from the CAL-GM1 Data Sheet into the 956 Series Readout. Allow a five (5) minute warm-up. Place the 956 Readout so that the display may be easily read by the 848-8 operator. When using an 857 series detector, the 857 Digital Interface Adapter must be connected between the readout and the detector.

7.5 Remove the 977 Detector from the calibrator. Mount the 848-8-105 Adapter into the 848-8 and insert the 897A-220, 897-200, 857A-22X or 857-20A Detector. Read and record on the Data Sheet the resultant digital display values (mR/h or R/h) for the three operating positions of the field calibrator (see Reference 5.3). Allow time for the display to stabilize before recording the final reading. The estimated average of the displayed value should be recorded. If the digital display value is not within the tolerance stated, notify the Calibration Lab Supervisor for disposition.

When required by Sales or Repair order, calibration data for the stainless steel Model 897A-2X1 or 857A-2XX detector may be provided. Insert the 848-8-400 adapter into the 848-8-105 adapter, and repeat Steps 7.4 and 7.5. Record the calibrator data on a supplemental GM detector Data Sheet.

7.6 Remove the 897A-220 Detector and 848-8-105 Adapter from the calibrator.

7.7 Place the 977 Detector in the TRI-SOURCE range and interconnect to the 946A Series Readout. Allow a minimum 15-minute warm up period to elapse prior to proceeding.

7.8 Move the Tri-Source table to the 100.0 cm reference distance. Mount the 977 series detector to the Tri-Source table using the insulating fixture. Secure the preamplifier so that table movement will not cause the preamplifier to fall or otherwise be damaged. Adjust the table height and detector lateral position until both the vertical and horizontal laser spots are centered on the reference points marked on the detector housing.

7.9 Lower attenuators #1, move the Tri-Source table to 750 cm and activate the 2000 Ci Cs-137 source. Increase or decrease the detector/source distance as required to duplicate the OPEN position reading taken in Step 7.3 to within +/- 5 least significant digits (LSD). When the average display value has been duplicated, record the final display reading, and detector/source distance (Dm) in cm on the Data Sheet.

7.10 Lower attenuators # 1, 2 and 3, and move the table position to 500 cm. Increase or decrease the detector/source distance as required to duplicate the Mid position reading taken in Step 7.3 to within +/- 5 LSD. When the average display value has been duplicated, record the display reading and detector, record the display reading and detector/source distance (Dm) in cm on the Data Sheet. Deactivate the 2000 Ci Cs-137 source.

7.11 Raise all attenuators, activate the 20 Ci Cs-137 source and move the Tri-Source table to 900 cm reference distance. Increase or decrease the detector/source distance as required to duplicate the CLOSED position reading from Step 7.3 to within +/- 5 LSD. When the average display value has been duplicated, record the display reading and detector/source distance (Dm) in cm on the Data Sheet.

7.12 Remove the 977 Detector and mount the 897A-220 or 857-20A on the Tri-Source table using the proper fixture. Allow a five (5) minute warm up if the equipment has been turned off at any time since 848-8 data was taken.

7.13 Repeat the methods in Step 7.8 through 7.11 to obtain data for the 897A-220, 897-220, or other GM detector. Allow one minute to elapse or clear the count buffer on the 956A-200 prior to recording the final display value. Note, check source clears buffer.

7.14 The reference distances, source activities and attenuator settings to be used for the GM detectors are:

OPEN	750 cm	1 Attenuator	2000 Ci Source
MID	300 cm	0 Attenuators	20 Ci Source
CLOSED	900 cm	0 Attenuators	20 Ci Source

7.15 When data for the stainless steel housing detectors are required, insert the 848-8-400 adapter into the 848-8-105 adapter and repeat Steps 7.8 through 7.11. Record the Calibrator Data on a supplemental GM Detector Data Analysis Sheet.

8 DATA ANALYSIS

8.1 To determine actual 848-8 dose rates for the 977 detector, the following are used

- REFERENCE TRACK DISTANCE FOR TRI-SOURCE (D_R. cm)
- REFERENCE FIELD VALUES FOR TRI-SOURCE with Attenuators (R_R, mR/h)
- CURRENT FIELD VALUES FOR TRI-SOURCE with Attenuator (R_C, mR/h)

Decay correct the Reference Dose Rates (R_R) from the date of measurement to the current date for each of the three fields The formula below is to be used.

Current Dose Rate = $R * e^{x} \left(-0.693 \frac{(t2 - t1)}{30.0} \right)$

Where R = original rate in mR/h of R/h

t2 - t1 = elapsed time in years between original dose rate determination and the current date

NOTE
The half-life of Cs-137 is 30.0 years.

Record the decay corrected reference dose rates (R_c) and the display values on the Data Analysis Sheet.

8.2 Using the inverse square law, calculate the actual radiation field value per the following formula:

$$\text{Rate} = (R_C) * (D_R)^2/(D_m)^2$$

Where:
R_C = Current Field Value (at Reference Distance)
D_R = Reference Distance, cm
D_m = Measured Distance, cm

Calculate the actual field value exposure rates for the three operating positions of the 848-8. Record all data and calculations on the Data Analysis Sheet, 977 Detector. The calculated values must be within the range of values given on the Data Analysis Sheet.

Notify the Calibration Lab Supervisor if the stated tolerance cannot be obtained. Sign and date the Data Sheets.

NOTE
For older calibrators which are not being reloaded with a new source, these values may not be obtained. Consult the RSO or Physicist as required to determine if calibrator output is sufficient for the application.

8.3 Repeat the above calculations for the GM Series Detector, using CAL-TRI SOURCE and CAL-GM1. Record all data and results on the Data Analysis Sheet, 857 Detector. The calculated values must be within the range of values given on the Data Analysis Sheet. Notify the Calibration Lab Supervisor if the stated tolerance cannot be obtained. Sign and date the Data Sheets.

8.4 For customer use, the following decay correction from the baseline calibration data listed on the Data Sheet is accomplished using the formula below. The calculation is based on a 30.0 year Cesium 137 half-life.

$$\text{Current mR/h} = R * e^{x} \quad \left(-0.693 \frac{(t2 - t1)}{30.0}\right)$$

Where: R = original rate in mR/h

t2- t1 = elapsed time in years between original rate determination and current date.

A Cs-137 Decay Table is provided as Attachment 1 to this procedure.

9 DOCUMENTATION

9.1 Forward all data and calculations to the Staff Physicist for review and approval.

9.2 The RSO/Physicist shall check all data and calculations for correct mathematics and accuracy. If correct, the RSO shall sign in the "RSO/Physicist Check By" section. The RSO will also verify the actual source serial number and activity on the Data Sheet, attach a copy of the Source Certification to the Data Package, and forward to Quality Assurance for final review/acceptance.

9.3 Quality Assurance shall review all data and calculations for procedural compliance and customer requirements If acceptable, Quality Assurance shall sign and date the form in the space provided

9.4 Two copies shall be made of the Calibration Data Sheets, Data Analysis Sheets and Source Certificate. One set, along with the Attachment 1, Source Decay Table, will accompany the 848-8 to the customer. The second set will be filed by Quality Assurance in the job folder. All calculations, data, and certificates shall be filed by the Radiation Safety Officer in the 848-8 Log File by serial number.

FIELD CALIBRATOR SOURCE DECAY TABLE
MODEL 848-8 FIELD CALIBRATOR

To determine the current baseline dose rates for the CLOSED, INTERMEDIATE, and OPEN positions of an 848-8 Field Calibrator the decay table below is used. The dose rates for each position, along with the date that they were determined are started on the Data Analysis Worksheet supplied with the Field Calibrator. The elapsed time between the date listed on the Field Calibrator and the date of the current calibration determine the decay correction factor to be used. This factor is used for all three positions.

TABLE

HALF-LIFE DECAY TABLE FOR Cs-137 OVER 10 YEARS
(HALF-LIFE 30.00 YEARS)

YEAR	ELAPSED TIME - MONTHS											
	0	1	2	3	4	5	6	7	8	9	10	11
0	1.000	0.998	0.996	0.994	0.992	0.990	0.989	0.987	0.985	0.983	0.981	0.979
1	0.977	0.975	0.973	0.972	0.970	0.968	0.966	0.964	0.962	0.960	0.959	0.957
2	0.955	0.953	0.951	0.949	0.948	0.946	0.944	0.942	0.940	0.938	0.937	0.935
3	0.933	0.931	0.929	0.928	0.926	0.924	0.922	0.921	0.919	0.917	0.915	0.913
4	0.912	0.910	0.908	0.906	0.905	0.903	0.901	0.900	0.898	0.896	0.894	0.893
5	0.891	0.889	0.887	0.886	0.884	0.882	0.881	0.879	0.877	0.876	0.874	0.872
6	0.871	0.869	0.867	0.866	0.864	0.862	0.861	0.859	0.857	0.856	0.854	0.852
7	0.851	0.849	0.847	0.846	0.844	0.843	0.841	0.839	0.838	0.836	0.834	0.833
8	0.831	0.830	0.828	0.826	0.825	0.823	0.822	0.820	0.819	0.817	0.815	0.814
9	0.812	0.811	0.809	0.808	0.806	0.805	0.803	0.801	0.800	0.798	0.797	0.795

INOVISION
Radiation Measurements

6045 Cochran Road
Cleveland OH 44139
Phone: 440 248-9300
FAX: 440-349-2307
www.inovision.com

DETECTOR CURVE FIT PROGRAM - GM AREA MONITORS
94085701 Rev B

Model number is 897A-210
Serial number is 100762

DATA FROM CALIBRATION RANGE

Field mR/hr	CPM	Calc field	% Deviation
1.04	271	1.04907	0.872394
3.21	834	3.23103	0.655042
9.56	2509	9.74278	1.91191
30.3	7784	30.4491	0.491939
91.6	22684	90.6205	-1.06931
303	67984	290.356	-4.17282
971	187984	982.757	1.2108

CC1 = 0.00386967
TAU = 1.38204e-006
Root sum of the squares of the deviation is 5.01093

Background CPM: 16
Date Calibrated: 3/2/01
Calibrated by: Bruce Mahood
Customer: Rochester Gas & Electric
Sales order number: 157033
Customer tag number: N/A

INOVISION
Radiation Measurements
6045 Cochran Road
Cleveland OH 44139
Phone: 440 248-9300
FAX: 440-349-2307
www.inovision.com

TITLE: GM Detector Calibration for Area Monitoring Systems
DOCUMENT: CAL-GM6 REV. A ATTACHMENT A

897A-X1X DETECTOR DATA SHEET

Customer Rochester Gas & Electric P.O. # 4500008671

Project N/A S.O. # 157033 W.O. # N/A

Detector Model # 897A-210 Serial # 100762 Tag # N/A

Readout Model # 956A-201 Serial # 117 Cal Date 10-Jan-01

6.3 Detector Discriminator N/A volts (897 ONLY)

6.5 Anti-Jam Duty Cycle Verification Pass (Pass/Fail)

Intensity (mR/h)	Position & No. Of Attenuators	Count Time (sec)	Accumulated Counts	Gross Counts (cpm)	Net Count Rate (cpm)
TKI SOURCE CALIBRATION INFORMATION (20 Ci Cs-137)					
BACKGROUND	200 cm & 6 Attn's	3.00E+02	8.10E+01	1.62E+01	N / A
1.04	200 cm & 6 Attn's	2.40E+02	1.15E+03	2.87E+02	271
3.21	250 cm & 5 Attn's	2.40E+02	3.40E+03	8.50E+02	834
9.56	200 cm & 4 Attn's	2.40E+02	1.01E+04	2.53E+03	2509
30.3	250 cm & 3 Attn's	1.20E+02	1.56E+04	7.80E+03	7784
91.6	200 cm & 2 Attn's	1.20E+02	4.54E+04	2.27E+04	22684
303	250 cm & 1 Attn's	1.20E+02	1.36E+05	6.80E+04	67984
971	200 cm & 0 Attn's	1.20E+02	3.76E+05	1.88E+05	187984
3107	300 cm & 2 Attn's	6.00E+01	Anti Jam	2.40E+06	N / A

6.10 Check Source Response 43.40 mR/h

Conversion Constant 3.87E-03 Dead Time Correction 1.38E-06

Conducted By [signature] Q.A. Review By [signature]

Cal Date 02-Mar-01 Date 2/15/01

225:GM1-6

INOVISION
Radiation Measurements

6045 Cochran Road
Cleveland OH 44139
Phone: 440 248-9300
FAX: 440-349-2307
www.inovision.com

DETECTOR CURVE FIT PROGRAM - GM AREA MONITORS
94085701 Rev B

Model number is 897A-210
Serial number is 132

DATA FROM CALIBRATION RANGE

Field mR/hr	CPM	Calc field	% Deviation
1.04	284	1.04201	0.19305
3.21	881	3.23485	0.774222
9.56	2656	9.77411	2.23966
30.3	8231	30.5046	0.675126
91.6	23931	90.4933	-1.20814
303	71981	290.257	-4.20564
971	200481	982.883	1.22378

CC1 = 0.00366773
TAU = 1.2564e-006
Root sum of the squares of the deviation is 5.17235

Background CPM: 19
Date Calibrated: 3/1/01
Calibrated by: Bruce Mahood
Customer: Rochester Gas & Electric
Sales order number: 157033
Customer tag number: N/A

INOVISION

Radiation Measurements

6045 Cochran Road
Cleveland OH 44139
Phone: 440 248-9300
FAX: 440-349-2307
www.inovision.com

TITLE: GM Detector Calibration for Area Monitoring Systems
DOCUMENT: CAL-GM6 REV. A ATTACHMENT A

897A-X1X DETECTOR DATA SHEET

Customer Rochester Gas & Electric P.O. # 4500008671

Project N/A S.O. # 157033 W.O. # N/A

Detector Model # 897A-210 Serial # 132 Tag # N/A

Readout Model # 956A-201 Serial # 117 Cal Date 10-Jan-01

6.3 Detector Discriminator N/A volts (897 ONLY)

6.5 Anti-Jam Duty Cycle Verification Pass (Pass/Fail)

Intensity (mR/h)	Position & No. Of Attenuaters	Count Time (sec)	Accumulated Counts	Gross Counts (cpm)	Net Count Rate (cpm)
TRI SOURCE CALIBRATION INFORMATION (20 Ci Cs-137)					
BACKGROUND	200 cm & 6 Attn's	3.00E+02	9.30E+01	1.86E+01	N / A
1.04	200 cm & 6 Attn's	2.40E+02	1.21E+03	3.02E+02	284
3.21	250 cm & 5 Attn's	2.40E+02	3.60E+03	9.00E+02	881
9.56	200 cm & 4 Attn's	2.40E+02	1.07E+04	2.68E+03	2656
30.3	250 cm & 3 Attn's	1.20E+02	1.65E+04	8.25E+03	8231
91.6	200 cm & 2 Attn's	1.20E+02	4.79E+04	2.40E+04	23931
303	250 cm & 1 Attn's	1.20E+02	1.44E+05	7.20E+04	71981
971	200 cm & 0 Attn's	1.20E+02	4.01E+05	2.01E+05	200481
3107	300 cm & 2 Attn's	6.00E+01	Anti Jam	2.60E+06	N / A

6.10 Check Source Response 81.40 mR/h

Conversion Constant 3.67E-03

Dead Time Correction 1.26E-06

Conducted By W Malone

Q.A. Review By [signature]

Cal Date 01-Mar-01

Date 4/18/01

225:GM1-6

INOVISION
Radiation Measurements

6045 Cochran Road
Cleveland OH 44139
Phone: 440 248-9300
FAX: 440-349-2307
www.inovision.com

DETECTOR CURVE FIT PROGRAM - GM AREA MONITORS
94085701 Rev B

Model number is 8970-210
Serial number is 131

DATA FROM CALIBRATION RANGE

Field mR/hr	CPM	Calc field	% Deviation
1.04	271	1.07817	3.66997
3.21	806	3.20911	-0.0276075
9.56	2446	9.76178	2.1107
30.3	7483	30.0818	-0.720002
91.6	21883	89.8434	-1.91764
303	65483	287.377	-5.15603
971	102983	986.203	1.56567

CC1 = 0.00397693
TAU = 1.43242e-006
Root sum of the squares of the deviation is 7.15236

Background CPM: 17
Date Calibrated: 3/1/01
Calibrated by: Bruce Mahood
Customer: Rochester Gas & Electric
Sales order number: 157033
Customer tag number: N/A

INOVISION

Radiation Measurements

6045 Cochran Road
Cleveland OH 44139
Phone: 440 248-9300
FAX: 440-349-2307
www.inovision.com

TITLE: GM Detector Calibration for Area Monitoring Systems
DOCUMENT: CAL-GM6 REV. A ATTACHMENT A

897A-X1X DETECTOR DATA SHEET

Customer Rochester Gas & Electric P.O. # 4500008671

Project N/A S.O. # 157033 W.O. # N/A

Detector Model # 897A-210 Serial # 131 Tag # N/A

Readout Model # 956A-201 Serial # 117 Cal Date 10-Jan-01

6.3 Detector Discriminator N/A volts (897 ONLY)

6.5 Anti-Jam Duty Cycle Verification Pass (Pass/Fail)

Intensity (mR/h)	Position & No. Of Attenuators	Count Time (sec)	Accumulated Counts	Gross Counts (cpm)	Net Count Rate (cpm)
TRI SOURCE CALIBRATION INFORMATION (20 Ci Cs-137)					
BACKGROUND	200 cm & 6 Attn's	3.00E+02	8.30E+01	1.66E+01	N / A
1.04	200 cm & 6 Attn's	2.40E+02	1.15E+03	2.87E+02	271
3.21	250 cm & 5 Attn's	2.40E+02	3.29E+03	8.23E+02	806
9.56	200 cm & 4 Attn's	2.40E+02	9.85E+03	2.46E+03	2446
30.3	250 cm & 3 Attn's	1.20E+02	1.50E+04	7.50E+03	7483
91.6	200 cm & 2 Attn's	1.20E+02	4.38E+04	2.19E+04	21883
303	250 cm & 1 Attn's	1.20E+02	1.31E+05	6.55E+04	65483
971	200 cm & 0 Attn's	1.20E+02	3.66E+05	1.83E+05	182983
3107	300 cm & 2 Attn's	6.00E+01	Anti Jam	2.59E+06	N / A

6.10 Check Source Response 89.30 mR/h

Conversion Constant 3.98E-03 Dead Time Correction 1.43E-06

Conducted By [signature] Q.A. Review By [signature]

Cal Date 01-Mar-01 Date 4/18/01

ATTACHMENT
DATA ANALYSIS SHEET
MODEL 848-8 FIELD CALIBRATOR
MID-RANGE ALUMINUM G.M. DETECTOR/955A SYSTEM

Customer: _____ Customer P.O.: _____
848-8 Serial Number: _____ Victoreen S.O.: _____
848-8-105 Adapter: Serial No. _____ Victoreen W.O.: _____
Detector Model No. _____

8.1 Cal-Tri-Source reference Dose Rates for Cs-137 Sources

2000 Ci	D_R 750 cm, R_R	1 Atten on 10/14/99:	2.594 R/hr
20 Ci	D_R 300 cm, R_R	0 Atten on 10/14/99:	450 mR/h
20 Ci	D_R 900 cm, R_R	0 Atten on 10/14/99:	48.0 mR/h

8.1 Cal-Tri-Source:
Current Dose Rate Values For Tri-Source and Attenuators Used, R_C:

2000 Ci	750 cm	1	Attens	R_C	=	_____ mR/h
20 Ci	300 cm	0	Attens	R_C	=	_____ mR/h
20 Ci	900 cm	0	Attens	R_C	=	_____ mR/h

8.1 MEASURED TRACK DISTANCE (7.11 - 7.13) for Attenuators Used, D_M:

2000 Ci	Open	(1) Attens	D_m	=	_____ cm
20 Ci	Mid	(0) Attens	D_m	=	_____ cm
20 Ci	Closed	(0) Attens	D_m	=	_____ cm

8.3 FORMULA:

$$\frac{(R_C) \times (D_R)^2}{(D_M)^2} = \text{Actual Field, mR/h}$$

OPEN: RATE = $\frac{(\quad)\ \text{mR/h} \times (750)^2\ \text{cm}}{(\quad)^2\ \text{cm}}$ = _____ mR/h (1.69 - 3.78 R/h)

MID: RATE = $\frac{(\quad)\ \text{mR/h} \times (300)^2\ \text{cm}}{(\quad)^2\ \text{cm}}$ = _____ mR/h (0.225 - 0.655 R/h)

CLOSED: RATE = $\frac{(\quad)\ \text{mR/h} \times (900)^2\ \text{cm}}{(\quad)^2\ \text{cm}}$ = _____ mR/h (40.0 - 90.0 mR/h)

CALCULATIONS PERFORMED BY: _____ DATE: _____
R.S.O./PHYSICIST CHECK BY: _____ DATE: _____
QUALITY ASSURANCE REVIEW BY: _____ DATE: _____

ENGINEERING		DATE 5/18/01
CALIBRATION LABORATORY DIRECTOR		DATE 5/21/01
QUALITY ASSURANCE		DATE 5/23/2001
RADIATION SAFETY OFFICER		DATE 5/21/01

Inovision Radiation Measurements		DATE 5/18/01	TITLE Calibration Procedure for Model 848-8 Field Calibrator – Digital		
REV 4	ECO NO. 2069	RELEASED FOR PRODUCTION	DOC CTRL	SHEET 1 of 1	NO CAL848-8D	SIZE CAL

ATTACHMENT
DATA ANALYSIS SHEET
MODEL 848-8 FIELD CALIBRATOR
MID-RANGE OPTIONAL G.M. DETECTOR

Detector Model _____

Customer: _____ Customer P.O.: _____

848-8 Serial Number: _____ Victoreen S.O.: _____

848-8-400 Adapter: Serial No. _____ Victoreen W.O.: _____

8.1 Cal-Tri-Source reference Dose Rates for Cs-137 Sources

2000 Ci	D_R 750 cm, R_R	1 Atten on 10/14/99:	2.594 R/hr
20 Ci	D_R 300 cm, R_R	0 Atten on 10/14/99:	450 mR/h
20 Ci	D_R 900 cm, R_R	0 Atten on 10/14/99:	48.0 mR/h

8.1 Cal-Tri-Source:
Current Dose Rate Values For Tri-Source and Attenuators Used, R_C:

2000 Ci	750 cm	1	Attens	R_C	=	_____ mR/h
20 Ci	300 cm	0	Attens	R_C	=	_____ mR/h
20 Ci	900 cm	0	Attens	R_C	=	_____ mR/h

8.1 MEASURED (TRACK) DISTANCE (7.16) for Attenuators Used, D_M:

2000 Ci	Open	(1) Attens	D_m	=	_____ cm
20 Ci	Mid	(0) Attens	D_m	=	_____ cm
20 Ci	Closed	(0) Attens	D_m	=	_____ cm

8.3 FORMULA: $$\frac{(R_C) \times (D_R)^2}{(D_M)^2} = \text{Actual Field, mR/h}$$

OPEN: RATE = $\frac{(\quad)\ \text{mR/h} \times (750)^2\ \text{cm}}{(\quad)^2\ \text{cm}}$ = _____ mR/h (1.69 - 3.78 R/h)

MID: RATE = $\frac{(\quad)\ \text{mR/h} \times (300)^2\ \text{cm}}{(\quad)^2\ \text{cm}}$ = _____ mR/h (0.225 0.655 R/h)

CLOSED: RATE = $\frac{(\quad)\ \text{mR/h} \times (900)^2\ \text{cm}}{(\quad)^2\ \text{cm}}$ = _____ mR/h (40.0 - 90.0 mR/h)

CALCULATIONS PERFORMED BY: _____ DATE: _____

R.S.O./PHYSICIST CHECK BY: _____ DATE: _____

QUALITY ASSURANCE REVIEW BY: _____ DATE: _____

ENGINEERING		DATE 5/18/01
CALIBRATION LABORATORY DIRECTOR		DATE 5/21/01
QUALITY ASSURANCE		DATE 5/23/2001
RADIATION SAFETY OFFICER		DATE 5/21/01

Inovision Radiation Measurements			DATE 5/18/01		TITLE Calibration Procedure for Model 848-8 Field Calibrator – Digital	
REV 4	ECO NO. 2069	RELEASED FOR PRODUCTION	DOC CTRL	SHEET 1 of 1	NO. CAL848-8D	SIZE CAL

ATTACHMENT

MODEL 848-8A FIELD CALIBRATOR
CALIBRATION DATA SHEET, LOW-RANGE ALUMINUM HOUSING G.M. DETECTOR

Customer: ROCHESTER GAS & ELECTRIC

Customer P.O.: 4500009423
Victoreen S.O.: 158372
Victoreen W.O.: 53100

848-8A Serial Number: 101364 Source: ^{137}Cs Activity: 10.45 mCi

Source Serial Number: 1786QV Assay Date: 7-7-00

G.M. Detector Model No. 877A-210 Serial No. 100762 Cal Due Date 3-2-02
956A Readout Model No. 956A-201 Serial No. IRM-0848 Cal Due Date 1-10-02
848-8-105 Adapter (Cust) YES or Inovision Adapter: NO (Yes/No)

DATA (GM, 955A Channel)

848-8A Calibrator Data			Tri-Source Range Data		
Field Calibrator Position:	Digital Display Value (mR/h) Step 7.5	Tolerance	*Digital Display Value Step 7.13	Number of Attenuators	Measured Track Distance (D_m, cm) Step 7.13
Closed	8.52	4.0 - 10 mR/h	8.54	4 (20 Ci)	212.0
Intermediate	45.9	23 - 66 mR/h	45.9	2 (20 Ci)	281.0
Open	255	150 360 mR/h	255	1 (20 Ci)	266.0

* Must be within +/- 5 Least Significant Digit of the Digital Display Value obtained in the 848-8A Field Calibrator.

Data Taken by: [signature] Date: 5/3/01

ENGINEERING	[signature]	DATE 3-8-01
MANUFACTURING	L. Waters	DATE 3-14-01
QUALITY ASSURANCE	[signature]	DATE 3/12/01
RADIATION SAFETY OFFICER	Mark Sawyer	DATE 3/13/01

Inovision Radiation Measurements			DATE 3/2/01	TITLE Calibration Procedure for Model 848-8A 10 mCi Field Calibrator -- Digital		
REV 1	ECO NO. 1882	RELEASED FOR PRODUCTION	DOC CTRL	SHEET 1 of 5	NO. CAL848-8AD	SIZE CAL

MODEL 848-8A FIELD CALIBRATOR
CALIBRATION DATA SHEET, OPTIONAL LOW-RANGE G.M. DETECTOR

Customer: _____ Customer P.O.: _____

Victoreen S.O.: _____

Victoreen W.O.: _____

848-8A Serial Number: _____ Source: ^{137}CS Activity: _____ mCi

Source Serial Number: _____ Assay Date: _____

Detector Model No. _____ Serial No. _____ Cal Due Date _____

956 Readout Serial Number: _____ Cal Due Date: _____

848-8-105 Adapter (Customer's): _____ VICO S/N 119: (Yes/No)

848-8-400 Adapter (Stainless Steel Detectors Only): _____ (Yes/No)

DATA (GM, 955 Detector)

848-8A Calibration Data			Tri-Source Range Data		
Field Calibrator Position:	Digital Display Value (mR/h) Step 7.5	Tolerance	*Digital Display Value Step 7.13	Number of Attenuators	Measured Track Distance (D_m, cm) Step 7.13
Closed		4.0-10 mR/h		4 (20 Ci)	
Intermediate		23 66 mR/h		2 (20 Ci)	
Open		150 360 mR/h		1 (20 Ci)	

* Must be within +/- 5 Least Significant Digit of the Digital Display Value obtained in the 848-8 Field Calibrator Reading

Data Taken by: _____ Date: _____

DATA ANALYSIS SHEET
MODEL 848-8A FIELD CALIBRATOR
LOW-RANGE ALUMINUM G.M. DETECTOR/955A SYSTEM

Customer: ROCHESTER GAS & ELECTRIC
848-8A Serial Number: 101364
848-8-105 Adapter: YES/NO YES (CUSTOMER)

Customer P.O.: 4500009423
Victoreen S.O.: 159372
Victoreen W.O.: 53100

8.1 Cal-Tri-Source reference Dose Rates for 20 Ci ^{137}Cs Source

D_R 252.2 cm, R_R	1 Atten on 2/26/01:	300 mR/h
D_R 247.1 cm, R_R	2 Atten on 2/26/01:	60 mR/h
D_R 244 cm, R_R	4 Atten on 2/26/01:	6.38 mR/h

8.1 Cal-Tri-Source:
Current Dose Rate Values for Tri-Source and Attenuators Used, R_C:

252.2 cm	1 Attens	R_C =	298.8	mR/h
247.1 cm	2 Attens	R_C =	59.8	mR/h
244 cm	4 Attens	R_C =	6.35	mR/h

8.1 MEASURED TRACK DISTANCE (7.11 - 7.13) for Attenuators Used, D_m:

Open	(1) Attens	D_m =	266.0	cm
Mid	(2) Attens	D_m =	281.0	cm
Closed	(4) Attens	D_m =	212.0	cm

8.3 FORMULA:

$$\frac{(R_C) \times (D_R)^2}{(D_M)^2} = \text{Actual Field, mR/h}$$

OPEN: RATE = $\frac{(298.8)\ \text{mR/h} \times (252.2)^2\ \text{cm}}{(266)^2\ \text{cm}}$ = 269 mR/h (150 - 360 mR/h)

MID: RATE = $\frac{(59.8)\ \text{mR/h} \times (247.1)^2\ \text{cm}}{(281)^2\ \text{cm}}$ = 46.2 mR/h (23 - 66 mR/h)

CLOSED: RATE = $\frac{(6.35)\ \text{mR/h} \times (244)^2\ \text{cm}}{(212)^2\ \text{cm}}$ = 8.41 mR/h (4.0 - 10 mR/h)

CALCULATIONS PERFORMED BY: [signature] DATE: 5/3/01
R.S.O./PHYSICIST CHECK BY: [signature] DATE: 5/3/01
QUALITY ASSURANCE REVIEW BY: [signature] DATE: 5/3/01

DATA ANALYSIS SHEET
MODEL 848-8A FIELD CALIBRATOR
LOW-RANGE OPTIONAL G.M. DETECTOR

Detector Model _____
Customer: _____
848-8A Serial Number: _____
848-8-400 Adapter: YES/NO

Customer P.O.: _____
Victoreen S.O.: _____
Victoreen W.O.: _____

8.1 Cal-Tri-Source reference Dose Rates for 20 Ci ^{137}Cs Source

D_R 252.2 cm, R_R	1 Atten on 2/26/01:	300 R/hr
D_R 247.1 cm, R_R	2 Atten on 2/26/01:	60 mR/h
D_R 244 cm, R_R	4 Atten on 2/26/01:	6.38 mR/h

8.1 Cal-Tri-Source:
Current Dose Rate Values for Tri-Source and Attenuators Used, R_C:

252.2 cm	1	Attens	R_C = _____	mR/h
247.1 cm	2	Attens	R_C = _____	mR/h
244 cm	4	Attens	R_C = _____	mR/h

N/A

8.1 MEASURED (TRACK) DISTANCE (7.16) for Attenuators Used, D_m:

Open	(1) Attens	D_m =	_____	cm
Mid	(2) Attens	D_m =	_____	cm
Closed	(4) Attens	D_m =	_____	cm

8.3 FORMULA:

$$\frac{(R_C) \times (D_R)^2}{(D_M)^2} = \text{Actual Field, mR/h}$$

OPEN: RATE = $\frac{(\quad)\ \text{mR/h} \times (252.2)^2\ \text{cm}}{(\quad)^2\ \text{cm}}$ = _____ mR/h (150 - 360 mR/h)

MID: RATE = $\frac{(\quad)\ \text{mR/h} \times (247.1)^2\ \text{cm}}{(\quad)^2\ \text{cm}}$ = _____ mR/h (23 - 66 mR/h)

CLOSED: RATE = $\frac{(\quad)\ \text{mR/h} \times (244)^2\ \text{cm}}{(\quad)^2\ \text{cm}}$ = _____ mR/h (4.0 - 10 mR/h)

CALCULATIONS PERFORMED BY: _____ DATE: _____
R.S.O./PHYSICIST CHECK BY: _____ DATE: _____
QUALITY ASSURANCE REVIEW BY: _____ DATE: _____

ATTACHMENT
MODEL 848-8 FIELD CALIBRATOR
CALIBRATION DATA SHEET, 977 DETECTOR

Customer: _____ Customer P.O.: _____

Victoreen S.O.: _____

Victoreen W.O.: _____

848-8 Serial Number: _____ Source: ^{137}Cs Activity: _____ mCi

Source Serial Number: _____ Assay Date: _____

977 Detector Model Number: _____ Cal Due Date: _____

977 Detector Serial Number: _____

946 Readout Serial Number: _____

DATA (977 Detector)

848-8 Calibration Data			Tri-Source Range Data		
Field Calibrator Position	Digital Display Value (mR/h) Step 7.3	Tolerance	Digital Display Value (mR/h*) Step 7.10 & 7.11	Number of Attenuators	Measured Track Distance (D_m, cm) Step 7.9 & 7.11
Closed		35.0 - 70.0 mR/h		0 (20 Ci)	
Intermediate		.350 - .700 R/h		3 (2000 Ci)	
Open		1.93 - 5.00 R/h		1 (2000 Ci)	

* Must be within +/- 5 Least Significant Digit of the Digital Display Value obtained in the 848-8 Field Calibrator.

Data Taken By: _____ Date: _____

ENGINEERING		DATE 5-18-01
CALIBRATION LABORATORY DIRECTOR		DATE
QUALITY ASSURANCE		DATE 5/28/2001
RADIATION SAFETY OFFICER		DATE

Inovision Radiation Measurements			DATE 5/18/01		TITLE Calibration Procedure for Model 848-8 Field Calibrator – Digital	
REV 4	ECO NO. 2069	RELEASED FOR PRODUCTION	DOC CTRL	SHEET 1 of 1	NO CAL848-8D	SIZE CAL

ATTACHMENT
MODEL 848-8 FIELD CALIBRATOR
CALIBRATION DATA SHEET, MID-RANGE ALUMINUM HOUSING G.M. DETECTOR

Customer: _____ Customer P.O.: _____

Victoreen S.O.: _____

Victoreen W.O.: _____

848-8 Serial Number: _____ Source: ^{137}Cs Activity: _____ mCi

Source Serial Number: _____ Assay Date: _____

G.M. Detector Model No. _____ Serial No. _____ Cal Due Date _____
956 Readout Model No. _____ Serial No. _____ Cal Due Date _____
848-8-105 Adapter (Cust) _____ VICO S/N 119: _____ (Yes/No)

DATA (GM, 955 Detector)

848-8 Calibrator Data			Tri-Source Range Data		
Field Calibrator Position:	Digital Display Value (mR/h) Step 7.5	Tolerance	*Digital Display Value Step 7.13	Number of Attenuators	Measured Track Distance (D_m, cm) Step 7.13
Closed		40.0 - 90.0 mR/h		0 (20 Ci)	
Intermediate		.225 - 655 R/h		0 (20 Ci)	
Open		1.69 - 3.78 R/h		1 (2000 Ci)	

* Must be within +/- 5 Least Significant Digit of the Digital Display Value obtained in the 848-8 Field Calibrator.

Data Taken By: _____ Date: _____

ENGINEERING		DATE 5/18/01
CALIBRATION LABORATORY DIRECTOR		DATE 5/21/01
QUALITY ASSURANCE		DATE 5/23/2001
RADIATION SAFETY OFFICER		DATE 5/21/01

Inovision Radiation Measurements			DATE 5/18/01		TITLE Calibration Procedure for Model 848-8 Field Calibrator – Digital	
REV 4	ECO NO. 2069	RELEASED FOR PRODUCTION	DOC CTRL	SHEET 1 of 1	NO. CAL848-8D	SIZE CAL

ATTACHMENT
MODEL 848-8 FIELD CALIBRATOR
CALIBRATION DATA SHEET, OPTIONAL MID-RANGE G.M. DETECTOR

Customer: _____ Customer P.O.: _____

Victoreen S.O.: _____

Victoreen W.O.: _____

848-8 Serial Number: _____ Source: ^{137}Cs Activity: _____ mCi

Source Serial Number: _____ Assay Date: _____

Detector Model No. _____ Serial No. _____ Cal Due Date _____

956 Readout Serial Number: _____ Cal Due Date: _____

848-8-105 Adapter (Customer's): _____ VICO S/N 119: (Yes/No)

848-8-400 Adapter (Stainless Steel Detectors Only): _____ (Yes/No)

DATA (GM, 955 Detector)

848-8 Calibration Data			Tri-Source Range Data		
Field Calibrator Position:	Digital Display Value (mR/h) Step 7.5	Tolerance	*Digital Display Value Step 7.13	Number of Attenuators	Measured Track Distance (D_m, cm) Step 7.13
Closed		40.0 - 90.0 mR/h		0 (20 Ci)	
Intermediate		.225 - .655 R/h		0 (20 Ci)	
Open		1.69 - 3.78 R/h		1 (2000 Ci)	

* Must be within +/- 5 Least Significant Digit of the Digital Display Value obtained in the 848-8 Field Calibrator Reading

Data Taken By: _____ Date: _____

ENGINEERING		DATE 5/18/01
CALIBRATION LABORATORY DIRECTOR		DATE 5/21/01
QUALITY ASSURANCE		DATE 5/23/2001
RADIATION SAFETY OFFICER		DATE 5/21/01

Inovision Radiation Measurements			DATE 5/18/01		TITLE Calibration Procedure for Model 848-8 Field Calibrator – Digital	
REV 4	ECO NO. 2069	RELEASED FOR PRODUCTION	DOC CTRL	SHEET 1 of 1	NO. CAL848-8D	SIZE CAL

ATTACHMENT
DATA ANALYSIS SHEET
MODEL 848-8 FIELD CALIBRATOR
977 DETECTOR

Customer: _____ Customer P.O.: _____

848-8 Serial Number: _____ Victoreen S.O.: _____

Victoreen W.O.: _____

8.1 Cal-Tri-Source reference Dose Rates for Cs-137 Sources

2000 Ci	D_R 750 cm, R_R	1 Atten on 10/14/99:	2.595 R/hr
2000 Ci	D_R 500 cm, R_R	3 Atten on 10/13/99:	599.2 mR/h
20 Ci	D_R 900 cm, R_R	0 Atten on 10/14/99:	48 mR/h

8.1 Cal-Tri-Source:
Decayed Dose Rate Values For Tri-Source and Attenuators Used, R_C:

2000 Ci	750 cm	1	Attens	R_C	=	_____ mR/h
2000 Ci	500 cm	3	Attens	R_C	=	_____ mR/h
20 Ci	900 cm	0	Attens	R_C	=	_____ mR/h

8.1 MEASURED TRACK DISTANCE (7.11 - 7.13) for Attenuators Used, D_M

2000 Ci	Open	(1) Attens	D_m	=	_____ cm
2000 Ci	Mid	(3) Attens	D_m	=	_____ cm
20 Ci	Closed	(0) Attens	D_m	=	_____ cm

8.2 FORMULA:

$$\frac{(R_C) \times (D_R)^2}{(D_m)^2} = \text{Actual Field, mR/h}$$

OPEN: RATE = $\frac{(\quad)\ \text{mR/h} \times (750)^2\ \text{cm}}{(\quad)^2\ \text{cm}}$ = _____ mR/h (1930 - 5000 mR/h)

MID: RATE = $\frac{(\quad)\ \text{mR/h} \times (500)^2\ \text{cm}}{(\quad)^2\ \text{cm}}$ = _____ mR/h (350 - 700 mR/h)

CLOSED: RATE = $\frac{(\quad)\ \text{mR/h} \times (900)^2\ \text{cm}}{(\quad)^2\ \text{cm}}$ = _____ mR/h (35.0 - 70.0 mR/h)

CALCULATIONS PERFORMED BY: _____ DATE: _____

R.S.O./PHYSICIST CHECK BY: _____ DATE: _____

QUALITY ASSURANCE REVIEW BY: _____ DATE: _____

ENGINEERING		DATE 5/18/01
CALIBRATION LABORATORY DIRECTOR		DATE 5/21/01
QUALITY ASSURANCE		DATE 5/23/2001
RADIATION SAFETY OFFICER		DATE 5/21/01

Inovision Radiation Measurements			DATE 5/18/01		TITLE Calibration Procedure for Model 848-8 Field Calibrator – Digital	
REV 4	ECO NO. 2069	RELEASED FOR PRODUCTION	DOC CTRL	SHEET 1 of 1	NO. CAL848-8D	SIZE CAL

Appendix C
TEST PROCEDURES AND DATA

C.1 TEST PROCEDURES AND DATA

Test procedures listed in this appendix may be used for site equipment testing, alignment or trouble-shooting activities except as noted. Note that Test Firmware and the 942TS breakout box are required to perform TP956A-201-3. Note that Test Procedure TPS157033A2 requires a special noise generator and is not required to be performed in the field. Test Data is included for all electronic assemblies provided under contract.

Test Procedures

TP956A-201-3	Electronic Factory Test Procedure for Ratemeter
TP897A	Electronic Test Procedure for 897A-210/-211
LT956A/897A-21X	Loop Test Procedure using 848-8A Field Calb.

Data Sheets

TP956A-201-3	Data Sheets for pre-mod 956A-201 Ratemeters s/n 129, 130 and 133.
TP897A	Data Sheets for 897A-210 Detectors s/n 131, 132 and 100762
LT956A/897A-21X	Data Sheets for 956A-201-M1 s/n 104643 and 897A-210 s/n 131
	Data Sheets for 956A-201-M1 s/n 104644 and 897A-210 s/n 132
	Data Sheets for 956A-201-M1 s/n 104645 and 897A-210s/n 100762
TPS157033A2	Data Sheet for S157033A2 s/n 104899

INOVISION RADIATION MEASUREMENTS TITLE: TEST PROCEDURE FOR THE 956A-201 UNIVERSAL DIGITAL RATEMETER CUSTOMER: N/A DOCUMENT: TP956A-201-3 REV. 4	PAGE 1 OF 27

ISSUE DATE: JAN 18 2000

REVISION LIST

REV	ECO #	
4	9CR48-99	

	APPROVAL	DATE
RELIABILITY ENGINEER		11-12-99
MANUFACTURING ENGINEER		11-12-99
REGULATORY AFFAIRS ENGINEER		11-12-99

ISSUED BY: GEORGE BUCK

FILE COPY

INOVISION RADIATION MEASUREMENTS
TITLE: TEST PROCEDURE FOR THE 956A-201 UNIVERSAL DIGITAL RATEMETER
CUSTOMER: N/A
DOCUMENT: TP956A-201-3 REV. 4

TABLE OF CONTENTS

FILE COPY

4.6 Wavetek 187 Signal Generator or equivalent.

4.7 Frequency Counter: Fluke 1900A or equivalent – must be calibrated.

Note: If the Function/Pulse generator used has a calibrated display, a calibrated frequency counter is not required.

4.8 Test Software 94094200200 (Latest Revision Level).

4.9 Test Leads, BNC terminated coaxial cables, etc.

4.10 Digital Multi-Meter (DMM): Fluke 8050A or equivalent -- must be calibrated.

4.11 956A-201/897A-2XX Interconnecting cable per drawing 956A-201-106.

4.12 Right Angle Connector for 942-200-80A Board.

4.13 Detector: 897A-210 or 897A-220 shop test unit.

5.5.1 Connect the DVM neg lead to the Ground point (black 18GA wires) located on the power supply assembly terminal block. Connect the DVM positive lead to the +5 point (blue 18 GA wires) located on the power supply assembly terminal block.

5.5.2 Apply power to the unit under test.

5.5.3 Verify a +5.00 VDC ± 0.100 VDC reading on the DVM. A single adjustment is VIA VR1 provided on the 5V power supply to trim all three supply outputs. Enter the final reading on the test data sheet.

5.5.4 Connect the DVM positive lead to the +15V terminal (red 18 GA wires). Verify a reading of +15V±0.75VDC. Enter the reading on test data sheet.

5.5.5 Connect the DVM positive lead to the -15VDC terminal (orange 18 GA wires). Verify a reading of -15VDC ±0.75 VDC. reading on the test Data Sheet.

FILE COPY

TABLE I -- Serial Interface Baud Rate, P/N 942-200-80A

SWITCH POSITION				OUTPUT RATE
4	3	2	1	(BAUD RATE)
OFF	OFF	ON	ON	110
OFF	ON	OFF	ON	150
ON	OFF	OFF	ON	300
OFF	OFF	OFF	ON	600
ON	ON	ON	OFF	1200
ON	OFF	ON	OFF	2400
* ON	ON	OFF	OFF	4800
ON	OFF	OFF	OFF	9600

* Normal setting for test and operational modes.

NOTE: Switches 5, 7 and 8 should be in the OFF position while Switch 6 should be in the ON position.

FILE COPY

7.4 Connect DMM (+) lead to the "LO" test jack.

7.5 Adjust VR11, low discriminator, to both extremes verifying a range of approximately 0.07 V to 1.0 V. Record PASS or FAIL on the Data Sheet.

7.6 Adjust VR11 for 0.5 +/- 0.001 V and record the final value on the Data Sheet.

8.0 INPUT AMPLIFIER ADJUSTMENT

8.1 Using a test lead, short "P5 SIG." Input to chassis GND.

8.2 Connect DMM (+) lead to "PULSE" test point (Located near JP6).

8.3 Adjust VR9 for .0000 V +/- .0001 V. Paint VR9.

8.4 Record value on Data Sheet.

8.5 Remove test lead from "P5 SIG.". Connect Signal Generator to "P5 SIG.".

8.6 Set-up Oscilloscope for .2 V/DIV., 2 uS/DIV.

8.7 Connect Oscilloscope Channel 1 to "P5 SIG.".

8.8 Connect Oscilloscope Channel 2 to "PULSE" test point.

8.9 Adjust VR8 so that both waveforms are at equal amplitudes (Unity Gain). Paint VR8.

8.10 Circle result (Pass/Fail) on Data Sheet.

10.4 Circle result (Pass/Fail) on Data Sheet.

11.0 TEST 3: BAR GRAPH TEST

BAR GRAPH TEST activates each segment from left to right starting with Green, then Amber, and then Red.

11.1 Select subtest "3".

11.2 Verify that all Bar Graph Segments activate in proper sequence and color.

11.3 Circle result (Pass/Fail) on Data Sheet.

12.0 TEST 4: DISPLAY TEST

DISPLAY TEST cycles each character from right to left across the display. Character sequence is 1, 2, 3, 4, 5, 6, 7, 8, 9, -, E, H, L, P, ., .

12.1 Select subtest "4".

12.2 Verify that all units properly display each character and in the right sequence.

12.3 Circle result (Pass/Fail) on Data Sheet.

13.0 TEST 5: SWITCH TEST

SWITCH TEST reads status changes of the UDR's front panel switches and the 942TS-100 Test Set's REMOTE ACK switch.

13.1 Connect jumper wire across the R11 position (Located in rear, left hand corner).

13.2 Select subtest "5".

15.5 Verify TV reads 001000 Hz +/- 000010 Hz. Enter result on Data Sheet.

15.6 Adjust Signal Generator frequency for 100 Hz.

15.7 Verify TV reads 000100 Hz +/- 00001 Hz. Enter result on Data Sheet.

15.8 Adjust Signal Generator frequency for 10 kHz.

15.9 Verify TV reads 010000 Hz +/- 000100 Hz. Enter result on Data Sheet.

15.10 Adjust Signal Generator frequency for 100 kHz.

15.11 Verify TV reads 100000 +/- 001000 Hz. Enter results on Data Sheet.

15.12 Adjust Signal Generator frequency for 280 kHz.

15.13 Verify TV reads 262126 Hz (Overflow). Enter result on Data Sheet.

15.14 Adjust Signal Generator amplitude for a +5.5 V.

15.15 Verify TV reads 000000 Hz +/- 000010 Hz. Enter result on Data Sheet.

15.16 Disconnect Signal Generator from "P5 SIG.".

15.17 Adjust VR10 for a 7 +/- 0.01V DVM indication. Neg probe on "GND" test jack, and positive probe on "HI" test jack. Record the final value on the Data Sheet.

15.18 Verify VRII adjustment for 0.5 +/- 0.001 V. DVM Neg probe on "GND" test jack and positive probe on "LO" test jack. Record the final value on the Data Sheet.

FILE COPY

17.0 TEST 8: D/A CONVERTER 4-20 mA/0-10 V OUTPUT TEST

The D/A CONVERTER TEST sets the high scale and low scale output for calibration of two 4-20 mA outputs and one 0 -10 V output. The 942TS-100T Set has had 250 Ohm Load Resistors added to the 4-20 mA output connections. The measurements will be made in volts even though the TV instructions call for current. Verification of low, mid, and high scale are performed. Follow calibration instructions displayed on TV.

Refer to following table for correct conversions and tolerances.

4-20 mA OUTPUTS

SCALE	CURRENT	VOLTAGE
Low	4 mA	1.000 V +/- .001 V
Mid	12 mA	3.000 V +/- .015 V
High	20 mA	5.000 V +/- .001 V

0-10 V OUTPUT

SCALE	VOLTAGE
Low	.0000 V +/- .0001 V
Mid	5.000 V +/- .030 V
High	10.000 V +/- .001 V

17.1 Select subtest "8".

17.2 Follow TV calibration instructions.

17.3 Record Calibration Verification values on Data Sheet.

17.4 Paint VR1, VR2, VR4, VR5, VR6, and VR7.

20.0 TEST B: HIGH VOLTAGE POWER SUPPLY TEST

The HIGH VOLTAGE POWER SUPPLY TEST verifies the voltage range as well as testing the HV Shutdown function.

20.1 Connect HV Probe (-) lead to "GND" test jack. Connect HV Probe (+) lead to "P4 HV" MHV Connector.

20.2 Select subtest "B".

20.3 Adjust R5 (HV PCB Assy.) for a reading of 600 V ± 1 V.

20.4 Record value on Data Sheet.

20.5 Connect DMM (+) lead to the "HV TEST" test jack (Test jack provides a 1000:1 DC voltage measurement). Verify a DMM reading of 0.600 V ± .060 V.

20.6 Record value on Data Sheet.

20.7 Adjust R5 to both extremes verifying a voltage range of 400 V to 1800 V.

20.8 Record adjustment minimum and maximum values on the Data Sheet.

20.9 Re-adjust HV for 550 V +/- 1 Volt.

20.10 Enter "S" on TV. Verify that HV has been shut down.

20.11 Circle result (Pass/Fail) on Data Sheet.

23.0 TEST F: JUMPER CONFIGURATION TEST

The JUMPER CONFIGURATION TEST verifies whether or not JP3 Jumpers 1-5 are installed and displays the appropriate position on the TV.

23.1 Select subtest "F".

23.2 Verify that all JP3 jumpers are installed.

23.3 Remove all JP3 jumpers. Repeat test and verify that all jumpers are removed.

23.4 Install one jumper at a time and verify the position of that jumper is correct by repeating the test.

23.5 Circle result (Pass/Fail) on the Data Sheet.

24.0 OPERATING SOFTWARE TEST

24.1 Remove Power from the UDR. Remove DMM leads. Remove 942TS Test Set connections. Remove 942-200-80A Communications PCB Assembly and angle bracket.

24.2 Replace Test Software with Operating Software. Standard operating software is 94095603.

24.3 Hold down the "ENTER" Key and then apply power to UDR (Automatically sets "HIGH" and "WARN" Alarm Levels). Turn Power Off then re-apply Power.

24.4 0.00 mR/h should be displayed and the "RANGE" LED should be On.

24.5 Depress the "HIGH" button. Verify 1.00E3 mR/h.

24.6 Depress the "WARN" button. Verify 1.00E1 mR/h.

24.7 Depress the "CHECK SOURCE" button. Verify CHECKSOURCE LED turns On.

FILE COPY

25.9 After 100 hours, log burn-in stop date and time, and repeat Steps 24.5 through 24.7. Remove power. Using an interconnection cable wired per drawing 956A-201-106, connect the 956A-201 under test to a shop 897A-210 or 897A-220 detector.

25.10 Apply Power. Verify that the UDR responds to the Detector by activating the 956A checksource push button and noting the increase in displayed value.

25.11 Remove Power. Remove the Interconnect Cable and the Line Cord. UDR is now ready to be cleaned up and packaged.

25.12 Circle results (Pass/Fail) on Data Sheet.

26.0 DOCUMENTATION

26.1 After final review, Quality Assurance shall file the completed original document in the Quality Assurance Sales or Job File.

956A-201 TEST DATA SHEET Page 2 of 4

11.0 TEST 3: BAR GRAPH TEST

11.3	Bar Graph Segment Sequence and Color	Pass/Fail

12.0 TEST 4: DISPLAY TEST

12.3	Display Characters and Sequence	Pass/Fail

13.0 TEST 5: SWITCH TEST

13.5	Front Panel Switches and REMOTE ACK.	Pass/Fail

14.0 TEST 6: INDICATOR/BACKLITE/FAIL TEST

14.3	Indicator/Backlite/Fail LED Operation	Pass/Fail

15.0 TEST 7: COUNTER/DISCRIMINATOR TEST

15.3	Verify 000000 Hz	_____Hz
15.5	Verify 001000 Hz +/- 000010 Hz	_____Hz
15.7	Verify 000100 Hz +/- 000001 Hz	_____Hz
15.9	Verify 010000 Hz +/- 000100 Hz	_____Hz
15.11	Verify 100000 +/- 001000 Hz	_____Hz
15.13	Verify Overflow 262126 Hz	_____Hz
15.15	Verify 000000 Hz +/- 000010 Hz	_____Hz
15.17	VR10 Adjustment, 7 V +/- 0.01 V	_____V
15.18	VR11 Adjustment, 0.5 V +/- 0.001 V	_____V

16.0 ANTI JAM BIT TEST

16.4	Verify 05 displayed	_____
16.7	Verify 07 displayed	_____
16.11	Verify 05 displayed	_____

FILE COPY

956A-201 TEST DATA SHEET Page 4 of 4

21.0 TEST C: DATA ENTRY TEST

21.3	DIGIT, VALUE, and ENTER Switches	Pass/Fail
21.5	FUNCTION Switch	Pass/Fail

22.0 TEST D: RELAY TEST

22.4	Relay Response	Pass/Fail

23.0 TEST F: JUMPER CONFIGURATION TEST

23.5	JP3 Jumpers	Pass/Fail

24.0 OPERATION SOFTWARE TEST

24.8	Display Reading, "RANGE" LED HV Reading, "High", "Warn", "Rate" Values, Check Source LED	Pass/Fail

25.0 BURN-IN

25.8	Burn-in Start Date/Time	_____
25.9	Burn-in Stop Date/Time)	_____
25.10	Check Source Function	Pass/Fail
25.12	No failures observed during burn-in and Post burn-in tests	Pass/Fail

Performed By _____ Date ___/___/___

Q.A. Review By _____ Date ___/___/___

FILE COPY

VICTOREEN, INC. TITLE: ELECTRONIC TEST PROCEDURE FOR 897A-2X0 AND 897A-2X1 DETECTORS CUSTOMER: N/A DOCUMENT: TP897A REV. A	PAGE 1 OF 12

ISSUE DATE: NOVEMBER 10, 1995

REVISION LIST

REV	ECO #
A	9CR28-95

	APPROVAL	DATE
PROJECT ENGINEER		11/14/95
TECHNICAL SUPPORT MANAGER		11/14/95
QUALITY ASSURANCE		11-14-95

ISSUED BY: DAVID WARNER

FILE COPY

VICTOREEN, INC.
TITLE: ELECTRONIC TEST PROCEDURE FOR 897A-2X0 AND 897A-2X1 DETECTORS
CUSTOMER: N/A
DOCUMENT: TP897A REV. A

RECORD OF REVISIONS

DOCUMENT REV. LEVEL	DESCRIPTION/PAGES AFFECTED
A	ORIGINAL ISSUE

VICTOREEN, INC.
TITLE: ELECTRONIC TEST PROCEDURE FOR 897A-2X0 AND 897A-2X1 DETECTORS
CUSTOMER: N/A
DOCUMENT: TP897A REV. A

TABLE OF CONTENTS

VICTOREEN, INC.
TITLE: ELECTRONIC TEST PROCEDURE FOR 897A-2X0 AND 897A-2X1 DETECTORS
CUSTOMER: N/A
DOCUMENT: TP897A REV. A

1.0 PURPOSE

1.1 The purpose of this procedure is to verify the proper operation of the model 897A-2XX series of GM area monitor detectors prior to source range calibration.

2.0 SCOPE

2.1 This procedure is to be performed on all 897A-2X0 and 897A-2X1 series detectors prior to source range calibration to insure proper set-up and function. This procedure shall apply to production detectors as well as those received for repair or calibration. The following items are verified or adjusted by this procedure:

2.2 Detector current draw and local regulation.

2.3 Jumper placement.

2.4 Anti-jam function and range adjustment.

2.5 Discriminator range adjustment and final setting.

2.6 Detector output pulse height, period and symmetry.

2.7 Detector background countrate.

2.8 Check source operation in all positions of mounting.

3.0 RESPONSIBILITIES

3.1 Personnel performing this test must have a Technicians Skill Level 1 per S.O.P. 902.003.

3.2 Data generated by this test must be reviewed and approved by Q.A. prior to shipment. In addition, Q.A. has the responsibility of maintaining individual board test data in a job file.

3.3 The completed Data Sheet shall accompany the detector to the calibration range.

4.0 ENVIRONMENTAL CONDITIONS

4.1 Environmental conditions shall be the prevailing laboratory ambient for temperature and humidity. Radiation background levels shall not exceed 50 uR/h for the background check portion of this procedure.

5.0 EQUIPMENT REQUIRED

5.1 100 MHz Oscilloscope: Tektronix 465B or equivalent - must be calibrated and equipped with a X10 probe.

5.2 956A-201 Digital Ratemeter (UDR).

5.3 Digital Voltmeter (DVM): Fluke 8050A or equivalent - must be a calibrated device.

5.4 Test Data Sheets as attached.

5.5 Interconnection cable from 956A-201 to 897A series detector. Refer to Loop Diagram 956A-201-106.

5.6 Jumpers and test leads as required.

5.7 Precision DC voltage source or adjustable power supply: nominal 0-10 volt range.

5.8 IC test extended - 14 pin dual in-line package.

6.0 PROCEDURE

6.1 Initial set-up of device under test and test equipment.

6.1.1 Record Customer, P.O. and S.O. (or W.O.) numbers on the Data Sheet. Record detector assembly serial number and circuit board revision level and serial number on the Data Sheet.

6.1.2 Record the model, serial number and the calibration due date of the digital voltmeter and oscilloscope on the Data Sheet.

NOTE: **The majority of the steps in this procedure are performed with the detector outer housing removed. Use caution as high voltage (575 volts) is present in some areas of the circuit board.**

6.1.3 Adjust the high voltage supply on the 956A-201 to be used to 575 volts. Adjust the 956A-201 lower discriminator (VR11) to 0.50 volts and the upper discriminator (VR10) to 7.0 volts.

6.1.4 Turn off 956A-201 power and connect the 956A-201 to the 897A detector to be tested using the cable referenced in 5.5 of section 4.0. Do not connect the high voltage connector to 956A-201 P4 (HV) at this time.

6.1.5 Remove jumper J3 from the header block on the 897-210-10 circuit board.

6.1.6 Place the DVM in the current measuring mode (200 mA range) and connect the DVM negative lead to J3-A. Connect the DVM positive lead to J3-B.

6.2 Detector Quiescent Current Drain

6.2.1 Apply AC power and allow a five minute warm-up period to elapse prior to proceeding.

6.2.2 Record the DVM current indication on the Data Sheet. The value must be less than 100 Ma. Turn off 956A-201 ratemeter power when this measurement has been completed and replace jumper J3 into the A-B position.

6.3 Jumper placement and local regulator Operation

6.3.1 Record verification on the Data Sheet that jumpers J1, J2 and J3 are all in the A-B positions.

6.3.2 Turn 956A-201 ratemeter power back on and allow a five minute warm-up to elapse prior to proceeding.

6.3.3 Connect the Digital Voltmeter (DVM) negative lead to the negative side of C1 (DC ground) and the positive lead to cathode of CR9. Verify 10 +1/- 0.5 volts and record verification on the Data Sheet.

6.4 Anti-jam Adjustment Range and Pre-calibration Setting.

6.4.1 Place the IC test extender over Z1 on the 897A-210-10 circuit board.

6.4.2 Connect the DVM negative lead to Z1 pin 12 and the DVM positive lead to Z1 pin 10.

6.4.3 Adjust potentiometer R41 fully counter-clockwise and verify a DVM indication of < 0.100 volts. Record the final reading on the Data Sheet.

6.4.4 Adjust potentiometer R41 fully clockwise and verify a DVM indication of > 2.9 volts. Record the final reading on the Data Sheet.

6.4.5 Adjust R41 for a DVM indication of 1 +/- 0.001 volts. Record the final setting on the Data Sheet. This value is the anti-jam starting threshold voltage.

6.5 Discriminator Adjustment Range and Final Setting.

6.5.1 Move the DVM negative lead to Z1 pin 8 and the DVM positive lead to Z1 pin 9. Adjust potentiometer R44 fully counter-clockwise and verify a DVM indication of < 0.100 volts. Record the final reading on the Data Sheet.

6.5.2 Adjust potentiometer R44 fully clockwise and verify a DVM indication of > 1:5 volts. Record the final value on the Data Sheet.

6.5.3 Adjust potentiometer R44 for a DVM indication of 0.5 +/- 0.01 volts and record the final setting value on the Data Sheet. This is the factory discriminator setting for all standard 897A detectors.

6.6 Anti-jam Trigger Threshold Verification.

6.6.1 Set the output of the precision voltage source or power supply to zero and connect the negative lead of the supply to the negative side of C1 (DC ground). Connect the positive lead of the supply to the ANODE of CR7.

6.6.2 Connect the DVM across the precision DC volt source to monitor the output. Set the range to 2 volts DC.

6.6.3 Connect the oscilloscope ground lead to the negative side of C1 (DC ground) and the probe to the junction of resistors R1 and R2 on the 897A-210-10 circuit board. Set the oscilloscope as follows:

Vertical gain: 1 volt/division
Input coupling: DC
Trigger mode: Auto
Sweep rate: 5 uS/division

6.6.4 Increase the supply output until the oscilloscope displays the anti-jam square wave output from the detector. Adjust the DC supply as required to determine the exact point of anti-jam START. When this point has been determined, record the DVM indication on the Data Sheet. The value displayed must be 1 +/- 0.01 volts.

6.7 Detector Output Pulse Height, Period and Symmetry.

6.7.1 With the detector remaining in the anti-jam state, verify a symmetrical square wave of > 4.5 volts peak with a period of less than 25 uS. Record the peak value of the output and the period noted on the Data Sheet.

6.8 Check Source Operation and Background Check.

6.8.1 Set the supply output to zero and disconnect the supply from the detector.

6.8.2 Turn off power to the 956A-201 ratemeter and connect the high voltage coaxial cable to the rear panel P4 jack. Turn ratemeter power back on after this connection has been made.

6.8.3 Verify that the check source is in the OFF position, that is , the brass pan will be over the circuit board and not the hole over the GM tube.

6.8.4 With the check source in the OFF position, place the function switch 956A-201 in position #8 and enter a 1 minute (6.00E1 second) count of the GM tube background. The background value must be greater than 1 CPM but less than 25 CPM. If a higher than allowable background value is counted, recheck the actual background of the area where testing is being performed. If the results are still not acceptable, replace the GM tube and repeat this step after a 15 minute warm-up period. Record the final background countrate on the Data Sheet.

6.8.5 Move the 956A-201 function switch out of position #8 and depress the check source push-button. Verify that the check source moves to the ON position over the hole in the circuit board. Repeat this test with the detector GM tube pointing upward, downward and in 12 o'clock, 3 o'clock, 6 o'clock and 9 o'clock horizontal positions. The source must activate in each position. Record verification of source activation on the Data Sheet for each of these six positions.

6.9 Re-install the detector into the housing and secure with at least one screw. Forward to the calibration department for source range calibration all detectors which have passed this procedure along with the Data Sheets.

6.10 Reject and repair/rework any detectors which have failed this procedure and re-test when repairs have been completed.

6.11 Obtain Q.A. review of completed detectors and Data Sheets which have passed this procedure. Forward accepted units, with completed Data Sheets, to the Calibration Department for source range calibration.

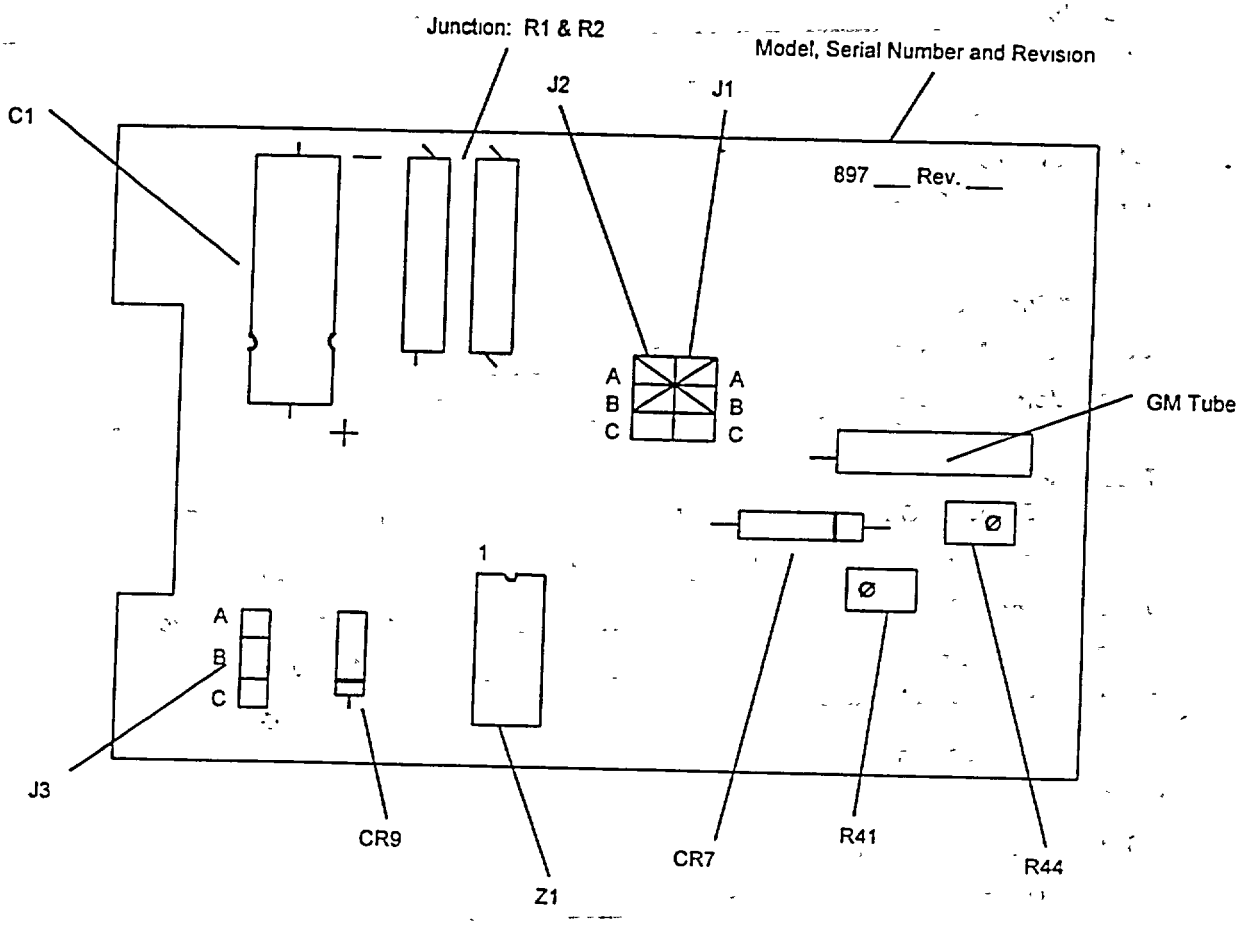

FIGURE 1

897A-210-10 Circuit Board

VICTOREEN, INC.
TITLE: ELECTRONIC TEST PROCEDURE FOR 897A-2X0 AND 897A-2X1 DETECTORS
CUSTOMER: N/A
DOCUMENT: TP897A REV. A

Test Data Sheet
TP897A for 897A-2X0 and 897-2X1 Detectors

Customer: _____ P.O. No.: _____
S.O. No.: _____ W.O. No.: _____
Model 897A- ____ Serial No.: _____

897A-210-10

Circuit Board Serial No.: _____ Revision Level: _____

Test Equipment

Oscilloscope Model No: _____ S/N: _____ Cal Due Date: _____
Digital Voltmeter Model: _____ S/N: _____ Cal Due Date: _____

Test Results

6.2.3	Detector Quiescent Current Draw	_____mA (100 mA max.)
6.3.1	Jumper Placement J1 ____(A-B),J2 ____(A-B),J3____(A-B)	
6.3.3	Local Zener Regulation	_____v (>9.5 and < 11.0 volts)
6.4.3	Anti-jam minimum setting	_____v (< 0.100 volts).
6.4.4	Anti-jam maximum setting	_____v (> 2.9 volts)
6.4.5	Anti-jam final setting	_____v (1 +/- 0.001 volts)
6.5.1	Discriminator minimum setting	_____v (< 0.100 volts)
6.5.2	Discriminator maximum setting	_____v (> 1.5 volts)
6.5.3	Discriminator final setting	_____v (0.5 +/0 0.01 volts)
6.6.4	Anti-jam trigger threshold	_____v (1 +/- 0.01 volts)
6.7.1	Detector output pulse height	_____v peak (4.5 minimum)
	Output square wave period	_____ uS (25 uS maximum)
6.8.4	Detector background CPM	_____ (> 1CPM / < 25 CPM)

6.8.5 Check source activation:

GM Tube up _____(yes) 12 o'clock _____ (yes) 6 o'clock _____ (yes)

GM Tube down _____(yes) 3 o'clock _____ (yes) 9 o'clock _____ (yes)

Performed By: _____ Date: _____

Q.A. Review By: _____ Date: _____

Appendix C
TEST PROCEDURES AND DATA

C.1 TEST PROCEDURES AND DATA

Test procedures listed in this appendix may be used for site equipment testing, alignment or trouble-shooting activities except as noted. Note that Test Firmware and the 942TS breakout box are required to perform TP956A-201-3. Note that Test Procedure TPS157033A2 requires a special noise generator and is not required to be performed in the field. Test Data is included for all electronic assemblies provided under contract.

<u>Test Procedures</u>

TP956A-201-3	Electronic Factory Test Procedure for Ratemeter
TP897A	Electronic Test Procedure for 897A-210/-211
LT956A/897A-21X	Loop Test Procedure using 848-8A Field Calb.

<u>Data Sheets</u>

TP956A-201-3	Data Sheets for pre-mod 956A-201 Ratemeters s/n 129, 130 and 133.
TP897A	Data Sheets for 897A-210 Detectors s/n 131, 132 and 100762
LT956A/897A-21X	Data Sheets for 956A-201-M1 s/n 104643 and 897A-210 s/n 131
	Data Sheets for 956A-201-M1 s/n 104644 and 897A-210 s/n 132
	Data Sheets for 956A-201-M1 s/n 104645 and 897A-210s/n 100762
TPS157033A2	Data Sheet for S157033A2 s/n 104899

INOVISION RADIATION MEASUREMENTS TITLE: TEST PROCEDURE FOR THE 956A-201 UNIVERSAL DIGITAL RATEMETER CUSTOMER: N/A DOCUMENT: TP956A-201-3 REV. 4	PAGE 1 OF 27

ISSUE DATE: JAN 18 2000

REVISION LIST

REV	ECO #	
4	9CR48-99	

	APPROVAL	DATE
RELIABILITY ENGINEER		11-12-99
MANUFACTURING ENGINEER		11-12-99
REGULATORY AFFAIRS ENGINEER		11-12-99

ISSUED BY: GEORGE BUCK

FILE COPY

INOVISION RADIATION MEASUREMENTS
TITLE: TEST PROCEDURE FOR THE 956A-201 UNIVERSAL DIGITAL RATEMETER
CUSTOMER: N/A
DOCUMENT: TP956A-201-3 REV. 4

RECORD OF REVISIONS

DOCUMENT REVISION LEVEL	ECO NUMBER	DESCRIPTION/PAGES AFFECTED
A		Original Issue (Adapted from TP942-100-3)
B	5CR52-96	Revised/Renumbered Table of Contents; Paragraph 9.4, Added New Section; namely, Anti Jam Bit Test, Renumbered remaining sections and paragraphs; Revised/Renumbered Pages 1 through 4 of Test Data Sheet
C	10CR28-97	Corrected Anti-Jam Test Signal Input to 55 Khz, Para. 16.5; Added Note to Para 2.0, and Para 4.14, for use on 956A-200 units.
4	9CR48-99	Added M&TE use to "SCOPE"; added second 4-20 mA column to Data Sheet ; deleted 956A-200 applicability from "SCOPE"

FILE COPY

TABLE OF CONTENTS

1.0 PURPOSE

The purpose of this procedure is to provide a uniform method to functionally test the Model 956A-201 Ratemeter.

2.0 SCOPE

This procedure is to be performed on all 956A-201 series Universal Digital Ratemeters prior to placing in stock. In addition; this procedure is to be used to document post repair testing of any 956A-201 series units returned for repair or calibration.

NOTE: **Refer to drawing 956A-201-106 for Ratemeter/Detector interconnections.**

3.0 RESPONSIBILITIES

3.1 Personnel performing this test must have a Technicians Skill Level 2 per S.O.P. 902.003.

3.2 Data generated by this procedure must be reviewed and approved by Q.A. prior to shipment to customer. A copy of the test Data Sheet shall be retained by Q.A. and placed in a job file.

4.0 EQUIPMENT REQUIRED

4.1 942TS-100 Test Set with interconnecting cables 942ATS-100-14 and 942TS-100-37.

4.2 Televideo Terminal (TV) or RS-232 Compatible Device.

4.3 942-200-80A Communications PCB Assembly with Test Cable.

4.4 Dual Channel Oscilloscope/Tektronix 465 or equivalent.

4.5 High Voltage Probe: Fluke 80K-6 or equivalent -- must be calibrated.

4.6 Wavetek 187 Signal Generator or equivalent.

4.7 Frequency Counter: Fluke 1900A or equivalent – must be calibrated.

Note: If the Function/Pulse generator used has a calibrated display, a calibrated frequency counter is not required.

4.8 Test Software 94094200200 (Latest Revision Level).

4.9 Test Leads, BNC terminated coaxial cables, etc.

4.10 Digital Multi-Meter (DMM): Fluke 8050A or equivalent – must be calibrated.

4.11 956A-201/897A-2XX Interconnecting cable per drawing 956A-201-106.

4.12 Right Angle Connector for 942-200-80A Board.

4.13 Detector: 897A-210 or 897A-220 shop test unit.

5.0 SET-UP (See Figure 1)

5.1 Set-up the Main PCB Assembly jumpers (Located in rear, right hand corner except JP-3, located near center of PCB Assembly) as follows:

JP-1,	None,	Momentary short for RESET
JP-2,	2-3,	Prom size (27C256)
JP-3,	ALL,	Sensitivity Select, Auto Acknowledge, No Fail, Alarms on C/S
JP-4,	2-3,	Positive Input Pulse
JP-5,	2-3,	Shield Ground
JP-6,	2-3,	Anti-Jam Fuse Disable for testing
JP-7,	2-3,	GM Detector Anti-Jam Pulse Select

5.2 Set-up Televideo (referred to as TV) or other RS-232 compatible device, as follows:

Press "F5" key for "SET UP".
Press "F2" key for "COMM".
Press Function keys to set up the following:

4800	4800	NONE	8	1 2	FDX HDX	X-ON
M.BAUD	P.BAUD	PARITY	D.BITS	S.BITS	MODE	PROTCL

Press "ALPHA LOCK" key. Observe a "*" in the Lower, Left Corner of the highlighted Menu Block (Televideo Only).

5.3 Set-up Signal Generator as follows:

A. Square Wave pulse
B. 1 volt peak positive pulse
C. DC offset: at ground reference
D. 100 kHz

5.4 Connect Line Cord to P3.

5.5 DC Power Supply Verification

5.5.1 Connect the DVM neg lead to the Ground point (black 18GA wires) located on the power supply assembly terminal block. Connect the DVM positive lead to the +5 point (blue 18 GA wires) located on the power supply assembly terminal block.

5.5.2 Apply power to the unit under test.

5.5.3 Verify a +5.00 VDC ± 0.100 VDC reading on the DVM. A single adjustment is VIA VR1 provided on the 5V power supply to trim all three supply outputs. Enter the final reading on the test data sheet.

5.5.4 Connect the DVM positive lead to the +15V terminal (red 18 GA wires). Verify a reading of +15V±0.75VDC. Enter the reading on test data sheet.

5.5.5 Connect the DVM positive lead to the -15VDC terminal (orange 18 GA wires). Verify a reading of -15VDC ±0.75 VDC. reading on the test Data Sheet.

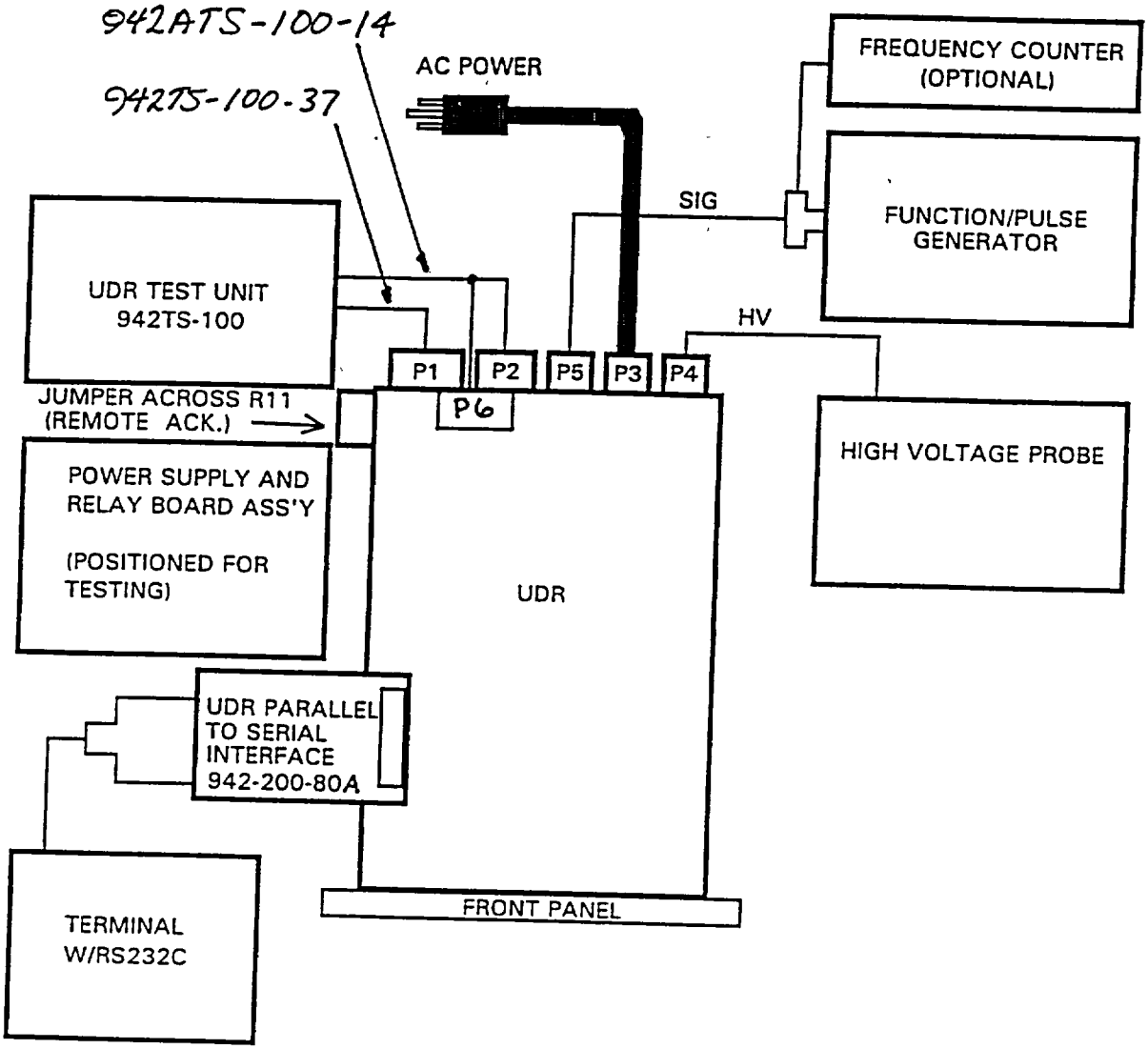

FIGURE 1

FILE COPY

TABLE I -- Serial Interface Baud Rate, P/N 942-200-80A

SWITCH POSITION				OUTPUT RATE
4	3	2	1	(BAUD RATE)
OFF	OFF	ON	ON	110
OFF	ON	OFF	ON	150
ON	OFF	OFF	ON	300
OFF	OFF	OFF	ON	600
ON	ON	ON	OFF	1200
ON	OFF	ON	OFF	2400
* ON	ON	OFF	OFF	4800
ON	OFF	OFF	OFF	9600

* Normal setting for test and operational modes.

NOTE: Switches 5, 7 and 8 should be in the OFF position while Switch 6 should be in the ON position.

6.0 WRITE CLOCK ADJUSTMENT

6.1 Apply Power to the UDR.

6.2 Adjust Oscilloscope for 2 V/DIV., .2 uS/DIV. Set trigger to Channel 1 for a negative going pulse.

6.3 Connect Channel 1 to U19-2 (/CLOCK).

6.4 Connect Channel 2 to U19-12 (/SHORT 02).

6.5 Adjust VR13 to obtain a 225 nS delay between the negative going edge of Channel 1 and the negative going edge of Channel 2 as shown in Figure 2. Paint VR13.

6.6 Circle result (Pass/Fail) on Data Sheet.

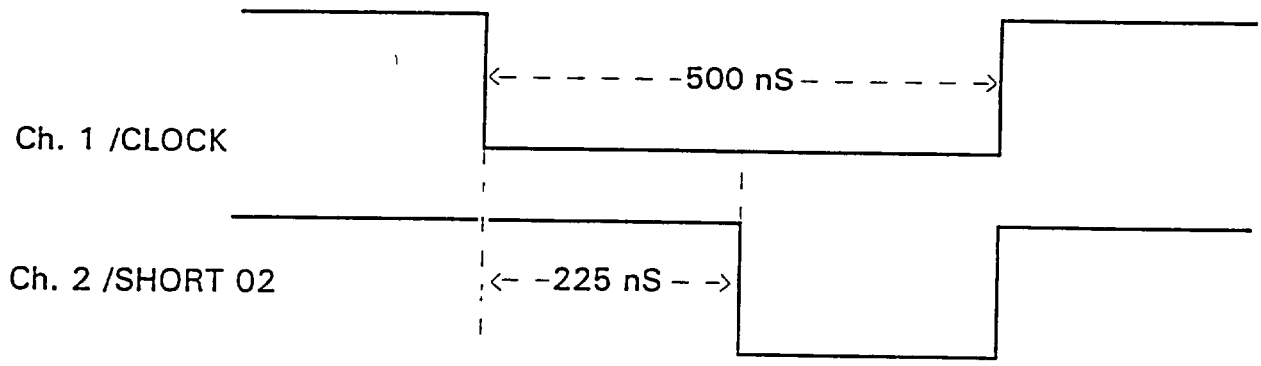

FIGURE 2

7.0 DISCRIMINATOR ADJUSTMENT

7.1 Connect DMM (+) lead to the "HI" test jack and the (-) lead to the "GND" test jack.

7.2 Adjust VR10, high discriminator, to both extremes verifying a range of approximately 3.6 V to 7.4 V. Record PASS or FAIL on the Data Sheet.

7.3 Adjust VR10 for 5 +/- 0.01 V and record the final value on the Data Sheet.

7.4 Connect DMM (+) lead to the "LO" test jack.

7.5 Adjust VR11, low discriminator, to both extremes verifying a range of approximately 0.07 V to 1.0 V. Record PASS or FAIL on the Data Sheet.

7.6 Adjust VR11 for 0.5 +/- 0.001 V and record the final value on the Data Sheet.

8.0 INPUT AMPLIFIER ADJUSTMENT

8.1 Using a test lead, short "P5 SIG." Input to chassis GND.

8.2 Connect DMM (+) lead to "PULSE" test point (Located near JP6).

8.3 Adjust VR9 for .0000 V +/- .0001 V. Paint VR9.

8.4 Record value on Data Sheet.

8.5 Remove test lead from "P5 SIG.". Connect Signal Generator to "P5 SIG.".

8.6 Set-up Oscilloscope for .2 V/DIV., 2 uS/DIV.

8.7 Connect Oscilloscope Channel 1 to "P5 SIG.".

8.8 Connect Oscilloscope Channel 2 to "PULSE" test point.

8.9 Adjust VR8 so that both waveforms are at equal amplitudes (Unity Gain). Paint VR8.

8.10 Circle result (Pass/Fail) on Data Sheet.

9.0 ANTI-JAM ADJUSTMENT

9.1 Connect DMM (+) lead to the right side of R94.

9.2 Adjust VR12 to both extremes verifying a range of approximately 0.0 V to 1.5 V.

9.3 Circle result (Pass/Fail) on Data Sheet.

9.4 Adjust VR12 for 0.875 V +/- .001 V. Paint VR12.

9.5 Record value on Data Sheet.

9.6 Turn UDR Power Off and install Test Software 94094200 into U23.

9.7 Connect 942TS-100 Test Set cables to the "P1 I/O", "P2 DET.", and "P6 AUX" connectors located on rear panel. See Figure 1.

9.8 On the 942-200-80A Communications PCB Assembly, place SW1-3, 4, and 6 in the ON position. See Table 1.

9.9 Connect the 942-200-80A Communications PCB Assembly to J3 of Main PCB Assembly via the Right Angle Connector. Connect the Televideo (Referred to as TV) RS-232 cable to the 942-200-80A's J4.

10.0 TEST 1: RAM TEST

10.1 Apply Power to UDR. TV should prompt. Select "M" for "TEST MENU". Select "1" for "BASE UNIT TEST" Menu. Menu will be displayed.

RAM TEST verifies read and write functions and data patterns in RAM address 0090 through 1FFF. Data patterns are 00, FF, 55, AA and 00-FF repeated. Error addresses will be displayed on the TV.

10.2 Select subtest "1".

10.3 Verify all RAM locations pass.

FILE COPY

10.4 Circle result (Pass/Fail) on Data Sheet.

11.0 TEST 3: BAR GRAPH TEST

BAR GRAPH TEST activates each segment from left to right starting with Green, then Amber, and then Red.

11.1 Select subtest "3".

11.2 Verify that all Bar Graph Segments activate in proper sequence and color.

11.3 Circle result (Pass/Fail) on Data Sheet.

12.0 TEST 4: DISPLAY TEST

DISPLAY TEST cycles each character from right to left across the display. Character sequence is 1, 2, 3, 4, 5, 6, 7, 8, 9, -, E, H, L, P, ., :

12.1 Select subtest "4".

12.2 Verify that all units properly display each character and in the right sequence.

12.3 Circle result (Pass/Fail) on Data Sheet.

13.0 TEST 5: SWITCH TEST

SWITCH TEST reads status changes of the UDR's front panel switches and the 942TS-100 Test Set's REMOTE ACK switch.

13.1 Connect jumper wire across the R11 position (Located in rear, left hand corner).

13.2 Select subtest "5".

13.3 Press each front panel switch several times and verify that the TV displays the correct switch each time.

13.4 Press the 942TS-100 REMOTE ACK switch several times and verify that the TV displays the correct switch each time. Remove the jumper wire from across R11 position.

13.5 Circle result (Pass/Fail) on Data Sheet.

14.0 TEST 6: INDICATOR/BACKLITE/FAIL TEST

INDICATOR/BACKLITE/FAIL TEST cycles through front panel indicators/backlites in sequence as displayed on the TV. The fail light which is normally on will extinguish by this test. It will time out and re-activate in approximately 2 seconds. The Warn indicator is Amber.

14.1 Select subtest "6".

14.2 Verify each indicator/backlite activates as the TV display status indicates. Verify FAIL LED operation.

14.3 Circle result (Pass/Fail) on Data Sheet.

15.0 TEST 7: COUNTER/DISCRIMINATOR TEST

COUNTER TEST displays on the TV the input frequency in Hz, until any key is depressed. DISCRIMINATOR TEST involves adjusting the input signal amplitude below, within, and above the discriminator settings (262,126 Hz indicates overflow of counters). Connect Oscilloscope Channel A to P5 signal.

15.1 Adjust Signal Generator for a +400 mV pulse at 1 KHz.

15.2 Select subtest "7".

15.3 Verify TV reads 000000 HZ. Enter result on Data Sheet.

15.4 Adjust Signal Generator amplitude for a +1 V.

15.5 Verify TV reads 001000 Hz +/- 000010 Hz. Enter result on Data Sheet.

15.6 Adjust Signal Generator frequency for 100 Hz.

15.7 Verify TV reads 000100 Hz +/- 00001 Hz. Enter result on Data Sheet.

15.8 Adjust Signal Generator frequency for 10 kHz.

15.9 Verify TV reads 010000 Hz +/- 000100 Hz. Enter result on Data Sheet.

15.10 Adjust Signal Generator frequency for 100 kHz.

15.11 Verify TV reads 100000 +/- 001000 Hz. Enter results on Data Sheet.

15.12 Adjust Signal Generator frequency for 280 kHz.

15.13 Verify TV reads 262126 Hz (Overflow). Enter result on Data Sheet.

15.14 Adjust Signal Generator amplitude for a +5.5 V.

15.15 Verify TV reads 000000 Hz +/- 000010 Hz. Enter result on Data Sheet.

15.16 Disconnect Signal Generator from "P5 SIG.".

15.17 Adjust VR10 for a 7 +/- 0.01V DVM indication. Neg probe on "GND" test jack, and positive probe on "HI" test jack. Record the final value on the Data Sheet.

15.18 Verify VRII adjustment for 0.5 +/- 0.001 V. DVM Neg probe on "GND" test jack and positive probe on "LO" test jack. Record the final value on the Data Sheet.

FILE COPY

16.0 ANTI JAM BIT TEST

This test exercises the anti jam circuitry by injecting a frequency greater than the anti jam voltage. The anti jam bit is D1 of location 4008H.

16.1 Cycle power on the UDR.

16.2 Adjust signal generator to 40 KHz with a +5V peak.

16.3 Type in 4008/.

16.4 The response will be 05 after the " / ". Record on Data Sheet.

16.5 Increase signal generator to 55 KHz.

16.6 Type in 4008/.

16.7 The response will be 07 after the " / ". Record on Data Sheet.

16.8 Decrease frequency generator to 40 KHz.

16.9 Cycle power on the UDR.

16.10 Type in 4008/.

16.11 The response will be 05 after the " / ". Record on Data Sheet.

16.12 Type "M" and select the base unit test.

17.0 TEST 8: D/A CONVERTER 4-20 mA/0-10 V OUTPUT TEST

The D/A CONVERTER TEST sets the high scale and low scale output for calibration of two 4-20 mA outputs and one 0 -10 V output. The 942TS-100T Set has had 250 Ohm Load Resistors added to the 4-20 mA output connections. The measurements will be made in volts even though the TV instructions call for current. Verification of low, mid, and high scale are performed. Follow calibration instructions displayed on TV.

Refer to following table for correct conversions and tolerances.

4-20 mA OUTPUTS

SCALE	CURRENT	VOLTAGE
Low	4 mA	1.000 V +/- .001 V
Mid	12 mA	3.000 V +/- .015 V
High	20 mA	5.000 V +/- .001 V

0-10 V OUTPUT

SCALE	VOLTAGE
Low	.0000 V +/- .0001 V
Mid	5.000 V +/- .030 V
High	10.000 V +/- .001 V

17.1 Select subtest "8".

17.2 Follow TV calibration instructions.

17.3 Record Calibration Verification values on Data Sheet.

17.4 Paint VR1, VR2, VR4, VR5, VR6, and VR7.

18.0 TEST 9: EEPROM TEST

EEPROM TEST writes data patterns to the EEPROM device then prompts the user to cycle power. The program is re-entered by the user and a verification of data patterns is performed by the test program.

CAUTION
THIS TEST WILL DESTROY PREVIOUS SETPOINTS.

18.1 Select subtest "9".

18.2 Select "W".

18.3 Turn UDR Off, wait one minute, then turn on.

18.4 TV should prompt. Select "M" for "TEST MENU". Select "1" for "BASE UNIT TEST" Menu. Menu will be displayed.

18.5 Select subtest "9".

18.6 Select "V".

18.7 Result will be displayed on TV. Circle result (Pass/Fail) on Data Sheet.

19.0 TEST A: NON-MASKABLE INTERRUPT VERIFICATION (NMI) TEST

The NMI VERIFICATION TEST measures the time interval between interrupts and displays this time period in mS on the TV. NMI occurs at 8 Hz rate, therefore, the terminal should display 125 mS.

19.1 Select subtest "A".

19.2 Verify TV reads 125 mS +/- 1 mS.

19.3 Record result on Data Sheet.

20.0 TEST B: HIGH VOLTAGE POWER SUPPLY TEST

The HIGH VOLTAGE POWER SUPPLY TEST verifies the voltage range as well as testing the HV Shutdown function.

20.1 Connect HV Probe (-) lead to "GND" test jack. Connect HV Probe (+) lead to "P4 HV" MHV Connector.

20.2 Select subtest "B".

20.3 Adjust R5 (HV PCB Assy.) for a reading of 600 V ± 1 V.

20.4 Record value on Data Sheet.

20.5 Connect DMM (+) lead to the "HV TEST" test jack (Test jack provides a 1000:1 DC voltage measurement). Verify a DMM reading of 0.600 V ± .060 V.

20.6 Record value on Data Sheet.

20.7 Adjust R5 to both extremes verifying a voltage range of 400 V to 1800 V.

20.8 Record adjustment minimum and maximum values on the Data Sheet.

20.9 Re-adjust HV for 550 V +/- 1 Volt.

20.10 Enter "S" on TV. Verify that HV has been shut down.

20.11 Circle result (Pass/Fail) on Data Sheet.

21.0 TEST C: DATA ENTRY TEST

The DATA ENTRY TEST verifies operation of the Data Entry switches ("DIGIT", "VALUE", "ENTER") and the "FUNCTION" switch.

21.1 Select subtest "C".

21.2 Press each Data Entry switch several times and verify that TV displays correct entries.

21.3 Circle result (Pass/Fail) on Data Sheet.

21.4 Select "F" for Function switch test. Verify correct "FUNCTION" switch position. Repeat test for each "FUNCTION" switch position 0 through F.

21.5 Circle result (Pass/Fail) on Data Sheet.

22.0 TEST D: RELAY TEST

The RELAY TEST sets each relay from de-energized to energized state in sequence as displayed on the TV. The 942TS Test Set provides the relay status information. Note that the 956A-201 checksource will not cause a lamp state change to occur during this test. Checksource function is tested with a shop detector in Section 24.10.

22.1 Select subtest "D".

22.2 Hold down the "D" key for several executions of the test.

22.3 Verify each relay and its contacts response according to TV information displayed.

22.4 Circle result (Pass/Fail) on Data Sheet.

23.0 TEST F: JUMPER CONFIGURATION TEST

The JUMPER CONFIGURATION TEST verifies whether or not JP3 Jumpers 1-5 are installed and displays the appropriate position on the TV.

23.1 Select subtest "F".

23.2 Verify that all JP3 jumpers are installed.

23.3 Remove all JP3 jumpers. Repeat test and verify that all jumpers are removed.

23.4 Install one jumper at a time and verify the position of that jumper is correct by repeating the test.

23.5 Circle result (Pass/Fail) on the Data Sheet.

24.0 OPERATING SOFTWARE TEST

24.1 Remove Power from the UDR. Remove DMM leads. Remove 942TS Test Set connections. Remove 942-200-80A Communications PCB Assembly and angle bracket.

24.2 Replace Test Software with Operating Software. Standard operating software is 94095603.

24.3 Hold down the "ENTER" Key and then apply power to UDR (Automatically sets "HIGH" and "WARN" Alarm Levels). Turn Power Off then re-apply Power.

24.4 0.00 mR/h should be displayed and the "RANGE" LED should be On.

24.5 Depress the "HIGH" button. Verify 1.00E3 mR/h.

24.6 Depress the "WARN" button. Verify 1.00E1 mR/h.

24.7 Depress the "CHECK SOURCE" button. Verify CHECKSOURCE LED turns On.

FILE COPY

24.8 Circle result (Pass/Fail) on Data Sheet.

24.9 Sign off Travelers and Data Sheet.

24.10 Send unit to Production for Final Assembly.

25.0 BURN-IN

25.1 The 956A-201 UDR Final Assembly will be installed in a 948-1 Rack Chassis and burned in for 100 hours.

25.2 Visual Assembly for cosmetic defects and loose hardware. Verify that correct Travelers and Data Sheets are properly completed. Record operational firmware number and revision level on Data Sheet and Travelers.

25.3 Place JMP-6 in the 1-2 position (Enable anti-jam circuit). Install the UDR into a 948-1 Rack Chassis.

25.4 Apply Power. 0.00 mR/h should be displayed and the "RANGE" LED should be On (If EEEEE is displayed, Anti-Jam Fuse F1 is defective. Replace if necessary.) After approximately five (5) minutes, the "FAIL" LED should turn On.

25.5 Depress the "HIGH" button. Verify 1.00E3 mR/h.

25.6 Depress the "WARN" button. Verify 1.00E1 mR/h.

25.7 Depress the "CHECK SOURCE" button. Verify LED turns On.

25.8 Log the start time of the burn-in on the Data Sheet.

NOTE

Quality Assurance is to be notified of any failures noted during burn-in. The entire procedure, Section 25, must be repeated in the event of a failure.

25.9 After 100 hours, log burn-in stop date and time, and repeat Steps 24.5 through 24.7. Remove power. Using an interconnection cable wired per drawing 956A-201-106, connect the 956A-201 under test to a shop 897A-210 or 897A-220 detector.

25.10 Apply Power. Verify that the UDR responds to the Detector by activating the 956A checksource push button and noting the increase in displayed value.

25.11 Remove Power. Remove the Interconnect Cable and the Line Cord. UDR is now ready to be cleaned up and packaged.

25.12 Circle results (Pass/Fail) on Data Sheet.

26.0 DOCUMENTATION

26.1 After final review, Quality Assurance shall file the completed original document in the Quality Assurance Sales or Job File.

FILE COPY

956A-201 TEST DATA SHEET 1, Page 1 of 4

PART NUMBER_____

SERIAL NUMBER _____

DMM Model _____ S/N _____ Cal. Due Date ___/___/___

Scope_____ S/N _____ Cal. Due Date ___/___/___

H.V. Probe _____ S/N _____ Cal. Due Date ___/___/___

Frequency Counter _____ S/N _____ Cal. Due Date ___/___/___

Test Software 940942200200 Rev. Level _____

Operating Software _____ Rev. Level _____

5.5 SET-UP

+5VDC ± 0.100VDC _____V

+15VDC ± .75VDC _____V

-15VDC ± .75VDC _____V

6.0 WRITE CLOCK ADJUSTMENT

6.6 VR13 Adjustment Pass/Fail

7.0 DISCRIMINATOR ADJUSTMENT

7.2 VR10 Adjustment Pass/Fail

7.3 VR10 Final Setting _____(5 ± 0.01 V)

7.5 VR11 Adjustment Pass/Fail

7.6 VR11 Final Setting _____(0.5 ± 0.01 V)

8.0 INPUT AMPLIFIER ADJUSTMENT

8.4 VR9 Adjustment .0000 V +/- .0001 V _____V

8.10 VR8 Adjustment Unity Gain Pass/Fail

9.0 ANTI-JAM ADJUSTMENT

9.3 VR12 Adjustment Range Pass/Fail

9.5 VR12 Adjustment 0.875 V +/- .0001 V _____V

10.0 TEST 1: RAM TEST

10.4 RAM Locations Pass/Fail

FILE COPY

956A-201 TEST DATA SHEET Page 2 of 4

11.0 TEST 3: BAR GRAPH TEST

11.3	Bar Graph Segment Sequence and Color	Pass/Fail

12.0 TEST 4: DISPLAY TEST

12.3	Display Characters and Sequence	Pass/Fail

13.0 TEST 5: SWITCH TEST

13.5	Front Panel Switches and REMOTE ACK.	Pass/Fail

14.0 TEST 6: INDICATOR/BACKLITE/FAIL TEST

14.3	Indicator/Backlite/Fail LED Operation	Pass/Fail

15.0 TEST 7: COUNTER/DISCRIMINATOR TEST

15.3	Verify 000000 Hz	_____Hz
15.5	Verify 001000 Hz +/- 000010 Hz	_____Hz
15.7	Verify 000100 Hz +/- 000001 Hz	_____Hz
15.9	Verify 010000 Hz +/- 000100 Hz	_____Hz
15.11	Verify 100000 +/- 001000 Hz	_____Hz
15.13	Verify Overflow 262126 Hz	_____Hz
15.15	Verify 000000 Hz +/- 000010 Hz	_____Hz
15.17	VR10 Adjustment, 7 V +/- 0.01 V	_____V
15.18	VR11 Adjustment, 0.5 V +/- 0.001 V	_____V

16.0 ANTI JAM BIT TEST

16.4	Verify 05 displayed	_____
16.7	Verify 07 displayed	_____
16.11	Verify 05 displayed	_____

FILE COPY

956A-201 TEST DATA SHEET Page 3 of 4

17.0 TEST 8: D/A CONVERTER 4-20 mA/0-10 V OUTPUT TEST

17.3 Calibration Verification, Analog Outputs:

4-20 mA OUTPUTS #1 and #2

SCALE	CURRENT	VOLTAGE SPEC.	Output #1	Output #2
Low	4 mA	1 +/- .001 V	_____V	_____V
Mid	12 mA	3 +/- .010 V	_____V	_____V
High	20 mA	5 +/- .001 V	_____V	_____V

0-10 V OUTPUT

SCALE	VOLTAGE SPEC.	VALUE
Low	.0000 V +/- .0001 V	_____V
Mid	5.000 V +/- .030 V	_____V
High	10.000 V +/- .001 V	_____V

18.0 TEST 9: EEPROM TEST

18.7 Write and Verify Pass/Fail

19.0 TEST A: NON-MASKABLE INTERRUPT VERIFICATION (NMI) TEST

19.3 Verify 125 mS +/- 1 mS Pass/Fail

20.0 TEST B: HIGH VOLTAGE POWER SUPPLY TEST

20.4 R5 Adjustment/"P4 HV" _____V

20.6 "HV TEST" Jack (0.600 +/- 0.010 V) _____ V

20.8 R5 Adjustment (400 V to 1800 V) ____min ____max

20.11 HV Shut Down Pass/Fail

FILE COPY

956A-201 TEST DATA SHEET Page 4 of 4

21.0 TEST C: DATA ENTRY TEST

21.3	DIGIT, VALUE, and ENTER Switches	Pass/Fail
21.5	FUNCTION Switch	Pass/Fail

22.0 TEST D: RELAY TEST

22.4	Relay Response	Pass/Fail

23.0 TEST F: JUMPER CONFIGURATION TEST

23.5	JP3 Jumpers	Pass/Fail

24.0 OPERATION SOFTWARE TEST

24.8	Display Reading, "RANGE" LED HV Reading, "High", "Warn", "Rate" Values, Check Source LED	Pass/Fail

25.0 BURN-IN

25.8	Burn-in Start Date/Time	_____
25.9	Burn-in Stop Date/Time)	_____
25.10	Check Source Function	Pass/Fail
25.12	No failures observed during burn-in and Post burn-in tests.	Pass/Fail

Performed By _____ Date ___/___/___

Q.A. Review By _____ Date ___/___/___

FILE COPY

LOOP TEST PROCEDURE FOR
955A LOW RANGE GM AREA MONITORS

FILE COPY

REV. LEVEL	ECO #	DESCRIPTION/PAGES AFFECTED
1	1882	Initial Release

ENGINEERING		DATE 3-9-01
MANUFACTURING		DATE 3-12-01
QUALITY ASSURANCE		DATE 3-12-01
RADIATION SAFETY OFFICER		DATE

Inovision Radiation Measurements	DATE 3/6/01	TITLE Loop Test Procedure for 955A Low Range GM Area Monitors

REV	ECO NO.	RELEASED FOR PRODUCTION	DOC CTRL	SHEET	NO.	SIZE
1	1882			1 of 5	LT956A/897A-21X	TP

1 PURPOSE

The purpose of this procedure is to test and document the operation of a 955A series Low Range GM Area Monitoring channel. GM Detector models covered under this procedure include, but are not limited to, 897A-210 and 897A-221. Consult Systems Engineering if doubt exists as to the applicability of this procedure to a specific detector type not listed. Ratemeters covered under this procedure are models 956A-201 and 956A-201-M1.

2 SCOPE

2.1 This procedure is to be performed whenever complete 955A GM area monitoring channels are to be provided. The following items are verified through the performance this procedure:

2.2 All analog outputs.

2.3 Alert, Warn and Fail Alarm operation.

2.4 Remote Alarm operation (if applicable)

2.5 Overange and Overrange Acknowledge Function

2.6 Ratemeter digital display and bar graph.

3 RESPONSIBILITIES

3.1 Personnel performing this procedure shall have a Technicians Skill Level 1 per QSP-18-01.

3.2 Data generated by this test must be reviewed and approved by Q.A. prior to shipment. In addition, Q.A. has the responsibility of maintaining individual detector test data in a job file.

3.3 The personnel performing this procedure must be authorized , dosimetry equipped radiation workers. All work performed using 848-8 Field Calibrators shall be in accordance with Radiation Safety Program and under the approval of the RSO or assistant RSO.

4 ENVIRONMENTAL CONDITIONS

4.1 Environmental conditions shall be the prevailing laboratory ambient. Work conducted using the 848-8/8A Field Calibrators must be performed within a secure, controlled access area.

5 REQUIRED EQUIPMENT

Digital Multimeter (DMM) : Fluke 8050A or equivalent – must be a calibrated device.

5.1 956A-200 Series Digital Ratemeter (UDR) to be tested.

5.2 897A-220 (or 897A-221) Detector to be tested.

5.3 956A to 897A Interface Cable (shop test cable or fabricated cable assembly to be shipped with channel)

5.4 Shop (or Customer) 848-8A 10 mCi Field Calibrator and Shop (or Customer) 848-8 100 mCi Field Calibrators – must have calibration data attached.

5.5 UDR AC power cord set.

5.6 956 Series UDR to 897 Series Detector interconnection cable.

5.7 848-8-105 (or 848-8-400 for 897A-211 Detector) GM Detector Adapter.

5.8 High Voltage Probe : Fluke 80K-6 or equivalent – must be a calibrated device.

5.9 942TS-100 w/ 942A Series Test Cables.

5.10 Drawing 955A-3 Loop Diagram for interconnection of channel components.

6 PROCEDURE

6.1 Record the Customer, Customer P.O. number, S.O. number and W.O. number on the data sheet.

6.2 Record the model and serial number of the Ratemeter, Detector and Remote Alarm (if applicable) to be tested on the data sheet. In addition, record the serial numbers of the 848-8A and 848-8 Field Calibrators on the Data Sheet as well as the current, decay corrected dose rates for the three positions of the 848-8A Field Calibrator. The 848-8 100 mCi calibrator rates are not required as it is only used to overrange the channel under test.

6.3 Record the model, serial number, calibration date and calibration due date of the Digital Multimeter (DMM) and High Voltage Probe on the data sheet.

6.4 Prior to connecting the ratemeter to the detector (and remote alarm if applicable), adjust the high voltage supply on the 956A series ratemeter to 575 ± 5 volts. Adjust the 956A upper discriminator (VR10) to 7 ± 0.1 volts and the lower discriminator (VR11) to 0.5 ± 0.05 volts. Record High Voltage and Discriminator settings on the Data Sheet. Remove the anti-jam jumper J7 to prevent the anti-jam fuse from blowing when channel overrange is tested. Connect the 942TS-100 Test Fixture to the P1 and P6 rear panel connectors on the 956A ratemeter.

6.5 Turn off 956A and 942TS-100 AC power and connect the 956A series ratemeter to the 857-21X series detector using the 956A/897A cable and the 958 series remote alarm (if applicable) as shown in Loop Diagram 955A-3.

6.6 Turn on ratemeter AC power and allow a 10 minute warm-up period to elapse prior to taking and data.

NOTE

Analog outputs are monitored at the 942TS-100. If a remote alarm is connected, the 0-10 VDC output drives the remote alarm meter and is not available at the 942TS test point. Both 4-20 mA test points are terminated with 250Ω resistors inside the 942TS-100 and are read as 1-5 VDC outputs.

6.7 Enter the following setpoints into the ratemeter Function Switch positions :

Switch Position	Parameter	Value
0	High Alarm	1.00E2 (Warn Alarm value must be set first)
1	Warn Alarm	2.00E1
2	Tau/Dead Time	Obtain value from CAL-GM6 Data Sheet
3	Analog Full Scale	1.00E3
4	Overrange	1.00E3
5	Conversion Constant	Obtain value from CAL-GM6 Data Sheet
7	Analog Low Scale	1.00E-2
9	Underrange	1.00E-2

6.8 Place the required adapter (848-8-105 or 848-8-400) on the 848-8A Field Calibrator locating acorn nuts and place the detector into the adapter.

6.9 With the 848-8A Field Calibrator in the CLOSED position, complete column 1 of Table 1 on the Data Sheet. Enter N/A in boxes when no remote alarm or analog output option is to be provided.

6.10 Unlock the 848-8A Field Calibrator and place the calibrator in the MID position. Complete column 2 on the Data Sheet.

6.11 Place the 848-8A Field Calibrator in the OPEN position and complete column 3 on the Data Sheet.

6.12 Close the 848-8A Field Calibrator and complete column 4 on the Data Sheet.

6.13 With the 848-8A remaining in the CLOSED position, depress the 956A Acknowledge pushbutton and complete column 5 on the Data Sheet.

6.14 With the 848-8A remaining in the CLOSED position, disconnect the signal coax cable from the 956A rear panel connector P5. After six (6) minutes have elapsed, complete column 6 on the Data Sheet.

6.15 Reconnect the signal coax to P5 on the 956A rear panel and complete column 7 on the Data Sheet.

6.16 Place the adapter and detector into the 100 mCi 848-8 Field Calibrator. Unlock the calibrator and place it in the OPEN position. Complete column 8 on the Data Sheet.

6.17 Close the 100 mCi 848-8 Field Calibrator and place the adapter and detector back into the CLOSED 848-8A Field Calibrator. After one minute , depress the acknowledge pushbutton and complete column 9 on the data sheet.

6.18 Remove the detector from the 848-8A Field Calibrator. Remove the keys from both calibrators and return them to their secure storage location.

6.19 Turn off 956A ratemeter power and reinstall anti-jam jumper J7. Disconnect all external cabling from the ratemeter, detector and remote alarm (if applicable). Sign and date the Data Sheet.

6.20 Forward the document package to Quality Assurance for review and signature.

Attachment

TEST DATA SHEET: LT956A/897A-21X

Customer _____ Customer P.O.No.: _____

S.O. No.: _____ IRM W.O. No.: _____

6.2

956A Series Model No. _____ Serial No. _____

897A-21X Series Model No. _____ Serial No. _____

958 Series Remote Alarm Model No. _____ Serial No. _____

848-8A Serial No. _____ CLOSED position current dose rate _____ mR/h

MID Position current dose rate _____ mR/h

OPEN Position current dose rate _____ mR/h

848-8 100 mCi Calibrator Serial No. _____

6.3

Test Equipment	Model	Serial No.	Cal. Date	Cal. Due Date
Digital Multimeter	_____	_____	_____	_____
High Voltage Probe	_____	_____	_____	_____

6.4 H.V. _____ V (575 ± 5 VDC) Low Disc. _____ V(0.5 ± 0.05 VDC) High Disc. _____ V(7 ± 0.1 VDC)

956A Jumper J7 _____ (Removed)

6.7

Switch Position	Parameter	Value
0	High Alarm	_____ (1.00E2 mR/h)
1	Warn Alarm	_____ (2.00E1 mR/h)
2	Tau/Dead Time	_____ (Obtain from Detector CAL-GM6 Data)
3	Analog Full Scale	_____ (1.00E3 mR/h)
4	Overange	_____ (1.00E3 mR/h)
5	Conversion Constant	_____ (Obtain from Detector CAL-GM6 Data)
7	Analog Low Scale	_____ (1.00E-2 mR/h)
9	Underrange	_____ (1.00E-2 mR/h)

ENGINEERING		DATE 3-8-01
MANUFACTURING		DATE 3-12-01
QUALITY ASSURANCE		DATE 3/12/01
RADIATION SAFETY OFFICER	N/A	DATE N/A

Inovision Radiation Measurements		DATE 3/6/01	TITLE Loop Test Procedure for 955A Low Range GM Area Monitors		
REV 1	ECO NO. 1882	RELEASED FOR PRODUCTION	DOC CTRL	SHEET 1 of 2	NO LT956A/897A-21X	SIZE TP

Attachment
TEST DATA SHEET: LT956A/897A-21X

Table 1

	Closed 848-8A	Mid 848-8A	Open 848-8A	Closed Unack.	Closed Ack.	Signal Disconn.	Signal Reconn.	Channel Overrange	Overrange Recovery
UDR mR/h								EEEEE	
Remote mR/h								Full Scale	
Analog Output 1								Full Scale	
Analog Output 2								Full Scale	
Analog 0-10 V								Full Scale	
Analog Option								Full Scale	
Warn Indicator	Off	Flashing	Flashing	Flashing	Off	Off	Off	Flashing	Off
Warn Relay	NO	NC	NC	NC	NO	NO	NO	NC	NO
Alarm Indicator	Off	Off	Flashing	Flashing	Off	Off	Off	Flashing	Off
Alarm Relay	NO	NO	NC	NC	NO	NO	NO	NC	NO
Aux. Relay	NO*	NO*	NC*	NC*	NO*	NO*	NO*	NC*	NO*
Range Indicator	Off	Off	Off	Off	Off	On	Off	On	Off
Fail Indicator	Off	Off	Off	Off	Off	On	Off	Off	Off
Fail Relay	NO	NO	NO	NO	NO	NC	NO	NO	NO
Bargraph	Green	Amber	Red	Red	Green	OFF	Green	ALL Red	Green
Remote Lamp	Off	Off	On	On	Off	Off	Off	On	Off
Remote Sonalert	Off	Off	On	On	Off	Off	Off	On	Off

NO = Normally Open Lamp Illuminated, NC= Normally Closed Lamp Illuminated , * Aux Relay is "RATE" on Test Fixture.

Performed by _____ Date_____

Q.A. Review by _____ Date_____

956A-201 TEST DATA SHEET 1, Page 1 of 4

PART NUMBER 956A-201
SERIAL NUMBER 129
DMM Model FLUKE 8600A S/N 06252236 Cal. Due Date 04/04/2001
Scope TEKTRONIX 2245A S/N B022680 Cal. Due Date 09/19/2001
H.V. Probe FLUKE 80K-6 S/N IRM1285 Cal. Due Date 07/20/2001
Frequency Counter FLUKE 1900A S/N 4130013 Cal. Due Date 01/10/2001
Test Software 940942200200 Rev. Level C
Operating Software 94095603 Rev. Level B

5.5 SET-UP

+5VDC ± 0.100VDC	4.99	V
+15VDC ± .75VDC	15.460	V
-15VDC ± .75VDC	-15.200	V

6.0 WRITE CLOCK ADJUSTMENT

6.6 VR13 Adjustment — Pass/Fail

7.0 DISCRIMINATOR ADJUSTMENT

7.2 VR10 Adjustment — Pass/Fail
7.3 VR10 Final Setting 5.00 (5 ± 0.01 V)
7.5 VR11 Adjustment — Pass/Fail
7.6 VR11 Final Setting 0.500 (0.5 ± 0.01 V)

8.0 INPUT AMPLIFIER ADJUSTMENT

8.4 VR9 Adjustment .0000 V +/- .0001 V 0.000 V
8.10 VR8 Adjustment Unity Gain — Pass/Fail

9.0 ANTI-JAM ADJUSTMENT

9.3 VR12 Adjustment Range — Pass/Fail
9.5 VR12 Adjustment 0.875 V +/- .0001 V 0.875 V

10.0 TEST 1: RAM TEST

10.4 RAM Locations — Pass/Fail

FILE COPY

956A-201 TEST DATA SHEET Page 2 of 4

11.0 TEST 3: BAR GRAPH TEST

11.3 Bar Graph Segment Sequence and Color — Pass/Fail

12.0 TEST 4: DISPLAY TEST

12.3 Display Characters and Sequence — Pass/Fail

13.0 TEST 5: SWITCH TEST

13.5 Front Panel Switches and REMOTE ACK. — Pass/Fail

14.0 TEST 6: INDICATOR/BACKLITE/FAIL TEST

14.3 Indicator/Backlite/Fail LED Operation — Pass/Fail

15.0 TEST 7: COUNTER/DISCRIMINATOR TEST

15.3	Verify 000000 Hz	0 Hz
15.5	Verify 001000 Hz +/- 000010 Hz	1000 Hz
15.7	Verify 000100 Hz +/- 000001 Hz	100 Hz
15.9	Verify 010000 Hz +/- 000100 Hz	10K Hz
15.11	Verify 100000 +/- 001000 Hz	100K Hz
15.13	Verify Overflow 262126 Hz	262126 Hz
15.15	Verify 000000 Hz +/- 000010 Hz	0 Hz
15.17	VR10 Adjustment, 7 V +/- 0.01 V	7.00 V
15.18	VR11 Adjustment, 0.5 V +/- 0.001 V	0.500 V

16.0 ANTI JAM BIT TEST

16.4	Verify 05 displayed	YES
16.7	Verify 07 displayed	YES
16.11	Verify 05 displayed	YES

FILE COPY

956A-201 TEST DATA SHEET Page 3 of 4

17.0 TEST 8: D/A CONVERTER 4-20 mA/0-10 V OUTPUT TEST

17.3 Calibration Verification, Analog Outputs:

4-20 mA OUTPUTS #1 and #2

SCALE	CURRENT	VOLTAGE SPEC.	Output #1	Output #2
Low	4 mA	1 +/- .001 V	1.000 V	1.000 V
Mid	12 mA	3 +/- .010 V	3.009 V	3.009 V
High	20 mA	5 +/- .001 V	5.000 V	5.000 V

0-10 V OUTPUT

SCALE	VOLTAGE SPEC.	VALUE
Low	.0000 V +/- .0001 V	0.000 V
Mid	5.000 V +/- .030 V	5.009 V
High	10.000 V +/- .001 V	10.000 V

18.0 TEST 9: EEPROM TEST

18.7 Write and Verify Pass/Fail

19.0 TEST A: NON-MASKABLE INTERRUPT VERIFICATION (NMI) TEST

19.3 Verify 125 mS +/- 1 mS Pass/Fail

20.0 TEST B: HIGH VOLTAGE POWER SUPPLY TEST

20.4 R5 Adjustment/"P4 HV" 600 V

20.6 "HV TEST" Jack (0.600 +/- 0.010 V) 0.605 V

20.8 R5 Adjustment (400 V to 1800 V) ✓ min ✓ max

20.11 HV Shut Down Pass/Fail

FILE COPY

956A-201 TEST DATA SHEET Page 4 of 4

21.0 TEST C: DATA ENTRY TEST

21.3	DIGIT, VALUE, and ENTER Switches	Pass/Fail
21.5	FUNCTION Switch	Pass/Fail

22.0 TEST D: RELAY TEST

22.4	Relay Response	Pass/Fail

23.0 TEST F: JUMPER CONFIGURATION TEST

23.5	JP3 Jumpers	Pass/Fail

24.0 OPERATION SOFTWARE TEST

24.8	Display Reading, "RANGE" LED HV Reading, "High", "Warn", "Rate" Values, Check Source LED	Pass/Fail

25.0 BURN-IN

25.8	Burn-in Start Date/Time	01-08-2001 / 8AM
25.9	Burn-in Stop Date/Time)	01-15-2001 / 8AM
25.10	Check Source Function	Pass/Fail
25.12	No failures observed during burn-in and Post burn-in tests.	Pass/Fail

Performed By J KOEHLER Date 01/05/2001

Q.A. Review By [signature] Date 1/17/01

FILE COPY

INOVISION RADIATION MEASUREMENTS
TITLE: TEST PROCEDURE FOR THE 956A-201 UNIVERSAL DIGITAL RATEMETER
CUSTOMER P.O. 4500008671
CUSTOMER: RGE VICO S.O./W.O. 157033
DOCUMENT: TP956A-201-3 REV. 4 W.O. 49906

956A-201 TEST DATA SHEET 1, Page 1 of 4

PART NUMBER 956A-201
SERIAL NUMBER 130
DMM Model FLUKE 8600A S/N 06252236 Cal. Due Date 04/04/2001
Scope TEKTRONIX 2245A S/N B022680 Cal. Due Date 09/19/2001
H.V. Probe FLUKE 80K-6 S/N IRM1285 Cal. Due Date 07/20/2001
Frequency Counter FLUKE 1900A S/N 4130013 Cal. Due Date 01/10/2001
Test Software 940942200200 Rev. Level C
Operating Software 94095603 Rev. Level B

5.5 SET-UP

+5VDC ± 0.100VDC	5.007	V
+15VDC ± .75VDC	15.473	V
-15VDC ± .75VDC	-15.221	V

6.0 WRITE CLOCK ADJUSTMENT

6.6 VR13 Adjustment — Pass/Fail

7.0 DISCRIMINATOR ADJUSTMENT

7.2 VR10 Adjustment — Pass/Fail
7.3 VR10 Final Setting 5.00 (5 ± 0.01 V)
7.5 VR11 Adjustment — Pass/Fail
7.6 VR11 Final Setting 0.500 (0.5 ± 0.01 V)

8.0 INPUT AMPLIFIER ADJUSTMENT

8.4 VR9 Adjustment .0000 V +/- .0001 V — 0.000 V
8.10 VR8 Adjustment Unity Gain — Pass/Fail

9.0 ANTI-JAM ADJUSTMENT

9.3 VR12 Adjustment Range — Pass/Fail
9.5 VR12 Adjustment 0.875 V +/- .0001 V — 0.875 V

10.0 TEST 1: RAM TEST

10.4 RAM Locations — Pass/Fail

FILE COPY

956A-201 TEST DATA SHEET Page 2 of 4

11.0 TEST 3: BAR GRAPH TEST

11.3 Bar Graph Segment Sequence and Color — Pass/Fail

12.0 TEST 4: DISPLAY TEST

12.3 Display Characters and Sequence — Pass/Fail

13.0 TEST 5: SWITCH TEST

13.5 Front Panel Switches and REMOTE ACK — Pass/Fail

14.0 TEST 6: INDICATOR/BACKLITE/FAIL TEST

14.3 Indicator/Backlite/Fail LED Operation — Pass/Fail

15.0 TEST 7: COUNTER/DISCRIMINATOR TEST

15.3	Verify 000000 Hz	0 Hz
15.5	Verify 001000 Hz +/- 000010 Hz	1000 Hz
15.7	Verify 000100 Hz +/- 000001 Hz	100 Hz
15.9	Verify 010000 Hz +/- 000100 Hz	10K Hz
15.11	Verify 100000 +/- 001000 Hz	100K Hz
15.13	Verify Overflow 262126 Hz	262126 Hz
15.15	Verify 000000 Hz +/- 000010 Hz	0 Hz
15.17	VR10 Adjustment, 7 V +/- 0.01 V	7.00 V
15.18	VR11 Adjustment, 0.5 V +/- 0.001 V	0.500 V

16.0 ANTI JAM BIT TEST

16.4	Verify 05 displayed	YES
16.7	Verify 07 displayed	YES
16.11	Verify 05 displayed	YES

FILE COPY

956A-201 TEST DATA SHEET Page 3 of 4

17.0 TEST 8: D/A CONVERTER 4-20 mA/0-10 V OUTPUT TEST

17.3 Calibration Verification, Analog Outputs:

4-20 mA OUTPUTS #1 and #2

SCALE	CURRENT	VOLTAGE SPEC.	Output #1	Output #2
Low	4 mA	1 +/- .001 V	1.000 V	1.000 V
Mid	12 mA	3 +/- .010 V	3.009 V	3.009 V
High	20 mA	5 +/- .001 V	5.000 V	5.000 V

0-10 V OUTPUT

SCALE	VOLTAGE SPEC.	VALUE
Low	.0000 V +/- .0001 V	0.000 V
Mid	5.000 V +/- .030 V	5.009 V
High	10.000 V +/- .001 V	10.000 V

18.0 TEST 9: EEPROM TEST

18.7 Write and Verify Pass/Fail

19.0 TEST A: NON-MASKABLE INTERRUPT VERIFICATION (NMI) TEST

19.3 Verify 125 mS +/- 1 mS Pass/Fail

20.0 TEST B: HIGH VOLTAGE POWER SUPPLY TEST

20.4 R5 Adjustment/"P4 HV" 600 V

20.6 "HV TEST" Jack (0.600 +/- 0.010 V) 0.605 V

20.8 R5 Adjustment (400 V to 1800 V) ✓ min ✓ max

20.11 HV Shut Down Pass/Fail

FILE COPY

956A-201 TEST DATA SHEET Page 4 of 4

21.0 TEST C: DATA ENTRY TEST

21.3	DIGIT, VALUE, and ENTER Switches	Pass/Fail
21.5	FUNCTION Switch	Pass/Fail

22.0 TEST D: RELAY TEST

22.4	Relay Response	Pass/Fail

23.0 TEST F: JUMPER CONFIGURATION TEST

23.5	JP3 Jumpers	Pass/Fail

24.0 OPERATION SOFTWARE TEST

24.8	Display Reading, "RANGE" LED HV Reading, "High", "Warn", "Rate" Values, Check Source LED	Pass/Fail

25.0 BURN-IN

25.8	Burn-in Start Date/Time	01-08-2001 / 8AM
25.9	Burn-in Stop Date/Time)	01-15-2001 / 8AM
25.10	Check Source Function	Pass/Fail
25.12	No failures observed during burn-in and Post burn-in tests.	Pass/Fail

Performed By J KOEHLER Date 01/05/2001

Q.A. Review By [illegible] Date 1/17/2001

FILE COPY

INOVISION RADIATION MEASUREMENTS
TITLE: TEST PROCEDURE FOR THE 956A-201 UNIVERSAL DIGITAL RATEMETER
CUSTOMER P.O. 450000 8671
CUSTOMER: RGE VICO S.O./W.O. 157033
DOCUMENT: TP956A-201-3 REV. 4 W.O. 49906

956A-201 TEST DATA SHEET 1, Page 1 of 4

PART NUMBER 956A-201
SERIAL NUMBER 183
DMM Model FLUKE 8600A S/N 06252236 Cal. Due Date 04/04/2001
Scope TEKTRONIX 2245A S/N B022680 Cal. Due Date 09/19/2001
H.V. Probe FLUKE 80K-6 S/N IRM1285 Cal. Due Date 07/20/2001
Frequency Counter FLUKE 1900A S/N 4130013 Cal. Due Date 01/10/2001
Test Software 940942200200 Rev. Level C
Operating Software 94095603 Rev. Level B

5.5 SET-UP

+5VDC ± 0.100VDC	5.00	V
+15VDC ± .75VDC	15.630	V
-15VDC ± .75VDC	-15.130	V

6.0 WRITE CLOCK ADJUSTMENT

6.6 VR13 Adjustment — Pass/Fail

7.0 DISCRIMINATOR ADJUSTMENT

7.2 VR10 Adjustment — Pass/Fail
7.3 VR10 Final Setting 5.00 (5 ± 0.01 V)
7.5 VR11 Adjustment — Pass/Fail
7.6 VR11 Final Setting 0.500 (0.5 ± 0.01 V)

8.0 INPUT AMPLIFIER ADJUSTMENT

8.4 VR9 Adjustment .0000 V +/- .0001 V — 0.000 V
8.10 VR8 Adjustment Unity Gain — Pass/Fail

9.0 ANTI-JAM ADJUSTMENT

9.3 VR12 Adjustment Range — Pass/Fail
9.5 VR12 Adjustment 0.875 V +/- .0001 V — 0.875 V

10.0 TEST 1: RAM TEST

10.4 RAM Locations — Pass/Fail

FILE COPY

956A-201 TEST DATA SHEET Page 2 of 4

11.0 TEST 3: BAR GRAPH TEST

11.3	Bar Graph Segment Sequence and Color	Pass/Fail

12.0 TEST 4: DISPLAY TEST

12.3	Display Characters and Sequence	Pass/Fail

13.0 TEST 5: SWITCH TEST

13.5	Front Panel Switches and REMOTE ACK.	Pass/Fail

14.0 TEST 6: INDICATOR/BACKLITE/FAIL TEST

14.3	Indicator/Backlite/Fail LED Operation	Pass/Fail

15.0 TEST 7: COUNTER/DISCRIMINATOR TEST

15.3	Verify 000000 Hz	0	Hz
15.5	Verify 001000 Hz +/- 000010 Hz	1000	Hz
15.7	Verify 000100 Hz +/- 000001 Hz	100	Hz
15.9	Verify 010000 Hz +/- 000100 Hz	10K	Hz
15.11	Verify 100000 +/- 001000 Hz	100K	Hz
15.13	Verify Overflow 262126 Hz	262126	Hz
15.15	Verify 000000 Hz +/- 000010 Hz	0	Hz
15.17	VR10 Adjustment, 7 V +/- 0.01 V	7.00	V
15.18	VR11 Adjustment, 0.5 V +/- 0.001 V	0.500	V

16.0 ANTI JAM BIT TEST

16.4	Verify 05 displayed	YES
16.7	Verify 07 displayed	YES
16.11	Verify 05 displayed	YES

FILE COPY

956A-201 TEST DATA SHEET Page 3 of 4

17.0 TEST 8: D/A CONVERTER 4-20 mA/0-10 V OUTPUT TEST

17.3 Calibration Verification, Analog Outputs:

4-20 mA OUTPUTS #1 and #2

SCALE	CURRENT	VOLTAGE SPEC.	Output #1	Output #2
Low	4 mA	1 +/- .001 V	1.000 V	1.000 V
Mid	12 mA	3 +/- .010 V	3.009 V	3.009 V
High	20 mA	5 +/- .001 V	5.000 V	5.000 V

0-10 V OUTPUT

SCALE	VOLTAGE SPEC.	VALUE
Low	.0000 V +/- .0001 V	0.000 V
Mid	5.000 V +/- .030 V	5.009 V
High	10.000 V +/- .001 V	10.000 V

18.0 TEST 9: EEPROM TEST

18.7 Write and Verify Pass/Fail

19.0 TEST A: NON-MASKABLE INTERRUPT VERIFICATION (NMI) TEST

19.3 Verify 125 mS +/- 1 mS Pass/Fail

20.0 TEST B: HIGH VOLTAGE POWER SUPPLY TEST

20.4 R5 Adjustment/"P4 HV" 1600 V

20.6 "HV TEST" Jack (0.600 +/- 0.010 V) 0.605 V

20.8 R5 Adjustment (400 V to 1800 V) ✓ min ✓ max

20.11 HV Shut Down Pass/Fail

FILE COPY

956A-201 TEST DATA SHEET Page 4 of 4

21.0 TEST C: DATA ENTRY TEST

21.3	DIGIT, VALUE, and ENTER Switches	Pass/Fail
21.5	FUNCTION Switch	Pass/Fail

22.0 TEST D: RELAY TEST

22.4	Relay Response	Pass/Fail

23.0 TEST F: JUMPER CONFIGURATION TEST

23.5	JP3 Jumpers	Pass/Fail

24.0 OPERATION SOFTWARE TEST

24.8	Display Reading, "RANGE" LED HV Reading, "High", "Warn", "Rate" Values, Check Source LED	Pass/Fail

25.0 BURN-IN

25.8	Burn-in Start Date/Time	01-08-2001 / 8AM
25.9	Burn-in Stop Date/Time)	01-15-2001 / 8AM
25.10	Check Source Function	Pass/Fail
25.12	No failures observed during burn-in and Post burn-in tests.	Pass/Fail

Performed By J KOEHLER Date 01/05/2001

Q.A. Review By [signature] Date 1/17/01

FILE COPY

VICTOREEN, INC.

TITLE: ELECTRONIC TEST PROCEDURE FOR 897A-2X0 AND 897A-2X1 DETECTORS

CUSTOMER: N/A

DOCUMENT: TP897A REV. A

Test Data Sheet
TP897A for 897A-2X0 and 897-2X1 Detectors

Customer: RGE P.O. No.: 450000 8671

S.O. No.: 157033 W.O. No.: 49903

Model 897A- 210 Serial No.: 131

897A-210-10

Circuit Board Serial No.: 131 Revision Level: 1

Test Equipment

Oscilloscope Model No: 465B S/N: B022167 Cal Due Date: 10-16-99

Digital Voltmeter Model: 8050A S/N: 4860021 Cal Due Date: 4-5-99

Test Results

6.2.3	Detector Quiescent Current Draw	18.9	mA (100 mA max.)
6.3.1	Jumper Placement J1 A-B (A-B), J2 A-B (A-B), J3 A-B (A-B)		
6.3.3	Local Zener Regulation	9.92	v (>9.5 and < 11.0 volts)
6.4.3	Anti-jam minimum setting	0.38m	v (< 0.100 volts).
6.4.4	Anti-jam maximum setting	3.129	v (> 2.9 volts)
6.4.5	Anti-jam final setting	1.000	v (1 +/- 0.001 volts)
6.5.1	Discriminator minimum setting	0.058	v (< 0.100 volts)
6.5.2	Discriminator maximum setting	1.96	v (> 1.5 volts)
6.5.3	Discriminator final setting	0.500	v (0.5 +/0 0.01 volts)
6.6.4	Anti-jam trigger threshold	1.006	v (1 +/- 0.01 volts)
6.7.1	Detector output pulse height	4.8	v peak (4.5 minimum)
	Output square wave period	23	uS (25 uS maximum)
6.8.4	Detector background CPM	8	(> 1CPM / < 25 CPM)

6.8.5 Check source activation:

GM Tube up YES (yes) 12 o'clock YES (yes) 6 o'clock YES (yes)

GM Tube down YES (yes) 3 o'clock YES (yes) 9 o'clock YES (yes)

Performed By: Richard Howell Date: 2/11/99

Q.A. Review By: [illegible] Date: 2/18/99

PRODUCTI
PRINT
FEB 10 19

VICTOREEN, INC.
TITLE: ELECTRONIC TEST PROCEDURE FOR 897A-2X0 AND 897A-2X1 DETECTORS
CUSTOMER: N/A
DOCUMENT: TP897A REV. A

Test Data Sheet
TP897A for 897A-2X0 and 897-2X1 Detectors

Customer: RGE P.O. No.: 450000 8671
S.O. No.: 157033 W.O. No.: 49903
Model 897A- 210 Serial No.: 132

897A-210-10
Circuit Board Serial No.: 130 Revision Level: 1

Test Equipment
Oscilloscope Model No: 465B S/N: B022167 Cal Due Date: 10-16-99
Digital Voltmeter Model: 8050A S/N: 4860021 Cal Due Date: 4-5-99

Test Results

6.2.3	Detector Quiescent Current Draw	99.5	mA (100 mA max.)
6.3.1	Jumper Placement J1 A-B (A-B), J2 A-B (A-B), J3 A-B (A-B)		
6.3.3	Local Zener Regulation	10.44	v (>9.5 and < 11.0 volts)
6.4.3	Anti-jam minimum setting	0.002	v (< 0.100 volts).
6.4.4	Anti-jam maximum setting	3.088	v (> 2.9 volts)
6.4.5	Anti-jam final setting	1.000	v (1 +/- 0.001 volts)
6.5.1	Discriminator minimum setting	0.057	v (< 0.100 volts)
6.5.2	Discriminator maximum setting	1.949	v (> 1.5 volts)
6.5.3	Discriminator final setting	0.500	v (0.5 +/0 0.01 volts)
6.6.4	Anti-jam trigger threshold	1.003	v (1 +/- 0.01 volts)
6.7.1	Detector output pulse height	4.8	v peak (4.5 minimum)
	Output square wave period	23	uS (25 uS maximum)
6.8.4	Detector background CPM	9	(> 1CPM / < 25 CPM)

6.8.5 Check source activation:

GM Tube up YES (yes) 12 o'clock YES (yes) 6 o'clock YES (yes)

GM Tube down YES (yes) 3 o'clock YES (yes) 9 o'clock YES (yes)

Performed By: Richard Hewitt Date: 2/11/99

Q.A. Review By: [signature] Date: 4/18/99

PRODUCTION PRINT
FEB 10 19

VICTOREEN, INC.

TITLE: ELECTRONIC TEST PROCEDURE FOR 897A-2X0 AND 897A-2X1 DETECTORS

CUSTOMER: N/A

DOCUMENT: TP897A REV. A

Test Data Sheet
TP897A for 897A-2X0 and 897-2X1 Detectors

Customer: RGE P.O. No.: 4500008671

S.O. No.: 157033 W.O. No.: 52939

Model 897A- 210 Serial No.: 100762

897A-210-10

Circuit Board Serial No.: 95708 Revision Level: 2

Test Equipment

Oscilloscope Model No: TEKTRONIX 2245A S/N: IRM0217 Cal Due Date: 4-17-2001

Digital Voltmeter Model: FLUKE 8600A S/N: 0625236 Cal Due Date: 4-4-2001

Test Results

6.2.3	Detector Quiescent Current Draw	100	mA (100 mA max.)
6.3.1	Jumper Placement J1 ✓ (A-B), J2 ✓ (A-B), J3 ✓ (A-B)		
6.3.3	Local Zener Regulation	10.430	v (>9.5 and < 11.0 volts)
6.4.3	Anti-jam minimum setting	0.000	v (< 0.100 volts).
6.4.4	Anti-jam maximum setting	3.105	v (> 2.9 volts)
6.4.5	Anti-jam final setting	1.000	v (1 +/- 0.001 volts)
6.5.1	Discriminator minimum setting	0.008	v (< 0.100 volts)
6.5.2	Discriminator maximum setting	2.001	v (> 1.5 volts)
6.5.3	Discriminator final setting	0.500	v (0.5 +/0 0.01 volts)
6.6.4	Anti-jam trigger threshold	1.001	v (1 +/- 0.01 volts)
6.7.1	Detector output pulse height	4.60	v peak (4.5 minimum)
	Output square wave period	12	uS (25 uS maximum)
6.8.4	Detector background CPM	6 CPM	(> 1CPM / < 25 CPM)

6.8.5 Check source activation:

GM Tube up YES (yes) 12 o'clock YES (yes) 6 o'clock YES (yes)

GM Tube down YES (yes) 3 o'clock YES (yes) 9 o'clock YES (yes)

Performed By: J Koehler Date: 10-27-2000

Q.A. Review By: C. Walls Date: 10-30-00

tp/d#48/TP897A.doc

FILE COPY

Attachment

TEST DATA SHEET: LT956A/897A-21X

Customer ROCHESTER GAS & ELECTRIC Customer P.O.No.: 4500009671

S.O. No.: 157033 IRM W.O. No.: 534216

6.2

956A Series Model No. 956A-201-M1 Serial No. 104643

897A-21X Series Model No. 897A-210 Serial No. 131

958 Series Remote Alarm Model No. N/A Serial No. N/A

848-8A Serial No. 101364 CLOSED position current dose rate 8.42 mR/h

MID Position current dose rate 43.5 mR/h

OPEN Position current dose rate 273 mR/h

848-8 100 mCi Calibrator Serial No. 225

6.3

Test Equipment	Model	Serial No	Cal. Date	Cal Due Date
Digital Multimeter	FLUKE 8050A	IRM-0368	6-1-00	6-1-01
High Voltage Probe	FLUKE 80K-6	IRM-0542	4-6-01	4-6-02

6.4 H.V. 575 V (575 ± 5 VDC) Low Disc 0.5000 V (0.5 ± 0.05 VDC) High Disc. 7.011 V (7 ± 0.1 VDC)

956A Jumper J7 REMOVED (Removed)

6.7

Switch Position	Parameter	Value
0	High Alarm	1.00E2 (1.00E2 mR/h)
1	Warn Alarm	2.00E1 (2.00E1 mR/h)
2	Tau/Dead Time	1.43E-6 (Obtain from Detector CAL-GM6 Data)
3	Analog Full Scale	1.00E3 (1.00E3 mR/h)
4	Overange	1.00E3 (1.00E3 mR/h)
5	Conversion Constant	3.98E-3 (Obtain from Detector CAL-GM6 Data)
7	Analog Low Scale	1.00E-2 (1.00E-2 mR/h)
9	Underrange	1.00E-2 (1.00E-2 mR/h)

ENGINEERING		DATE 3-8-01
MANUFACTURING		DATE 3-12-01
QUALITY ASSURANCE		DATE 3/17/01
RADIATION SAFETY OFFICER	N/A	DATE N/A

Inovision Radiation Measurements		DATE 3/6/01		TITLE Loop Test Procedure for 955A Low Range GM Area Monitors	
REV 1	ECO NO. 1882	RELEASED FOR PRODUCTION	DOC CTRL	SHEET 1 of 2	NO. LT956A/897A-21X	SIZE TP

955A-201-M1 SN 104643
897A-210 SN 131

Attachment
TEST DATA SHEET: LT956A/897A-21X

Table 1

	Closed 848-8A	Mid 848-8A	Open 848-8A	Closed Unack.	Closed Ack.	Signal Disconn.	Signal Reconn.	Channel Overrange	Overrange Recovery
UDR mR/h	8.36	44.6	240	8.34	9.43	0.00	8.50	EEEEE / EEEEE	8.47
Remote mR/h	N/A	N/A	N/A	N/A	N/A	N/A	N/A	N/A / Full Scale	N/A
Analog Output 1	3.324	3.936	4.518	3.324	3.324	0.996	3.324	FS/5.005 / Full Scale	3.324
Analog Output 2	3.321	3.932	4.512	3.321	3.321	0.998	3.321	FS/4.997 / Full Scale	3.321
Analog 0-10 V	5.803	7.331	8.781	5.803	5.803	0.002	5.803	FS/9.995 / Full Scale	5.803
Analog Option	N/A	N/A	N/A	N/A	N/A	N/A	N/A	N/A / Full Scale	N/A
Warn Indicator	OFF / Off	FLASHING / Flashing	FLASHING / Flashing	FLASHING / Flashing	OFF / Off	OFF / Off	OFF / Off	FLASHING / Flashing	OFF / Off
Warn Relay	NO / NO	NC / NC	NC / NC	NC / NC	NO / NO	NO / NO	NO / NO	NC / NC	NO / NO
Alarm Indicator	OFF / Off	OFF / Off	FLASHING / Flashing	FLASHING / Flashing	OFF / Off	OFF / Off	OFF / Off	FLASHING / Flashing	OFF / Off
Alarm Relay	NO / NO	NO / NO	NC / NC	NC / NC	NO / NO	NO / NO	NO / NO	NC / NC	NO / NO
Aux. Relay	NO / NO*	NO / NO*	NC / NC*	NC / NC*	NO / NO*	NO / NO*	NO / NO*	NC / NC*	NO / NO*
Range Indicator	OFF / Off	OFF / Off	OFF / Off	OFF / Off	OFF / Off	ON / On	OFF / Off	ON / On	OFF / Off
Fail Indicator	OFF / Off	OFF / Off	OFF / Off	OFF / Off	OFF / Off	ON / On	OFF / Off	OFF / Off	OFF / Off
Fail Relay	NO / NO	NO / NO	NO / NO	NO / NO	NO / NO	NC / NC	NO / NO	NO / NO	NO / NO
Bargraph	GREEN / Green	AMBER / Amber	RED / Red	RED / Red	GREEN / Green	OFF / OFF	GREEN / Green	ALL RED / ALL Red	GREEN / Green
Remote Lamp	N/A / Off	N/A / Off	N/A / On	N/A / On	N/A / Off	N/A / Off	N/A / Off	N/A / On	N/A / Off
Remote Sonalert	N/A / Off	N/A / Off	N/A / On	N/A / On	N/A / Off	N/A / Off	N/A / Off	N/A / On	N/A / Off

NO = Normally Open Lamp Illuminated, NC= Normally Closed Lamp Illuminated , * Aux. Relay is "RATE" on Test Fixture.

Performed by _____ Date 5-2-01

Q.A. Review by _____ Date 5/3/01

Inovision Radiation Measurements			DATE 3/6/01		TITLE Loop Test Procedure for 955A Low Range GM Area Monitors	
REV 1	ECO NO. 1882	RELEASED FOR PRODUCTION	DOC CTRL	SHEET 2 of 2	NO. LT956A/897A-21X	SIZE TP

Attachment

TEST DATA SHEET: LT956A/897A-21X

Customer ROCHESTER GAS & ELECTRIC Customer P.O.No.: 4500009671

S.O. No.: 157033 IRM W.O. No.: 534216

6.2

956A Series Model No. 956A-201-M1 Serial No. 104645

897A-21X Series Model No. 897A-210 Serial No. 100762

958 Series Remote Alarm Model No. N/A Serial No. N/A

848-8A Serial No. 101364 CLOSED position current dose rate 8.42 mR/h

MID Position current dose rate 43.5 mR/h

OPEN Position current dose rate 273 mR/h

848-8 100 mCi Calibrator Serial No. 225

6.3

Test Equipment	Model	Serial No.	Cal. Date	Cal. Due Date
Digital Multimeter	FLUKE 9050A	IRM-0368	6-1-00	6-1-01
High Voltage Probe	FLUKE 80K-6	IRM-0542	4-6-01	4-6-02

6.4 H.V. 576 V (575 ± 5 VDC) Low Disc. 0.501 V(0.5 ± 0.05 VDC) High Disc. 7.007 V(7 ± 0.1 VDC)

956A Jumper J7 REMOVED (Removed)

6.7

Switch Position	Parameter	Value	
0	High Alarm	1.00E2	(1.00E2 mR/h)
1	Warn Alarm	2.00E1	(2 00E1 mR/h)
2	Tau/Dead Time	1.38E-6	(Obtain from Detector CAL-GM6 Data)
3	Analog Full Scale	1.00E3	(1.00E3 mR/h)
4	Overange	1.00E3	(1.00E3 mR/h)
5	Conversion Constant	3.87E-3	(Obtain from Detector CAL-GM6 Data)
7	Analog Low Scale	1.00E-2	(1.00E-2 mR/h)
9	Underrange	1.00E-2	(1.00E-2 mR/h)

ENGINEERING		DATE 3-8-01
MANUFACTURING		DATE 3-12-01
QUALITY ASSURANCE		DATE 3/12/01
RADIATION SAFETY OFFICER	N/A	DATE N/A

Inovision Radiation Measurements			DATE 3/6/01		TITLE Loop Test Procedure for 955A Low Range GM Area Monitors	
REV 1	ECO NO. 1882	RELEASED FOR PRODUCTION	DOC CTRL	SHEET 1 of 2	NO. LT956A/897A-21X	SIZE TP

955A-201-M1 SN 104645
897A-210 SN 100762

Attachment
TEST DATA SHEET: LT956A/897A-21X

Table 1

	Closed 848-8A	Mid 848-8A	Open 848-8A	Closed Unack.	Closed Ack.	Signal Disconn.	Signal Reconn.	Channel Overrange	Overrange Recovery
UDR mR/h	8.67	44.4	254	8.52	8.58	0.00	8.61	EEEEE / EEEEE	8.50
Remote mR/h	N/A	N/A	N/A	N/A	N/A	N/A	N/A	N/A / Full Scale	N/A
Analog Output 1	3.328	3.908	4.519	3.327	3.327	0.998	3.327	FS/~~9~~ 5.005 / Full Scale	3.327
Analog Output 2	3.322	3.902	4.511	3.322	3.322	0.998	3.322	FS/4.996 / Full Scale	3.321
Analog 0-10 V	5.808	7.257	8.783	5.808	5.808	0.002	5.808	FS/9.997 / Full Scale	5.808
Analog Option	N/A	N/A	N/A	N/A	N/A	N/A	N/A	N/A / Full Scale	N/A
Warn Indicator	OFF / Off	FLASHING / Flashing	FLASHING / Flashing	FLASHING / Flashing	OFF / Off	OFF / Off	OFF / Off	FLASHING / Flashing	OFF / Off
Warn Relay	NO / NO	NC / NC	NC / NC	NC / NC	NO / NO	NO / NO	NO / NO	NC / NC	NO / NO
Alarm Indicator	OFF / Off	OFF / Off	FLASHING / Flashing	FLASHING / Flashing	OFF / Off	OFF / Off	OFF / Off	FLASHING / Flashing	OFF / Off
Alarm Relay	NO / NO	NO / NO	NC / NC	NC / NC	NO / NO	NO / NO	NO / NO	NC / NC	NO / NO
Aux. Relay	NO / NO*	NO / NO*	NC / NC*	NC / NC*	NO / NO*	NO / NO*	NO / NO*	NC / NC*	NO / NO*
Range Indicator	OFF / Off	OFF / Off	OFF / Off	OFF / Off	OFF / Off	ON / On	OFF / Off	ON / On	OFF / Off
Fail Indicator	OFF / Off	OFF / Off	OFF / Off	OFF / Off	OFF / Off	ON / On	OFF / Off	OFF / Off	OFF / Off
Fail Relay	NO / NO	NO / NO	NO / NO	NO / NO	NO / NO	NC / NC	NO / NO	NO / NO	NO / NO
Bargraph	GREEN / Green	AMBER / Amber	RED / Red	RED / Red	GREEN / Green	OFF / OFF	GREEN / Green	ALL RED / ALL Red	GREEN / Green
Remote Lamp	N/A / Off	N/A / Off	N/A / On	N/A / On	N/A / Off	N/A / Off	N/A / Off	N/A / On	N/A / Off
Remote Sonalert	N/A / Off	N/A / Off	N/A / On	N/A / On	N/A / Off	N/A / Off	N/A / Off	N/A / On	N/A / Off

NO = Normally Open Lamp Illuminated, NC= Normally Closed Lamp Illuminated , * Aux. Relay is "RATE" on Test Fixture.

Performed by _____ Date 5/2/01

Q.A. Review by _____ Date 5/3/01

Inovision Radiation Measurements			DATE 3/6/01		TITLE Loop Test Procedure for 955A Low Range GM Area Monitors	
REV 1	ECO NO. 1882	RELEASED FOR PRODUCTION	DOC CTRL	SHEET 2 of 2	NO. LT956A/897A-21X	SIZE TP

Attachment

TEST DATA SHEET: LT956A/897A-21X

Customer ROCHESTER GAS & ELECTRIC Customer P.O.No.: 4500009671

S.O. No.: 157033 IRM W.O. No.: 534216

6.2

956A Series Model No 956A-201-M1 Serial No. 104644

897A-21X Series Model No. 897A-210 Serial No. 132

958 Series Remote Alarm Model No. N/A Serial No. N/A

848-8A Serial No. 101364 CLOSED position current dose rate 8.42 mR/h

MID Position current dose rate 43.5 mR/h

OPEN Position current dose rate 273 mR/h

848-8 100 mCi Calibrator Serial No. 225

6.3

Test Equipment	Model	Serial No.	Cal. Date	Cal. Due Date
Digital Multimeter	FLUKE 8050A	IRM-0368	6-1-00	6-1-01
High Voltage Probe	FLUKE 80K-6	IRM-0542	4-6-01	4-6-02

6.4 H.V. 575 V (575 ± 5 VDC) Low Disc. 0.5006 V(0.5 ± 0.05 VDC) High Disc. 7.002 V(7 ± 0.1 VDC)

956A Jumper J7 REMOVED (Removed)

6.7

Switch Position	Parameter	Value
0	High Alarm	1.00E2 (1.00E2 mR/h)
1	Warn Alarm	2.00E1 (2.00E1 mR/h)
2	Tau/Dead Time	1.26E-6 (Obtain from Detector CAL-GM6 Data)
3	Analog Full Scale	1.00E3 (1.00E3 mR/h)
4	Overange	1.00E3 (1.00E3 mR/h)
5	Conversion Constant	3.67E-3 (Obtain from Detector CAL-GM6 Data)
7	Analog Low Scale	1.00E-2 (1.00E-2 mR/h)
9	Underrange	1.00E-2 (1.00E-2 mR/h)

ENGINEERING		DATE 3-8-01
MANUFACTURING		DATE 3-12-01
QUALITY ASSURANCE		DATE 3/12/01
RADIATION SAFETY OFFICER	N/A	DATE N/A

Inovision Radiation Measurements			DATE 3/6/01		TITLE Loop Test Procedure for 955A Low Range GM Area Monitors	
REV 1	ECO NO. 1882	RELEASED FOR PRODUCTION	DOC CTRL	SHEET 1 of 2	NO. LT956A/897A-21X	SIZE TP

955A-201-M1 SN 104644
897A-210 SN 132

Attachment
TEST DATA SHEET: LT956A/897A-21X

Table 1

	Closed 848-8A	Mid 848-8A	Open 848-8A	Closed Unack.	Closed Ack.	Signal Disconn.	Signal Reconn.	Channel Overrange	Overrange Recovery
UDR mR/h	8.54	44.3	259	8.60	8.75	0.00	8.73	EEEEE / EEEEE	8.56
Remote mR/h	N/A	N/A	N/A	N/A	N/A	N/A	N/A	N/A / Full Scale	N/A
Analog Output 1	3.326	3.903	4.521	3.321	3.327	0.999	3.327	FS/5.007 / Full Scale	3.327
Analog Output 2	3.320	3.901	4.512	3.321	3.320	0.996	3.320	FS/4.998 / Full Scale	3.320
Analog 0-10 V	5.802	7.253	8.781	5.803	5.803	0.002	5.803	FS/9.996 / Full Scale	5.803
Analog Option	N/A	N/A	N/A	N/A	N/A	N/A	N/A	N/A / Full Scale	N/A
Warn Indicator	OFF / Off	FLASHING / Flashing	FLASHING / Flashing	FLASHING / Flashing	OFF / Off	OFF / Off	OFF / Off	FLASHING / Flashing	OFF / Off
Warn Relay	NO / NO	NC / NC	NC / NC	NC / NC	NO / NO	NO / NO	NO / NO	NC / NC	NO / NO
Alarm Indicator	OFF / Off	OFF / Off	FLASHING / Flashing	FLASHING / Flashing	OFF / Off	OFF / Off	OFF / Off	FLASHING / Flashing	OFF / Off
Alarm Relay	NO / NO	NO / NO	NC / NC	NC / NC	NO / NO	NO / NO	NO / NO	NC / NC	NO / NO
Aux. Relay	NO / NO*	NO / NO*	NC / NC*	NC / NC*	NO / NO*	NO / NO*	NO / NO*	NC / NC*	NO / NO*
Range Indicator	OFF / Off	OFF / Off	OFF / Off	OFF / Off	OFF / Off	ON / On	OFF / Off	ON / On	OFF / Off
Fail Indicator	OFF / Off	OFF / Off	OFF / Off	OFF / Off	OFF / Off	ON / On	OFF / Off	OFF / Off	OFF / Off
Fail Relay	NO / NO	NO / NO	NO / NO	NO / NO	NO / NO	NC / NC	NO / NO	NO / NO	NO / NO
Bargraph	GREEN / Green	AMBER / Amber	RED / Red	RED / Red	GREEN / Green	OFF / OFF	GREEN / Green	ALL RED / ALL Red	GREEN / Green
Remote Lamp	N/A / Off	N/A / Off	N/A / On	N/A / On	N/A / Off	N/A / Off	N/A / Off	N/A / On	N/A / Off
Remote Sonalert	N/A / Off	N/A / Off	N/A / On	N/A / On	N/A / Off	N/A / Off	N/A / Off	N/A / On	N/A / Off

NO = Normally Open Lamp Illuminated, NC= Normally Closed Lamp Illuminated , * Aux. Relay is "RATE" on Test Fixture.

Performed by _____ Date 5-2-01

Q.A. Review by _____ Date 5/2/01

Inovision Radiation Measurements			DATE 3/6/01		TITLE Loop Test Procedure for 955A Low Range GM Area Monitors	
REV 1	ECO NO. 1882	RELEASED FOR PRODUCTION	DOC CTRL	SHEET 2 of 2	NO. LT956A/897A-21X	SIZE TP

Attachment

TEST DATA SHEET: TPS157033A2 Filter/Surge Suppressor Assembly

Customer R.G.&E. / GINNA STATION Customer P.O No.: 4500008671-4

S.O. No.: 157033 IRM W.O No 53428

6.2

S157033A2 Serial No 104899

#1 960SS-200 PCB Serial No 102335 Rev. Level 2

#2 960SS-200 PCB Serial No 102336 Rev. Level 2

Test Equipment	Model	Serial No	Cal Date	Cal. Due Date
Digital Multimeter	FLUKE 8024A	IRM-0368	6-1-00	6-1-01
Oscilloscope	TEKTRONIX 468	IRM-0150	5-18-00	5-18-01

		Train "A"	Train "B"
6.5	Isolated AC Supply Output	119.9 (120 ± 2 VAC)	120.07 (120 ± 2 VAC)
6.8	Noise Output Pulse Height	> 8 v (6 volts p-p min.)	> 8 v (6 volts p-p min)
6.9	Filter Output Pulse Height	3.1 v (3 ± 0.3 volts)	3.1 v (3 ± 0 3 volts)
6.10	Filter Output Noise	< 0.1 v (0.1 volt max.)	< 0.1 (0 1 volt max)

Performed by [signature] Date 3-30-01

Q. A. Review by [signature] Date 4/13/01

ENGINEERING	[signature]	DATE 2-26-01
MANUFACTURING	[signature]	DATE 2-26-01
QUALITY ASSURANCE	[signature]	DATE 2/26/01
RADIATION SAFETY OFFICER	N/A	DATE N/A

Inovision Radiation Measurements			DATE 2/21/01		TITLE Test Procedure for S157033A2 Filter/Surge Suppressor Assembly	
REV 1	ECO NO. 1740	RELEASED FOR PRODUCTION	DOC CTRL [signature]	SHEET 1 of 1	NO TPS157033A2	SIZE TP

TEST PROCEDURE FOR
S157033A2 FILTER/SURGE SUPPRESSOR ASSEMBLY

REV. LEVEL	ECO #	DESCRIPTION/PAGES AFFECTED
1	1740	Initial release

ENGINEERING		DATE 2/26/01
MANUFACTURING		DATE 2/26/01
QUALITY ASSURANCE		DATE 2/26/01
RADIATION SAFETY OFFICER	N/A	DATE N/A

Inovision Radiation Measurements			DATE 2/21/01		TITLE Test Procedure for S157033A2 Filter/Surge Suppressor Assembly	
REV 1	ECO NO. 1740	RELEASED FOR PRODUCTION	DOC CTRL	SHEET 1 of 5	NO. TPS157033A2	SIZE TP

1 PURPOSE

1.1 The purpose of this procedure is to test and document the operation of the S157033A2 Filter/Surge Suppressor assembly.

2 SCOPE

2.1 This procedure is to be performed on all S157033A2 Filter/Surge Suppressors prior to shipment. Filtering efficiency of both the Train "A" and Train "B" sections of the Filter/Surge Suppressor will be verified using a brood band noise source. Testing of the 960SS-200-10 assemblies is not within the scope of this procedure. 960SS-200-10 functional testing is performed at the board level and is a prerequisite to the performance of this procedure.

3 RESPONSIBILITIES

3.1 Personnel performing this procedure shall have a Technicians Skill Level 1 per QSP-18-01.

3.2 Data generated by this test must be reviewed and approved by Q.A. prior to shipment. In addition, Q.A. has the responsibility of maintaining individual detector test data in a job file.

3.3 The completed data sheet from this procedure shall accompany the detector to the calibration lab.

4 ENVIRONMENTAL CONDITIONS

4.1 Environmental conditions shall be the prevailing laboratory ambient.

5 REQUIRED EQUIPMENT / PREREQUISITES

5.1 Digital Multimeter (DMM): Fluke 8050A or equivalent – must be a calibrated device.

5.2 AC line adapter for DMM

5.3 Storage Oscilloscope: Tektronix 468 or equivalent – must be a calibrated device.

5.4 X10 oscilloscope probes – 2 are required.

5.5 Variable **Isolated** AC Power Supply: Heathkit IP-5220 or equivalent.

5.6 92-9015-A Line Filter Test Fixture

5.7 3 wire AC line input adapter and 2 wire AC output adapter.

5.8 Competed and signed test data sheets for 960SS-200-10 PCB assemblies.

6 PROCEDURE

6.1 Record the Customer, Customer P.O. number, S.O. number and W.O. number on the data sheet.

6.2 Record the serial number of the S157033A2 assembly to be tested on the data sheet. In addition, record the serial number and revision level of both installed 960SS-200-10 PCB assemblies on the data sheet.

6.3 Record the model, serial number, calibration date and calibration due date of the digital multimeter (DMM) and Oscilloscope on the data sheet.

6.4 Connect the S157033A2 to be tested to the 92-9015-A Line Filter Test Fixture and the Test Fixture to the **ISOLATED** AC Supply as shown in Figure 1A. The adapters described in 5.7 must be arranged as shown in the Figure to minimize the possibility of stray noise pick-up. Take care that leads are not in contact with the power resistor in the "LOAD" side of the test fixture as the heat generated by the resistor may damage insulation. This is the Train A side of the Filter/Surge Suppressor assembly.

6.5 Turn on the Isolated Adjustable AC Supply and adjust the supply output to 120 ± 2 VAC on the monitor DMM. Record the final value on the Data Sheet.

6.6 Turn on the 92-9015-A Test Fixture AC power. Place the Oscilloscope in the non-store mode and configure as follows:

5 mS/division sweep rate

1 volt/division for both ch. 1 and ch. 2

DC coupling for both ch. 1 and ch. 2

Mode: Both/Alternate

Trigger: ch. 2

6.7 Adjust the oscilloscope trigger until a stable sine wave of approximately 3 volts peak to peak (p-p) appears on the channel 2 display. A complex waveform should appear on channel 1.

6.8 Change the MODE to channel 1 (from both) and verify a complex waveform with transients exceeding 6 volts p-p superimposed on a nominal 3-volt p-p sine wave. The ENVELOPE mode of the oscilloscope may be used to assist in determining transient pulse height. Record verification of a 6-volt p-p minimum transient pulse height on the Data Sheet.

6.9 Change the MODE to channel 2 and the vertical gain to 0.5 volts/division. Record the peak-to peak value of the sine wave developed across the Test Fixture load resistor. The sine wave p-p value must be a of 3 ± 0.3 volts p-p. If the p-p voltage is not within tolerance, repeat Step 6.5 to verify that the line voltage has not move out of tolerance since the initial adjustment was made.

6.10 With the oscilloscope settings remaining the same as in Step 6.10, place the oscilloscope in "STORE" mode and acquire a "snap-shot" of the waveform. Inspect the stored waveform and verify that NO measurable noise is present on the sine wave. For the purpose of this test, no measurable noise is defined as being less than one minor division or 0.1 volts at the current vertical gain setting of 0.5 volts/division (major). Record verification on the Data Sheet.

6.11 Turn off AC power to the Adjustable DC Supply and the 92-9015-A Test Fixture. Remove connections to the Filter/Surge Suppressor assembly Train "A" side and connect to Train "B" as shown in Figure 1B. Repeat Steps 6.5 thorough 6.10 and record the results on the Data Sheet.

6.12 Filter/Surge Suppressor assemblies that have failed this procedure are to be dispositioned by completing a Non-Conformance Report (NCR) per QSP-13-04. Attach data indicating the failure to the NCR.

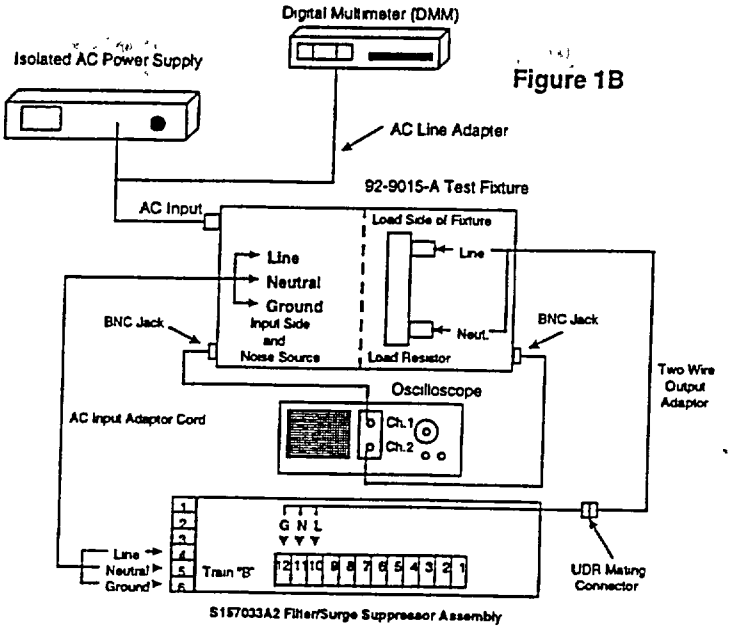

Figure 1B

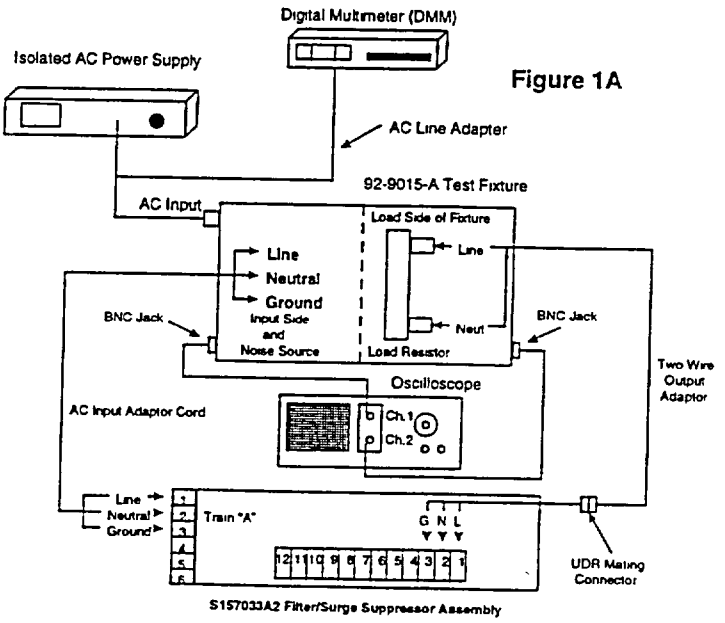

Figure 1A

Inovision Radiation Measurements			DATE 2/21/01		TITLE Test Procedure for S157033A2 Filter/Surge Suppressor Assembly	
REV 1	ECO NO. 1740	RELEASED FOR PRODUCTION	DOC CTRL	SHEET 5 of 5	NO TP157033A2	SIZE TP

Attachment

TEST DATA SHEET: TPS157033A2 Filter/Surge Suppressor Assembly

Customer _____ Customer P.O.No.: _____

S.O. No.: _____ IRM W.O. No.: _____

6.2

S157033A2 Serial No. _____

#1 960SS-200 PCB Serial No . _____ Rev. Level _____

#2 960SS-200 PCB Serial No. _____ Rev. Level _____

Test Equipment	Model	Serial No.	Cal. Date	Cal. Due Date
Digital Multimeter	_____	_____	_____	_____
Oscilloscope	_____	_____	_____	_____

		Train "A"	Train "B"
6.5	Isolated AC Supply Output	_____ (120 ± 2 VAC)	_____ (120 ± 2 VAC)
6.8	Noise Output Pulse Height	_____ (6 volts p-p min.)	_____ (6 volts p-p min.)
6.9	Filter Output Pulse Height	_____ (3 ± 0.3 volts)	_____ (3 ± 0.3 volts)
6.10	Filter Output Noise	_____ (0.1 volt max.)	_____ (0.1 volt max.)

Performed by _____ **Date** _____

Q. A. Review by _____ **Date** _____

ENGINEERING		DATE 2-26-01
MANUFACTURING		DATE 2-26-01
QUALITY ASSURANCE		DATE 2/26/01
RADIATION SAFETY OFFICER	N/A	DATE N/A

Inovision Radiation Measurements			DATE 2/21/01		TITLE Test Procedure for S157033A2 Filter/Surge Suppressor Assembly	
REV 1	ECO NO. 1740	RELEASED FOR PRODUCTION	DOC CTRL	SHEET 1 of 1	NO TPS157033A2	SIZE TP