Carolina Power & Light Company

H. B. Robinson Steam Electric Plant

316 Demonstration

Volume III

Exhibits

June 30, 1976

Table of Contents

Exhibit		Page
1.0	Circulating Water System Flow Studies	3
2.1	Intensive Sampling Period Thermal Data: Water Temperature Profiles, April 1973 to March 1976	31
2.2	Continuous Recorder Data: Daily Average, Maxima and Minima, June 12, 1975 to May 10, 1976	94
2.3	Black Creek Water Temperature Data: Above the Impoundment (U.S. 1) and Below the Impoundment (SC-23) 1959, 1960, 1973, 1974	107
2.4	CP&L Analytical Methods as of January 1, 1976 Results of Water Chemistry Analyses, and Recommended Water Quality Goals for Various Water Quality Constituents, March 1973 to February 1976	114
2.5	Dissolved Oxygen Concentrations (mg/l) and Percent Saturation, April 1973 to March 1976	160
3.0	Alternate Analysis of Gill Net and Electrofishing Catch Data	237

CP&L EXHIBIT 1.0

Circulating Water System Flow Studies

1.0 Introduction

As part of the H. B. Robinson Steam Electric Plant 316 Demonstration Program, flow velocity profiles were measured within the plant intake structures and the discharge canal on March 24-26, 1976. The circulating water pumps for Unit 1 were running although the unit was off-line, and the Unit 2 circulating and service water pumps were running and drawing typical flow rates for normal full-load plant conditions. Rotating digital flow meters were used for all measurements because of their availability and their suitability for local velocity measurements. The flow meters indicate velocity magnitudes only; directional characteristics must be inferred from geometrical considerations and visual observation. This is considered sufficient since general directional patterns are known and magnitudes will have the major effect on entrapment and entrainment.

The intake structure tests are described separately from the discharge canal tests in Sections 2.0 and 3.0, respectively. Certain discussions and conclusions common to both sets of tests are presented in Section 4.0.

2.0 Intake Structure Testing

The intake structure of Unit 1 has two bays and is physically separate from the Unit 2 intake structure, which has three bays. Velocity measurements were made on the impoundment side of the mouth of the Unit 1 intake structure and in front of the traveling screens within the intake structures of both Units 1 and 2.

2.1 System Description

Five General Oceanics, Inc. Model 2030 digital flow meters were positioned approximately .76m (2.5 feet) apart within a frame as shown in Figure 2.1.1. The frame was raised and lowered by a hand crank mounted on a hoist rig as shown in Figure 2.1.2. Aerodynamic foils were placed around the horizontal pipe sections of the frame to reduce the drag force acting on the frame when in the water. Each meter was free to rotate in its vertical plane but was constrained in the horizontal plane. Wheels were included in the frame design to provide rolling friction instead of sliding friction.

Views of a typical bay of the Unit 1 intake structure are shown in Figures 2.1.3 and 2.1.4. The mouth of each bay is defined by a concrete base with a .15m (6-inch lip) (see Figure 2.1.3), a skimmer wall extending down to an elevation of 57.9m (190 feet), and vertical walls which form an opening 3.4m (11 feet 2 inches) wide and 2.9m (9 feet 6 inches high). Use of the skimmer wall results in cooler water from depths of 9.2m to 12.2m (30 to 40 feet) (typical) being drawn into the intake structure.

The frame was lowered along the outside of the skimmer wall to measure flow rates through the structure mouth. For this maneuver the hoist rig was rotated on to its side and placed against the security fence located along the edge of the structure. Measurements were taken at approximately .61m (two-foot) intervals from the lowest positions that the frame would reach in each bay.

To measure flow rates near the traveling screens of both bays, the frame was lowered into the vertical stop-log guides on the lake side of the screens. Again, measurements were made at measured intervals from the bottom position of the frame. Depth of the meters into the water was determined from markers on a rope tied to the frame. The measurement locations are noted in Figure 2.1.4.

A side view of a typical bay of the Unit 2 intake structure is shown in Figure 2.1.5, and an inside front view is given in Figure 2.1.6. The design is similar to the bay design of Unit 1, with a few significant differences. The skimmer wall does not extend down as far, resulting in a larger mouth opening; and there is no overlap of the skimmer wall with the bay floor as in Unit 1 (cf. Figure 2.1.3). This results in less directional variation in velocity and a flatter velocity profile inside the bay.

Flow rates were measured in front of the traveling screen guides by positioning the frame along the vertical stop-log guides, as was done in the Unit 1 testing. However, mouth flow rates could not be measured by this technique because objects along the outside wall interfered with the lowering of the frame. Average velocity estimates are made based on design values of volumetric flow rate and cross-sectional area.

In order to account for meter rotation during transit of the meters to and from the desired depth, correction runs were made. This consisted of lowering the frame to the desired depth and raising it immediately and recording the total counts accumulated in transit (1/10 of a meter rotation = 1 count). For Unit 2 measurements, the correction counts were determined by graphical interpolation or extrapolation of correction count data taken at various depths. This is expected to reduce the error associated with variations in lowering and raising rates.

2.2 Results

The measurement frame was lowered over the outside edge of Unit 1 intake structure, Bays A and B, until the hoist line became slack. The bottom position reached outside Bay B was 1.8m (6 feet) lower than outside Bay A and was about .15m (1/2 foot) above the concrete floor at elevation 55m (180.5 feet) (indicating slight buildup of material on the Bay B floor and some impediment 1.9m (6-1/2 feet) above the Bay A floor). From the bottom positions outside both bays, the flow was measured at .61m (2-foot) intervals to a depth well above the bottom of the skimmer wall. The flow velocity results are reported in Table 2.2.1, and profiles are plotted in Figure 2.2.1 up to the bottom of the skimmer wall.

Next, the measurement frame was lowered down the stop-log guides which are about 2.8m (9.25 feet) upstream of the centerline of the traveling screen guides. The frame stopped about .15m (1/2 foot) above the concrete floor at elevation 59.8m (196.0 feet) in Bay A and dropped all the way to the floor in Bay B. The flow velocity results of Bay A testing are given in Table 2.2.2 while Table 2.2.3 lists the Bay B results.

As previously indicated, the measurement frame could not be lowered down the outside wall of the Unit 2 intake structure because of interferences. Thus, measurements were made only along the stop-log guides, which are about 3.1m (10 feet 1.5 inches) upstream of the traveling screen headshaft, centerline to centerline. Measurements were made at .61m (2-foot) intervals in Bay C from a depth of 9.4m (30.75 feet). This depth corresponded to the frame bottom being about .38m (1.25 feet) above the concrete floor at elevation 56.7m (186.0 feet) and is the lowest point the frame could be lowered to in

this bay. Bay C flow velocity test results are given in Table 2.2.6. Bays A and B were tested at offset 1.2m (4-foot) intervals, as indicated in Tables 2.2.4 and 2.2.5. In some cases during Unit 2 testing, a meter indicator apparently did not properly increment to the next hundreds or thousands (or other) digit. In these cases the assumed proper meter reading has been used to calculate net counts and hence flow velocity. Flow velocities calculated using assumed meter readings are identified in the tables. Correction runs were generally carried out at every other depth; i.e., every 1.2m (4 feet) for Bay C and every 2.4m (8 feet) for Bays A and B. The results were plotted and correction values were read from the resulting graphs.

3. Discharge Canal Testing

Flow velocities were measured at various points across the discharge canal at a site approximately .9km (0.6 miles) from the seal well at the canal origin near the plant and across the weir at the end of the canal.

3.1 System Description

A velocity probe support structure (see Figure 3.1.1) was designed to attach to a boat and hold a velocity probe approximately 1.8m (6 feet) in front of the boat and at various depths. The probe holder could be rotated toward the boat deck for reading the meter, adjusting the depth, and controlling the sample time.

A cross section of the canal at the test site is shown in Figure 3.1.2. A cable was stretched across the canal and markers were placed every 3.7m (12 feet) from the right shoreline, looking upstream. The last marker (Number 1 in Figure 3.1.2) was 1.5m (5 feet) from the left shoreline. The cable was threaded through some piping on the boat deck so that the boat was held in place by the cable. Thus, the measurements were made about 2.1m (7 feet) upstream from the cable. At each marker the probe was lowered into the water for a measured time at both 20% and 80% of the local canal depth, except at the first and last markers where the measurements were made at mid-depth only.

An upstream view of the weir is given in Figure 3.1.3. Flow velocity was measured at mid-depth (.61m) (2 feet) at each of five test sites across the weir, labeled one through five in Figure 3.1.3. These measurements were accomplished by tying the boat to the fence above the weir and lowering the probe into the water for two minutes.

3.2 Results

The flow velocity results at the discharge canal test locations are presented in Table 3.2.1. Correction counts were obtained only at test locations 3b, 4b, and 6b. The correction count for test location 5b was assumed the same as for 4b since they were at the same depth and only 3.7m (12 feet) apart. The transit time for all other test locations was considered small enough to neglect correction counts.

Table 3.2.2 lists the flow velocities obtained at the weir test sites. From visual observation, it appeared there was not appreciable linear flow rate change across the weir except within about .3m (one foot) of the weir walls. This observation is verified by the results of Table 3.2.2. The flow velocities, V, were obtained from the count rates, C, using the linear relationship

$$V \text{ (mps)} = 0.026\ C$$

where C is in counts per second. This was obtained by linear extrapolation of the calibration curve for the meter used (#00900).

4.0 Discussion and Conclusions

In general, the flow velocity results are expected to be accurate to within 10%. This is a subjective estimate based upon the following sources of error: differences in transit time between correction runs and measurement runs (due to unintentional differences in lowering and raising rates), inaccurate sample time measurement (perhaps five seconds out of two minutes), and possible reverse rotation of the meters for a brief time during and after entry into the water. Actually, the larger velocities are probably accurate to less

than 10% whereas the velocities below .3m/sec (1.0 foot per second) may not always be within 10%. The depth measurements are expected to be accurate to within .15m (1/2 foot).

The results of Table 2.2.1 indicate that the Unit 1 mouth velocities at a depth of 9.5m (31 feet) are about 10% higher for Bay B than for Bay A. However, these measurements were made very near the bottom of the skimmer wall (see Figure 2.1.4) where the profile is changing rapidly and a slight difference in depth measurement could result in the noted difference in velocity results. Hence, it is likely that the velocities at the same depth within the two bays are about the same; i.e., less than 10% different. Only Bay B could be measured below this depth, and these results show a general decrease in velocity with increasing depth below the skimmer wall (see Figure 2.2.4). The measurements indicate the maximum velocity through the mouth is on the order of .34m/sec (1.1 feet per second). The circulating water pump design flow is $1.3m^3$/sec (47.42 cfs). At the mouth this represents an average velocity of 0.92 feet per second. The measured flows would appear to have a lower average, indicating possibly that the pumps were drawing less than design flow.

The effective flow area within each bay of the Unit 1 intake structure is never smaller than at the mouth. Hence, the maximum average flow velocity should occur at the mouth. After entering the structure, the water flows generally upward between the skimmer wall and the vertical portion of the structure floor (see Figure 2.1.3) through an area only slightly larger, $10.4m^2$ (111.67 $feet^2$), than the mouth area, $9.9m^2$ (106.08 $feet^2$). Thus, the flow profile here is similar in magnitude to that at the mouth but directed vertically instead of horizontally.

The flows inside the Unit 1 intake structure appear nowhere to exceed .5m/sec (1.5 feet per second). It is noted that the velocities at the cross section defined by the stop-log guides are quite low, generally below .001m/sec (0.25 feet per second), within 2.2m (7.25 feet) of the bottom of the structure. This is reasonable since the water must turn the corner after its vertical ascent (see Figure 2.1.3). The flow near the water surface is generally in a reverse direction (i.e., away from the pumps) and is on the order of .15m/sec (0.5 feet per second). The maximum velocities at this cross section occur just

below the horizontal support columns; i.e., at a depth of about 4.3m (14 feet). The profile in Bay B is more uniformly distributed between the depths of 1.7 and 4.7m (5.5 and 15.5 feet) than the profile in Bay A. The velocity profiles are not expected to change significantly between the stop-log guide and the face of the traveling screen, except that the screen should have a tendency to damp out directional variations and make the profile more uniform.

The geometry of the Unit 2 intake structure is such that the mouth itself is not the smallest cross-sectional flow area within the structure (hence the average velocity at the mouth is not the maximum). The cross section from the skimmer wall to the corner of the structure floor at elevation 56.7m (186 feet) (see Figure 2.1.5) is the smallest at $20.2m^2$ (217.28 feet^2). The mouth crosssectional area is $22m^2$ (236.5 feet^2). Also, there is no region of predominantly vertical flow as there was in the Unit 1 intake structure and the vertical profiles at the stop-log guides are thus much flatter.

With few exceptions, the flows at the cross section defined by the fine-screen stop-log guides within the Unit 2 bays agree fairly well at the same depths (compare Tables 2.2.4, 2.2.5, and 2.2.6). Within 1.8m (6 feet) of the concrete floor, the velocities are generally between .6 and .9m/sec (2 and 3 feet per second) .9m/sec (2.89 feet per second) is the maximum measured in all three bays. Near the water surface, the Bay C results are generally higher (around .3m/sec) (one foot per second) than the Bay A results (around .2m/sec) (0.5 feet per second) at depths areoun .9 to 2.1m (3 to 7 feet). The most complete set of results, for Bay C, show a basically flat profile from the bottom up to a depth of 5.7m (18.75 feet), a general decrease from there up to a minimum at about 1.5m (4-3/4 feet) and an increase (in the reverse direction) up to the water surface. The usually high flow rates at 3.9m (12.75 feet) deep in Bay A (above .9m/sec) (3 feet per second) are not typical of the other measurements but may indicate a region where flow is channeled by the horizontal support column.

The Unit 2 circulating water pumps are rated at 6.1×10^5 ℓ/min (160,700 gpm) each. The service water pumps are designed to supply about $30.3m^3$/min (8,000 gpm) each. Thus, total flow through each bay should be on the order of $638.6m^3$/sec (375.86 cfs). Dividing by the minimum cross-sectional area of $20.2m^2$ (217.28 feet^2) (discussed previously), a maximum design average flow

velocity in each bay of .5m/sec (1.73 feet per second) results. Because the directional variation of velocity at the stop-log guide cross section is not known exactly, it is not possible to meaningfully integrate the measured velocity profile to obtain net volumetric flow (or, alternatively, average velocity) toward the pumps. However, reference to Tables 2.2.4, 2.2.5, and 2.2.6 indicates velocities generally in the range .2 to .8m/sec (0.5 to 2.9 feet per second), which appear to be reasonable for the design flow indicated above.

The discharge canal was constructed with a 6.1m (20-foot) base and sides with 1:3 slopes, as indicated in Figure 3.1.2. The measurements within the canal indicate a gradually changing flow profile with velocity generally between .3m (one foot) and just over .6m (two feet) per second. This is expected to be very characteristic of the flow pattern all along the canal since the cross section is uniform, except for minor variations resulting from local buildup and erosion, and there are no major sources or sinks between the origin and the weir. Minor streams which feed into the canal, such as from the ash pond, introduce only a fraction of the total canal flow.

At the weir the measured flow velocities indicate a very flat lateral profile around approximately 2.0 m/sec (6.65 feet per second) all the way across the weir (except very near the edges). Theoretically, a vertical profile which varies roughly as the square root of the depth, measured from the water level behind the weir, is expected for a sharp-crested weir whose nappe is exposed to the air on the underside. However, the lake level was high enough that the underside of the nappe was not open to the atmosphere and this weir is not truly sharp-crested so the exact nature of the vertical profile is not known.

Table 2.2.1 Intake flow velocity test results, Unit 1, outside.

Horizontal distance from left side, d meters (ft)		.31 (1)	.99 (3 1/4)	1.7 (5 1/2)	2.36 (7 3/4)	3.05 (10)
Depth Meters (ft)	Verticle distance from bottom, h meters (ft)	Flow Velocities m/sec (ft/sec)				
Bay A						
8.8	3.4	*	.11	.08	.13	*
(29)	(11 1/4)	*	(0.35)	(0.27)	(0.41)	*
9.5	2.8	.25	.28	.27	.29	.26
(31)	(9 1/4)	(0.83)	(0.92)	(0.87)	(0.95)	(0.85)
Bay B						
8.9	3.4	*	.14	*	*	.09
(29)	(11 1/4)	*	(0.47)	*	*	(0.30)
9.5	2.8	.24	.33	.28	.32	.32
(31)	(9 1/4)	(0.79)	(1.09)	(0.92)	(1.05)	(1.04)
10.1	2.2	.20	.32	.02	.29	.30
(33)	(7 1/4)	(0.65)	(1.05)	(0.70)	(0.95)	(0.98)
10.7	1.6	.16	.20	.20	.28	.23
(35)	(5 1/4)	(0.54)	(0.66)	(0.66)	(0.92)	(0.77)
11.3	.99	.12	.20	.18	.18	.15
(37)	(3 1/4)	(0.39)	(0.65)	(0.56)	(0.60)	(0.50)

*Measured flow velocity was less than .076m/sec (0.25 ft/sec).

Table 2.2.2 Intake flow velocity test results, Unit 1, Bay A, inside.

Horizontal distance from left side, d meters (ft)		.305 (1)	.99 (3 1/4)	1.68 (5 1/2)	2.36 (7 3/4)	3.05 (10)
Meters Depth (ft)	Verticle distance from bottom, h meters (ft)	Flow Velocities m/sec (ft/sec)				
.08 (1/4)	7.5 (24 1/2)	.15 (0.49)	.16 (0.53)	.11 (0.36)	.16 (0.54)	.14 (0.47)
.76 (2 1/2)	6.8 (22 1/4)	.23 (0.75)	.21 (0.68)	.13 (0.44)	.20 (0.65)	.25 (0.83)
1.7 (5 1/2)	5.9 (19 1/4)	.16 (0.52)	.24 (0.79)	.21 (0.69)	.21 (0.68)	.20 (0.66)
2.3 (7 1/2)	5.3 (17 1/4)	.10 (0.32)	.15 (0.50)	.11 (0.35)	.12 (0.39)	.10 (0.32)
2.9 (9 1/2)	4.7 (15 1/4)	.09 (0.30)	.13 (0.42)	.12 (0.40)	.17 (0.56)	.13 (0.44)
3.5 (11 1/2)	4.0 (13 1/4)	.09 (0.29)	.10 (0.33)	.09 (0.28)	.11 (0.36)	.11 (0.37)
4.1 (13 1/2)	3.4 (11 1/4)	.41 (1.36)	.43 (1.41)	.31 (1.02)	.38 (1.25)	.37 (1.22)
4.7 (15 1/2)	2.8 (9 1/4)	.21 (0.70)	.25 (0.81)	.16 (0.52)	.22 (0.73)	.27 (0.89)
5.3 (17 1/2)	2.2 (7 1/4)	* *	* *	* *	.09 (0.28)	* *
5.9 (19 1/2)	1.6 (5 1/4)	* *	* *	* *	* *	* *
6.6 (21 1/2)	1.0 (3 1/4)	* *	* *	* *	* *	* *

*Measured flow velocity was less than .08m/sec (0.25 ft/sec).

Table 2.2.3 Intake flow velocity test results, Unit 1, Bay B, inside.

Horizontal distance from left side, d meters (ft)		.305 (1)	.99 (3 1/4)	1.68 (5 1/2)	2.36 (7 3/4)	3.05 (10)
Meters Depth (ft)	Verticle distance from bottom, h meters (ft)	Flow Velocities m/sec (ft/sec)				
.08 (1/4)	7.47 (24 1/2)	.16 (0.51)	.18 (0.58)	.12 (0.39)	.18 (0.59)	.16 (0.53)
.76 (2 1/2)	6.79 (22 1/4)	.25 (0.82)	.26 (0.84)	.17 (0.55)	.20 (0.65)	.25 (0.82)
1.68 (5 1/2)	5.87 (19 1/4)	.20 (0.64)	.26 (0.85)	.23 (0.75)	.27 (0.88)	.27 (0.89)
2.29 (7 1/2)	5.26 (17 1/4)	.09 (0.31)	.13 (0.44)	.12 (0.40)	.21 (0.69)	.16 (0.52)
2.90 (9 1/2)	4.65 (15 1/4)	.12 (0.39)	.14 (0.45)	.10 (0.32)	.12 (0.39)	.13 (0.43)
3.51 (11 1/2)	4.04 (13 1/4)	.12 (0.38)	.16 (0.51)	.11 (0.35)	.12 (0.39)	.13 (0.42)
4.12 (13 1/2)	3.43 (11 1/4)	.23 (0.76)	.29 (0.94)	.22 (0.72)	.29 (0.96)	.25 (0.82)
4.73 (15 1/2)	2.82 (9 1/4)	.09 (0.29)	.12 (0.39)	.07 (0.23)	.12 (0.39)	.09 (0.28)
5.34 (17 1/2)	2.21 (7 1/4)	.08 (0.25)	* *	* *	* *	* *
5.95 (19 1/2)	1.60 (5 1/4)	* *	* *	* *	* *	* *
6.71 (22)	.84 (2 3/4)	.08 (0.26)	.08 (0.26)	.10 (0.32)	.12 (0.39)	* *

*Measured flow velocity was less than .076 m/sec (0.25 ft/sec).

Table 2.2.4 Intake flow velocity test results, Unit 2, Bay A, inside.

Horizontal distance from left side, d meters (ft)		.305 (1)	.99 (3 1/4)	1.68 (5 1/2)	2.36 (7 3/4)	3.05 (10)
Depth Meters (ft)	Verticle distance from bottom, h meters (ft)	Flow Velocities m/sec (ft/sec)				
.23 (3/4)	10.37 (34)	.20 (0.64)	.20 (0.67)	.26 (0.86)	.13 (0.43)[a]	.18 (0.60)
1.45 (4 3/4)	9.15 (30)	.23 (0.74)	.19 (0.39)	.11 (0.35)	.13 (0.43)	.28 (0.92)
2.67 (8 3/4)	7.93 (26)	.37 (1.21)	.31 (1.02)	.21 (0.68)	.26 (0.85)[a]	.35 (1.15)
3.89 (12 3/4)	6.71 (22)	1.07 (3.52)	1.02 (3.36)	.94 (3.07)	1.00 (3.28)	.94 (3.07)
5.11 (16 3/4)	5.49 (18)	.61 (1.99)	.50 (1.64)	.45 (1.49)	.38 (1.23)	.51 (1.67)
6.33 (20 3/4)	4.27 (14)	.79 (2.58)[a]	.84 (2.76)	.86 (2.82)	.73 (2.40)	.68 (2.23)
7.55 (24 3/4)	3.05 (10)	.66 (2.16)[a]	.68 (2.21)	.66 (2.16)	.58 (1.90)[a]	.55 (1.79)
8.77 (28 3/4)	1.83 (6)	.56 (1.85)	.64 (2.10)	.70 (2.30)	.69 (2.27)[a]	.61 (2.00)
9.76 (32)	.84 (2 3/4)	.73 (2.40)	.74 (2.43)	.78 (2.57)	.88 (2.89)[a]	.75 (2.45)

[a]Meter indicator assumed not to have incremented properly.

Table 2.2.5 Intake flow velocity test results, Unit 2, Bay B, inside.

Horizontal distance from left side, d meters (ft)		.305 (1)	.99 (3 1/4)	1.68 (5 1/2)	2.36 (7 3/4)	3.05 (10)
Depth Meters (ft)	Verticle distance from bottom, h meters (ft)	Flow Velocities m/sec (ft/sec)				
.84 (2 3/4)	9.76 (32)	.21 (0.70)	.18 (0.59)	.18 (0.58)	.16 (0.54)[a]	.20 (0.66)
2.06 (6 3/4)	8.54 (28)	.15 (0.48)	.18 (0.58)	.16 (0.54)	.31 (1.00)[a]	.46 (1.52)
3.28 (10 3/4)	7.32 (24)	.49 (1.60)	.41 (1.34)	.38 (1.26)	.53 (1.74)	.61 (2.00)
4.50 (14 3/4)	6.1 (20)	.73 (2.39)	.61 (2.01)	.58 (1.90)	.60 (1.97)[a]	.67 (2.20)
5.72 (18 3/4)	4.88 (16)	.70 (2.30)	.59 (1.92)	.58 (1.89)	.50 (1.64)[a]	.51 (1.66)
6.94 (22 3/4)	3.66 (12)	.89 (2.92)	.90 (2.94)	.84 (2.74)	.84 (2.77)[a]	.81 (2.66)
8.16 (26 3/4)	2.44 (8)	.41 (1.34)	.50 (1.64)	.52 (1.72)	.52 (1.71)	.48 (1.57)
9.76 (32)	.84 (2 3/4)	.73 (2.40)	.80 (2.62)	.80 (2.63)	.78 (2.56)[a]	.75 (2.47)

[a]Meter indicator assumed not to have incremented properly.

Table 2.2.6 Intake flow velocity test results, Unit 2, Bay C, inside.

Horizontal distance from left side, d meters (ft)		.305 (1)	.99 (3 1/4)	1.68 (5 1/2)	2.36 (7 3/4)	3.05 (10)
Meters Depth (ft)	Verticle distance from bottom, h meters (ft)	Flow Velocities m/sec (ft/sec)				
.23 (3/4)	10.37 (34)	.31 (1.02)[a]	.34 (1.11)	.31 (1.00)	.25 (0.83)[a]	.19 (0.62
.84 (2 3/4)	9.76 (32)	.20 (0.66)	.24 (0.79)	.17 (0.55)	.20 (0.66)	.31 (1.01
1.45 (4 3/4)	9.15 (30)	.09 (0.28)	.13 (0.41)	.08 (0.27)	.11 (0.35)	.11 (0.35
2.06 (6 3/4)	8.54 (28)	.16 (0.51)	.19 (0.62)	.17 (0.55)	.16 (0.54)	.11 (0.36
2.67 (8 3/4)	7.93 (26)	.24 (0.78)	.26 (0.84)	.16 (0.54)	.22 (0.72)	.22 (0.7
3.28 (10 3/4)	7.32 (24)	.38 (1.24)	.35 (1.14)	.28 (0.90)	.35 (1.16)	.40 (1.32
3.89 (12 3/4)	6.71 (22)	.45 (1.48)	.45 (1.47)	.39 (1.29)	.42 (1.40)	.46 (1.50
4.50 (14 3/4)	6.1 (20)	.63 (2.08)	.60 (1.98)	.53 (1.74)	.54 (1.76)	.54 (1.77
5.11 (16 3/4)	5.49 (18)	.66 (2.16)	.62 (2.02)	.54 (1.77)	.53 (1.74)[a]	.57 (1.86
5.72 (18 3/4)	4.88 (16)	.77 (2.54)	.80 (2.62)	.82 (2.70)	.81 (2.66)	.77 (2.54
6.33 (20 3/4)	4.27 (14)	.82 (2.68)	.88 (2.87)	.88 (2.87)	.84 (2.77)[a]	.82 (2.68
6.94 (22 3/4)	3.66 (12)	.82 (2.69)	.84 (2.77)	.83 (2.73)	.79 (2.58)	.66 (2.16
7.55 (24 3/4)	3.05 (10)	.63 (2.08)	.67 (2.20)	.64 (2.10)	.68 (2.22)	.44 (1.45
8.16 (26 3/4)	2.44 (8)	.64 (2.10)	.68 (2.23)	.68 (2.22)	.67 (2.21)	.63 (2.07

Table 2.2.6 con't

Horizontal distance from left side, d meters (ft)		.305 (1)	.99 (3 1/4)	1.68 (5 1/2)	2.36 (7 3/4)	3.05 (10)
Depth Meters (ft)	Verticle distance from bottom, h meters (ft)	Flow Velocities m/sec (ft/sec)				
8.77 (28 3/4)	1.83 (6)	.70 (2.28)	.81 (2.64)	.87 (2.85)	.68 (2.23)	.57 (1.87)
9.38 (30 3/4)	1.22 (4)	.82 (2.70)	.85 (2.79)	.83 (2.71)	.79 (2.58)	.73 (2.38)

[a]Meter indicator assumed not to have incremented properly.

Table 3.2.1 Discharge canal flow velocities.

Test Location	Lateral Distance from Left Edge Meters (Feet)	Measurement Depth cm (Inches)	Percent of Total Depth	Corrected Meter Counts in 2 Min.	Velocity m/sec (feet/sec
1	1.53 (5)	20.32 (8)	50%	820	.18 (0.58)
2a	5.19 (17)	35.56 (14)	20%	1166	.25 (0.83)
2b		147.32 (58)	80%	2566	.56 (1.82)[a]
3a	8.85 (29)	55.88 (22)	20%	2905	.63 (2.06)
3b		213.36 (84)	80%	2732	.59 (1.94)
4a	12.51 (41)	73.66 (29)	20%	3050	.66 (2.17)
4b		292.10 (115)	80%	2359	.51 (1.68)
5a	16.17 (53)	73.66 (29)	20%	3052	.66 (2.17)
5b		292.10 (115)	80%	2576	.56 (1.83)
6a	19.83 (65)	45.72 (18)	20%	3140	.68 (2.23)
6b		182.88 (72)	80%	2548	.55 (1.81)
7	23.49 (77)	55.88 (22)	50%	1401	.31 (1.00)

[a]Meter indicator assumed not to have incremented properly.

Table 3.2.2 Flow velocities at the weir.[a]

Test Location	Lateral Distance from Left Edge (Approximate)	Meter Counts in 2 Minutes	Velocity m/sec (feet/sec)
1	3.89 12'9"	9602	2.09 (6.82)
2	7.55 24'9"	9761	2.12 (6.94)
3	11.21 36'9"	9040	1.96 (6.42)
4	13.95 45'9"	8881	1.92 (6.31)
5	18.22 59'9"	9505	2.06 (6.75)

[a]All measurements made at depth at .61m (2 feet).

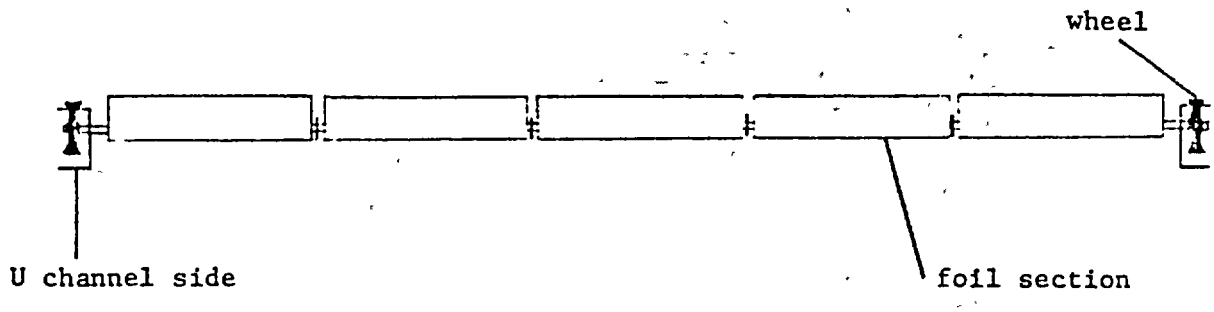

top view

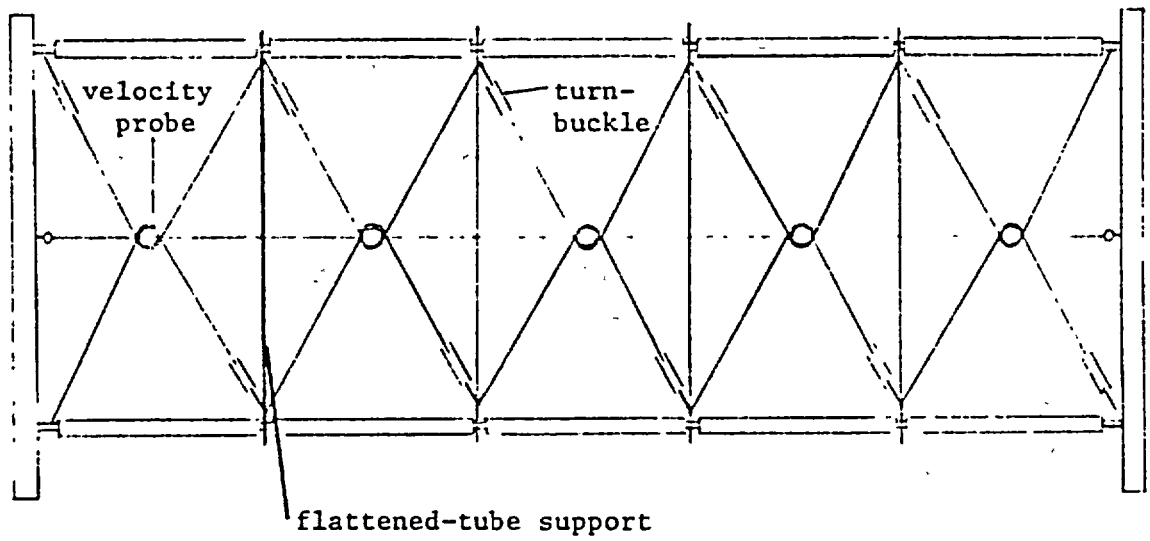

front view

Figure 2.1.1 Flow velocity measurement frame.

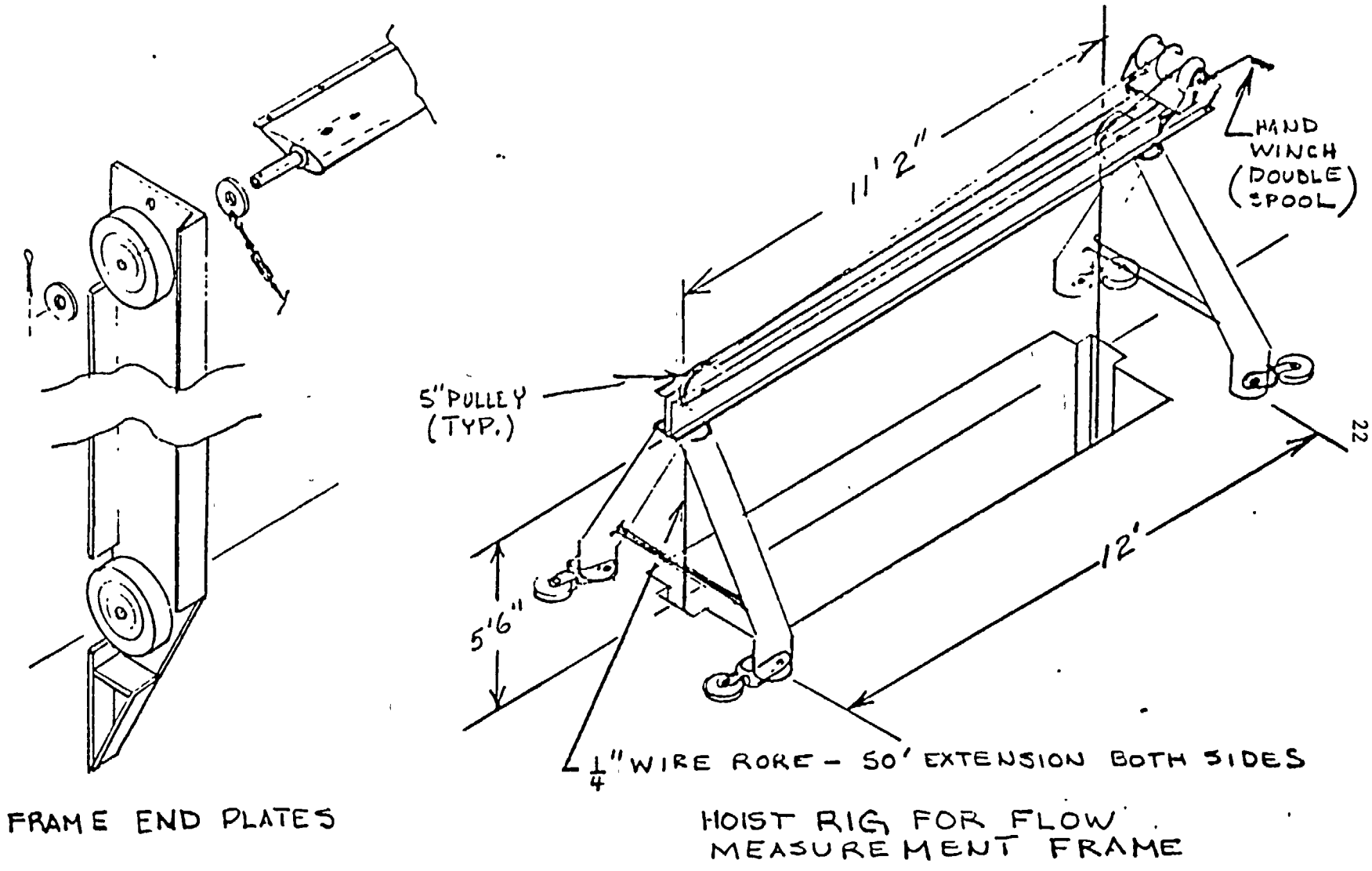

Figure2.1.2 Hoist rig for flow velocity measurement frame.

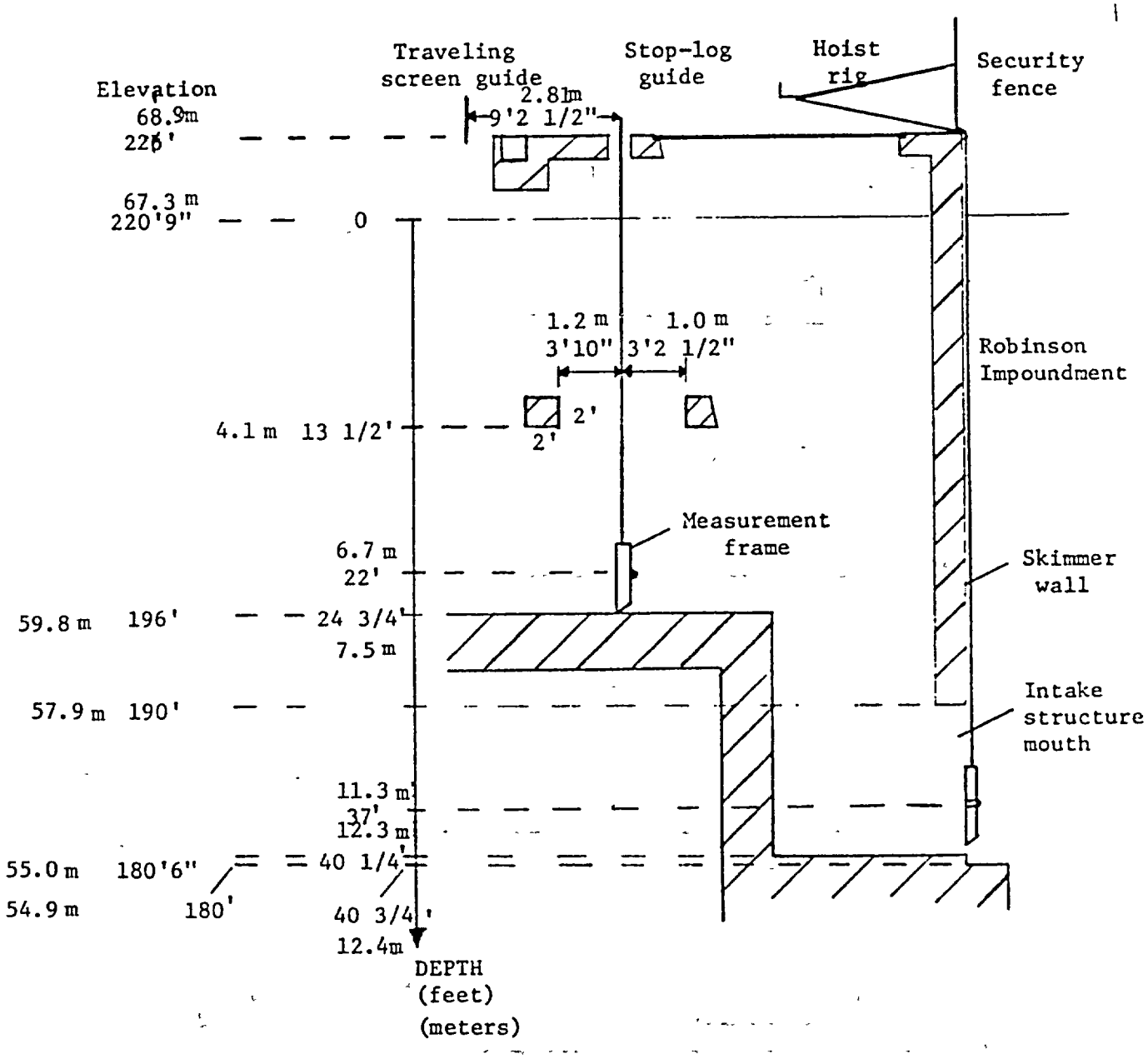

Figure 2.1.3 Side view of typical bay of Unit 1 intake structure.

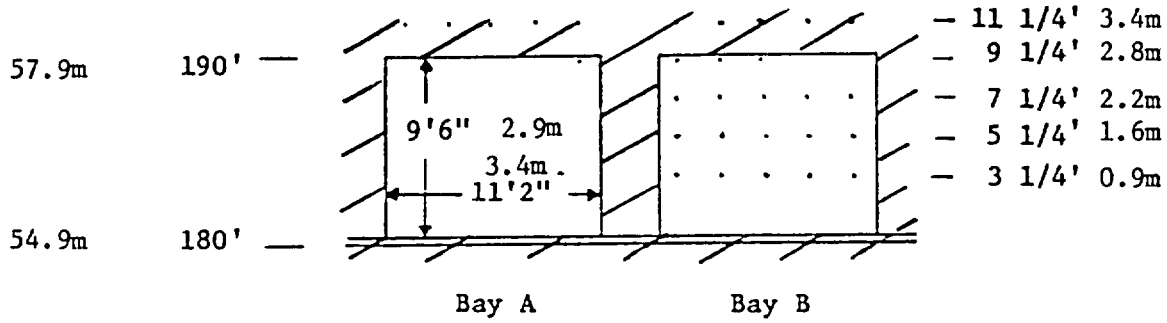

(outside view)

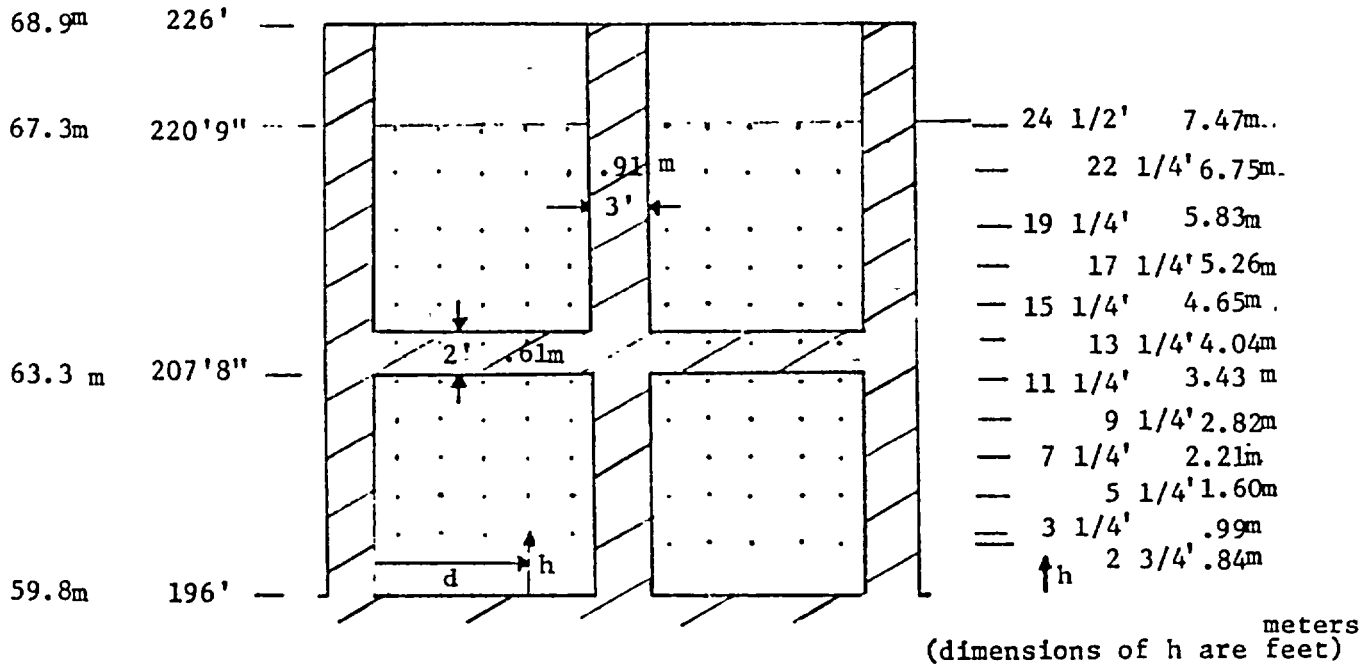

(inside view)

Figure 2.1.4 Front views of Unit 1 intake structure.

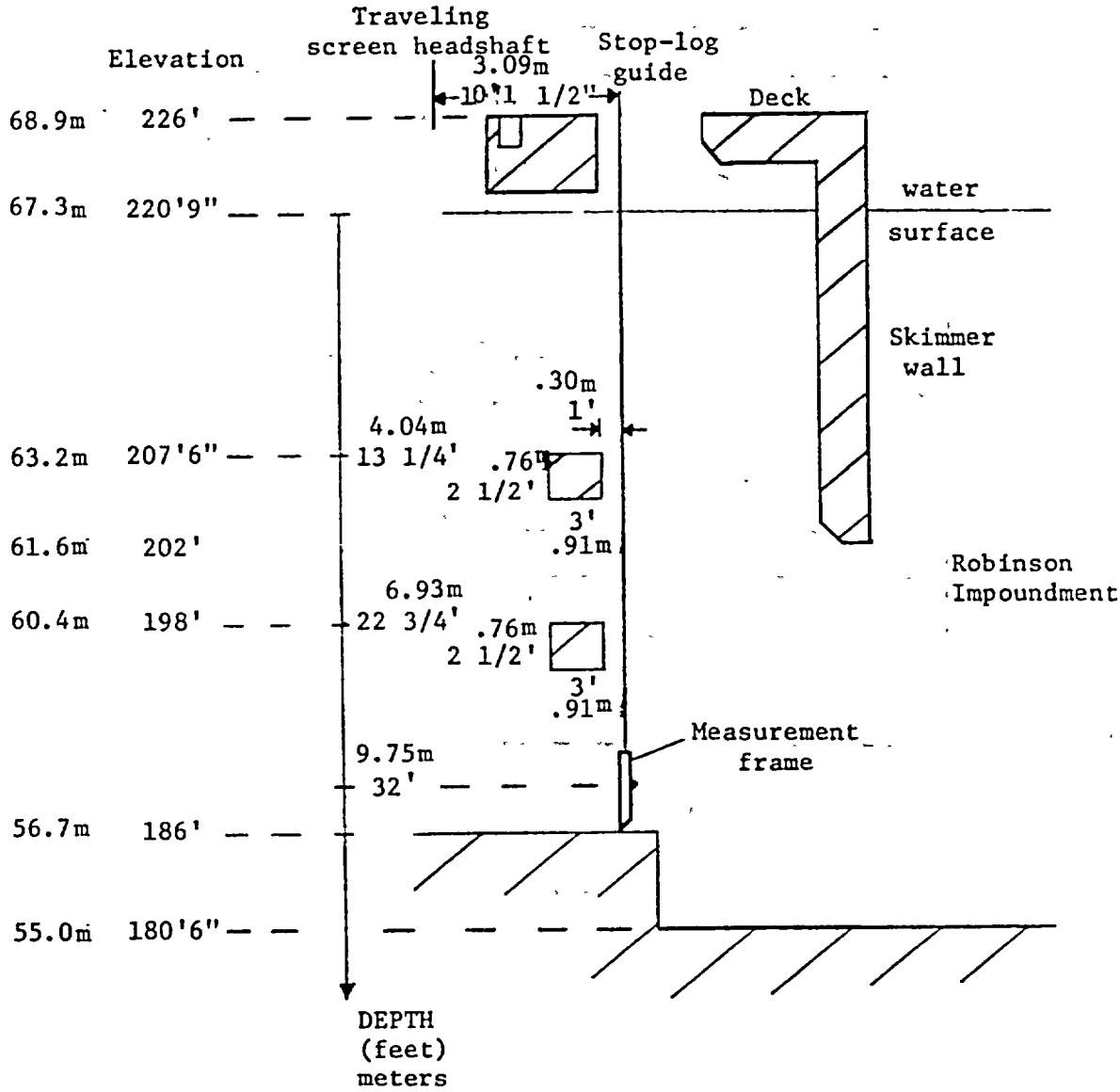

Figure 2.1.5 Side view of typical bay of Unit 2 intake structure.

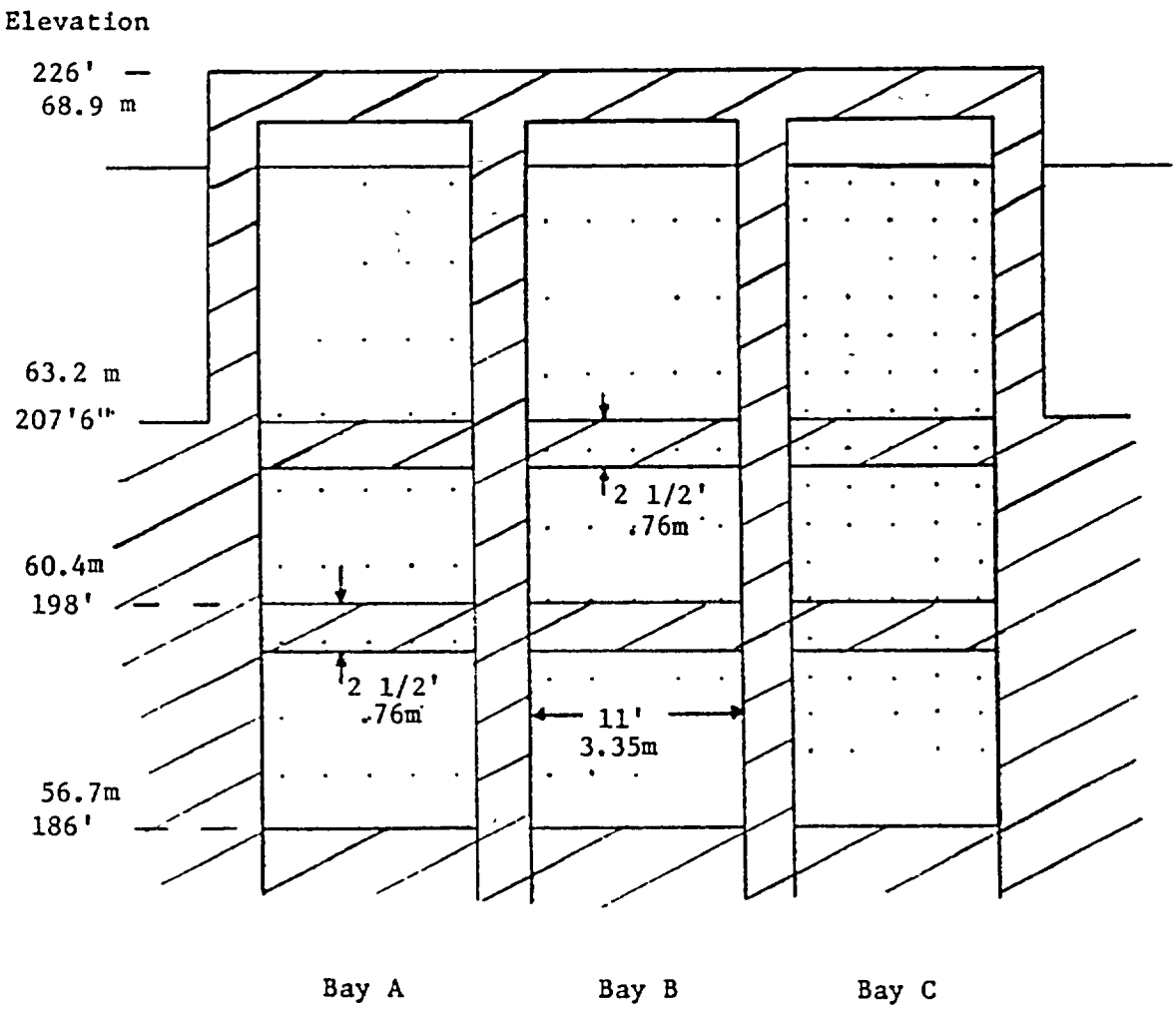

Figure 2.1.6 Front inside view of Unit 2 intake structure.

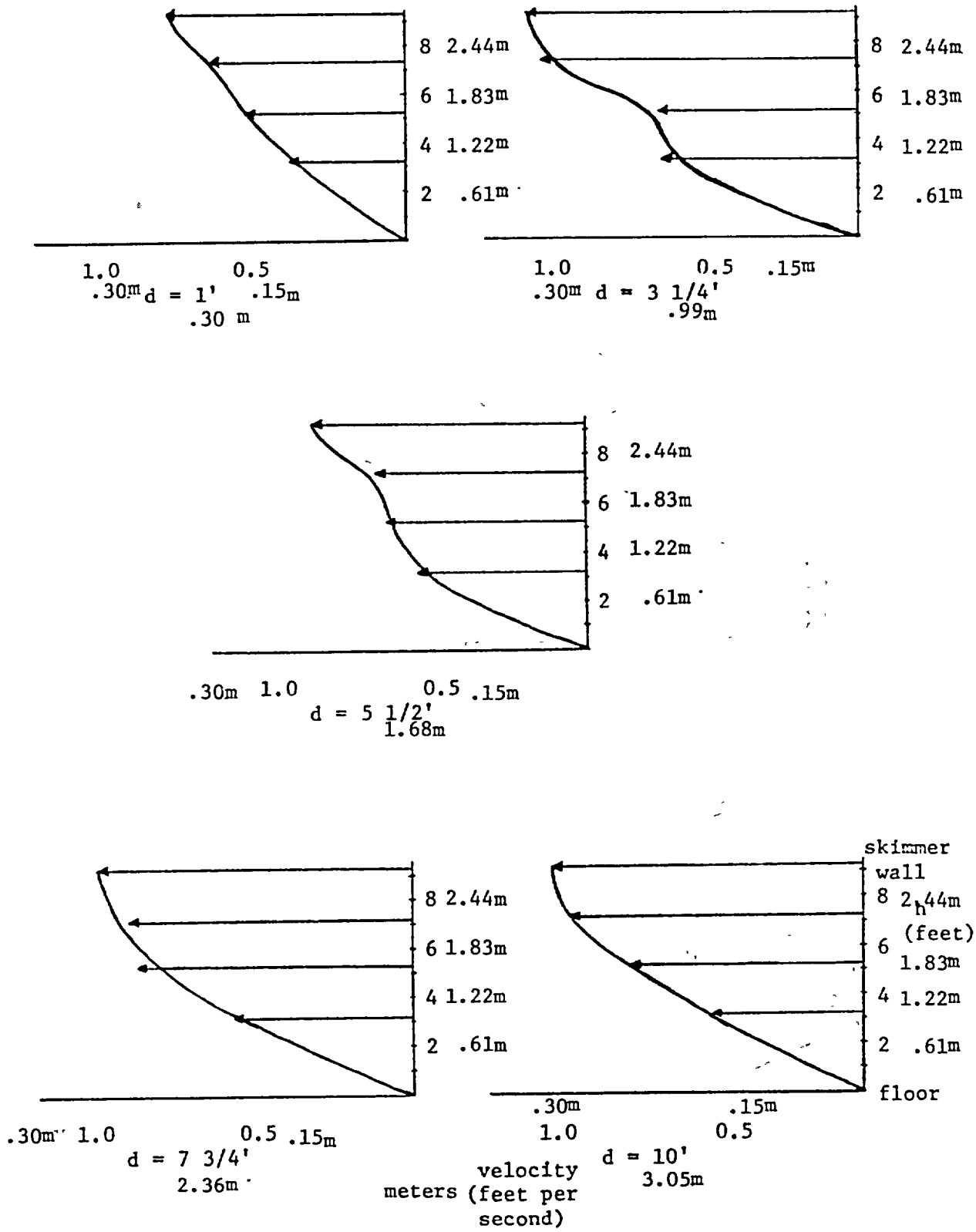

Figure 2.2.1 Measured velocities at the mouth of Bay B of the Unit 1 intake structure.

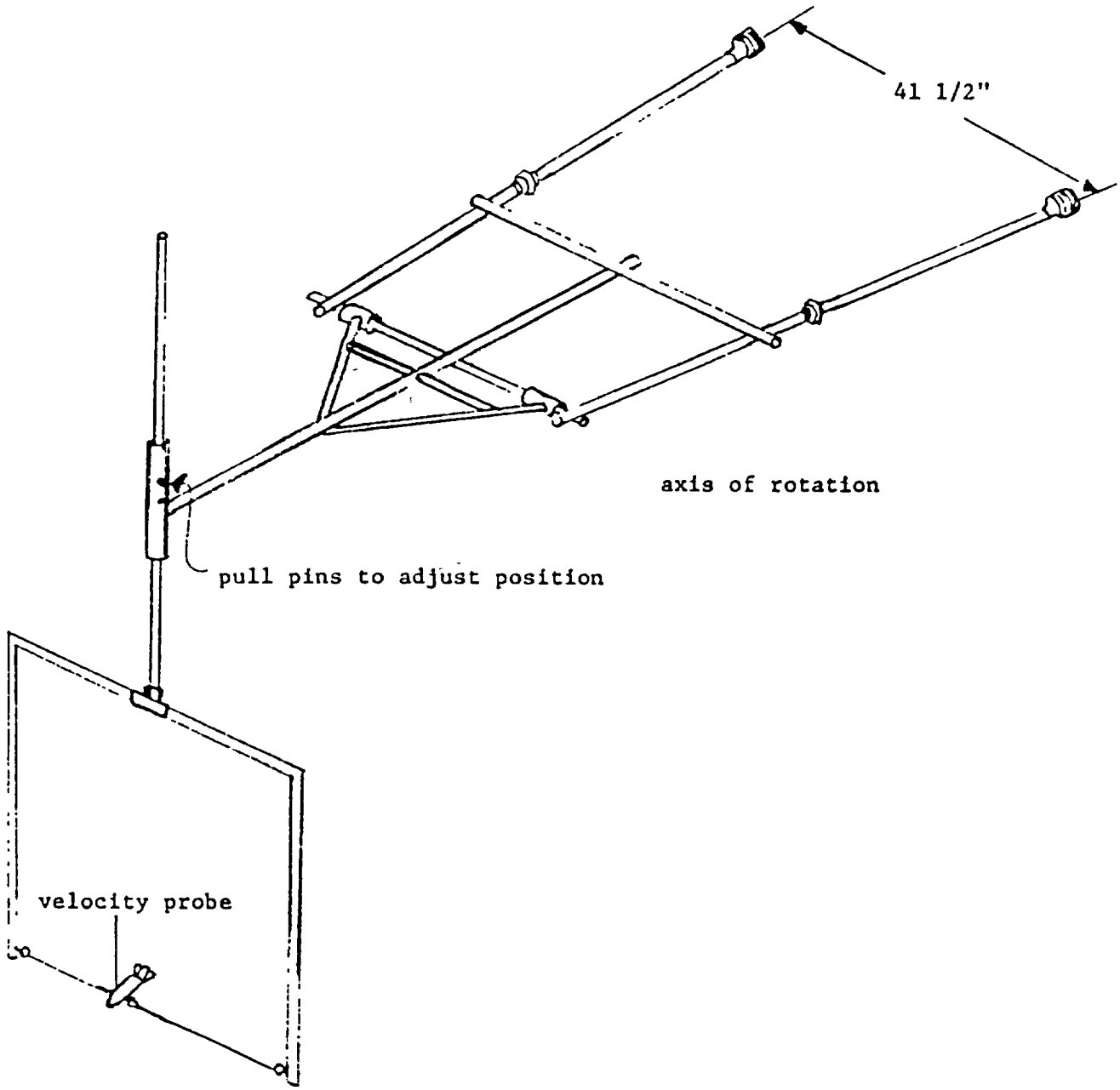

Figure 3.1.1 Velocity probe support structure.

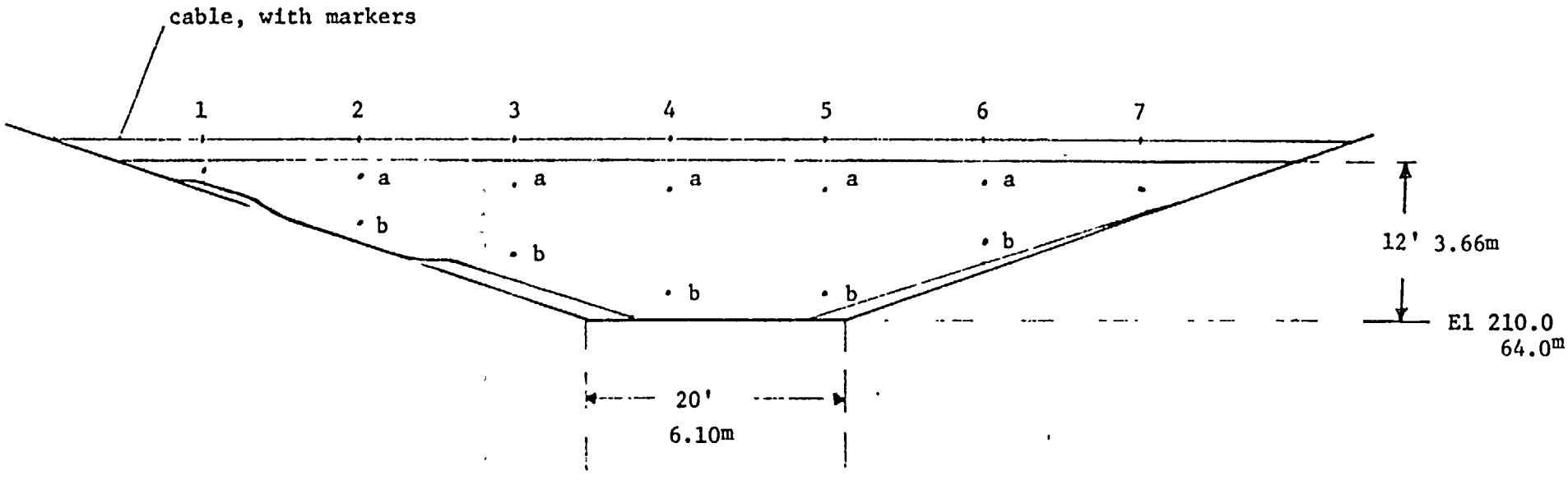

Figure . Approximate discharge canal cross section at test site (looking upstream).

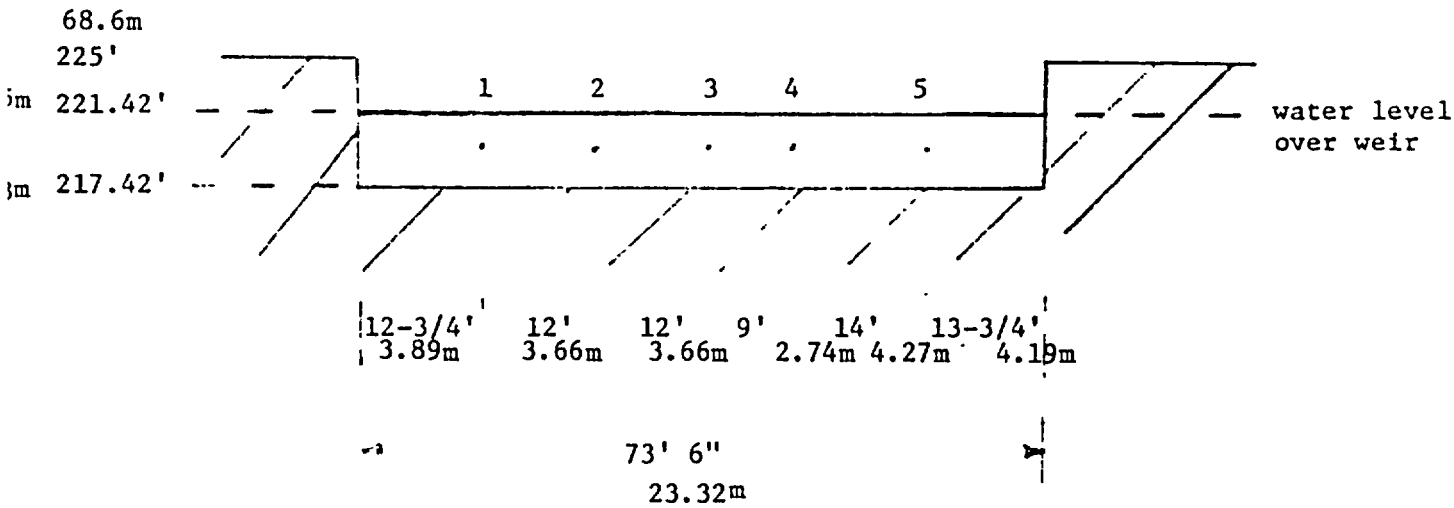

Figure 3.1.3 View of weir (looking upstream).

CP&L EXHIBIT 2.1

Intensive Sampling Period Thermal

Data: Water Temperature Profiles

April 1973 to March 1976

Water Temperature Profile Data

Water temperatures were recorded in the field to the nearest 0.1°C and converted at a later date to the nearest 1°F for reporting purposes. Therefore, the 2°C surface, north to south vertical and east to west vertical 180 therms were defined by using original field data sheets rather than Fahrenheit temperatures. Conversion of Fahrenheit temperatures contained in these data back to centigrade may result in the loss of a significant centigrade degree. For example:

$$21.4°C = 70.5°F = 71°F = 21.7°C = 22°C$$

Such cases are the exception and are not considered to significantly occur within these data.

Accuracy of the instrumentation used to record these data is considered to be $\pm$ 0.5°C ($\pm$ 0.9°F).

H. B. ROBINSON WATER TEMPERATURE PROFILE
April 18, 1973

Transect A	3	2	1
0'	64°	63°	62°
3'	63°	63°	62°
6'	63°	62°	61°
9'	62°	62°	62°
12'	63°	62°	62°
15'	63°	62°	–
18'	62°	62°	–
21'	61°	62°	–
24'	60°	–	–

Transect B	3	2	1
0'	64°	64°	64°
3'	64°	64°	63°
6'	63°	62°	63°
9'	62°	62°	62°
12'	62°	62°	62°
15'	62°	61°	61°
18'	61°	61°	61°
21'	61°	61°	60°
24'	61°	60°	60°
27'	61°	60°	60°
30'	60°	60°	60°

Transect C	3	2	1
0'	64°	64°	64°
3'	64°	64°	64°
6'	64°	64°	64°
9'	64°	64°	64°
12'	64°	62°	–
15'	61°	61°	–
18'	61°	61°	–
21'	61°	60°	–
24'	60°	60°	–
27'	60°	60°	–

Transect D	3	2	1
0'	66°	66°	66°
3'	66°	66°	66°
6'	66°	66°	66°
9'	–	66°	66°
12'	–	66°	66°
15'	–	–	63°
18'	–	–	62°

Transect E	3	2	1
0'	67°	68°	66°
3'	67°	68°	66°
6'	67°	–	66°
9'	–	–	66°
12'	–	–	66°
15'	–	–	63°
18'	–	–	62°

Station F	
0'	66°
3'	65°
6'	64°
9'	62°

Station G	
0'	65°
3'	63°
6'	62°
9'	61°
12'	58°

H. B. ROBINSON WATER TEMPERATURE PROFILE
May 22, 1973

Transect A	3	2	1
0'	74°	74°	74°
3'	74°	74°	74°
6'	74°	74°	74°
9'	74°	74°	74°
12'	74°	74°	74°
15'	74°	74°	73°
18'	72°	72°	-
21'	71°	72°	-
24'	-	71°	-
27'	-	71°	-
30'	-	71°	-
33'	-	71°	-

Transect B	3	2	1
0'	74°	74°	74°
3'	75°	74°	74°
6'	74°	74°	74°
9'	73°	74°	73°
12'	73°	73°	73°
15'	72°	72°	72°
18'	71°	71°	71°
21'	71°	71°	71°
24'	71°	71°	71°
27'	70°	71°	70°
30'	70°	70°	70°

Transect C	3	2	1
0'	77°	75°	75°
3'	75°	75°	74°
6'	75°	75°	74°
9'	73°	73°	-
12'	71°	72°	-
15'	71°	71°	-
18'	71°	71°	-
21'	71°	71°	-
24'	71°	71°	-
27'	-	71°	-

Transect D	3	2	1
0'	79°	80°	80°
3'	75°	76°	77°
6'	73°	72°	71°
9'	-	71°	71°
12'	-	-	71°
15'	-	-	71°
18'	-	-	70°

Transect E	3	2	1
0'	89°	87°	87°
3'	89°	84°	81°
6'	89°	78°	75°
9'	89°	-	69°
12'	89°	-	69°
15'	-	-	69°
18'	-	-	68°

Station F	
0'	78°
3'	71°
6'	67°
9'	67°

Station G	
0'	70°
3'	65°
6'	62°

H. B. ROBINSON WATER TEMPERATURE PROFILE
June 7, 1973

Transect A	3	2	1
0'	88°	88°	88°
3'	87°	87°	88°
6'	86°	85°	84°
9'	86°	84°	83°
12'	84°	83°	-
15'	83°	83°	-
18'	83°	82°	-
21'	-	82°	-
24'	-	80°	-
27'	-	78°	-
30'	-	77°	-

Transect B	3	2	1
0'	89°	89°	88°
3'	87°	87°	88°
6'	85°	86°	85°
9'	84°	83°	83°
12'	84°	83°	82°
15'	82°	83°	83°
18'	82°	82°	82°
21'	-	80°	81°
24'	-	79°	79°
27'	-	78°	78°
30'	-	77°	77°
33'	-	76°	76°

Transect C	3	2	1
0'	89°	88°	88°
3'	89°	87°	86°
6'	87°	84°	84°
9'	85°	84°	84°
12'	83°	83°	-
15'	82°	82°	-
18'	80°	81°	-
21'	-	80°	-
24'	-	78°	-
27'	-	77°	-

Transect D	3	2	1
0'	90°	92°	92°
3'	90°	92°	92°
6'	90°	88°	89°
9'	-	85°	85°
12'	-	84°	84°
15'	-	-	82°
18'	-	-	80°
21'	-	-	80°

Transect E	3	2	1
0'	101°	99°	97°
3'	100°	99°	97°
6'	89°	-	91°
9'	-	-	82°
12'	-	-	82°

Station F	
0'	93°
3'	86°
6'	80°
9'	79°

Station G	
0'	79°
3'	79°
6'	75°
9'	72°

H. B. ROBINSON WATER TEMPERATURE PROFILE
July 31, 1973

Transect A	3	2	1
0'	89°	89°	88°
3'	88°	88°	88°
6'	88°	88°	88°
9'	88°	88°	88°
12'	87°	87°	87°
15'	86°	87°	86°
18'	86°	87°	-
21'	86°	86°	-
24'	85°	86°	-
27'	-	85°	-

Transect B	3	2	1
0'	90°	90°	89°
3'	88°	89°	88°
6'	88°	88°	88°
9'	88°	88°	88°
12'	88°	87°	87°
15'	86°	87°	86°
18'	86°	86°	86°
21'	86°	86°	86°
24'	86°	85°	85°
27'	-	84°	84°
30'	-	84°	84°
33'	-	84°	-

Transect C	3	2	1
0'	90°	90°	90°
3'	90°	90°	89°
6'	89°	89°	89°
9'	89°	89°	-
12'	88°	89°	-
15'	88°	88°	-
18'	86°	86°	-
21'	84°	86°	-
24'	84°	84°	-
27'	-	84°	-

Transect D	3	2	1
0'	93°	95°	95°
3'	93°	93°	93°
6'	-	91°	91°
9'	-	90°	91°
12'	-	89°	91°
15'	-	-	86°
18'	-	-	84°

Transect E	3	2	1
0'	99°	99°	99°
3'	97°	99°	98°
6'	96°	97°	97°
9'	94°	88°	86°
12'	-	85°	85°

Station F	
0'	91°
3'	90°
6'	83°
9'	81°

Station G	
0'	81°
3'	80°
6'	73°

H. B. ROBINSON WATER TEMPERATURE PROFILE
August 22, 1973

Transect A	3	2	1
0'	88°	88°	90°
3'	89°	88°	90°
6'	90°	88°	89°
9'	89°	89°	89°
12'	90°	89°	89°
15'	-	89°	-
18'	-	89°	-
21'	-	89°	-

Transect B	3	2	1
0'	90°	89°	89°
3'	90°	90°	89°
6'	90°	90°	89°
9'	89°	90°	89°
12'	89°	90°	89°
15'	-	89°	88°
18'	-	89°	89°
21'	-	89°	88°
24'	-	89°	-
27'	-	89°	-
30'	-	89°	-

Transect C	3	2	1
0'	91°	90°	90°
3'	91°	90°	90°
6'	92°	90°	-
9'	91°	90°	-
12'	91°	90°	-
15'	90°	90°	-
18'	-	90°	-
21'	-	89°	-
24'	-	89°	-

Transect D	3	2	1
0'	97°	93°	95°
3'	97°	95°	95°
6'	-	95°	94°
9'	-	91°	92°
12'	-	-	92°
15'	-	-	92°
18'	-	-	92°

Transect E	3	2	1
0'	100°	97°	92°
3'	100°	99°	92°
6'	100°	99°	90°
9'	101°	-	84°
12'	102°	-	84°

Station F	
0'	84°
3'	84°
6'	82°

Station G	
0'	73°
3'	73°
6'	73°

Station H	
0'	89°
3'	89°

Station I	
0'	77°
3'	76°
6'	76°
9'	76°

H. B. ROBINSON WATER TEMPERATURE PROFILE
September 26, 1973

Transect A	3	2	1
0'	82°	82°	82°
3'	83°	82°	82°
6'	83°	82°	82°
9'	83°	82°	82°
12'	83°	82°	82°
15'	83°	82°	-
18'	83°	82°	-
21'	-	82°	-
24'	-	82°	-
27'	-	82°	-
30'	-	82°	-
33'	-	82°	-

Transect B	3	2	1
0'	82°	81°	82°
3'	83°	82°	82°
6'	84°	82°	82°
9'	84°	84°	82°
12'	83°	84°	82°
15'	-	83°	82°
18'	-	83°	82°
21'	-	82°	82°
24'	-	83°	82°
27'	-	82°	82°
30'	-	82°	82°

Transect C	3	2	1
0'	82°	82°	82°
3'	84°	82°	82°
6'	84°	82°	-
9'	84°	82°	-
12'	84°	82°	-
15'	84°	-	-
18'	84°	-	-

Transect D	3	2	1
0'	88°	86°	81°
3'	88°	86°	82°
6'	-	86°	82°
9'	-	-	82°
12'	-	-	82°
15'	-	-	81°

Transect E	3	2	1
0'	95°	93°	86°
3'	93°	95°	86°
6'	93°	90°	84°
9'	-	-	82°

Station F	
0'	82°
3'	82°
6'	79°
9'	79°

Station G	
0'	72°
3'	72°
6'	72°

Station H	
0'	82°
3'	82°

Station I	
0'	75°
3'	73°
6'	73°

H. B. ROBINSON WATER TEMPERATURE PROFILE
October 24, 1973

Transect A	3	2	1
0'	73°	73°	72°
3'	74°	73°	73°
6'	74°	73°	73°
9'	74°	73°	73°
12'	74°	73°	-
15'	74°	73°	-
18'	74°	73°	-
21'	74°	73°	-
24'	74°	73°	-
27'	-	73°	-
30'	-	73°	-

Transect B	3	2	1
0'	73°	72°	72°
3'	73°	73°	73°
6'	73°	73°	73°
9	73°	73°	73°
12'	73°	73°	73°
15'	-	73°	73°
18'	-	73°	73°
21'	-	73°	73°
24'	-	73°	73°
27'	-	73°	73°

Transect C	3	2	1
0'	73°	73°	73°
3'	73°	73°	74°
6'	73°	73°	75°
9'	73°	73°	-
12'	73°	73°	-
15'	73°	73°	-
18'	73°	73°	-
21'	73°	73°	-

Transect D	3	2	1
0'	77°	77°	77°
3'	79°	79°	77°
6'	-	78°	77°
9'	-	76°	77°
12'	-	-	75°
15'	-	-	73°
18'	-	-	72°
21'	-	-	72°

Transect E	3	2	1
0'	88°	84°	79°
3'	88°	83°	80°
6'	-	80°	73°
9'	-	-	70°

Station F	
0'	72°
3'	73°
6'	73°

Station G	
0'	63°
3'	62°
6'	62°

Station H	
0'	75°

Station I	
0'	64°
3'	63°
6'	63°

H. B. ROBINSON WATER TEMPERATURE PROFILE
November 27, 1973

Transect A	3	2	1
0'	68°	68°	68°
3'	68°	68°	67°
6'	68°	68°	67°
9'	67°	68°	-
12'	67°	67°	-
15'	67°	67°	-
18'	-	67°	-
21'	-	67°	-

Transect B	3	2	1
0'	68°	68°	68°
3'	67°	68°	68°
6'	67°	68°	68°
9'	67°	67°	68°
12'	67°	67°	68°
15'	67°	67°	68°
18'	67°	67°	67°
21'	66°	67°	-
24'	-	67°	-
27'	-	66°	-
30'	-	66°	-
33'	-	66°	-

Transect C	3	2	1
0'	68°	68°	68°
3'	68°	68°	68°
6'	68°	68°	68°
9'	68°	68°	-
12'	68°	68°	-
15'	-	68°	-
18'	-	68°	-
21'	-	68°	-
24'	-	68°	-

Transect D	3	2	1
0'	68°	68°	68°
3'	68°	68°	68°
6'	-	68°	68°
9'	-	68°	68°
12'	-	-	68°
15'	-	-	67°

Transect E	3	2	1
0'	70°	69°	70°
3'	70°	70°	72°
6'	70°	70°	72°
9'	70°	68°	68°
12'	70°	-	65°

Station F	
0'	69°
3'	69°
6'	64°

Station G	
0'	66°
3'	66°
6'	64°

Station H	
0'	68°
3'	68°

Station I	
0'	64°
3'	64°
6'	64°

H. B. ROBINSON WATER TEMPERATURE PROFILE
December 19, 1973

Transect A	3	2	1
0'	54°	52°	52°
3'	54°	54°	54°
6'	54°	54°	54°
9'	54°	54°	54°
12'	54°	54°	-
15'	54°	54°	-
18'	54°	54°	-
21'	54°	54°	-
24'	54°	54°	-
27'	54°	54°	-
30'	54°	54°	-
33'	54°	54°	-
36'	54°	54°	-
39'	54°	-	-

Transect B	3	2	1
0'	55°	54°	53°
3'	56°	56°	54°
6'	56°	56°	54°
9'	56°	56°	54°
12'	56°	56°	54°
15'	56°	56°	54°
18'	-	56°	54°
21'	-	55°	54°
24'	-	55°	54°
27'	-	55°	54°
30'	-	55°	54°
33'	-	55°	54°

Transect C	3	2	1
0'	56°	54°	52°
3'	56°	55°	52°
6'	57°	55°	52°
9'	57°	55°	52°
12'	56°	55°	-
15'	56°	-	-

Transect D	3	2	1
0'	61°	60°	56°
3'	61°	61°	57°
6'	61°	59°	57°
9'	-	59°	55°
12'	-	-	54°
15'	-	-	54°
18'	-	-	51°
21'	-	-	51°
24'	-	-	50°

Transect E	3	2	1
0'	68°	66°	63°
3'	68°	66°	64°
6'	68°	64°	59°
9'	-	-	48°
12'	-	-	47°

Station F	
0'	48°
3'	47°
6'	41°
9'	41°

Station G	
0'	41°
3'	43°
6'	43°

Station H	
0'	52°
3'	53°
6'	53°

Station I	
0'	38°
3'	38°
6'	38°

LAKE ROBINSON WATER TEMPERATURES

January 22, 1974

Transect A	3	2	1
0'	69°	65°	67°
3'	69°	65°	67°
6'	67°	64°	64°
9'	67°	64°	64°
12'	66°	64°	64°
15'	66°	64°	64°
18'	66°	64°	64°
21'	66°	64°	64°
24'	65°	63°	63°
27'	65°	62°	62°
30'	65°	62°	62°
33'	64°	62°	62°
36'	64°	62°	62°

Transect B	3	2	1
0'	66°	66°	68°
3'	66°	66°	67°
6'	65°	66°	65°
9'	65°	64°	65°
12'	65°	64°	64°
15'	65°	64°	64°
18'	65°	64°	64°
21'	64°	64°	64°
24'	63°	64°	64°
27'	63°	63°	63°
30'	62°	63°	63°
33'	-	-	62°

Transect C	3	2	1
0'	68°	69°	68°
3'	67°	68°	67°
6'	67°	67°	66°
9'	66°	66°	-
12'	65°	65°	-
15'	64°	64°	-
18'	64°	63°	-
21'	63°	62°	-
24'	62°	61°	-
27'	61°	61°	-

Transect D	3	2	1
0'	71°	72°	73°
3'	70°	71°	72°
6'	69°	70°	68°
9'	-	66°	66°
12'	-	64°	65°
15'	-	64°	64°
18'	-	61°	62°

Transect E	3	2	1
0'	77°	77°	75°
3'	79°	77°	76°
6'	78°	74°	72°
9'	-	-	64°

Point F	
0'	66°
3'	64°
6'	63°
9'	61°

Point G	
0'	59°
3'	58°
6'	57°

Point H	
0'	65°
3'	65°
6'	64°

Point I	
0'	61°
3'	59°
6'	58°
9'	58°

H. B. ROBINSON WATER TEMPERATURE PROFILE

February 12, 1974

Transect A	3	2	1
0'	59°	61°	60°
3'	60°	61°	61°
6'	61°	61°	61°
9'	61"	61°	61°
12'	61°	61°	61°
15'	61°	61°	60°
18'	61°	61°	60°
21'	61°	61°	60°
24'	61°	60°	--
27'	61°	60°	--
30'	61°	60°	--
33'	61°	60°	--
36'	60°	60°	--

Transect B	3	2	1
0'	61°	61°	61°
3'	62°	62°	62°
6'	62°	62°	62°
9'	62°	62°	62°
12'	62°	62°	62°
15'	62°	62°	62°
18'	62°	62°	61°
21'	60°	62°	61°
24'	60°	60°	61°
27'	60°	60°	61°
30'	60°	60°	61°
33'	60°	60°	61°
36	60°	60°	--

Transect C	3	2	1
0'	64°	63°	63°
3'	64°	63°	63°
6'	63°	63°	63°
9'	63°	63°	63°
12'	63°	63°	--
15'	63°	62°	--
18'	63°	62°	--
21'	63°	61°	--
24'	63°	62°	--
27'	--	61°	--

Transect D	3	2	1
0'	65°	64°	66°
3'	66°	65°	67°
6'	64°	65°	65°
9'	--	64°	64°
12'	--	61°	62°
15'	--	--	59°
18'	--	--	59°

Transect E	3	2	1
0'	74°	72°	72°
3'	74°	73°	72°
6'	74°	72°	72°
9'	75°	--	54°
12'	75°	--	53°
15'	75°	--	--

Point F	
0'	64°
3'	50°
6'	49°
9'	49°

Point G
48°
47°
47°
--

Point H	
0'	61°
3'	61°

Point I	
0'	45°
3'	44°
6'	44°
9'	44°
12'	44°

H. B. ROBINSON WATER TEMPERATURE PROFILES

March 18, 1974

Transect A	3	2	1
0'	65°	65°	65°
3'	65°	65°	65°
6'	64°	64°	64°
9'	64°	64°	64°
12'	64°	64°	64°
15'	64°	64°	64°
18'	64°	64°	---
21'	63°	63°	---
24'	63°	63°	---
27'	NA	NA	---
30'	↓	NA	---
33'		NA	---
36'		NA	---

Transect B	3	2	1
0'	68°	68°	68°
3'	66°	65°	66°
6'	66°	64°	65°
9'	64°	64°	64°
12'	64°	64°	64°
15'	64°	64°	64°
18'	64°	64°	64°
21'	64°	64°	64°
24'	64°	64°	64°
27'	NA	NA	NA
30'	↓	NA	↓
33'		NA	

Transect C	3	2	1
0'	68°	68°	68°
3'	66°	66°	66°
6'	65°	65°	64°
9'	64°	65°	---
12'	64°	65°	---
15'	64°	64°	---
18'	64°	64°	---
21'	64°	64°	---
24'	64°	64°	---
27'	NA	NA	---
	↓		

Transect D	3	2	1
0'	72°	71°	72°
3'	70°	70°	72°
6'	68°	68°	68°
9'	---	67°	66°
12'	---	66°	66°
15'	---	---	66°
18'	---	---	66°
21'	---	---	66°
24'	---	---	NA
			↓

Transect E	3	2	1
0'	79°	77°	75°
3'	79°	75°	75°
6'	79°	71°	71°
9'	80°	---	61°
12'	81°	---	60°
15'	81°	---	---

Station F	
0'	67°
3'	63°
6'	57°
9'	56°

Station G	
0'	56°
3'	54°
6'	54°

Station H	
0'	66°
3'	65°

Station I	
0'	58°
3'	57°
6'	56°
9'	55°

NA - Not available: portable thermister - DO probe cord length = 24'. Temperatures - DO's below this depth were not sampled and water depth not recorded except at transect A - station 2 and transect B - station 2 where Winkler DO's sampled.

H. B. ROBINSON WATER TEMPERATURE PROFILE

April 24, 1974

Transect A	3	2	1
0'	72°	71°	72°
3'	72°	71°	72°
6'	72°	71°	72°
9'	72°	72°	72°
12'	72°	72°	72°
15'	---	72°	72°
18'	---	72°	72°
21'	---	72°	72°
24'	---	72°	72°
27'	---	72°	---
30'	---	72°	---
33'	---	72°	---
36'	---	72°	---

Transect B	3	2	1
0'	73°	73°	72°
3'	73°	73°	73°
6'	73°	73°	73°
9'	73°	73°	73°
12'	73°	73°	73°
15'	73°	73°	73°
18'	72°	73°	73°
21'	72°	72°	73°
24'	72°	72°	72°
27'	72°	72°	72°
30'	72°	72°	72°
33'	72°	---	72°

Transect C	3	2	1
0'	73°	73°	73°
3'	74°	73°	73°
6'	74°	73°	73°
9'	74°	74°	---
12'	74°	74°	---
15'	74°	74°	---
18'	74°	74°	---
21'	73°	74°	---
24'	73°	73°	---
27'	73°	73°	---

Transect D	3	2	1
0'	77°	77°	77°
3'	78°	78°	77°
6'	77°	77°	77°
9'	74°	74°	76°
12'	---	---	74°
15'	---	---	74°
18'	---	---	73°

Transect E	3	2	1
0'	87°	82°	80°
3'	87°	82°	81°
6'	87°	82°	80°
9'	---	---	74°
12'	---	---	75°

Station F	
0'	70°
3'	69°
6'	70°
9'	69°

Station G	
0'	66°
3'	66°
6'	66°

Station H	
0'	70°
3'	70°
6'	71°

Station I	
0'	67°
3'	66°
6'	66°

H. B. ROBINSON WATER TEMPERATURE PROFILE

May 21, 1974

Transect A	3	2	1
0'	80°	76°	79°
3'	76°	76°	78°
6'	75°	75°	78°
9'	75°	75°	78°
12'	74°	75°	75°
15'	74°	75°	75°
18'	74°	75°	74°
21'	73°	74°	74°
24'	73°	73°	73°
27'	-	73°	-
30'	-	72°	-
33'	-	72°	-
36'	-	71°	-
39'	-	71°	-

Transect B	3	2	1
0'	75°	77°	75°
3'	75°	77°	75°
6'	75°	77°	75°
9'	75°	76°	75°
12'	75°	76°	75°
15'	75°	76°	75°
18'	75°	76°	75°
21'	73°	75°	75°
24'	73°	74°	74°
27'	73°	73°	73°
30'	73°	73°	73°

Transect C	3	2	1
0'	75°	78°	77°
3'	76°	76°	77°
6'	76°	76°	77°
9'	76°	75°	-
12'	75°	75°	-
15'	75°	75°	-
18'	75°	75°	-
21'	75°	75°	-
24'	73°	73°	-
27'	-	73°	-

Transect D	3	2	1
0'	76°	76°	77°
3'	76°	76°	77°
6'	76°	76°	76°
9'	76°	76°	76°
12'	-	74°	75°
15'	-	73°	75°
18'	-	-	74°

Transect E	3	2	1
0'	79°	79°	79°
3'	79°	77°	77°
6'	79°	-	77°
9'	79°	-	75°
12'	79°	-	
15'	79°	-	-

Station F	
0'	77°
3'	77°
6'	75°
9'	75°

Station G	
0'	73°
3'	73°
6'	70°

Station H	
0'	77°
3'	77°
6'	77°

Station I	
0'	70°
3'	70°
6'	70°

H. B. ROBINSON WATER TEMPERATURE PROFILE

May 23, 1974

Transect A	3	2	1
0'	77°	77°	76°
3'	77°	77°	76°
6'	77°	77°	76°
9'	77°	77°	77°
12'	77°	77°	77°
15'	77°	77°	77°
18'	77°	77°	77°
21'	77°	77°	-
24'	-	77°	-
27'	-	76°	-
30'	-	75°	-
33'	-	75°	-

Transect B	3	2	1
0'	78°	78°	78°
3'	78°	78°	78°
6'	78°	78°	78°
9'	77°	78°	78°
12'	77°	78°	78°
15'	77°	77°	77°
18'	77°	77°	77°
21'	77°	77°	77°
24'	76°	77°	76°
27'	76°	76°	76°
30'	75°	75°	75°
33'	-	75°	75°

Transect C	3	2	1
0'	79°	78°	77°
3'	79°	78°	77°
6'	79°	78°	77°
9'	78°	78°	-
12'	78°	78°	-
15'	78°	78°	-
18'	78°	78°	-
21'	78°	78°	-
24'	77°	77°	-
27'	-	77°	-

Transect D	3	2	1
0'	78°	78°	79°
3'	78°	78°	78°
6'	77°	78°	78°
9'	-	78°	78°
12'	-	78°	78°
15'	-	78°	78°
18'	-	77°	78°

Transect E	3	2	1
0'	84°	82°	82°
3'	84°	82°	81°
6'	84°	82°	81°
9'	-	-	77°
12'	-	-	76°

Station F	
0'	79°
3'	77°
6'	76°
9'	75°

Station G	
0'	76°
3'	73°
6'	73°

Station H	
0'	76°
3'	76°

Station I	
0'	72°
3'	72°
6'	72°
9'	72°

H. B. ROBINSON WATER TEMPERATURE PROFILE

June 27, 1974

Transect A	3	2	1
0'	79°	79°	79°
3'	79°	79°	79°
6'	79°	79°	79°
9'	79°	79°	79°
12'	79°	79°	79°
15'	79°	79°	-
18'	79°	79°	-
21'	79°	79°	-
24'	79°	79°	-
27'	-	79°	-
30'	-	79°	-
33'	-	79°	-

Transect B	3	2	1
0'	78°	78°	79°
3'	79°	78°	79°
6'	79°	78°	79°
9'	79°	78°	79°
12'	79°	78°	79°
15'	79°	78°	79°
18'	79°	78°	79°
21'	79°	78°	79°
24'	79°	78°	79°
27'	-	79°	79°
30'	-	79°	79°
33'	-	79°	-

Transect C	3	2	1
0'	78°	79°	79°
3'	78°	79°	79°
6'	78°	79°	-
9'	78°	79°	-
12'	78°	79°	-
15'	78°	79°	-
18'	79°	79°	-
21'	79°	79°	-
24'	79°	79°	-

Transect D	3	2	1
0'	79°	80°	77°
3'	81°	80°	80°
6'	81°	80°	80°
9'	-	79°	79°
12'	-	80°	79°
15'	-	78°	79°
18'	-	78°	79°

Transect E	3	2	1
0'	85°	84°	82°
3'	86°	84°	82°
6'	85°	-	82°
9'	-	-	80°
12'	-	-	80°

Station F	
0'	76°
3'	76°
6'	76°

Station G	
0'	72°
3'	73°
6'	73°

Station H	
0'	78°
3'	-
6'	-

Station I	
0'	68°
3'	-
6'	-

H. B. ROBINSON WATER TEMPERATURE PROFILE

July 11, 1974

Transect A	3	2	1
0'	89°	88°	88°
3'	89°	88°	88°
6'	89°	88°	88°
9'	88°	88°	88°
12'	88°	88°	88°
15'	88°	88°	-
18'	88°	88°	-
21'	88°	86°	-
24'	-	84°	-
27'	-	83°	-
30'	-	82°	-
33'	-	82°	-

Transect B	3	2	1
0'	88°	88°	88°
3'	88°	88°	88°
6'	88°	88°	88°
9'	88°	88°	88°
12'	88°	88°	88°
15'	86°	86°	86°
18'	85°	85°	86°
21'	84°	85°	84°
24'	83°	84°	83°
27'	82°	81°	82°
30'	81°	80°	81°
33'	-	80°	79°

Transect C	3	2	1
0'	90°	90°	90°
3'	90°	90°	90°
6'	90°	90°	90°
9'	90°	88°	-
12'	89°	88°	-
15'	85°	84°	-
18'	84°	85°	-
21'	84°	85°	-
24'	83°	-	-
27'	82°	-	-

Transect D	3	2	1
0'	93°	94°	93°
3'	94°	94°	93°
6'	93°	94°	93°
9'	-	86°	87°
12'	-	85°	85°
15'	-	80°	82°
18'	-	80°	81°

Transect E	3	2	1
0'	102°	99°	98°
3'	102°	100°	98°
6'	102°	99°	98°
9'	-	-	82°
12'	-	-	79°

Station F	
0'	90°
3'	90°
6'	88°
9'	80°

Station G	
0'	84°
3'	84°
6'	77°

Station H	
0'	85°
3'	86°
6'	86°

Station I	
0'	75°
3'	-*
6'	-*

*Not Available

H. B. ROBINSON WATER TEMPERATURE PROFILE
August 29, 1974

Transect A	3	2	1
0'	87°	86°	86°
3'	87°	86°	86°
6'	87°	86°	86°
9'	87°	86°	86°
12'	87°	86°	--
15'	86°	86°	--
18'	86°	86°	--
21'	86°	85°	--
24'	86°	84°	--
27'	--	84°	--
30'	--	83°	--
33'	--	82°	--
36'	--	82°	--

Transect B	3	2	1
0'	88°	88°	88°
3'	88°	88°	88°
6'	88°	88°	88°
9'	87°	87°	88°
12'	87°	87°	88°
15'	86°	86°	87°
18'	86°	86°	86°
21'	86°	86°	86°
24'	85°	85°	86°
27'	84°	85°	84°
30'	84°	77°	84°

Transect C	3	2	1
0'	88°	88°	88°
3'	88°	88°	88°
6'	88°	88°	88°
9'	88°	88°	--
12'	88°	88°	--
15'	86°	88°	--
18'	86°	87°	--
21'	85°	84°	--
24'	84°	84°	--

Transect CA	3	2	1
0'	88°	88°	88°
3'	88°	89°	88°
6'	88°	90°	88°
9'	--	89°	88°
12'	--	88°	--
15'	--	88°	--
18'	--	87°	--
21'	--	86°	--

Transect D	3	2	1
0'	91°	91°	93°
3'	91°	91°	93°
6'	91°	91°	93°
9'	--	91°	91°
12'	--	91°	90°
15'	--	--	88°
18'	--	--	86°

Transect E	3	2	1
0'	100°	100°	97°
3'	101°	97°	97°
6'	102°	96°	97°
9'	102°	88°	91°
12'	103°	87°	--

Station F		
	0'	91°
	3'	91°

Station G		
	0'	84°
	3'	82°
	6'	81°
	9'	80°
	12'	80°

Station H		
	0'	86°
	3'	86°

Station I		
	0'	79°
	3'	78°
	6'	78°

Station J		
	0'	78°
	3'	77°
	6'	77°

Station K		
	0'	85°
	3'	86°
	6'	85°

H. B. ROBINSON WATER TEMPERATURE PROFILES
September 4, 1974

Transect A	3	2	1
0'	85°	84°	83°
3'	84°	84°	83°
6'	84°	84°	83°
9'	84°	84°	83°
12'	84°	84°	--
15'	84°	84°	--
18'	84°	84°	--
21'	84°	84°	--
24'	--	84°	--
27'	--	84°	--
30'	--	84°	--
33'	--	84°	--

Transect B	3	2	1
0'	84°	84°	84°
3'	85°	84°	84°
6'	85°	84°	84°
9'	85°	84°	84°
12'	85°	84°	84°
15'	85°	84°	84°
18'	85°	84°	84°
21'	85°	84°	84°
24'	85°	84°	84°
27'	85°	84°	84°
30'	--	84°	84°
33'	--	84°	84°

Transect C	3	2	1
0'	86°	85°	83°
3'	86°	85°	84°
6'	86°	85°	84°
9'	86°	85°	83°
12'	86°	85°	--
18'	86°	85°	--
21'	85°	--	--
24'	85°	--	--

Transect CA	3	2	1
0'	89°	88°	86°
3'	89°	88°	86°
6'	89°	88°	86°
9'	88°	87°	86°
12'	--	87°	86°
15'	--	86°	85°
18'	--	86°	85°
21'	--	86°	--
24'	--	86°	--

Transect D	3	2	1
0'	91°	90°	90°
3'	91°	91°	90°
6'	91°	91°	90°
9'	--	86°	88°
12'	--	86°	86°
15'	--	86°	86°
18'	--	--	86°

Transect E	3	2	1
0'	97°	97°	96°
3'	96°	97°	96°
6'	91°	92°	93°
9'	--	88°	86°
12'	--	--	85°

Station F		
	0'	88°
	3'	86°
	6'	85°
	9'	82°

Station G		
	0'	78°
	3'	78°
	6'	78°

Station H		
	0'	82'
	3'	82'
	6'	82'

Station I		
	0'	73°
	3'	73°
	6'	73°
	9'	73°

Station J		
	0'	73°
	3'	73°
	6'	73°

Station K		
	0'	81'
	3'	81'
	6'	81'

H. B. ROBINSON WATER TEMPERTURE PROFILE
October 16, 1974

Transect A	3	2	1
0'	71°	72°	72°
3'	72°	72°	72°
6'	72°	72°	72°
9'	72°	72°	72°
12'	72°	72°	--
15'	72°	72°	--
18'	72°	72°	--
21'	72°	72°	--
24'	--	71°	--
27'	--	71°	--
30'	--	70°	--

Transect B	3	2	1
0'	73°	72°	72°
3'	73°	73°	73°
6'	73°	73°	73°
9'	73°	73°	73°
12'	73°	73°	73°
15'	73°	73°	73°
18'	73°	73°	73°
21'	73°	72°	72°
24'	72°	72°	72°
27'	71°	70°	71°
30'	71°	70°	70°
33'	--	--	70°

Transect C	3	2	1
0'	73°	73°	73°
3'	73°	73°	73°
6'	73°	73°	73°
9'	73°	73°	--
12'	73°	73°	--
15'	73°	73°	--
18'	73°	73°	--
21'	72°	73°	--
24'	72°	71°	--

Transect CA	3	2	1
0'	75°	76°	74°
3'	75°	76°	75°
6'	75°	76°	75°
9'	74°	76°	75°
12'	--	76°	75°
15'	--	73°	73°
18'	--	72°	73°
21'	--	72°	71°

Transect D	3	2	1
0'	77°	79°	80°
3'	77°	79°	80°
6'	77°	79°	80°
9'	--	79°	79°
12'	--	--	77°
15'	--	--	73°
18'	--	--	72°

Transect E	3	2	1
0'	86°	85°	85°
3'	87°	86°	86°
6'	87°	85°	85°
9'	87°	--	82°
12'	87°	--	--

Station F	0'	81°	Station G	0'	73°	Station H	0'	72°
	3'	81°		3'	73°		3'	72°
	6'	76°		6'	69°			
Station I*	0'	63°	Station J	0'	64°	Station K*	0'	68°
	3'	63°		3'	64°		3'	68°
	6'	63°					6'	68°

October 17, 1974

H. B. ROBINSON WATER TEMPERATURE PROFILE
November 13, 1974

Transect A	3	2	1
0'	65°	67°	66°
3'	65°	67°	66°
6'	66°	67°	66°
9'	66°	67°	66°
12'	66°	67°	66°
15'	66°	68°	--
18'	66°	68°	--
21'	66°	68°	--
24'	--	68°	--
27'	--	67°	--
30'	--	67°	--
33'	--	67°	--

Transect B	3	2	1
0'	67°	67°	67°
3'	67°	68°	67°
6'	67°	68°	68°
9'	67°	67°	68°
12'	67°	67°	68°
15'	67°	67°	67°
18'	67°	67°	67°
21'	67°	67°	67°
24'	67°	67°	67°
27'	--	67°	67°
30'	--	67°	67°
33'	--	--	67°

Transect C	3	2	1
0'	67°	68°	68°
3'	68°	68°	68°
6'	68°	68°	68°
9'	68°	68°	--
12'	68°	68°	--
18'	68°	68°	--
21'	67°	68°	--
24'	67°	68°	--

Transect CA	3	2	1
0'	70°	70°	70°
3'	70°	71°	71°
6'	70°	71°	70°
9'	69°	70°	71°
12'	69°	69°	70°
15'	--	68°	70°
18'	--	68°	--
21'	--	68°	--

Transect D	3	2	1
0'	72°	73°	73°
3'	71°	73°	73°
6'	70°	72°	73°
9'	--	72°	70°
12'	--	70°	70°
15'	--	--	68°
18'	--	--	67°

Transect E	3	2	1
0'	82°	81°	78°
3'	83°	78°	77°
6'	83°	74°	75°
9'	--	--	63°

Station F			Station G			Station H*		
	0'	65°		0'	56°		0'	64°
	3'	63°		3'	55°		3'	64°
	6'	59°		6'	54°			

Station I*			Station J			Station K		
	0'	52°		0'	50°		0'	64°
	3'	52°		3'	50°		3'	64°
	6'	52°		6'	50°		6'	64°

* On November 14, 1974

H. B. ROBINSON WATER TEMPERATURE PROFILE
December 11, 1974

Transect A	3	2	1
0'	55°	54°	55°
3'	55°	55°	55°
6'	56°	55°	55°
9'	56°	55°	55°
12'	56°	55°	55°
15'	56°	55°	55°
18'	56°	55°	--
21'	56°	55°	--
24'	56°	55°	--
27'	--	55°	--
30'	--	55°	--

Transect B	3	2	1
0'	57°	56°	56°
3'	57°	57°	56°
6'	57°	57°	56°
9'	57°	57°	56°
12'	57°	57°	56°
15'	57°	57°	56°
18'	57°	56°	56°
21'	56°	56°	56°
24'	56°	56°	56°
27'	56°	56°	56°
30'	56°	56°	56°
33'	--	--	56°

Transect C	3	2	1
0'	57°	56°	56°
3'	57°	57°	55°
6'	57°	57°	55°
9'	57°	57°	--
12'	57°	57°	--
15'	57°	57°	--
18'	56°	57°	--
21'	56°	57°	--
24'	56°	56°	--
27'	--	56°	--

Transect CA	3	2	1
0'	62°	61°	61°
3'	61°	61°	59°
6'	59°	59°	58°
9'	58°	58°	57°
12'	57°	57°	57°
15'	56°	57°	57°
18'	--	56°	--
21'	--	55°	--

Transect D	3	2	1
0'	65°	64°	65°
3'	64°	64°	65°
6'	64°	60°	60°
9'	--	58°	59°
12'	--	57°	58°
15'	--	--	55°
18'	--	--	54°

Transect E	3	2	1
0'	71°	70°	69°
3'	72°	68°	70°
6'	73°	64°	67°
9'	--	--	53°
12'	--	--	52°

Station F	
0'	59°
3'	48°
6'	47°

Station G	
0'	44°
3'	44°
6'	44°

Station H	
0'	57°
3'	57°
6'	57°

Station I	
0'	55°
3'	55°
6'	55°
9'	46°

Station K	
0'	57°
3'	57°
6'	57°

H. B. ROBINSON WATER TEMPERATURE PROFILE
January 16, 1975

Transect A	3	2	1
0'	57°	57°	55°
3'	57°	57°	55°
6'	57°	57°	57°
9'	58°	57°	55°
12'	58°	57°	–
15'	58°	57°	–
18'	58°	57°	–
21'	57°	57°	–
24'	58°	57°	–
27'	–	57°	–
30'	–	57°	–
33'	–	57°	–

Transect B	3	2	1
0'	59°	57°	57°
3'	59°	59°	58°
6'	59°	59°	58°
9'	59°	59°	58°
12'	59°	59°	58°
15'	59°	59°	58°
18'	59°	59°	58°
21'	59°	59°	58°
24'	58°	59°	58°
27'	58°	59	58°
30'	58°	59°	58°
33'	58°	59°	58°

Transect C	3	2	1
0'	59°	59°	59°
3'	60°	59°	59°
6'	60°	59°	59°
9'	60°	59°	59°
12'	59°	59°	–
15'	59°	–	–
18'	59°	–	–
21'	59°	–	–
24'	59°	–	–
27'	59°	–	–

Transect CA	3	2	1
0'	61°	61°	61°
3'	61°	61°	61°
6'	61°	61°	61°
9'	61°	61°	61°
12'	61°	61°	61°
15'	60°	60°	60°
18'	60°	60°	60°
21'	–	59°	59°
24'	–	59°	59°

Transect D	3	2	1
0'	64°	65°	64°
3'	64°	65°	65°
6'	64°	64°	64°
9'	64°	64°	63°
12'	–	63°	62°
15'	–	–	56°
18'	–	–	56°
21'	–	–	56°

Transect E	3	2	1
0'	68°	70°	72°
3'	68°	70°	73°
6'	68°	68°	71°
9'	55°	–	59°
12'	–	–	54°
15'	–	–	52°

Point F	
0'	60°
3'	50°
6'	48°
9'	46°

Point G	
0'	45°
3'	45°
6'	44°
9'	44°
12'	44°

Point H	
0'	58°
3'	58°
6'	59°
9	59°

Point I	
0'	48°
3'	47°
6'	47°
9'	47°

Point K	
0'	57°
3'	57°
6'	57°

H. B. ROBINSON WATER TEMPERATURE PROFILE
February 5, 1975

Transect A	3	2	1
0'	57°	57°	57°
3'	57°	57°	57°
6'	57°	57°	57°
9'	57°	57°	57°
12'	57°	57°	57°
15'	57°	57°	57°
18'	57°	57°	--
21'	57°	57°	--
24'	--	57°	--
27'	--	57°	--
30'	--	57°	--

Transect B	3	2	1
0'	57°	56°	56°
3'	57°	57°	56°
6'	57°	57°	56°
9'	57°	57°	56°
12'	57°	57°	56°
15'	57°	57°	56°
18'	57°	57°	56°
21'	57°	57°	56°
24'	57°	57°	56°
27	57°	57°	56°
30'	57°	57°	56°

Transect C	3	2	1
0'	58°	58°	58°
3'	58°	58°	58°
6'	58°	58°	57°
9'	58°	58°	--
12'	58°	57°	--
15'	58°	57°	--
18'	58°	57°	--
21'	57°	57°	--
24'	57°	57°	--

Transect CA	3	2	1
0'	59°	59°	57°
3'	59°	59°	57°
6'	59°	58°	57°
9'	59°	57°	56°
12'	58°	57°	55°
15'	--	57°	55°
18'	--	57°	55°
21'	--	57°	55°
24'	--	57°	55°

Transect D	3	2	1
0'	57°	58°	59°
3'	60°	59°	59°
6'	60°	59°	59°
9'	58°	59°	58°
12'	--	59°	57°
15'	--	--	57°
18'	--	--	55°

Transect E	3	2	1
0'	68°	59°	64°
3'	68°	64°	65°
6'	64°	61°	65°
9'	--	--	50°
12'	--	--	50°

Station F	
0'	49°
3'	45°
6'	45°

Station G	
0'	43°
3'	43°
6'	43°
9'	43°

Station H	
0'	55°
3'	56°

Station I*	
0'	46°
3'	46°
6'	46°

Station K	
0'	55°
3'	55°
6'	55°
9'	56°

* Sampled February 6, 1975

H. B. ROBINSON WATER TEMPERATURE PROFILE
March 5, 1975

Transect A	3	2	1
0'	61°	59°	58°
3'	60°	58°	58°
6'	59°	58°	57°
9'	58°	57°	57°
12'	58°	57°	57°
15'	57°	57°	57°
18'	57°	57°	57°
21'	57°	57°	57°
24'	--	57°	--
27'	--	56°	--
30'	--	56°	--
33'	--	56°	--

Transect B	3	2	1
0'	61°	60°	58°
3'	60°	59°	59°
6'	59°	58°	57°
9'	58°	58°	57°
12'	57°	57°	57°
15'	57°	57°	57°
18'	57°	57°	56°
21'	57°	57°	56°
24'	57°	57°	56°
27'	57°	57°	56°
30'	57°	57°	56°
33'	57°	57°	56°
36'	--	--	56°

Transect C	3	2	1
0'	64°	62°	62°
3'	63°	60°	61°
6'	61°	59°	59°
9'	59°	59°	--
12'	59°	58°	--
15'	59°	58°	--
18'	58°	--	--
21'	57°	--	--
24'	57°	--	--

Transect CA	3	2	1
0'	66°	65°	63°
3'	64°	64°	63°
6'	61°	61°	61°
9'	59°	60°	60°
12'	--	59°	59°
15'	--	59°	--
18'	--	58°	--
21'	--	57°	--
24'	--	57°	--

Transect D	3	2	1
0'	67°	67°	68°
3'	64°	64°	65°
6'	61°	63°	62°
9'	--	60°	61°
12'	--	--	60°
15'	--	--	58°
18'	--	--	55°

Transect E	3	2	1
0'	73°	71°	70°
3'	73°	71°	70°
6'	73°	67°	66°
9'	--	--	53°
12'	--	--	52°

Station F	
0'	59°
3'	55°
6'	47°
9'	46°
12'	46°

Station G	
0'	54°
3'	48°
6'	47°

Station H*	
0'	55°
3'	56°
6'	57°

Station I*	
0'	53°
3'	51°
6'	50°
9'	50°

Station K*	
0'	60°
3'	59°
6'	59°
9'	59°

*March 6, 1975

H. B. ROBINSON WATER TEMPERATURE PROFILE
March 20, 1975

Transect A	3	2	1
0'	63°	63°	63°
3'	63°	63°	63°
6'	63°	63°	63°
9'	62°	62°	--
12'	62°	62°	--
15'	62°	62°	--
18'	62°	62°	--
21'	--	62°	--
24'	--	62°	--
27'	--	62°	--
30'	--	61°	--
33'	--	61°	--
36'	--	61°	--

Transect B	3	2	1
0'	63°	64°	62°
3'	63°	62°	62°
6'	63°	62°	62°
9'	62°	62°	62°
12'	62°	62°	62°
15'	62°	62°	62°
18'	62°	62°	62°
21'	62°	62°	61°
24'	62°	62°	61°
27'	62°	62°	61°
30'	62°	61°	61°
33'	62°	61°	61°

Transect C	3	2	1
0'	64°	64°	64°
3'	64°	64°	64°
6'	64°	64°	63°
9'	63°	64°	--
12'	63°	64°	--
15'	62°	62°	--
18'	61°	62°	--
21'	61°	61°	--
24'	61°	--	--
27'	61°	--	--

Transect CA	3	2	1
0'	66°	66°	66°
3'	65°	66°	66°
6'	64°	66°	66°
9'	63°	63°	63°
12'	--	63°	62°
15'	--	62°	62°
18'	--	62°	--
21'	--	62°	--
24'	--	62°	--

Transect D	3	2	1
0'	68°	68°	68°
3'	68°	68°	68°
6'	68°	68°	68°
9'	--	67°	67°
12'	--	65°	65°
15'	--	64°	64°
18'	--	63°	63°

Transect E	3	2	1
0'	73°	73°	73°
3'	73°	72°	73°
6'	74°	73°	68°
9'	--	60°	58°
12'	--	--	57°

Station F	
0'	58°
3'	57°
6'	57°
9'	57°

Station G	
0'	57°
3'	58°
6'	57°

Station H	
0'	64°
3'	64°
6'	64°

Station I	
0'	60°
3'	60°
6'	60°
9'	60°

H. B. ROBINSON WATER TEMPERATURE PROFILE
April 10, 1975

Transect A	3	2	1
0'	61°	62°	62°
3'	61°	62°	62°
6'	61°	62°	62°
9'	61°	61°	62°
12'	61°	61°	62°
15'	61°	61°	61°
18'	61°	61°	-
21'	61°	61°	-
24'	61°	61°	-
27'	-	61°	-
30'	-	61°	-
33'	-	60°	-

Transect B	3	2	1
0'	61°	62°	62°
3'	62°	62°	62°
6'	62°	62°	62°
9'	62°	62°	62°
12'	62°	62°	62°
15'	61°	62°	62°
18'	61°	61°	61°
21'	61°	61°	61°
24'	61°	61°	61°
27'	61°	61°	61°
30'	61°	61°	61°
33'	61°	60°	60°

Transect C	3	2	1
0'	63°	63°	63°
3'	63°	63°	63°
6'	63°	63°	63°
9'	63°	63°	63°
12'	63°	63°	-
15'	63°	62°	-
18'	62°	61°	-
21'	61°	61°	-
24'	61°	60°	-

Transect CA	3	2	1
0'	64°	64°	64°
3'	64°	64°	64°
6'	64°	64°	64°
9'	64°	64°	64°
12'	-	64°	64°
15'	-	64°	64°
18'	-	60°	-
21'	-	59°	-
24'	-	59°	-

Transect D	3	2	1
0'	68°	69°	69°
3'	68°	69°	69°
6'	68°	67°	69°
9'	-	66°	66°
12'	-	-	64°
15'	-	-	59°
18'	-	-	59°

Transect E	3	2	1
0'	74°	73°	73°
3'	74°	74°	73°
6'	72°	74°	73°
9'	-	-	61°
12'	-	-	61°

Station F		Station G		Station H	
0'	68°	0'	62°	0'	62°
3'	68°	3'	59°	3'	62°
6'	60°	6'	57°	6'	62°
9'	58°				

Station I		Station K	
0'	61°	0'	63°
3'	60°	3'	63°
6'	60°	6'	63°
9'	60°	9'	63°

THERMAL PLUME MONITORING
H. B. ROBINSON STEAM ELECTRIC PLANT

April 10, 1975

ıpling tion	Surface °C	Surface °F	3' °C	3' °F	6' °C	6' °F	9' °C	9' °F	12' °C	12' °F	15' °C	15' °F
1	22.0	72	22.0	72	22.0	72	19.0	66				
2	22.5	72	22.0	72	21.0	70	19.5	67	16.0	61		
3	23.0	73	22.0	72	20.5	69	20.0	68	16.0	61		
4	22.5	72	21.0	70	20.0	68						
5	22.5	72	22.5	72	22.5	72	19.0	66				
6	22.5	72	22.5	73	21.5	71	18.5	65	15.5	60		
7	23.0	73	23.5	74	22.0	72	18.5	65	15.5	60		
9	22.0	72	23.0	72	20.5	69						
0	22.0	72	22.0	72	21.0	70	18.0	64	15.5	60		
1	22.0	72	22.0	72	22.0	72	17.0	63	15.5	60		
2	23.0	73	23.0	73	23.0	73	18.0	64	15.0	59		
3	22.5	72	23.0	73	23.0	73	16.0	61	15.5	60		
4	24.0	75	22.5	72	20.0	69						
5	22.5	72	22.5	73	21.5	71	20.0	68				
6	23.0	73	23.5	74	23.5	74	18.0	64	16.0	61		
7	23.0	73	23.0	73	23.0	73	17.0	63	15.5	60		
8	23.0	73	23.0	73	23.0	73	17.0	63	15.0	59		
9	23.0	73	23.5	74								
0	23.0	73	23.5	74								
1	23.0	73	23.0	73	23.0	73	16.5	62	15.5	60	15.0	59
2	23.0	73	23.0	73	23.0	73	16.0	61	16.0	61		
3	23.0	73	23.0	73	23.0	73	16.0	63	16.0	61		
4	22.5	72										
5	23.0	73	23.5	74								
6	23.0	73	23.5	74	23.0	73	16.0	61	16.0	61		
7	22.5	72	23.0	73	23.0	73	16.5	62	16.0	61		
.8	23.0	73	23.0	73								
9	22.0	72	22.5	72								
·0	22.0	72	22.5	72	22.5	72	16.0	61	15.5	60		
·1	22.0	72	22.5	72	16.0	61	15.5	60				
·2	20.5	69										
·3	22.0	72	22.0	72	15.5	60	15.0	59				
·4	22.0	72	22.0	72	16.0	72						

H. B. ROBINSON WATER TEMPERATURE PROFILE
May 12, 1975

Transect A	3	2	1
0'	75°	75°	77°
3'	73°	73°	75°
7'	73°	73°	73°
10'	73°	72°	73°
13'	72°	72°	72°
16'	72°	72°	72°
20'	72°	72°	72°
23'	72°	72°	-
26'	71°	71°	-
30'	-	71°	-
33'	-	71°	-
36'	-	71°	-
39'			

Transect B	3	2	1
0'	76°	77°	77°
3'	76°	76°	77°
7'	73°	74°	73°
10'	73°	73°	73°
13'	73°	73°	73°
16'	72°	72°	72°
20'	72°	72°	72°
23'	72°	72°	72°
26'	72°	72°	72°
30'	71°	71°	71°
33'	71°	71°	71°
36'	-	71°	70°
39'	-	-	70°

Transect C	3	2	1
0'	78°	77°	77°
3'	77°	77°	76°
7'	74°	75°	76°
10'	74°	73°	-
13'	73°	72°	-
16'	72°	72°	-
20'	70°	71°	-
23'	70°	70°	-
26'	70°	70°	-

Transect CA	3	2	1
0'	77°	77°	77°
3'	77°	77°	77°
7'	77°	77°	76°
10'	75°	73°	73°
13'	-	-	73°
16'	-	-	72°
20'	-	-	70°
23'	-	-	70°

Transect D	3	2	1
0'	78°	77°	77°
3'	78°	77°	77°
7'	77°	77°	77°
10'	-	75°	73°
13'	-	-	72°
16'	-	-	69°
20'	-	-	69°

Transect E	3	2	1
0'	77°	79°	77°
3'	77°	77°	77°
7'	77°	78°	77°
10'	77°	-	68°
13'	77°	-	67°
16'	77°	-	-

Station F	
0'	77°
3'	77°
7'	67°
10'	67°

Station G	
0'	77°
3'	66°
7'	64°

Station H	
0'	72°
3'	72°
7'	72°

Station I	
0'	68°

Station K	
0'	73°
3'	73°
7'	73°
9'	73°

*Temperatures were recorded at meter intervals.

H. B. ROBINSON WATER TEMPERATURE PROFILE
May 22, 1975

Transect A	3	2	1
0'	80°	81°	80°
3'	78°	79°	80°
6'	77°	78°	79°
9'	77°	78°	77°
12'	76°	77°	77°
15'	76°	76°	77°
18'	75°	76°	-
21'	74°	74°	-
24'	-	74°	-
27'	-	73°	-
30'	-	73°	-
33'	-	73°	-
36'	-	71°	-
39'	-	71°	-

Transect B	3	2	1
0'	82°	81°	82°
3'	79°	80°	81°
6'	77°	77°	77°
9'	77°	77°	77°
12'	76°	77°	77°
15'	76°	76°	77°
18'	75°	75°	75°
21'	74°	75°	75°
24'	74°	73°	74°
27'	73°	73°	73°
30'	71°	71°	71°
33'	71°	71°	71°

Transect C	3	2	1
0'	82°	82°	82°
3'	82°	82°	81°
6'	79°	80°	80°
9'	78°	78°	-
12'	77°	77°	-
15'	76°	76°	-
18'	75°	75°	-
21'	74°	74°	-
24'	73°	74°	-
27'	72°	-	-

Transect CA	3	2	1
0'	83°	84°	84°
3'	82°	82°	82°
6'	81°	81°	81°
9'	79°	79°	79°
12'	77°	77°	77°
15'	76°	76°	77°
18'	74°	74°	75°
21'	73°	74°	-
24'	73°	73°	-

Transect D	3	2	1
0'	85°	84°	84°
3'	82°	82°	82°
6'	81°	81°	82°
9'	81°	80°	80°
12'	-	77°	76°
15'	-	-	73°
18'	-	-	73°

Transect E	3	2	1
0'	82°	85°	86°
3'	82°	85°	86°
6'	82°	82°	81°
9'	82°	-	74°
12'	82°	-	73°

Point F		
	0'	85°
	3'	79°
	6'	79°

Point G		
	0'	85°
	3'	84°
	6'	73°

Point H		
	0'	79°
	3'	78°
	6'	78°

Point I		
	0'	78°
	3'	79°
	6'	79°

Point K		
	0'	73°
	3'	73°
	6'	73°
	9'	72°

THERMAL PLUME MONITORING
H. B. ROBINSON STEAM ELECTRIC PLANT

May 22, 1975

Sampling Station	Surface		3'		6'		9'		12'		15'	
	°C	°F	°C	°F	°C	°F	°C	°F	°C	°F	°C	°F
1	28.5	83	27.5	82	27.0	81	26.0	79	25.5	78		
2	29.0	84	29.0	84	27.8	82	26.5	80	24.0	75	23.0	73
3	30.5	87	30.5	87	28.0	82	27.5	82	23.0	73		
4	30.5	87	30.5	87	29.5	85	27.0	81	25.5	78		
5	28.5	83	27.8	82	26.5	80	26.0	79				
6	29.0	84	29.0	84	28.0	82	26.2	79	23.2	74		
7	30.5	87	29.5	85	27.5	82	26.2	79	23.5	74		
9	29.5	85	29.0	84	26.5	80						
10	29.5	85	28.0	82	28.0	82	25.5	78				
11	29.5	85	29.0	84	27.2	81	26.0	79	23.0	73		
12	29.8	86	29.5	85	27.8	82	26.2	79	22.5	72		
13	30.0	86	30.0	86	30.0	86	26.2	79	22.5	72		
14	28.2	83	28.0	82	27.5	82						
15	30.0	86	29.2	85	28.0	82	28.0	82				
16	29.2	85	29.2	85	28.0	82						
17	29.5	85	29.5	85	27.5	82	24.5	76	22.5	72		
18	30.0	86	30.2	86	27.5	82	25.0	77	22.5	72		
19	29.5	85	28.0	82								
20	30.5	87	28.8	84								
21	30.0	86	28.8	84	28.0	82	24.0	75	23.0	73		
22	29.8	86	30.0	86	27.8	82	23.2	74	22.8	73		
23	30.5	87	31.0	88	27.0	81	24.8	77	23.2	74		
24	31.0	88										
25	30.0	86	30.2	86								
26	30.0	86	29.8	85	27.5	82	24.0	75	22.5	72		
27	30.2	86	30.0	86	22.2	72	23.2	74	22.5	72		
28	30.8	87	30.8	87	28.5	83						
29	30.0	86	29.0	84								
30	30.0	86	30.0	86	27.8	82	22.8	73	22.5	72		
31	30.5	87	30.5	87	27.5	82	24.2	76	23.0	73		
32	30.2	86										
33	30.0	86	30.0	86	27.2	81	23.0	73	22.8	73		
34	31.5	89	31.5	89	27.5	82	25.0	77	24.0	75		

H. B. ROBINSON WATER TEMPERATURE PROFILE
June 10, 1975

Transect A	3	2	1
0'	81°	81°	81°
3'	82°	81°	81°
6'	82°	81°	81°
9'	82°	81°	81°
12'	82°	81°	81°
15'	82°	81°	81°
18'	82°	81°	-
21'	82°	82°	-
24'	82°	82°	-
27'	-	82°	-

Transect B	3	2	1
0'	82°	82°	81°
3'	82°	82°	82°
6'	82°	82°	82°
9'	82°	82°	82°
12'	82°	82°	82°
15'	82°	82°	82°
18'	82°	82°	82°
21'	82°	82°	82°
24'	82°	82°	81°
27'	82°	82°	81°
30'	-	80°	81°
33'	-	79°	79°

Transect C	3	2	1
0'	86°	82°	81°
3'	86°	82°	81°
6'	86°	82°	81°
9'	85°	82°	-
12'	83°	82°	-
15'	82°	82°	-
18'	80°	82°	-
21'	82°	82°	-
24'	81°	81°	-
27'	81°	81°	-

Transect CA	3	2	1
0'	83°	82°	82°
3'	83°	82°	82°
6'	83°	82°	82°
9'	83°	82°	82°
12'	-	82°	82°
15'	-	82°	80°
18'	-	82°	-
21'	-	82°	-
24'	-	82°	-
27'	-	81°	-

Transect D	3	2	1
0'	86°	85°	85°
3'	86°	85°	85°
6'	82°	82°	82°
9'	80°	82°	82°
12'	81°	82°	82°
15'	-	82°	81°
18'	-	81°	81°
21'	-	82°	81°

Transect E	3	2	1
0'	99°	96°	95°
3'	99°	96°	95°
6'	99°	91°	91°
9'	99°	-	82°
12'	99°	-	81°
15'	99°	-	-

Station F		
	0'	86°
	3'	85°
	6'	82°
	9'	80°

Station G		
	0'	75°
	3'	75°
	6'	74°

Station H		
	0'	81°
	3'	81°

Station I		
	0'	70°

Station K		
	0'	81°
	3'	81°
	6'	81°

THERMAL PLUME MONITORING
H. B. ROBINSON STEAM ELECTRIC PLANT

June 10, 1975

Sampling Station	Surface °C	Surface °F	3' °C	3' °F	6' °C	6' °F	9' °C	9' °F	12' °C	12' °F	15' °C	15' °F
1	33.8	93	33.8	93	33.5	92	28.0	82				
2	34.5	94	34.5	94	30.2	86	27.8	82	27.0	81		
3	33.2	92	33.0	91	28.8	84	28.0	82	27.0	81		
4	32.0	90	31.8	89	28.5	83	28.0	82				
5	33.2	92	33.2	92	31.0	88	28.5	83				
6	34.8	95	34.8	95	34.0	93	28.0	82	27.0	81		
7	35.0	95	34.0	93	30.0	86	28.0	82	26.8	80		
9	33.0	91	33.0	91	32.8	91						
10	34.2	94	33.0	91	31.0	88	28.0	82				
11	35.5	96	33.8	93	32.0	90	27.5	81	27.0	81		
12	34.8	95	34.5	94	32.0	90	27.0	81	26.2	79		
13	33.2	92	33.2	92	32.0	90	28.0	82	26.5	80		
14	36.5	98	36.5	98	36.8	98						
15	36.0	97	35.2	95	34.0	93	28.0	82				
16	35.5	96	35.8	96	32.8	91						
17	34.0	93	34.0	93	32.5	90	28.0	82	26.0	79		
18	34.5	94	33.5	92	32.0	90	28.0	82	26.0	79		
19	35.5	96	35.5	96								
20	36.0	97	36.2	97								
21	35.5	96	35.8	96	32.2	90	28.2	83	26.2	79		
22	34.0	93	34.0	93	32.8	91	27.5	81	26.0	79		
23	34.0	93	33.8	93	32.2	90	28.5	83				
24	31.2	88										
25	35.0	90	35.0	95								
26	35.5	96	35.2	95	32.0	90	28.0	82	27.0	81		
27	35.0	90	35.0	95	33.0	92	27.5	81	27.0	81		
28	34.5	94	34.5	94	34.2	94						
29	34.0	93	34.0	93								
30	34.2	94	34.2	94	32.5	90	27.5	81	27.2	81		
31	34.5	94	34.5	94	33.0	92	28.2	83	27.5	81		
32	32.0	90										
33	34.0	93	34.0	93	32.5	90	28.0	82	27.0	81		
34	33.5	92	33.2	92	32.8	91	27.0	81				
Discharge	37.0	99	37.0	99	37.0	99	37.0	99	37.0	99	37.0	99

H. B. ROBINSON WATER TEMPERATURE PROFILE
July 1, 1975

Transect A	3	2	1
0'	88°	88°	88°
3'	88°	88°	88°
6'	88°	88°	88°
9'	88°	88°	87°
12'	88°	88°	87°
15'	88°	88°	-
18'	88°	88°	-
21'	87°	88°	-
24'	87°	88°	-
27'	-	87°	-
30'	-	87°	-
33'	-	87°	-
36'	-	85°	-
39'	-	84°	-

Transect B	3	2	1
0'	89°	89°	88°
3'	89°	89°	89°
6'	88°	88°	88°
9'	88°	88°	88°
12'	88°	88°	88°
15'	88°	88°	88°
18'	87°	88°	88°
21'	87°	87°	88°
24'	87°	87°	87°
27'	87°	87°	87°
30'	86°	86°	86°
33'	-	85°	85°

Transect C	3	2	1
0'	89°	88°	87°
3'	89°	88°	87°
6'	89°	88°	87°
9'	88°	88°	-
12'	88°	88°	-
15'	88°	88°	-
18'	87°	87°	-
21'	87°	87°	-
24'	84°	-	-
27'	84°	-	-

Transect CA	3	2	1
0'	91°	91°	90°
3'	91°	91°	90°
6'	91°	90°	87°
9'	89°	88°	87°
12'	-	87°	87°
15'	-	86°	86°
18'	-	85°	-
21'	-	84°	-
27'	-	83°	-

Transect D	3	2	1
0'	93°	93°	92°
3'	94°	93°	92°
6'	90°	88°	89°
9'	-	86°	87°
12'	-	86°	86°
18'	-	85°	85°
21'	-	-	83°

Transect E	3	2	1
0'	105°	102°	102°
3'	106°	101°	89°
6'	106°	96°	90°
9'	-	85°	86°
12'	-	84°	83°

Station F		
	0'	93°
	3'	91°
	6'	85°
	9'	82°

Station G		
	0'	82°
	3'	82°
	6'	75°

Station H		
	0'	89°
	3'	89°

Station I		
	0'	74°
	3'	73°
	6'	73°

Station K		
	0'	80°
	3'	80°
	6'	80°

THERMAL PLUME MONITORING
H. B. ROBINSON STEAM ELECTRIC PLANT

July 1, 1975

Sampling Station	Surface °C	Surface °F	3' °C	3' °F	6' °C	6' °F	9' °C	9' °F	12' °C	12' °F	15' °C	15' °F
1	36.6	98	37.0	99	31.5	89	30.2	86				
2	38.2	101	33.2	92	30.6	87	30.0	86	28.8	84		
3	38.0	100	33.4	92	30.6	87	30.0	86	28.5	84	28.0	82
4	35.8	96	32.0	90	30.5	87	30.1	86	29.5	85		
5	37.0	99	36.0	97	30.7	87	30.0	86				
6	37.2	99	35.5	96	32.0	90	29.8	86	29.0	84		
7	38.0	100	37.0	99	32.0	90	30.0	86	28.6	83		
9	38.0	100	36.6	98	30.2	86						
10	37.5	99	35.5	96	30.5	87	29.6	85				
11	38.5	101	36.5	98	31.5	89	30.0	86	28.5	83		
12	38.0	100	38.0	100	31.0	88	30.0	86	28.5	83		
13	38.5	96	38.5	101	31.6	89	29.2	84	28.5	83		
14	40.4	105	40.5	105	40.5	105						
15	40.0	104	38.5	101	31.6	89	31.0	88				
16	39.0	102	38.2	101	35.5	96	29.5	85	29.0	84		
17	39.2	103	39.0	102	34.5	94	30.0	86	28.7	84		
18	38.5	101	38.8	102	31.8	89	29.0	84	28.0	82		
19	40.0	104	40.0	104								
20	39.5	103	39.5	103								
21	39.0	102	39.5	103	34.5	94	29.5	85	28.0	82		
22	39.0	102	31.5	89	33.0	92	30.0	86	28.2	82		
23	38.5	101	38.6	101	33.2	92	29.5	85	28.0	82		
24	37.6	100										
25	39.0	102										
26	39.0	102	39.0	102	33.5	92	29.5	85				
27	38.5	101	37.0	99	33.5	92	29.5	85	28.5	83		
28	37.8	100	38.0	100	31.5	89						
29	38.0	100	37.8	100								
30	39.0	102	38.0	100	33.5	92	29.5	85	29.0	84		
31	38.5	101	37.5	99	31.8	89	29.5	85	28.6	83		
32	38.5	101										
33	39.0	102	38.8	102	34.0	93	29.5	85				
34	38.2	101	36.5	98	34.5	94	29.5	85				
Discharge	40.4	105	41.0	106	41.0	106						

H. B. ROBINSON TEMPERATURE PROFILE
July 29, 1975

Transect A	3	2	1
0'	91°	92°	92°
3'	89°	89°	89°
6'	88°	87°	87°
9'	87°	87°	87°
12'	87°	87°	87°
15'	86°	86°	--
18'	86°	86°	--
21'	82°	83°	--
24'	82°	82°	--
27'	--	82°	--
30'	--	81°	--
33'	--	79°	--

Transect B	3	2	1
0'	92°	91°	89°
3'	89°	89°	88°
6'	87°	87°	88°
9'	87°	87°	87°
12'	87°	86°	86°
15'	86°	86°	86°
18'	86°	86°	86°
21'	83°	83°	84°
24'	82°	82°	82°
27'	81°	82°	81°
30'	80°	79°	80°
33'	79°	77°	78°

Transect C	3	2	1
0'	95°	95°	91°
3'	92°	91°	90°
6'	90°	89°	89°
9'	88°	89°	--
12'	87°	87°	--
15'	85°	87°	--
18'	82°	82°	--
21'	82°	82°	--
24'	81°	82°	--
27'	81°	81°	--

Transect CA	3	2	1
0'	95°	95°	96°
3'	93°	92°	94°
6'	89°	89°	89°
9'	89°	89°	88°
12'	87°	87°	87°
15'	--	85°	87°
18'	--	82°	--
21'	--	81°	--
24'	--	81°	--

Transect D	3	2	1
0'	95°	96°	97°
3'	94°	96°	97°
6'	93°	91°	90°
9'	--	90°	90°
12'	--	87°	89°
15'	--	83°	83°
18'	--	81°	82°
21'	--	81°	--
24'	--	81°	--

Transect E	3	2	1
0'	100°	99°	100°
3'	98°	98°	100°
6'	96°	98°	98°
9'	--	94°	96°

Station F	
0'	91°
3'	90°
6'	81°
9'	79°

Station G	
0'	81°
3'	75°
6'	73°
9'	73°

Station H	
0'	89°
3'	89°
6'	89°

Station I*	
0'	75°
3'	75°
6'	75°
9'	74°
12'	74°

Station K	
0'	86°
3'	86°
6'	86°
9'	86°

*July 30, 1975

THERMAL PLUME MONITORING
H. B. ROBINSON STEAM ELECTRIC PLANT

July 29, 1975

Sampling Station	Surface		3'		6'		9'		12'		15'	
	°C	°F	°C	°F	°C	°F	°C	°F	°C	°F	°C	°F
5	36.0	97	35.5	96	33.5	92	31.5	89				
6	36.0	97	35.5	96	34.5	94	31.5	89	27.0	81	27.0	81
7	36.0	97	36.0	97	34.0	93	31.5	89	27.5	82	27.0	81
14	37.5	100	36.5	98	35.5	96	35.0	95				
15	36.5	98	36.5	98	34.0	93	33.8	93				
16	37.0	99	36.5	98	36.5	98	34.5	94				
17	37.0	99	37.0	99	36.5	98	29.0	84	27.5	82	26.5	80
18	37.0	99	37.0	99	36.5	98	29.5	85	26.5	80		
24	37.5	100										
25	37.5	100	37.5	100								
26	37.5	100	36.5	98	35.5	96	29.5	85	27.5	82	27.5	82
27	37.5	100	36.5	98	36.0	97	30.5	87	27.5	82		
28	37.5	100	37.5	100	36.5	98	35.5	96				
32	37.0	99										
33	36.5	98	36.0	97	35.0	95	27.5	82	27.5	82		
34	37.0	99	36.5	98	35.5	96	29.0	84	28.0	82		

H. B. ROBINSON TEMPERATURE PROFILE
August 5, 1975

Transect A	3	2	1
0'	87°	88°	89°
3'	87°	88°	89°
6'	87°	88°	89°
9'	87°	87°	89°
12'	87°	87°	89°
15'	86°	85°	--
18'	86°	84°	--
21'	84°	83°	--
24'	83°	82°	--
27'	--	82°	--
30'	--	82°	--
33'	--	80°	--

Transect B	3	2	1
0'	89°	88°	89°
3'	89°	89°	89°
6'	89°	89°	89°
9'	89°	89°	89°
12'	89°	89°	89°
15'	88°	87°	88°
18'	86°	86°	87°
21'	84°	85°	84°
24'	83°	83°	82°
27'	82°	82°	82°
30'	82°	82°	81°
33'	--	81°	81°

Transect C	3	2	1
0'	91°	90°	91°
3'	91°	91°	91°
6'	91°	91°	91°
9'	90°	90°	--
12'	89°	90°	--
15'	88°	89°	--
18'	86°	87°	--
21'	84°	85°	--
24'	83°	83°	--
27'	--	82°	--

Transect CA	3	2	1
0'	91°	91°	92°
3'	91°	91°	92°
6'	91°	91°	92°
9'	91°	92°	92°
12'	91°	91°	92°
15'	--	90°	--
18'	--	89°	--
21'	--	84°	--
24'	--	84°	--

Transect D	3	2	1
0'	94°	94°	95°
3'	94°	95°	95°
6'	94°	95°	95°
9'	--	94°	94°
12'	--	--	93°
15'	--	--	91°
18'	--	--	86°

Transect E	3	2	1
0'	103°	99°	100°
3'	103°	99°	100°
6'	104°	99°	99°
9'	103°	92°	89°
12'	103°	86°	86°

Station F	
0'	93°
3'	89°
6'	84°
9'	82°

Station G	
0'	85°
3'	81°
6'	80°

Station H	
0'	87°
3'	87°

Station I*	
0'	78°
3'	78°
6'	77°
9'	77°

Station K	
0'	86°
3'	86°
6'	86°

*August 6, 1975

THERMAL PLUME MONITORING
H. B. ROBINSON STEAM ELECTRIC PLANT

August 5, 1975

Sampling Station	Surface °C	Surface °F	3' °C	3' °F	6' °C	6' °F	9' °C	9' °F	12' °C	12' °F
5	36.0	97	36.0	97	34.5	94	33.5	92	-	-
6	36.5	98	36.5	98	34.5	94	34.0	93	30.0	86
7	37.0	99	37.0	99	35.0	95	33.6	93	30.0	86
14	38.8	102	38.5	101	38.5	101	-	-	-	-
15	38.0	100	37.6	100	35.5	96	34.2	94	-	-
16	37.0	99	37.0	99	37.0	99	33.5	92	30.0	86
17	37.5	100	37.5	100	37.5	100	32.5	91	29.5	85
18	37.0	99	37.0	99	37.0	99	33.0	91	30.0	86
24	38.5	101	-	-	-	-	-	-	-	-
25	39.0	102	-	-	-	-	-	-	-	-
26	38.5	101	38.0	100	36.0	97	32.0	90	29.8	86
27	37.5	100	37.5	100	37.0	99	31.0	88	30.0	86
28	37.5	100	37.5	100	37.5	100	-	-	-	-
32	36.0	97	-	-	-	-	-	-	-	-
33	36.5	98	36.5	98	35.8	96	29.5	85	29.5	85
34	36.0	97	36.5	98	36.5	98	30.5	87	-	-
Discharge	39.5	103	39.6	103	39.8	104	39.6	103	39.6	103
Lower Big Beaverdam Creek	34.5	94	34.5	94	34.5	94				
Middle Big Beaverdam Creek	32.6	91	26.5	80						

H. B. ROBINSON TEMPERATURE PROFILE
August 18, 1975

Transect A	3	2	1
0'	92°	91°	91°
3'	92°	92°	92°
6'	91°	92°	92°
9'	90°	91°	91°
12'	90°	90°	90°
15'	89°	89°	89°
18'	89°	89°	88°
21'	88°	88°	-
24'	-	87°	-
27'	-	84°	-
30'	-	83°	-
33'	-	82°	-
36'	-	82°	-

Transect B	3	2	1
0'	92°	92°	92°
3'	92°	92°	92°
6'	91°	91°	91°
9'	91°	90°	89°
12'	90°	89°	88°
15'	89°	89°	88°
18'	89°	88°	88°
21'	88°	88°	88°
24'	86°	87°	87°
27'	85°	84°	84°
30'	-	83°	83°
33'	-	82°	82°

Transect C	3	2	1
0'	94°	93°	91°
3'	95°	93°	92°
6'	92°	91°	91°
9'	89°	90°	-
12'	89°	89°	-
15'	88°	88°	-
18'	87°	87°	-
21'	85°	84°	-
24'	84°	84°	-
27'	83°	83°	-

Transect CA	3	2	1
0'	94°	93°	93°
3'	95°	94°	91°
6'	91°	91°	90°
9'	-	90°	90°
12'	-	89°	89°
15'	-	88°	-
18'	-	87°	-
21'	-	85°	-
24'	-	84°	-

Transect D	3	2	1
0'	94°	95°	96°
3'	95°	96°	96°
6'	92°	91°	96°
9'	-	88°	89°
12'	-	88°	88°
15'	-	85°	87°
18'	-	84°	84°

Transect DA	3	2	1
0'	97°	95°	95°
3'	98°	95°	94°
6'	93°	92°	91°
9'	89°	89°	89°
12'	-	86°	87°
15'	-	-	83°

Transect E	3	2	1
0'	106°	102°	103°
3'	107°	100°	102°
6'	107°	95°	97°
9'	107°	89°	88°
12'	107°	86°	86°
15'	107°	-	-

Point F	
0'	94°
3'	90°
6'	86°
9'	84°

Point G		Point H		Point I		Point K	
0'	89°	0'	89°	0'	78°	0'	88°
3'	84°	3'	90°	3'	78°	3'	88°
6'	81°			6'	78°		

THERMAL PLUME MONITORING
H. B. ROBINSON STEAM ELECTRIC PLANT

August 18, 1975

Sampling Station	Surface °C	Surface °F	3' °C	3' °F	6' °C	6' °F	9' °C	9' °F	12' °C	12' °F
5	37.5	99	37.5	99	33.5	92	32.0	90		
6	37.5	99	36.8	98	33.3	92	31.5	89	30.5	87
7	37.5	99	37.5	99	33.5	92	31.5	89	29.5	85
14	40.5	105	38.5	101	35.0	95				
15	40.0	104	38.5	101	33.5	92				
16	38.8	102	38.0	100	34.8	95	31.6	89	30.0	86
17	39.0	102	39.0	102	35.8	96	30.6	87	29.2	85
18	39.2	103	39.2	103	36.0	97	32.5	91	28.5	83
24	39.2	103								
25	39.8	104								
26	40.0	104	39.0	102	35.5	96	31.8	89	30.2	86
27	39.5	103	39.0	102	36.0	97	31.0	88	30.2	86
28	39.0	102	39.0	102	36.5	98				
32	38.2	101								
33	38.5	101	37.5	99	36.2	97	30.2	86		
34	38.2	101	37.0	99	36.0	97	30.8	87		
Lower Big Beaverdam Creek	34.0	93	34.5	94	32.5	91	30.2	86		
Middle Big Beaverdam Creek	33.0	91	26.0	79						

H. B. ROBINSON TEMPERATURE PROFILE
September 9, 1975

Transect A	3	2	1
0'	88°	88°	88°
3'	88°	88°	88°
6'	88°	88°	88°
9'	88°	88°	88°
12'	89°	87°	87°
15'	87°	87°	87°
18'	87°	86°	-
21'	86°	86°	-
24'	86°	84°	-
27'	86°	86°	-
30'	85°	85°	-
33'	85°	85°	-
36'	-	84°	-
39'	-	84°	-
42'	-	84°	-

Transect B	3	2	1
0'	87°	88°	87°
3'	87°	88°	88°
6'	87°	88°	88°
9'	87°	88°	88°
12'	87°	87°	87°
15'	86°	87°	87°
18'	86°	87°	87°
21'	86°	86°	86°
24'	85°	86°	86°
27'	84°	85°	85°
30'	-	84°	84°
33'	-	84°	84°

Transect C	3	2	1
0'	89°	88°	89°
3'	89°	88°	88°
6'	88°	88°	88°
9'	88°	88°	-
12'	87°	87°	-
15'	87°	87°	-
18'	87°	-	-
21'	85°	-	-
24'	84°	-	-
27'	83°	-	-

Transect CA	3	2	1
0'	91°	90°	90°
3'	91°	90°	89°
6'	91°	89°	88°
9'	89°	88°	88°
12'	88°	87°	87°
15'	87°	87°	-
18'	86°	86°	-
21'	-	84°	-
24'	-	84°	-

Transect D	3	2	1
0'	95°	95°	94°
3'	93°	94°	94°
6'	91°	89°	90°
9'	-	88°	88°
12'	-	87°	88°
15'	-	86°	87°
18'	-	-	85°

Transect DA	3	2	1
0'	96°	95°	92°
3'	95°	94°	92°
6'	91°	91°	89°
9'	87°	87°	88°
12'	85°	85°	84°

Transect E	3	2	1
0'	104°	102°	100°
3'	104°	99°	99°
6'	104°	95°	90°
9'	-	-	82°
12'	-	-	81°

Station F	
0'	93°
3'	92°
6'	81°
9'	79°

Station G	
0'	89°
3'	81°
6'	77°
9'	76°

Station H	
0'	87°
3'	87°

Station I	
0'	76°
3'	75°
6'	75°
9'	74°

Station K	
0'	86°
3'	86°
6'	86°

THERMAL PLUME MONITORING
H. B. ROBINSON STEAM ELECTRIC PLANT

September 9, 1975

Sampling Station	Surface °C	Surface °F	3' °C	3' °F	6' °C	6' °F	9' °C	9' °F	12' °C	12' °F
5	36.0	97	35.5	96	31.5	89	29.0	84		
6	36.0	97	36.0	97	31.2	88	29.0	84	28.0	82
7	36.5	98	37.0	99	31.0	88	29.2	85	28.0	82
14	38.5	101	37.0	99	35.5	96				
15	39.2	101	37.8	100	32.0	90				
16	39.0	102	37.0	99	35.0	95				
17	37.6	100	37.5	100	32.0	90	28.5	83	28.0	82
18	38.0	100	37.2	99	30.6	87	28.2	83	28.0	82
24	37.5	100								
25	38.0	100								
26	37.5	100	37.0	99	35.0	95	28.0	82	27.2	81
27	37.5	100	37.0	99	32.0	90	27.6	82	27.2	81
28	37.7	100	36.5	98	32.0	90				
32	36.5	98								
33	36.5	98	36.2	97	35.0	95	27.5	82		
34	36.2	97	36.0	97	33.0	91	27.5	82		
Lower Big Beaverdam Creek	32.5	91	32.6	91	31.0	88	30.0	86		
Middle Big Beaverdam Creek	29.5	85	23.0	73						
Upper Big Beaverdam Creek	23.0	73								

H. B. ROBINSON WATER TEMPERATURE PROFILE
September 25, 1975

Transect A	3	2	1
0'	78°	79°	78°
3'	79°	79°	79°
6'	79°	79°	79°
9'	79°	79°	79°
12'	79°	79°	79°
15'	79°	79°	-
18'	79°	79°	-
21'	79°	79°	-
24'	-	79°	-
27'	-	79°	-

Transect B	3	2	1
0'	80°	80°	79°
3'	80°	80°	80°
6'	80°	80°	80°
9'	80°	80°	80°
12'	79°	79°	80°
15'	79°	79°	80°
18'	79°	79°	79°
21'	79°	79°	80°
24'	79°	79°	80°
27'	79°	79°	79°
30'	79°	79°	79°
33'	-	79°	78°

Transect C	3	2	1
0'	82°	83°	82°
3'	83°	82°	82°
6'	82°	82°	81°
9'	80°	82°	-
12'	79°	80°	-
15'	79°	80°	-
18'	79°	80°	-
21'	79°	79°	-
24'	79°	79°	-
27'	79°	79°	-

Transect CA	3	2	1
0'	84°	84°	82°
3'	84°	84°	82°
6'	81°	81°	81°
9'	80°	80°	80°
12'	80°	80°	80°
15'	-	80°	80°
18'	-	80°	-
21'	-	80°	-
24'	-	80°	-

Transect D	3	2	1
0'	85°	85°	85°
3'	84°	85°	85°
6'	82°	81°	81°
9'	-	80°	80°
12'	-	80°	80°
15'	-	80°	79°
18'	-	78°	79°
21'	-	78°	78°

Transect DA	3	2	1
0'	87°	85°	82°
3'	86°	82°	82°
6'	80°	81°	80°
9'	79°	79°	78°
12'	-	77°	77°
15'	-	77°	77°
18'	-	-	77°
21'	-	-	76°

Transect E	3	2	1
0'	92°	90°	89°
3'	93°	90°	89°
6'	93°	80°	77°
9'	93°	76°	75°
12'	93°	-	75°
15'	94°	-	-

Station F	
0'	73°
3'	73°
6'	73°
9'	72°

Station G	
0'	72°
3'	71°
6'	71°
9'	71°
12'	71°

Station H	
0'	78°
3'	79°
6'	79°

Station I	
0'	71°
3'	71°
6'	71°
9'	71°

Station K	
0'	77°
3'	77°
6'	78°
9'	78°

THERMAL PLUME MONITORING
H. B. Robinson Steam Electric Plant September 25, 1975

Sampling Station	Surface °C	Surface °F	'3 °C	'3 °F	6' °C	6' °F	9' °C	9' °F	12' °C	12' °F
5	30.5	87	30.6	87	26.5	80	25.0	77	24.5	7
6	30.5	87	27.5	82	26.5	80	24.5	76	24.5	7
7	32.0	90	30.0	86						
14	32.0	90	30.5	87	26.0	79				
15	31.0	88	31.0	88	27.5	82	25.1	77		
16	32.0	90	32.0	90	26.5	80	24.5	76		
17	32.4	90	32.5	91	25.5	78	25.0	77	24.3	7
18	32.5	91	32.5	91	25.0	77	24.5	76		
24	33.0	91								
25	32.8	91	33.0	91						
26	32.5	91	32.5	91	25.5	78	24.0	75	24.0	7
27	31.5	89	31.5	89	25.0	77	24.0	75	24.0	7
28	31.5	89	31.6	89	27.2	81	25.0	77		
32	30.0	86								
33	30.5	87	30.5	87	24.0	75	23.5	74	23.5	7
34	31.0	88	31.5	89	25.5	78	24.0	75		
Lower Big Beaverdam Creek	27.0	81	27.0	81	26.5	80	25.5	78	25.0	7
Middle Big Beaverdam Creek	26.2	79	26.5	80						

H. B. ROBINSON WATER TEMPERATURE PROFILE
October 13, 1975

Transect A	Intake	3	2	1
0'	80°	81°	82°	82°
3'	80°	81°	82°	81°
6'	80°	81°	80°	79°
9'	80°	79°	79°	79°
12'	79°	79°	79°	79°
15'	78°	79°	76°	-
18'	77°	77°	75°	-
21'	75°	-	75°	-
24'	75°	-	74°	-
27'	73°	-	73°	-
30'	73°	-	73°	-
33'	73°	-	73°	-
36'	73°	-	-	-

Transect B	3	2	1
0'	82°	82°	82°
3'	82°	81°	81°
6'	80°	80°	80°
9'	79°	79°	79°
12'	79°	78°	79°
15'	78°	78°	78°
18'	77°	77°	77°
21'	75°	76°	76°
24'	73°	74°	75°
27'	73°	73°	73°
30'	-	73°	73°
33'	-	73°	73°

Transect C	3	2	1
0'	83°	83°	84°
3'	83°	83°	83°
6'	82°	81°	82°
9'	80°	80°	-
12'	78°	78°	-
15'	77°	77°	-
18'	75°	76°	-
21'	75°	75°	-
24'	73°	74°	-
27'	73°	73°	-

Transect CA	3	2	1
0'	85°	86°	85°
3'	83°	83°	82°
6'	81°	81°	80°
9'	79°	79°	79°
12'	78°	78°	78°
15'	76°	77°	-
18'	-	75°	-
21'	-	73°	-

Transect D	3	2	1
0'	86°	86°	86°
3'	84°	84°	86°
6'	82°	81°	80°
9'	-	79°	79°
12'	-	77°	77°
15'	-	75°	75°

Transect DA	3	2	1
0'	90°	88°	87°
3'	83°	83°	83°
6'	82°	81°	81°
9'	81°	74°	79°
12'	78°	73°	73°
15'	75°	-	73°

Transect E	3	2	1
0'	93°	91°	91°
3'	93°	90°	91°
6'	93°	86°	86°
9'	93°	-	76°
12'	93°	-	73°
15'	93°	-	-

Station F	
0'	85°
3'	78°
6'	71°

Station G	
0'	75°
3'	68°
6'	68°

Station H	
0'	77°
3'	78°
6'	78°

Station I	
0'	65°
3'	65°
6'	65°
9'	65°

Station K	
0'	76°
3'	76°
6'	76°
9'	76°

Unit 2 outlet: 93°
Discharge canal outlet: 93°

THERMAL PLUME MONITORING
H. B. ROBINSON STEAM ELECTRIC PLANT

October 13, 1975

Sampling Station	Surface °C	Surface °F	3' °C	3' °F	6' °C	6' °F	9' °C	9' °F	12' °C	12' °F
5	31.2	88	30.2	86	26.0	79	25.0	77		
6	31.2	88	30.0	86	27.0	81	23.5	74	23.0	73
7	31.6	89	30.5	87	26.6	80	24.0	75	23.0	73
14	33.5	92	32.6	91	32.0	90				
15	32.5	91	32.0	90	27.5	81				
16	32.5	91	32.0	90	30.0	86				
17	32.5	91	32.5	91	27.4	81	23.0	73	23.0	73
18	32.5	91	32.5	91	28.2	83	23.5	74	23.0	73
24	33.9	93								
25	33.5	92	33.8	93						
26	33.6	93	31.2	88	27.8	82	24.0	75		
27	32.8	91	33.0	91	30.0	86	24.2	75	22.6	73
28	32.6	91	32.8	91	31.0					
32	31.5	89								
33	33.0	91	31.8	89	30.5	88	23.5	74	22.5	73
34	33.0	91	33.0	91	27.0	81	24.0	75		
Lower Big Beaverdam Creek	30.5	87	30.0	86	27.0	81	24.0	75	23.5	74
Middle Big Beaverdam Creek	28.5	83	21.0	70						
Upper Big Beaverdam Creek	22.0	72								

H. B. ROBINSON WATER TEMPERATURE PROFILE
October 28, 1975

Transect A	Intake	3	2	1
0'	76°	75°	75°	75°
3'	76°	76°	76°	75°
6'	76°	76°	76°	75°
9'	76°	76°	76°	75°
12'	76°	76°	76°	75°
15'	76°	76°	76°	75°
18'	76°	76°	76°	75°
21'	76°	76°	76°	-
24'	76°	-	76°	-
27'	76°	-	76°	-
30'	76°	-	76°	-
33'	76°	-	76°	-
36'	76°	-	76°	-
39'	76°	-	-	-

Transect B	3	2	1
0'	77°	77°	76°
3'	76°	76°	76°
6'	76°	76°	76°
9'	76°	76°	75°
12'	76°	76°	75°
15'	76°	76°	75°
18'	76°	76°	75°
21'	76°	76°	75°
24'	75°	75°	75°
27'	75°	75°	75°
30'	75°	75°	75°
33'	-	-	74°
36'	-	-	74°

Transect C	3	2	1
0'	77°	76°	75°
3'	77°	77°	75°
6'	77°	77°	75°
9'	76°	76°	-
12'	76°	76°	-
15'	75°	76°	-
18'	75°	75°	-
21'	73°	72°	-
24'	72°	72°	-
27'	72°	72°	-

Transect CA	3	2	1
0'	79°	78°	77°
3'	79°	77°	76°
6'	79°	77°	75°
9'	77°	75°	75°
12'	-	75°	75°
15'	-	74°	75°
18'	-	71°	-
21'	-	70°	-

Transect D	3	2	1
0'	82°	82°	82°
3'	80°	80°	81°
6'	76°	76°	76°
9'	-	75°	75°
12'	-	74°	73°
15'	-	70°	71°
18'	-	-	70°

Transect DA	3	2	1
0'	82°	79°	78°
3'	80°	79°	78°
6'	77°	75°	75°
9'	74°	73°	74°
12'	-	71°	71°
15'	-	69°	69°

Transect E	3	2	1
0'	91°	89°	90°
3'	92°	88°	87°
6'	92°	79°	79°
9'	91°	72°	71°
12'	92°	70°	70°
15'	-	70°	-

Station F	
0'	81°
3'	77°
6'	68°
9'	68°

Satation G	
0'	68°
3'	67°
6'	66°

Station H	
0'	75°
3'	75°

Station I*	
0'	66°
3'	65°
6'	65°
9'	65°

Station K	
0'	74°
3'	74°
6'	74°

Unit 2 discharge 93.2°
End of discharge canal 90.5°

October 28, 1975

THERMAL PLUME MONITORING
H. B. ROBINSON STEAM ELECTRIC PLANT

Sampling Station	Surface °C	Surface °F	3' °C	3' °F	6' °C	6' °F	9' °C	9' °F	12' °C	12' °F	15' °C	15' °F
5	29.0	84	28.8	84	24.0	75	23.5	74				
6	29.2	85	29.0	84	25.0	77	23.5	74				
7	30.0	86	28.0	82	25.0	77	22.8	73	21.2	70		
14	33.0	91	31.8	89								
15	31.5	89	31.2	88	25.5	78						
16	31.5	89	31.0	88	26.2	79	22.0	72	21.2	70	21.0	70
17	30.8	87	30.5	87	24.8	77	21.5	71	21.0	70		
18	30.5	87	30.2	87	26.5	80	21.5	71				
24	32.5	91										
25	32.5	91										
26	32.0	90	29.2	85	26.5	80	21.5	71	21.2	70		
27	32.0	90	30.8	87	26.0	79	21.5	71	21.2	70		
28	31.5	89	31.5	89	24.2	76						
32	30.5	87										
33	31.0	88	31.0	88	28.0	82	21.5	71				
34	30.8	87	30.5	87	28.0	82	21.5	71				
Lower Big Beaverdam Creek	24.8	77	24.5	76	24.2	76	23.5	74				
Middle Big Beaverdam Creek	19.8	68	17.2	63								
Upper Big Beaverdam Creek	18.0	64										

H. B. ROBINSON WATER TEMPERATURE PROFILE
November 12, 1975

Transect A	Intake	3	2	1
0'	71°	71°	71°	71°
3'	71°	71°	71°	71°
6'	71°	71°	71°	71°
9'	70°	71°	71°	71°
12'	70°	71°	71°	71°
15'	70°	70°	71°	71°
18'	70°	70°	71°	70°
21'	70°	-	70°	70°
24'	70°	-	70°	70°
27'	70°	-	70°	-
30'	69°	-	69°	-
33'	69°	-	68°	-
36'	69°	-	68°	-
39'	68°	-	-	-
42'	68°	-	-	-

Transect B	3	2	1
0'	71°	71°	71°
3'	71°	71°	71°
6'	71°	71°	71°
9'	71°	71°	71°
12'	71°	71°	71°
15'	70°	71°	71°
18'	70°	71°	71°
21'	70°	70°	71°
24'	70°	70°	71°
27'	70°	70°	70°
30'	68°	69°	68°
33'	68°	68°	68°

Transect C	3	2	1
0'	72°	72°	72°
3'	71°	72°	71°
6'	71°	72°	71°
9'	71°	72°	-
12'	71°	72°	-
15'	71°	71°	-
18'	70°	70°	-
21'	69°	69°	-
24'	69°	68°	-
27'	-	68°	-

Transect CA	3	2	1
0'	72°	72°	72°
3'	72°	71°	72°
6'	72°	71°	72°
9'	72°	71°	72°
12'	70°	71°	72°
15'	70°	71°	71°
18'	-	69°	70°
21'	-	69°	68°
24'	-	69°	-

Transect D	3	2	1
0'	72°	72°	72°
3'	72°	72°	72°
6'	72°	72°	72°
12'	71°	72°	72°
15'	-	-	69°
18'	-	-	68°

Transect DA	3	2	1
0'	73°	73°	72°
3'	73°	73°	72°
6'	72°	72°	72°
9'	70°	72°	72°
12'	69°	69°	72°
15'	69°	68°	67°

Transect E	3	2	1
0'	75°	74°	73°
3'	75°	73°	73°
6'	76°	72°	73°
9'	76°	69°	70°
12'	76°	-	69°
15'	76°	-	-

Station F	
0'	70°
3'	70°
6'	67°

Station G	
0'	66°
3'	66°
6'	65°

Station H	
0'	70°
3'	70°
6'	70°

Station I	
0'	66°
3'	65°
6'	65°
9'	65°

Station K	
0'	70°
3'	70°
6'	70°

THERMAL PLUME MONITORING
H. B. ROBINSON STEAM ELECTRIC PLANT November 12, 1975

Sampling Station	Surface °C	Surface °F	3' °C	3' °F	6' °C	6' °F	9' °C	9' °F	12' °C	12' °F	15' °C	15' °F
5	22.8	73	22.7	73	22.5	73	21.5	71				
6	22.8	73	22.8	73	22.7	73	21.0	70	20.5	69		
7	23.0	73	23.0	73	23.0	73	21.2	70	20.5	69	20.5	69
14	24.0	75	24.0	75	23.5	74						
15	23.4	74	23.5	74	23.5	74	23.4	74				
16	23.5	74	23.0	73	22.0	72	20.5	69				
17	23.0	73	23.2	74	23.0	73	21.0	70	20.0	68		
18	23.0	73	23.0	73	23.0	73	23.0	73	20.5	69		
*25	24.0	75										
26	23.4	74	23.5	74	23.2	74	21.0	70	20.6	69		
27	23.0	73	23.0	73	23.0	73	21.0	70	20.5	69		
28	23.0	73	23.0	73	23.0	73						
32	23.0	73										
33	22.6	73	22.7	73	22.7	73	20.1	68				
34	22.6	73	22.9	73	22.9	73	20.4	69				
Lower Big Beaverdam Creek	22.5	73	22.5	73	22.2	72	22.0	72	20.5	69		
Middle Big Beaverdam Creek	19.5	67	19.5	67								
Upper Big Beaverdam Creek	19.5	67	19.4	67								

* Station 24 not taken, too shallow

H. B. ROBINSON WATER TEMPERATURE PROFILE
November 25, 1975

Transect A	Intake	3	2	1
0'	56°	56°	56°	56°
3'	56°	57°	56°	56°
6'	56°	57°	56°	56°
9'	56°	56°	56°	56°
12'	56°	56°	56°	56°
15'	56°	56°	56°	-
18'	56°	56°	56°	-
21'	56°	56°	56°	-
24'	56°	56°	56°	-
27'	56°	-	56°	-
30'	56°	-	56°	-
33'	56°	-	56°	-
36'	56°	-	56°	-

Transect B	3	2	1
0'	56°	56°	55°
3'	56°	56°	56°
6'	56°	56°	56°
9'	56°	56°	56°
12'	56°	56°	56°
15'	56°	56°	56°
18'	56°	56°	56°
21'	56°	56°	56°
24'	56°	56°	56°
27'	56°	56°	56°
30'	56°	56°	56°
33'	-	56°	56°

Transect C	3	2	1
0'	55°	55°	56°
3'	56°	56°	56°
6'	56°	56°	56°
9'	56°	56°	-
12'	56°	56°	-
15'	56°	56°	-
18'	56°	56°	-
21'	56°	56°	-
24'	56°	56°	-
27'	56°	56°	-

Transect CA	3	2	1
0'	56°	56°	55°
3'	56°	56°	56°
6'	56°	56°	56°
9'	56°	56°	56°
12'	-	56°	56°
15'	-	56°	-
18'	-	56°	-

Transect D	3	2	1
0'	56°	56°	56°
3'	56°	56°	56°
6'	56°	56°	56°
9'	56°	56°	56°
12'	-	56°	56°
15'	-	56°	56°

Transect DA	3	2	1
0'	56°	55°	55°
3'	56°	56°	55°
6'	56°	56°	55°
9'	55°	56°	55°
12'	-	55°	55°
15'	-	55°	55°

Transect E	3	2	1
0'	59°	58°	57°
3'	60°	58°	57°
6'	60°	54°	57°
9'	-	-	52°
12'	-	-	52°

Station F	
0'	49°
3'	49°
6'	49°
9'	49°

Station G	
0'	48°
3'	48°
6'	48°

Station H	
0'	57°
3'	57°

Station I	
0'	48°
3'	48°
6'	48°
9'	48°

Station K	
0'	56°
3'	56°
6'	56°

THERMAL PLUME MONITORING
H. B. ROBINSON STEAM ELECTRIC PLANT November 25, 1975

Sampling Station	Surface °C	Surface °F	3' °C	3' °F	6' °C	6' °F	9' °C	9' °F	12' °C	12' °F
5	13.4	56	13.5	56	11.6	53	11.6	53		
6	13.5	56	13.7	57	13.5	56	11.0	52		
7	13.5	56	13.8	57	13.6	57	12.8	55	11.0	52
14	14.8	59	14.8	59	14.0	57				
15	14.3	58	14.5	58	14.3	58				
16	14.5	58	14.3	58	12.3	54				
17	14.4	58	14.5	58	14.0	57	11.0	52	11.0	52
18	14.0	57	14.3	58	14.2	58	11.2	52	11.0	52
24	14.8	59								
25	14.6	58								
26	14.5	58	14.5	58	13.0	55	11.0	52		
27	14.0	57	14.0	57	14.0	57	11.0	52	11.0	52
28	13.7	57	14.0	57						
32	13.0	55								
33	13.4	56	13.6	57	12.0	54	10.3	51		
34	13.0	55	13.5	56	13.5	56	10.6	51		
Lower Big Beaverdam Creek	14.0	57	13.0	55	13.0	55	13.5	56	12.0	54
Middle Big Beaverdam Creek	11.0	52	11.0	52						
Upper Big Beaverdam Creek	12.0	54	12.0	54						

H. B. ROBINSON WATER TEMPERATURE PROFILE
December 9, 1975

Transect A	3	2	1
0'	54°	54°	53°
3'	54"	54"	54°
6'	54°	54°	54°
9'	54°	54°	54°
12'	54°	54°	53°
15'	54°	54°	-
18'	54°	54°	-
21'	54°	54°	-
24'	54°	54°	-
27'	54°	54°	-
30'	54°	54°	-
33'	54°	54°	-
36'	54°	54°	-
39'	54°	-	-

Transect B	3	2	1
0'	54°	54°	54°
3'	54°	54°	54°
6'	54°	54°	54°
9'	54°	54°	54°
12'	54°	54°	54°
15'	54°	54°	54°
18'	54°	54°	54°
21'	54°	54°	54°
24'	54°	54°	54°
27'	54°	54°	54°
30'	54°	54°	54°
33'	-	-	54°

Transect C	3	2	1
0'	54°	54°	53°
3'	54°	54°	54°
6'	54°	54°	-
9'	54°	54°	-
12'	54°	54°	-
15'	54°	54°	-
18'	54°	54°	-
21'	54°	54°	-
24'	54°	54°	-

Transect CA	3	2	1
0'	54°	54°	54°
3'	54°	54°	54°
6'	54°	54°	54°
9'	54°	54°	54°
12'	-	54°	54°
15'	-	54°	54°
18'	-	54°	54°
21'	-	54°	-
24'	-	54°	-

Transect D	3	2	1
0'	54°	54°	55°
3'	55°	55°	55°
6'	55°	55°	55°
9'	-	55°	55°
12'	-	-	55°
15'	-	-	54°
18'	-	-	54°

Transect DA	3	2	1
0'	54°	54°	54°
3'	55°	54°	54°
6'	55°	54°	54°
9'	54°	54°	54°
12'	-	54°	54°
15'	-	-	54°

Transect E	3	2	1
0'	57°	56°	54°
3'	57°	56°	54°
6'	56°	53°	52°
9'	-	-	50°
12'	-	-	50°

Station F	
0'	49°
3'	49°
6'	49°
9'	49°

Station G	
0'	48°
3'	48°
6'	48°
9'	48°

Station H	
0'	54°
3'	54°
6'	54°

Station I*	
0'	47°
3'	47°
6'	47°
9'	47°

Station K	
0'	53°
3'	53°
6'	53°

THERMAL PLUME MONITORING
H. B. ROBINSON STEAM ELECTRIC PLANT December 9, 1975

Sampling Station	Surface °C	Surface °F	3' °C	3' °F	6' °C	6' °F	9' °C	9' °F	12' °C	12' °F
5	12.4	54	12.6	55	12.5	55	12.5	55		
6	12.8	55	12.7	55	12.5	55	11.2	52		
7	13.0	55	12.7	55	12.5	55	11.0	52	11.0	52
14	13.8	57	14.0	57	12.8	55				
15	13.7	57	13.5	56	12.0	54				
16	13.6	56	13.6	56	11.5	53				
17	13.0	55	12.8	55	11.5	53	10.5	51	10.5	51
18	12.5	55	12.5	55	11.6	53	11.0	52		
24	12.0	54								
25	12.0	54								
26	12.5	55	12.5	55	11.0	52	10.1	50	10.1	50
27	12.2	54	12.2	54	11.0	52	10.1	50	10.1	50
28	12.1	54	12.2	54	11.5	53	10.4	51		
32	12.4	54								
33	12.0	54	12.0	54	10.1	50	10.1	50		
34	12.0	54	12.1	54	10.5	51	10.1	50		
Lower Big Beaverdam Creek	11.8	53	12.0	54	12.0	54	11.4	53		
Middle Big Beaverdam Creek	11.5	53	11.1	52						
Upper Big Beaverdam Creek	12.0	54	12.1	54						

H. B. ROBINSON WATER TEMPERATURE PROFILE
January 6, 1976

Transect A	Intake	3	2	1
0'	52°	52°	52°	51°
3'	52°	53°	52°	51°
6'	52°	53°	52°	51°
9'	53°	53°	52°	52°
12'	53°	53°	52°	51°
15'	53°	53°	52°	51°
18'	53°	53°	52°	-
21'	53°	-	53°	-
24'	53°	-	53°	-
27'	53°	-	53°	-
30'	53°	-	53°	-
33'	53°	-	-	-
36'	54°	-	-	-
39'	54°	-	-	-
42'	54°	-	-	-

Transect B	3	2	1
0'	53°	54°	53°
3'	54°	54°	54°
6'	54°	54°	54°
9'	54°	55°	55°
12'	54°	54°	55°
15'	54°	55°	55°
18'	54°	55°	55°
21'	54°	55°	54°
24'	54°	54°	54°
27'	54°	54°	55°
30'	54°	54°	54°
33'	-	54°	55°

Transect C	3	2	1
0'	56°	55°	54°
3'	57°	55°	55°
6'	56°	55°	55°
9'	57°	55°	-
12'	57°	55°	-
15'	57°	55°	-
18'	57°	55°	-
21'	57°	56°	-
24'	56°	56°	-
27'	-	56°	-

Transect CA	3	2	1
0'	57°	56°	55°
3'	59°	57°	56°
6'	59°	57°	56°
9'	59°	57°	56°
12'	-	56°	56°
15'	-	56°	56°
18'	-	56°	-
21'	-	56°	-

Transect D	3	2	1
0'	60°	60°	54°
3'	61°	60°	56°
6'	59°	57°	56°
9'	-	56°	56°
12'	-	56°	56°
15'	-	-	55°
18'	-	-	55°
21'	-	-	55°

Transect DA	3	2	1
0'	62°	60°	55°
3'	63°	58°	57°
6'	58°	58°	57°
9'	55°	57°	57°
12'	-	54°	53°
15'	-	54°	53°

Transect E	3	2	1
0'	68°	67°	67°
3'	70°	66°	65°
6'	69°	63°	64°
9'	-	54°	52°
12'	-	-	51°

Station F	
0'	44°
3'	45°
6'	44°
9'	44°

Station G	
0'	41°
3'	41°
6'	41°
9'	41°

Station H*	
0'	52°
3'	52°
6'	52°

Station I*	
0'	39°
3'	39°
6'	38°

Station K*	
0'	50°
3'	50°
6'	50°

*January 7, 1976

THERMAL PLUME MONITORING
H. B. ROBINSON STEAM ELECTRIC PLANT

January 6, 1976

Sampling Station	Surface °C	Surface °F	3' °C	3' °F	6' °C	6' °F	9' °C	9' °F	12' °C	12' °F
5	17.0	63	17.5	63	12.5	55	11.2	52		
6	16.5	62	16.7	62	14.0	57	11.3	52	10.5	51
7	17.2	63	17.0	63	10.5	51	10.0	50	10.0	50
14	19.5	67	20.5	69	20.5	69				
15	19.5	67	19.4	67	14.5	58				
16	19.5	67	18.8	66	17.0	63	12.0	54		
17	19.8	68	20.4	69	17.5	63	11.0	52	11.0	52
18	19.0	66	18.5	65	17.0	63	11.2	52	11.0	52
24	19.5	67								
25	19.5	67	20.2	68						
26	19.0	66	20.0	68	16.0	61	10.5	51	10.5	51
27	19.5	67	18.5	65	17.5	63	11.0	52	10.5	51
28	19.5	67	19.7	67	18.4	65	11.2	52		
32	19.0	66	19.0	66	16.0	61	11.0	52		
33	18.5	65	18.5	65	16.0	61	10.0	50		
34	19.5	67								
Lower Big Beaverdam Creek	12.5	55	13.0	55	12.8	55	11.5	53	10.5	51
Middle Big Beaverdam Creek	8.0	46	8.0	46						
Upper Big Beaverdam Creek	9.0	48								

H. B. ROBINSON WATER TEMPERATURE PROFILE
February 17, 1976

Transect A	Intake	3	2	1
0'	61°	61°	62°	62°
3'	60°	60°	61°	62°
6'	60°	60°	61°	61°
9'	60°	60°	61°	61°
12'	59°	60°	60°	61°
15'	59°	60°	61°	61°
18'	59°	58°	61°	-
21'	59°	-	58°	-
24'	59°	-	58°	-
27'	58°	-	58°	-
30'	58°	-	58°	-
33'	58°	-	57°	-
36'	58°	-	-	-
39'	57°	-	-	-

Transect B	3	2	1
0'	63°	62°	63°
3'	63°	62°	62°
6'	62°	62°	62°
9'	62°	62°	62°
12'	62°	62°	62°
15'	61°	62°	62°
18'	61°	61°	62°
21'	60°	60°	60°
24'	60°	59°	60°
27'	59°	57°	58°
30'	-	57°	58°
33'	-	57°	57°

Transect C	3	2	1
0'	64°	64°	64°
3'	64°	64°	64°
6'	63°	64°	64°
9'	64°	64°	-
12'	63°	63°	-
15'	62°	63°	-
18'	61°	63°	-
21'	61°	58°	-
24'	58°	58°	-
27'	-	57°	-

Transect CA	3	2	1
0'	67°	68°	67°
3'	67°	67°	67°
6'	67°	67°	67°
9'	67°	65°	67°
12'	67°	64°	67°
15'	63°	62°	63°
18'	-	62°	-
21'	-	59°	-
24'	-	59°	-

Transect D	3	2	1
0'	69°	69°	69°
3'	69°	71°	69°
6'	69°	69°	69°
9'	68°	-	69°
12'	-	-	69°
15'	-	-	67°
18'	-	-	61°

Transect DA	3	2	1
0'	70°	70°	70°
3'	70°	71°	70°
6'	70°	71°	70°
9'	67°	70°	70°
12'	-	61°	63°
15'	-	60°	59°

Transect E	3	2	1
0'	75°	73°	73°
3'	76°	73°	74°
6'	76°	73°	74°
9'	-	66°	61°
12'	-	62°	-

Station F	
0'	66°
3'	65°
6'	59°
9'	58°

Station G	
0'	58°
3'	58°
6'	58°

Station H	
0'	62°
3'	60°
6'	60°

Station I	
0'	59°
3'	59°
6'	59°
9'	58°

Station K	
0'	63°
3'	62°
6'	62°

THERMAL PLUME MONITORING
H. B. ROBINSON STEAM ELECTRIC PLANT

February 17, 1976

Sampling Station	Surface °C	Surface °F	3' °C	3' °F	6' °C	6' °F	9' °C	9' °F	12' °C	12' °F
5	21.5	71	21.1	70	20.5	69	18.8	66		
6	22.0	72	21.5	71	21.5	71	16.4	62		
7	22.5	72	22.5	72	22.3	72	19.8	68	16.0	61
14	24.0	75	24.0	75	23.5	74				
15	22.5	72	22.8	73	22.8	73				
16	23.0	73	23.0	73	22.8	73	19.0	66	16.5	62
17	22.5	72	22.8	73	23.0	73	17.5	64		
18	22.4	72	22.5	72	22.5	72	22.5	72		
24	23.0	73								
25	23.5	74								
26	23.4	74	23.2.	74	21.5	71	16.5	62		
27	23.0	73	23.3	74	23.1	74	16.3	61		
28	22.5	72	23.0	73						
32	20.0	68								
33	22.0	72	22.5	72	21.0	70	16.0	61		
34	22.5	72	22.5	72	22.5	72	16.5	62		
Lower Big Beaverdam Creek	21.2	70	21.2	70	21.0	70	20.8	69		
Middle Big Beaverdam Creek	17.0	63	16.3	61						
Upper Big Beaverdam Creek	17.0	63								

H. B. ROBINSON WATER TEMPERATURE PROFILE
March 30, 1976

Transect A	Intake	3	2	1
0'	70°	70°	70°	69°
3'	70°	70°	69°	69°
6'	69°	70°	69°	69°
9'	69°	69°	69°	69°
12'	69°	69°	69°	68°
15'	69°	69°	68°	68°
18'	69°	69°	68°	-
21'	68°	68°	68°	-
24'	68°	-	67°	-
27'	68°	-	67°	-
30'	68°	-	66°	-
33'	66°	-	66°	-
36'	68°	-	-	-
40'	68°	-	-	-

Transect B	3	2	1
0'	71°	71°	70°
3'	71°	71°	70°
6'	70°	70°	70°
9'	70°	70°	70°
12'	69°	69°	69°
15'	68°	69°	68°
18'	68°	68°	68°
21'	68°	68°	68°
24'	68°	67°	67°
27'	67°	66°	67°
30'	67°	66°	67°
33'	-	66°	66°

Transect C	3	2	1
0'	72°	73°	72°
3'	73°	72°	72°
6'	72°	72°	72°
9'	71°	71°	-
12'	71°	71°	-
15'	70°	70°	-
18'	70°	70°	-
21'	70°	69°	-
24'	70°	68°	-
27'	67°	-	-

Transect CA	3	2	1
0'	75°	76°	76°
3'	73°	76°	75°
6'	73°	73°	73°
9'	72°	72°	72°
12'	72°	72°	72°
15'	71°	71°	-
18'	-	71°	-
21'	-	69°	-

Transect D	3	2	1
0'	79°	79°	79°
3'	79°	79°	79°
6'	74°	76°	75°
9'	73°	73°	74°
12'	-	73°	73°
15'	-	73°	72°
18'	-	-	69°

Transect DA	3	2	1
0'	78°	78°	78°
3'	78°	78°	78°
6'	75°	78°	78°
9'	73°	73°	73°
12'	-	73°	73°
15'	-	69°	68°
18'	-	-	66°
21'	-	-	64°

Transect E	3	2	1
0'	84°	83°	82°
3'	84°	83°	82°
6'	84°	82°	82°
9'	86°	73°	72°
12'	-	72°	71°

Station F	
0'	76°
3'	76°
6'	67°
9'	66°

Station G	
0'	69°
3'	65°
6'	65°

Station H	
0'	68°
3'	68°
6'	68°

Station I	
0'	64°
3'	64°
6'	64°
9'	64°

Station K	
0'	66°
3'	66°
6'	66°

THERMAL PLUME MONITORING
H. B. ROBINSON STEAM ELECTRIC PLANT March 30, 1976

Sampling Station	Surface °C	Surface °F	3' °C	3' °F	6' °C	6' °F	9' °C	9' °F	12' °C	12' °F	15' °C	15' °F
5	26.0	79	26.3	79	24.0	75	22.5	73				
6	27.0	81	27.0	81	25.0	77	23.0	73	21.5	71	21.0	70
7	27.5	81	27.5	81	24.8	77	23.0	73	22.0	72	20.5	69
14	29.0	84	28.0	82	25.0	77						
15	29.0	84	29.0	84	27.5	81	23.5	74				
16	28.5	83	28.5	83	28.0	82	23.0	73	22.0	72		
17	28.5	83	28.5	83	28.0	82	23.0	73	21.8	71		
18	28.8	84	28.5	83	28.0	82	22.5	73	21.5	71		
24	29.0	84										
25	29.0	84	27.5	81	26.0	79						
26	28.5	83	28.5	83	26.0	79	23.0	73	21.5	71		
28	27.5	81	28.5	83								
32	26.5	80	26.5	80								
33	26.5	80	26.5	80	26.5	80	21.0	70	21.0	70		
34	27.0	81	27.0	81	27.0	81	22.0	72				
Lower Big Beaverdam Creek	24.8	77	24.8	77	24.8	77	23.0	73				
Middle Big Beaverdam Creek	21.0	70	18.0	64								
Upper Big Beaverdam Creek	20.0	68										

CP&L EXHIBIT 2.2

Continuous Recorder Data:

Daily Average, Maxima and Minima

June 12, 1975 to May 10, 1976

Continuous Recorder Data

On June 12, 1975, the five continuous temperature monitoring units were installed as recommended and specified by the Atkins Technical, Inc. Initial retrieval of data strip charts indicated various problems associated with the electronic operation of the units. Discussions with Atkins began in an attempt to correct these problems and in an attempt to assure the accuracy of the data. It was not until mid-July that CP&L was informed that information relating to the proper positioning and installation of the submerged units had been incorrectly indicated. Work was immediately begun to have custom canister cases manufactured which would securely house and properly position each unit. On August 26, 1975, all units had been re-installed in a proper manner.

Because of various problems arising from and resulting from incorrect information supplied by the manufacturer to CP&L, a check of the calibration of the units was performed during the period September 22-26, 1975. Electronic circuiting for each unit was inspected and calibration checked against a laboratory thermometer, traceable to the National Bureau of Standards. Corrections to the calibration of each unit were made whenever necessary.

As a followup to the calibration of the units, discussions continued with Atkins and the following changes should be noted:

1. By November 14, 1975, units at the Spillway, the West Tower, the discharge, and Station K had been removed from their submerged positions, re-calibrated and re-installed on "land" with leads running to the water. Only Station F remained submerged.

2. Original specifications on the units indicated an electronic accuracy of ± 0.6°C (± 1.1°F). However, the manufacturer did not take into consideration the accuracy of the recording mechanism. Considering both the electronics and recording mechanisms, actual accuracy of each unit is ± 1.2°C (2.3°F).

Realizing the problems associated with the initial operation of the units, their inproper installation and various other misunderstandings between Atkins and CP&L, it is difficult to assign a specific degree of accuracy to the data collected prior to September 22, 1975. However, after this date, all data are accurate to ± 1.2°C (2.3°F).

Present plans call for collection of data through September, 1976, at which time a supplemental report will be available for EPA review. Since the original purpose (as indicated by EPA) for the installtion of continuous recorders "at three or four key locations" was "to allow evaluation of the thermal regime between intensive measurement periods," it is believed that data which are presently available are relative to this question , especially in the light that the "intensive measuring periods" (water temperature profile monitoring) were increased from once per month to twice monthly during the period when accuracy of the continuous monitors was questionable.

All data which were considered transcribable are presented in tabular form as daily means, maxima and minima. Generally, previous to September 5, 1975, calculations of daily means and determination of daily maxima and minima were done manually. Subsequent to September 5, 1975, a computer program was used.

LOCATION=STATION K MONTH=6 YEAR=75

OBS	DAY	MEAN	LOW	HIGH
1	1			
2	2			
3	3			
4	4			
5	5			
6	6			
7	7			
8	8			
9	9			
10	10			
11	11			
12	12			
13	13			
14	14			
15	15			
16	16			
17	17			
18	18			
19	19			
20	20			
21	21			
22	22			
23	23			
24	24			
25	25			
26	26			
27	27			
28	28			
29	29			
30	30			

LOCATION=STATION K MONTH=7 YEAR=75

OBS	DAY	MEAN	LOW	HIGH
1	1			
2	2			
3	3			
4	4			
5	5			
6	6			
7	7			
8	8			
9	9			
10	10			
11	11			
12	12			
13	13			
14	14			
15	15			
16	16			
17	17			
18	18			
19	19			
20	20			
21	21			
22	22			
23	23			
24	24			
25	25			
26	26			
27	27			
28	28			
29	29			
30	30			
31	31			

LOCATION=STATION K MONTH=8 YEAR=75

OBS	DAY	MEAN	LOW	HIGH
1	1			
2	2			
3	3			
4	4			
5	5			
6	6			
7	7			
8	8			
9	9			
10	10			
11	11			
12	12			
13	13			
14	14			
15	15			
16	16			
17	17			
18	18			
19	19			
20	20			
21	21			
22	22			
23	23			
24	24			
25	25			
26	26			
27	27			
28	28			
29	29			
30	30			
31	31			

LOCATION=STATION K YEAR=75 MONTH=9

OBS	DAY	MEAN	LOW	HIGH
1	1			
2	2			
3	3			
4	4			
5	5	32.7143	32.2	32.8
6	6	31.8500	31.0	32.8
7	7	30.6750	29.2	31.6
8	8	30.8750	29.8	32.2
9	9	31.6250	31.0	32.2
10	10	30.9750	30.4	31.0
11	11	30.5250	29.8	31.0
12	12	29.9000	29.8	30.4
13	13	28.3250	27.4	29.8
14	14	27.2250	26.2	27.4
15	15	26.8250	26.2	27.4
16	16	26.6435	26.2	27.4
17	17			
18	18			
19	19			
20	20			
21	21			
22	22			
23	23			
24	24			
25	25			
26	26			
27	27			
28	28			
29	29			
30	30			

LOCATION=STATION K YEAR=75 MONTH=10

OBS	DAY	MEAN	LOW	HIGH
1	1			
2	2			
3	3			
4	4			
5	5			
6	6			
7	7			
8	8			
9	9			
10	10			
11	11			
12	12			
13	13			
14	14			
15	15			
16	16			
17	17			
18	18			
19	19			
20	20			
21	21			
22	22	21.7500	20.8	22.6
23	23	22.0500	21.4	23.2
24	24	23.0000	22.6	23.8
25	25	23.4000	23.2	23.8
26	26	23.6500	23.2	23.8
27	27	23.6250	23.2	23.8
28	28	23.4087	21.4	23.8
29	29	23.0750	22.6	23.8
30	30	22.6000	22.6	22.6
31	31	21.3000	20.8	22.0

LOCATION=STATION K YEAR=75 MONTH=11

OBS	DAY	MEAN	LOW	HIGH
1	1	20.4087	19.6	21.4
2	2	20.0750	19.0	20.8
3	3	20.2000	19.8	20.8
4	4	20.2500	20.2	20.8
5	5	20.4087	20.2	20.8
6	6	20.6250	20.2	21.4
7	7	20.2000	20.2	20.2
8	8	20.0750	19.6	20.2
9	9	19.6750	19.0	20.2
10	10	19.9250	19.0	20.2
11	11	19.0750	19.0	19.6
12	12			
13	13			
14	14			
15	15			
16	16			
17	17			
18	18			
19	19			
20	20			
21	21			
22	22			
23	23			
24	24			
25	25			
26	26			
27	27			
28	28	12.1000	11.8	12.4
29	29	11.6696	11.2	11.8
30	30	11.8750	11.2	13.0

LOCATION=STATION K YEAR=75 MONTH=12

OBS	DAY	MEAN	LOW	HIGH
1	1	11.7217	11.2	11.8
2	2	10.9250	10.6	11.2
3	3	10.9652	10.6	11.8
4	4	10.9000	10.6	11.8
5	5	10.9652	10.6	11.8
6	6	11.1000	10.6	11.8
7	7	11.2522	10.6	11.8
8	8	10.6000	10.6	10.6
9	9	10.6000	10.6	10.6
10	10	10.3391	9.4	10.6
11	11	9.5826	8.8	10.6
12	12	9.6348	8.8	10.6
13	13	9.0500	8.8	9.4
14	14			
15	15			
16	16			
17	17			
18	18			
19	19	7.1000	6.4	7.6
20	20	7.3692	6.4	8.2
21	21			
22	22			
23	23			
24	24			
25	25			
26	26			
27	27			
28	28			
29	29			
30	30			
31	31			

LOCATION=STATION K YEAR=76 MONTH=1

OBS	DAY	MEAN	LOW	HIGH
1	1			
2	2			
3	3			
4	4			
5	5	9.4000	9.4	9.4
6	6	9.4000	9.4	9.4
7	7	9.1000	8.8	9.4
8	8	9.4000	8.8	10.0
9	9	8.5652	8.2	9.4
10	10	8.4471	7.6	8.8
11	11	8.7217	8.2	9.4
12	12	8.7750	8.2	9.4
13	13	9.0870	8.2	10.0
14	14	9.3478	8.8	9.4
15	15	8.9043	8.2	9.4
16	16	9.2435	8.8	10.0
17	17	9.2000	8.8	9.4
18	18	7.9600	7.0	8.8
19	19	7.1000	6.4	7.6
20	20	7.3231	6.4	8.2
21	21	7.0522	7.0	7.6
22	22	8.8636	6.4	7.0
23	23	7.2000	6.4	8.2
24	24	7.6545	7.0	8.2
25	25	8.0636	7.6	8.8
26	26	8.6435	8.2	9.4
27	27	9.2636	8.8	9.4
28	28	9.0609	8.2	10.0
29	29	10.0000	9.4	11.2
30	30	10.0545	9.4	10.6
31	31	10.3652	9.4	11.8

M.H. ROBINSON CONTINUOUS RECORDERS: CENTIGRADE

OBS	DAY	MEAN	LOW	HIGH
1	1	10.7909	10.6	11.2
2	2	9.9100	9.4	10.6
3	3	10.2182	9.4	11.8
4	4	10.4909	9.4	11.8
5	5	10.7333	10.6	11.8
6	6			
7	7			
8	8			
9	9			
10	10			
11	11			
12	12			
13	13			
14	14			
15	15			
16	16			
17	17			
18	18			
19	19			
20	20			
21	21			
22	22			
23	23			
24	24			
25	25			
26	26			
27	27			
28	28			
29	29			

OBS	DAY	MEAN	LOW	HIGH
1	1			
2	2			
3	3			
4	4			
5	5			
6	6			
7	7			
8	8			
9	9			
10	10			
11	11			
12	12			
13	13			
14	14			
15	15	16.6000	16.6	16.6
16	16	16.5143	16.0	16.6
17	17	15.8091	14.2	16.6
18	18	16.2348	15.4	16.6
19	19	16.8087	15.4	17.8
20	20	16.9250	16.0	17.8
21	21	17.0500	16.6	17.8
22	22	16.4364	15.4	16.6
23	23	17.4286	16.6	17.8
24	24	18.1000	16.6	19.0
25	25	17.5000	16.6	18.4
26	26	17.9750	16.6	19.0
27	27	17.9000	17.2	19.0
28	28	18.3217	16.6	19.6
29	29	19.6429	19.0	20.2
30	30	19.0000	17.8	19.6
31	31	19.5478	19.0	20.2

OBS	DAY	MEAN	LOW	HIGH
1	1	18.8091	17.8	19.6
2	2	18.7913	17.8	20.2
3	3	19.1565	17.8	20.8
4	4	19.2087	18.4	20.2
5	5	18.8435	17.8	20.2
6	6	18.8957	17.8	20.2
7	7	19.6522	17.8	20.8
8	8	19.8727	19.0	20.2
9	9	19.5478	19.0	20.8
10	10	19.0783	17.8	20.2
11	11	19.3391	18.4	20.2
12	12	18.9100	18.4	19.6
13	13	18.8957	17.8	20.2
14	14	18.7545	17.8	19.6
15	15	19.4174	19.0	20.2
16	16	19.6783	19.0	21.4
17	17	20.3091	19.0	22.0
18	18	21.5304	20.2	23.2
19	19	22.0783	21.4	22.6
20	20	21.8696	20.8	23.2
21	21	21.7273	20.8	23.2
22	22	22.0000	21.4	23.2
23	23	22.2870	21.4	23.8
24	24	22.8087	22.0	23.8
25	25	21.6182	21.4	22.0
26	26	21.4783	20.8	22.0
27	27	21.1500	20.2	22.0
28	28	21.9182	21.4	22.6
29	29	21.7913	20.8	22.6
30	30	21.4000	21.4	21.4

OBS	DAY	MEAN	LOW	HIGH
1	1	21.4783	20.8	22.0
2	2	21.9727	21.4	23.2
3	3	21.8957	20.8	23.2
4	4	21.2696	20.8	22.0
5	5	21.4261	20.2	22.6
6	6	21.6727	20.8	22.6
7	7	21.9727	21.4	22.6
8	8	21.3478	20.8	22.0
9	9	21.6609	20.8	22.6

H.B. ROBINSON CONTINUOUS RECORDERS: CENTIGRADE

LOCATION=SPILLWAY MONTH=6 YEAR=75

OBS	DAY	MEAN	LOW	HIGH
1	1			
2	2			
3	3			
4	4			
5	5			
6	6			
7	7			
8	8			
9	9			
10	10			
11	11			
12	12			
13	13			
14	14			
15	15			
16	16			
17	17			
18	18			
19	19			
20	20			
21	21			
22	22			
23	23			
24	24			
25	25			
26	26			
27	27			
28	28			
29	29			
30	30			

LOCATION=SPILLWAY MONTH=7 YEAR=75

OBS	DAY	MEAN	LOW	HIGH
1	1			
2	2			
3	3			
4	4			
5	5			
6	6			
7	7			
8	8			
9	9			
10	10			
11	11			
12	12			
13	13			
14	14			
15	15			
16	16			
17	17			
18	18			
19	19			
20	20			
21	21			
22	22			
23	23			
24	24			
25	25			
26	26			
27	27			
28	28			
29	29			
30	30			
31	31			

LOCATION=SPILLWAY MONTH=8 YEAR=75

OBS	DAY	MEAN	LOW	HIGH
1	1			
2	2			
3	3			
4	4			
5	5			
6	6			
7	7			
8	8			
9	9			
10	10			
11	11			
12	12			
13	13			
14	14			
15	15			
16	16			
17	17			
18	18			
19	19			
20	20			
21	21			
22	22			
23	23			
24	24			
25	25			
26	26			
27	27			
28	28			
29	29			
30	30			
31	31			

- LOCATION=SPILLWAY YEAR=75 MONTH=9 -

OBS	DAY	MEAN	LOW	HIGH
1	1	30.0000	26.0	34.0
2	2	29.0000	26.0	31.0
3	3	29.0000	28.0	31.0
4	4	30.0000	28.0	33.0
5	5	33.1273	32.8	34.0
6	6	32.0000	31.6	32.2
7	7	31.6000	31.0	32.2
8	8	32.8000	31.6	34.6
9	9	32.7000	31.6	33.4
10	10	31.4500	31.0	32.2
11	11	31.3000	31.0	32.2
12	12	31.0000	31.0	31.0
13	13	30.0750	29.8	31.0
14	14	28.8750	28.6	29.8
15	15	27.7750	27.4	28.6
16	16	27.4000	27.4	27.4
17	17	27.4000	27.4	27.4
18	18	27.2750	26.8	27.4
19	19	27.1500	26.8	27.4
20	20	26.5500	26.2	27.4
21	21	26.9500	26.2	27.4
22	22	27.6800	27.4	28.0
23	23			
24	24			
25	25			
26	26	28.4588	27.4	29.8
27	27	28.0500	27.4	28.6
28	28	27.2750	26.8	27.4
29	29	26.4500	26.2	26.8
30	30	25.8250	25.0	26.2

LOCATION=SPILLWAY YEAR=75 MONTH=10

OBS	DAY	MEAN	LOW	HIGH
1	1	26.250	25.6	26.8
2	2	27.000	26.8	27.4
3	3	25.400	25.0	26.8
4	4	24.350	23.8	25.0
5	5	23.525	23.2	23.8
6	6	24.275	23.2	26.2
7	7	25.150	24.4	26.2
8	8	24.750	24.4	25.6
9	9	25.325	23.8	26.8
10	10	27.125	26.2	28.6
11	11	26.625	26.2	27.4
12	12	26.650	26.2	28.0
13	13	26.925	26.2	27.4
14	14	26.950	26.8	27.4
15	15	26.325	25.6	26.8
16	16	26.025	25.6	26.2
17	17	25.575	25.0	26.2
18	18	25.125	25.0	25.6
19	19	24.550	24.4	25.0
20	20	23.800	23.8	23.8
21	21	23.325	23.2	24.4
22	22	23.650	23.2	24.4
23	23	24.175	23.2	25.0
24	24	24.525	24.4	25.0
25	25	24.775	23.8	26.8
26	26	25.425	25.0	25.6
27	27	24.900	24.4	25.0
28	28	24.350	23.8	25.0
29	29	24.625	23.8	25.6
30	30	24.200	23.2	25.0
31	31	22.750	22.0	23.2

LOCATION=SPILLWAY YEAR=75 MONTH=11

OBS	DAY	MEAN	LOW	HIGH
1	1	22.3250	21.4	23.2
2	2	22.2750	21.4	23.8
3	3	21.7250	21.4	23.8
4	4	21.5750	20.8	22.6
5	5	22.2750	21.4	23.8
6	6	21.7000	21.4	22.6
7	7	20.9500	20.8	21.4
8	8	21.1500	20.8	22.6
9	9	21.0500	20.8	21.4
10	10	20.6750	20.2	20.8
11	11	21.1250	20.2	21.4
12	12	21.0250	20.8	21.4
13	13	20.8000	20.8	20.8
14	14	18.6182	17.8	19.0
15	15	17.5500	17.2	18.4
16	16	16.8500	16.6	17.2
17	17	17.0000	16.6	17.8
18	18	16.7500	16.0	19.0
19	19	16.0250	15.4	16.6
20	20	15.6250	15.4	16.6
21	21	15.3000	14.8	16.0
22	22	14.4500	14.2	14.8
23	23	13.3500	13.0	14.2
24	24	12.8857	12.4	13.0
25	25	12.8435	12.4	13.0
26	26	12.2750	11.8	13.0
27	27	11.8000	11.8	11.8
28	28	12.2000	11.8	13.0
29	29	11.8000	11.8	11.8
30	30	11.8000	11.8	11.8

LOCATION=SPILLWAY YEAR=75 MONTH=12

OBS	DAY	MEAN	LOW	HIGH
1	1	11.8000	11.8	11.8
2	2	11.8000	11.2	12.4
3	3	11.9565	11.2	13.0
4	4	11.6500	11.2	12.4
5	5	11.4348	11.2	11.8
6	6	11.3250	10.6	11.8
7	7	11.4609	11.2	11.8
8	8	11.4348	10.6	11.8
9	9	10.6000	10.6	10.6
10	10	10.5739	10.0	10.6
11	11	10.2000	9.4	10.6
12	12	10.0522	9.4	10.6
13	13	10.3913	9.4	11.8
14	14	11.1739	10.0	13.0
15	15	11.2500	10.6	11.8
16	16	11.2261	10.6	11.8
17	17	11.6174	11.2	12.4
18	18	12.0250	11.8	12.4
19	19	11.5652	10.6	13.0
20	20	10.6783	9.4	11.8
21	21	9.6500	9.4	10.6
22	22	9.2091	8.2	9.4
23	23	9.5304	8.2	10.0
24	24	9.5565	9.4	10.0
25	25	9.4000	9.4	9.4
26	26	9.4000	9.4	9.4
27	27	9.4000	9.4	9.4
28	28	10.0000	9.4	10.6
29	29	10.7304	10.6	11.2
30	30	10.6000	10.6	10.6
31	31	10.6783	10.6	11.2

- LOCATION=SPILLWAY YEAR=76 MONTH=1

OBS	DAY	MEAN	LOW	HIGH
1	1	10.6261	10.6	11.2
2	2	11.6435	10.6	12.4
3	3	11.4870	10.6	11.8
4	4	10.6250	10.6	11.2
5	5	11.3000	10.6	11.8
6	6	10.9652	10.6	11.8
7	7	10.3913	10.0	10.6
8	8	10.2348	10.0	10.6
9	9	9.8435	9.4	10.6
10	10	9.5412	8.8	10.6
11	11	9.5826	9.4	10.0
12	12	9.4261	9.4	10.0
13	13	9.5043	9.4	10.0
14	14	9.8174	9.4	10.6
15	15	9.9217	9.4	10.6
16	16	10.2870	10.0	10.6
17	17	9.7391	9.4	10.6
18	18	9.2435	8.8	10.0
19	19	8.1400	7.6	9.4
20	20	7.5625	7.0	8.2
21	21	7.1091	7.0	7.6
22	22	7.0261	7.0	7.6
23	23	7.7909	7.0	8.2
24	24	7.9130	7.6	8.2
25	25	8.3091	8.2	9.4
26	26	8.9304	8.2	9.4
27	27	9.5636	9.4	10.6
28	28	10.9652	10.0	11.8
29	29	11.8000	11.8	11.8
30	30	11.6957	11.2	11.8
31	31	11.5000	11.2	11.8

H.8. ROBINSON CONTINUOUS RECORDERS: CENTIGRADE

- LOCATION=SPILLWAY YEAR=76 MONTH=2 -

OBS	DAY	MEAN	LOW	HIGH
1	1	11.4087	11.2	11.8
2	2	10.7200	10.6	11.2
3	3			
4	4			
5	5	12.2286	11.8	13.0
6	6	12.1143	11.8	13.0
7	7	12.6571	11.8	13.0
8	8	12.3455	11.8	13.0
9	9	12.0286	11.8	12.4
10	10	11.9714	11.8	12.4
11	11	12.1273	11.8	12.4
12	12	13.2857	12.4	14.2
13	13	13.0571	13.0	13.6
14	14	13.9273	13.0	14.8
15	15	14.2571	14.2	14.8
16	16	14.3714	13.6	15.4
17	17	14.7455	14.2	15.4
18	18	15.3727	14.8	15.4
19	19	16.5727	15.4	17.2
20	20	17.3364	16.0	19.0
21	21	17.4455	16.6	18.4
22	22	16.6273	16.6	17.2
23	23	16.6000	16.6	16.6
24	24	16.3273	16.0	16.6
25	25	15.8909	15.4	16.6
26	26	16.2455	16.0	16.6
27	27	17.5273	16.6	19.0
28	28	18.8909	18.4	19.6
29	29	18.0182	17.8	19.0

- LOCATION=SPILLWAY YEAR=76 MONTH=3 -

OBS	DAY	MEAN	LOW	HIGH
1	1	19.5455	17.8	21.4
2	2	19.1636	18.4	20.2
3	3	20.0364	19.0	21.4
4	4	20.2818	19.0	21.4
5	5	20.0364	19.6	20.8
6	6	20.7727	20.2	21.4
7	7	21.8091	21.4	23.2
8	8	21.4000	21.4	21.4
9	9	20.9091	20.2	21.4
10	10	19.6000	19.0	20.8
11	11	19.4364	19.0	20.2
12	12	19.0000	19.0	19.0
13	13	19.0000	19.0	19.0
14	14	18.0182	17.8	19.0
15	15	17.8000	17.8	17.8
16	16	17.6636	16.6	17.8
17	17	16.8087	16.6	17.8
18	18	16.5182	16.0	16.6
19	19	16.6000	16.6	16.6
20	20	16.6000	16.6	16.6
21	21	16.6818	16.6	17.2
22	22	16.8870	16.6	17.2
23	23	17.8000	16.6	19.0
24	24	17.7217	17.2	17.8
25	25	17.6636	17.2	17.8
26	26	18.4261	17.8	21.4
27	27	17.8000	17.8	17.8
28	28	19.8087	17.8	21.4
29	29	21.2667	20.8	21.4
30	30	20.4571	20.2	20.8
31	31	20.1000	19.0	20.2

- LOCATION=SPILLWAY YEAR=76 MONTH=4 -

OBS	DAY	MEAN	LOW	HIGH
1	1	20.1739	19.0	20.8
2	2	20.2000	19.6	20.8
3	3	20.0174	19.0	20.2
4	4	20.0250	19.6	20.2
5	5	20.0435	19.0	20.2
6	6	20.0500	19.0	22.6
7	7	20.8783	20.2	22.0
8	8	21.4000	20.8	22.0
9	9	21.0750	20.2	21.4
10	10	20.1250	19.6	20.8
11	11	20.2000	20.2	20.2
12	12	20.0696	19.0	20.8
13	13	20.3636	20.2	20.8
14	14	20.2750	19.6	20.8
15	15	20.4500	20.2	21.4
16	16	20.7250	20.2	21.4
17	17	22.7250	21.4	25.0
18	18	25.5500	23.8	28.0
19	19	25.0750	23.8	26.2
20	20	24.5250	23.8	25.0
21	21	24.1750	22.6	25.0
22	22	24.5250	23.8	25.6
23	23	26.5130	25.0	28.6
24	24	26.3500	25.0	28.0
25	25	24.8696	24.4	25.0
26	26	24.6250	24.4	25.0
27	27	24.5364	23.8	25.6
28	28	24.1391	23.8	25.0
29	29	23.8000	23.8	23.8
30	30	23.5913	23.2	23.8

- LOCATION=SPILLWAY YEAR=76 MONTH=5 -

OBS	DAY	MEAN	LOW	HIGH
1	1	22.8609	22.6	23.2
2	2	23.0435	22.6	23.8
3	3	23.1739	22.6	23.2
4	4	23.2261	22.6	24.4
5	5	23.0435	22.6	23.8
6	6	22.7043	22.6	23.2
7	7	23.1739	22.6	24.4
8	8	23.4087	23.2	23.8
9	9	23.9043	22.6	25.6

H.B. ROBINSON CONTINUOUS RECORDERS: CENTIGRADE

LOCATION=WEST TOWER MONTH=6 YEAR=75

OBS	DAY	MEAN	LOW	HIGH
1	1			
2	2			
3	3			
4	4			
5	5			
6	6			
7	7			
8	8			
9	9			
10	10			
11	11			
12	12	29.0000	29.0	29.0
13	13	31.0000	29.0	31.0
14	14	32.0000	31.0	34.0
15	15	31.0000	31.0	32.0
16	16	31.0000	29.0	32.0
17	17	34.0000	32.0	36.0
18	18	33.0000	32.0	35.0
19	19	33.0000	31.0	34.0
20	20	34.0000	32.0	35.0
21	21	33.0000	32.0	34.0
22	22	32.0000	32.0	33.0
23	23	33.0000	32.0	35.0
24	24	33.0000	32.0	35.0
25	25	33.0000	32.0	36.0
26	26	35.0000	32.0	35.0
27	27	33.0000	32.0	34.0
28	28	33.0000	32.0	34.0
29	29	33.0000	32.0	34.0
30	30	33.0000	32.0	34.0

LOCATION=WEST TOWER MONTH=7 YEAR=75

OBS	DAY	MEAN	LOW	HIGH
1	1	33.0001	32.1	34.1
2	2	34.0000	32.0	36.0
3	3	33.0000	32.0	33.0
4	4	32.0000	31.0	32.0
5	5	33.0000	31.0	35.0
6	6	33.0000	32.0	34.0
7	7	32.0000	31.0	32.0
8	8	31.0000	31.0	32.0
9	9	31.0000	31.0	32.0
10	10	32.0000	31.0	32.0
11	11	31.0000	31.0	32.0
12	12	31.0000	31.0	32.0
13	13	31.0000	30.0	31.0
14	14	30.0000	29.0	31.0
15	15	30.0000	29.0	31.0
16	16	30.0000	29.0	32.0
17	17	30.0000	29.0	31.0
18	18	31.0000	30.0	31.0
19	19	30.0000	29.0	31.0
20	20	30.0000	29.0	31.0
21	21	31.0000	30.0	32.0
22	22	32.0000	31.0	33.0
23	23	33.0000	32.0	33.0
24	24	32.0000	32.0	33.0
25	25	32.0000	31.0	32.0
26	26	33.0000	32.0	33.0
27	27	33.0000	32.0	33.0
28	28	32.0000	31.0	32.0
29	29	33.0000	31.0	35.0
30	30	33.0000	32.0	35.0
31	31	33.0000	32.0	34.0

LOCATION=WEST TOWER MONTH=8 YEAR=75

OBS	DAY	MEAN	LOW	HIGH
1	1	33.0000	32.0	34.0
2	2	33.0000	32.0	34.0
3	3			
4	4			
5	5			
6	6			
7	7			
8	8			
9	9			
10	10			
11	11			
12	12	34.0000	31.0	35.0
13	13	34.0000	33.0	35.0
14	14	33.0000	32.0	34.0
15	15	33.0000	32.0	34.0
16	16	32.0000	32.0	32.0
17	17	32.0000	32.0	32.0
18	18	33.0000	32.0	34.0
19	19	33.0000	32.0	34.0
20	20	33.0000	32.0	34.0
21	21	34.0000	32.0	35.0
22	22	35.0000	33.0	35.0
23	23	34.0000	34.0	35.0
24	24			
25	25			
26	26	36.0000	35.0	38.0
27	27	35.0000	34.0	37.0
28	28	33.0000	33.0	34.0
29	29	34.0000	34.0	35.0
30	30	34.0000	33.0	35.0
31	31	34.0000	33.0	37.0

LOCATION=WEST TOWER MONTH=9 YEAR=75

OBS	DAY	MEAN	LOW	HIGH
1	1	34.000[illegible]	33.0	35.[illegible]
2	2	34.0000	32.0	35.0
3	3	34.0000	34.0	36.0
4	4	35.0000	34.0	35.0
5	5	35.2750	34.0	36.4
6	6	32.6105	31.0	34.0
7	7	32.4000	31.0	34.0
8	8	32.7333	31.0	34.6
9	9	33.7000	32.8	34.6
10	10	32.8857	32.2	33.4
11	11	32.2750	31.6	32.8
12	12	31.5250	31.0	32.2
13	13	30.7913	30.4	31.6
14	14	29.3250	28.6	30.4
15	15	28.4000	28.0	29.2
16	16	28.4174	28.0	29.2
17	17	28.5250	28.0	28.6
18	18	27.5750	27.4	28.0
19	19	27.3000	26.8	27.4
20	20	28.1000	27.4	29.2
21	21	28.8000	28.0	29.8
22	22	29.3385	29.2	29.8
23	23			
24	24			
25	25			
26	26			
27	27			
28	28			
29	29			
30	30	27.2400	26.2	28.6

LOCATION=WEST TOWER YEAR=75 MONTH=10

OBS	DAY	MEAN	LOW	HIGH
1	1	27.850	27.4	28.6
2	2	27.925	27.4	29.2
3	3	25.875	25.0	26.8
4	4	24.975	24.4	25.6
5	5	24.225	23.8	25.0
6	6	24.825	24.4	26.2
7	7	26.625	25.0	28.0
8	8	26.375	26.2	27.4
9	9	27.075	25.6	28.6
10	10	28.075	27.4	28.6
11	11	27.900	26.8	28.6
12	12	27.875	26.8	29.2
13	13	28.625	27.4	29.8
14	14	28.150	27.4	28.6
15	15	27.850	27.4	28.6
16	16	27.650	27.4	28.6
17	17	27.375	26.8	28.0
18	18	26.600	26.2	27.4
19	19	25.800	25.0	26.2
20	20	24.950	24.4	25.0
21	21	24.700	23.8	25.0
22	22	24.375	23.8	25.0
23	23	26.175	25.6	27.4
24	24	25.425	24.4	27.4
25	25	25.725	25.0	27.4
26	26	26.600	25.6	28.0
27	27	25.925	25.6	26.2
28	28	26.375	25.6	27.4
29	29	26.550	26.2	27.4
30	30	25.050	23.8	26.8
31	31	22.900	22.6	23.8

LOCATION=WEST TOWER YEAR=75 MONTH=11

OBS	DAY	MEAN	LOW	HIGH
1	1	22.875	22.0	23.8
2	2	21.850	21.4	22.6
3	3	21.600	21.4	22.6
4	4	21.850	21.4	22.6
5	5	22.100	21.4	23.8
6	6	22.200	21.4	22.6
7	7	21.425	21.4	22.0
8	8	21.750	21.4	22.6
9	9	22.075	21.4	22.6
10	10	21.875	21.4	22.6
11	11	21.775	21.4	22.6
12	12	21.825	21.4	22.6
13	13	21.400	21.4	21.4
14	14	18.400	17.8	19.0
15	15	17.425	16.6	17.8
16	16	16.850	16.0	17.8
17	17	16.725	15.4	17.8
18	18	16.275	15.4	17.2
19	19	16.025	15.4	17.2
20	20	16.075	15.4	16.6
21	21	15.875	15.4	16.0
22	22	14.675	14.2	14.8
23	23	13.550	13.0	14.2
24	24	12.600	11.8	13.0
25	25	12.175	11.8	13.0
26	26	11.825	11.8	12.4
27	27	11.800	11.8	11.8
28	28	12.250	11.8	13.0
29	29	11.850	11.8	12.4
30	30	12.175	11.8	13.0

LOCATION=WEST TOWER YEAR=75 MONTH=12

OBS	DAY	MEAN	LOW	HIGH
1	1	11.8000	11.8	11.8
2	2	11.4500	11.2	12.4
3	3	11.4250	10.6	13.0
4	4	11.2500	10.6	13.0
5	5	11.4750	10.6	13.0
6	6	12.0000	11.2	13.0
7	7	11.8250	11.2	12.4
8	8	10.8182	10.6	11.2
9	9	10.7000	10.6	11.2
10	10	10.5750	10.0	10.6
11	11	10.2750	9.4	10.6
12	12	9.9500	9.4	10.6
13	13	10.7500	9.4	13.0
14	14	11.6000	10.6	13.0
15	15	12.1000	11.8	13.0
16	16	12.0000	11.8	13.0
17	17	13.3750	12.4	14.2
18	18	12.2400	11.8	13.0
19	19			
20	20			
21	21			
22	22	9.4000	9.4	9.4
23	23	11.1250	10.0	11.8
24	24	10.8000	10.0	11.8
25	25	10.8250	10.0	11.8
26	26	10.2750	10.0	10.6
27	27	10.3500	9.4	11.8
28	28	12.1750	11.8	12.4
29	29	11.6500	11.2	11.8
30	30	11.4500	10.6	11.8
31	31	12.1750	11.8	13.6

LOCATION=WEST TOWER YEAR=76 MONTH=1

OBS	DAY	MEAN	LOW	HIGH
1	1	12.0750	11.2	14.2
2	2	13.6750	13.0	14.2
3	3	12.5500	12.4	13.0
4	4	11.8000	11.2	12.4
5	5	11.7727	11.2	12.4
6	6	11.4750	10.6	12.4
7	7	11.4500	11.2	11.8
8	8	10.7750	10.0	11.8
9	9	10.6250	9.4	11.8
10	10	10.8000	10.0	11.8
11	11	10.1000	10.0	10.6
12	12	10.7000	9.4	13.0
13	13	11.7250	11.2	13.0
14	14	10.9250	10.6	11.2
15	15	11.4000	10.6	12.4
16	16	10.4750	10.0	10.6
17	17	9.8000	9.4	10.0
18	18	9.0500	8.8	9.4
19	19	9.2500	7.6	10.6
20	20	7.0000	7.0	7.0
21	21	7.0250	7.0	7.6
22	22	8.4250	6.4	10.0
23	23	8.6750	8.2	9.4
24	24	8.3000	8.2	8.8
25	25	9.3750	8.2	10.6
26	26	10.6500	10.0	11.8
27	27	11.9000	11.2	12.4
28	28	12.6000	11.2	13.6
29	29	12.2500	11.8	13.0
30	30	12.2000	11.8	13.0
31	31	12.9250	11.8	14.2

H.B. ROBINSON CONTINUOUS RECORDERS: CENTIGRADE

OBS	DAY	MEAN	LOW	HIGH
1	1	12.200	11.8	13.0
2	2	11.450	11.2	11.8
3	3	12.075	11.2	13.0
4	4	14.175	12.4	15.4
5	5	13.525	13.0	14.2
6	6	13.875	13.0	14.2
7	7	13.325	12.4	13.6
8	8	13.050	13.0	13.6
9	9	12.650	11.8	14.2
10	10	13.550	13.0	14.8
11	11	12.975	12.4	13.6
12	12	14.925	13.6	15.4
13	13	14.025	13.6	14.8
14	14	15.725	14.2	17.8
15	15	15.775	15.4	16.6
16	16	15.900	15.4	16.6
17	17	16.575	16.0	17.2
18	18	17.125	16.6	17.8
19	19	17.900	17.2	19.0
20	20	19.325	17.8	21.4
21	21	18.600	17.8	20.2
22	22	18.025	17.8	18.4
23	23	17.175	16.6	17.8
24	24	17.725	17.2	17.8
25	25	17.025	16.6	17.8
26	26	17.925	17.2	19.0
27	27	19.400	17.8	20.8
28	28	19.900	19.0	20.8
29	29	19.250	19.0	20.2

OBS	DAY	MEAN	LOW	HIGH
1	1	20.9050	19.0	23.2
2	2	21.2000	20.2	22.0
3	3	22.0000	21.4	23.2
4	4	22.5000	21.4	23.8
5	5	22.4500	22.0	23.2
6	6	22.6500	22.6	23.2
7	7	23.1750	22.6	24.4
8	8	22.2750	21.4	23.2
9	9	21.3000	20.2	22.0
10	10	20.3000	19.6	21.4
11	11	20.3000	19.6	22.6
12	12	19.6000	19.0	20.2
13	13	19.3000	19.0	20.2
14	14	19.0500	17.8	20.2
15	15	18.7913	18.4	19.0
16	16	18.3750	17.8	19.0
17	17	17.5250	17.2	17.8
18	18	17.7000	17.2	17.8
19	19	17.3250	16.6	17.8
20	20	17.7000	17.2	17.8
21	21	17.8000	17.8	17.8
22	22	18.6000	17.8	19.0
23	23	19.0250	18.4	20.2
24	24	18.9000	18.4	20.2
25	25	18.0250	17.8	18.4
26	26	20.0750	18.4	23.8
27	27	18.8500	18.4	19.0
28	28	20.4250	18.4	22.6
29	29	21.9600	20.8	22.6
30	30			
31	31			

OBS	DAY	MEAN	LOW	HIGH
1	1			
2	2			
3	3			
4	4			
5	5			
6	6			
7	7			
8	8			
9	9			
10	10			
11	11			
12	12	22.1636	21.4	22.6
13	13	20.9250	20.2	22.0
14	14	20.6750	20.2	21.4
15	15	22.0250	20.8	23.8
16	16	22.7000	21.4	23.8
17	17	24.3000	22.6	26.2
18	18	26.3500	25.0	28.6
19	19	25.8500	25.0	27.4
20	20	25.6750	25.0	26.2
21	21	25.6250	25.6	26.2
22	22	25.7000	25.0	26.2
23	23	27.3500	26.2	28.6
24	24	27.2000	26.2	28.6
25	25	25.8609	25.6	26.2
26	26	25.0000	24.4	25.6
27	27	24.4500	23.8	25.6
28	28	24.1500	23.8	25.0
29	29	24.6000	23.8	26.2
30	30	23.5500	22.6	23.8

OBS	DAY	MEAN	LOW	HIGH
1	1	22.925	22.6	23.2
2	2	23.300	22.6	23.8
3	3	23.125	22.6	23.2
4	4	23.125	22.0	25.6
5	5	23.775	23.2	25.0
6	6	23.250	22.6	23.8
7	7	23.475	23.2	23.8
8	8	24.400	23.8	25.0
9	9	24.450	23.8	25.6
10	10	25.725	25.0	26.8

H.8. ROBINSON CONTINUOUS RECORDERS: CENTIGRADE

LOCATION=DISCHARGE MONTH=6 YEAR=75

OBS	DAY	MEAN	LOW	HIGH
1	1			
2	2			
3	3			
4	4			
5	5			
6	6			
7	7			
8	8			
9	9			
10	10			
11	11			
12	12	40.0000	40.0	40.0
13	13	39.0000	38.0	41.0
14	14	40.0000	40.0	41.0
15	15	40.0000	37.0	41.0
16	16	40.0000	40.0	41.0
17	17	41.0000	40.0	41.0
18	18	41.0000	40.0	42.0
19	19	41.0000	41.0	42.0
20	20	42.0000	41.0	43.0
21	21	42.0000	41.0	43.0
22	22	42.0000	41.0	43.0
23	23	42.0000	41.0	42.0
24	24	42.0000	41.0	43.0
25	25	42.0000	41.0	43.0
26	26	42.0000	41.0	42.0
27	27	41.0000	40.0	42.0
28	28	42.0000	40.0	43.0
29	29	42.0000	41.0	43.0
30	30	43.0000	42.0	43.0

LOCATION=DISCHARGE MONTH=7 YEAR=75

OBS	DAY	MEAN	LOW	HIGH
1	1			
2	2			
3	3			
4	4			
5	5			
6	6			
7	7			
8	8			
9	9			
10	10			
11	11			
12	12			
13	13			
14	14			
15	15			
16	16			
17	17			
18	18			
19	19			
20	20			
21	21			
22	22			
23	23			
24	24			
25	25	40.3500	40.0	40.6
26	26	40.3700	40.0	41.8
27	27	41.1000	38.8	41.8
28	28	40.9250	40.0	41.8
29	29	40.8250	40.0	42.4
30	30	40.8250	40.0	41.8
31	31	41.0000	40.0	42.4

LOCATION=DISCHARGE MONTH=8 YEAR=75

OBS	DAY	MEAN	LOW	HIGH
1	1	41.2750	40.6	41.8
2	2	41.6250	40.6	42.4
3	3	41.4500	39.4	42.4
4	4	41.5000	40.6	42.4
5	5	41.8500	41.2	42.4
6	6	41.5250	41.2	42.4
7	7	41.0250	40.0	41.8
8	8	40.6250	40.0	41.8
9	9	41.5750	41.2	42.4
10	10	41.9565	40.0	42.4
11	11			
12	12			
13	13			
14	14	41.9043	41.2	42.4
15	15	41.6000	41.2	41.8
16	16	41.6000	41.2	41.8
17	17	42.5500	40.0	41.8
18	18			
19	19			
20	20			
21	21			
22	22			
23	23			
24	24			
25	25			
26	26	44.0000	43.0	44.0
27	27	42.0000	37.0	44.0
28	28	43.0000	42.0	44.0
29	29	43.0000	43.0	44.0
30	30	43.0000	43.0	44.0
31	31	43.0000	43.0	44.0

LOCATION=DISCHARGE YEAR=75 MONTH=9

OBS	DAY	MEAN	LOW	HIGH
1	1	43.0000	42.0	44.0
2	2	43.0000	42.0	43.0
3	3	43.0000	42.0	44.0
4	4	41.0000	35.0	43.0
5	5	42.4857	42.4	43.0
6	6	41.9250	40.6	42.4
7	7	41.4000	40.6	42.4
8	8	41.9500	40.6	43.0
9	9	41.7750	41.2	42.4
10	10	41.3250	40.6	41.8
11	11	41.3750	40.6	41.8
12	12	40.8000	40.6	41.2
13	13	39.6250	39.4	40.6
14	14	37.9250	35.8	39.4
15	15	37.8750	37.0	38.2
16	16	37.8750	37.0	38.2
17	17	37.4500	37.0	38.2
18	18	36.7750	36.4	37.6
19	19	36.8750	36.4	37.6
20	20	37.3500	37.0	38.2
21	21	31.9250	29.2	37.6
22	22	32.4000	28.6	37.6
23	23			
24	24			
25	25			
26	26	38.7250	37.6	39.4
27	27	37.8750	37.0	38.8
28	28	36.9500	34.6	38.2
29	29	36.8750	36.4	37.6
30	30	36.6000	35.8	37.6

LOCATION=DISCHARGE YEAR=75 MONTH=10

OBS	DAY	MEAN	LOW	HIGH
1	1	37.2750	35.8	38.2
2	2	37.3750	37.0	38.2
3	3	35.8500	35.2	37.0
4	4	34.8500	34.6	35.2
5	5	33.7750	31.6	34.6
6	6	35.0000	34.0	36.4
7	7	35.5000	34.0	36.4
8	8	35.4000	34.6	36.4
9	9	35.7250	34.6	37.0
10	10	36.1500	35.8	37.0
11	11	35.6091	35.2	36.4
12	12	35.4571	33.4	36.4
13	13	36.0000	35.2	37.0
14	14	36.0750	35.2	37.0
15	15	36.2000	35.2	37.0
16	16	36.4000	35.8	37.0
17	17	35.7750	35.2	36.4
18	18	35.1750	33.4	35.8
19	19	25.6750	23.8	31.6
20	20	33.6750	28.6	35.2
21	21	34.1500	33.4	35.2
22	22	33.8250	33.4	34.6
23	23	34.6250	33.4	36.4
24	24	35.2250	34.6	35.8
25	25	35.4250	34.6	35.8
26	26	35.9000	35.2	36.4
27	27	35.2000	34.6	36.4
28	28	35.5000	33.4	35.8
29	29	35.3750	34.6	35.8
30	30	34.1500	33.4	34.6
31	31	32.9750	32.2	33.4

LOCATION=DISCHARGE YEAR=75 MONTH=11

OBS	DAY	MEAN	LOW	HIGH
1	1	25.4636	23.8	31.0
2	2	24.4429	23.8	27.4
3	3			
4	4			
5	5			
6	6			
7	7			
8	8			
9	9			
10	10			
11	11	23.8800	23.2	25.0
12	12	23.7000	23.2	24.4
13	13	22.4800	21.4	23.2
14	14	21.3000	20.2	22.0
15	15	20.5250	19.6	21.4
16	16	19.7500	19.0	21.4
17	17	19.5000	18.4	21.4
18	18	19.3500	18.4	21.4
19	19	19.0000	17.8	20.8
20	20	18.9000	17.8	20.2
21	21	18.2000	17.8	19.0
22	22	17.3750	16.6	17.8
23	23	16.0250	15.4	16.6
24	24	15.4522	14.8	16.0
25	25	15.6500	15.4	16.6
26	26	15.3000	14.8	16.0
27	27	14.7000	14.2	15.4
28	28	13.2000	11.8	14.8
29	29	12.6000	12.4	13.0
30	30	12.6750	11.8	13.6

LOCATION=DISCHARGE YEAR=75 MONTH=12

OBS	DAY	MEAN	LOW	HIGH
1	1	13.4500	12.4	14.8
2	2	14.4750	13.6	17.8
3	3	14.6500	13.6	16.0
4	4	14.8000	14.2	16.6
5	5	14.2000	13.0	15.4
6	6	13.6750	13.0	14.8
7	7	14.1750	13.0	14.8
8	8	13.6000	12.4	14.2
9	9	13.7750	12.4	14.8
10	10	13.0250	11.8	14.2
11	11	15.3500	13.0	19.0
12	12	14.1250	13.6	14.8
13	13	16.5500	14.2	17.8
14	14	17.8000	16.6	19.0
15	15	19.1300	18.4	20.2
16	16	19.2250	18.4	20.2
17	17	20.8000	15.4	22.6
18	18	16.4000	14.2	20.8
19	19	21.1714	20.2	22.0
20	20	20.9200	20.2	21.4
21	21	18.1500	12.4	20.2
22	22	19.4000	18.4	20.2
23	23	19.7750	19.6	20.2
24	24	20.8000	20.2	21.4
25	25	20.7250	20.2	21.4
26	26	20.8261	20.2	21.4
27	27	20.5000	19.6	21.4
28	28	16.3130	11.8	20.8
29	29	19.4000	11.8	24.4
30	30	22.8870	21.4	23.8
31	31	21.4250	20.8	22.0

LOCATION=DISCHARGE YEAR=76 MONTH=1

OBS	DAY	MEAN	LOW	HIGH
1	1	21.4522	20.8	22.0
2	2	22.0000	20.8	23.2
3	3	21.9478	21.4	23.2
4	4	20.6250	17.8	22.0
5	5	20.9125	20.2	21.4
6	6	22.6857	20.8	23.8
7	7	23.6500	22.6	23.8
8	8	23.4000	22.0	23.8
9	9	20.5750	11.8	24.4
10	10	23.0500	22.0	23.8
11	11	23.1500	22.6	23.8
12	12	23.5750	23.2	24.4
13	13	23.9750	23.2	24.4
14	14	12.2000	10.6	23.8
15	15	10.3750	9.4	10.6
16	16	10.2250	10.0	10.6
17	17	11.2250	10.6	11.8
18	18	12.9250	10.6	20.8
19	19	21.8400	21.4	22.0
20	20	21.4250	21.4	22.0
21	21	21.9500	21.4	22.6
22	22	21.2250	20.2	21.4
23	23	21.7000	21.4	22.6
24	24	21.8250	21.4	22.6
25	25	22.8250	19.0	23.8
26	26	22.7750	21.4	23.8
27	27	23.4750	22.6	25.0
28	28	23.8000	22.6	25.6
29	29	24.7250	23.2	26.2
30	30	24.3500	22.6	26.8
31	31	26.1000	25.0	26.8

LOCATION=DISCHANGE YEAR=76 MONTH=2

OBS	DAY	MEAN	LOW	HIGH
1	1	24.9250	23.2	25.6
2	2	24.1000	23.2	25.0
3	3			
4	4			
5	5	25.3429	23.2	26.8
6	6	22.7143	22.6	23.2
7	7	23.2000	22.6	23.8
8	8	22.8500	22.0	23.8
9	9	23.0000	22.0	23.8
10	10	23.2250	22.6	23.8
11	11	23.4000	22.6	23.8
12	12	23.6250	22.6	24.4
13	13	24.2500	23.8	25.0
14	14	24.6500	23.8	25.6
15	15	25.4750	24.4	26.2
16	16	24.7545	23.8	25.0
17	17	25.5500	25.0	26.8
18	18	25.9000	25.0	26.8
19	19	26.9750	26.2	27.4
20	20	27.8500	26.8	29.2
21	21	28.1500	26.8	28.6
22	22	26.7500	22.6	28.0
23	23	27.4750	26.8	28.0
24	24	27.4750	26.8	28.0
25	25	27.4000	26.2	28.0
26	26	27.5250	27.4	28.0
27	27	28.1750	27.4	29.8
28	28	29.2000	28.0	30.4
29	29	28.6500	26.2	29.8

LOCATION=DISCHANGE YEAR=76 MONTH=3

OBS	DAY	MEAN	LOW	HIGH
1	1	29.4000	28.6	31.0
2	2	29.8750	28.6	30.4
3	3	30.0500	28.6	31.6
4	4	30.4500	29.2	31.6
5	5	29.4000	28.6	30.4
6	6	30.7250	29.8	31.6
7	7	31.6500	29.2	32.8
8	8	31.9750	31.0	32.2
9	9	30.8750	30.4	32.2
10	10	30.8250	29.8	31.6
11	11	30.7250	29.8	31.6
12	12	30.6500	30.4	31.0
13	13	29.9750	29.2	31.0
14	14	28.6750	26.8	29.8
15	15	29.1000	28.0	29.8
16	16	28.1000	26.8	29.2
17	17	28.1250	27.4	28.6
18	18	27.5000	26.2	28.6
19	19	27.7250	26.2	28.6
20	20	27.5500	26.2	28.6
21	21	27.5750	25.0	28.6
22	22	27.9000	27.4	28.6
23	23	25.7000	19.0	28.6
24	24	28.6000	27.4	29.8
25	25	28.0500	27.4	28.6
26	26	29.0250	27.4	30.4
27	27	28.6750	28.6	29.2
28	28	29.7000	28.6	31.0
29	29	30.9077	29.8	31.0
30	30	30.6571	29.8	31.0
31	31	28.9000	19.6	31.0

LOCATION=DISCHANGE YEAR=76 MONTH=4

OBS	DAY	MEAN	LOW	HIGH
1	1	28.2000	22.0	31.0
2	2	30.7750	29.8	31.0
3	3	30.6750	29.8	31.6
4	4	24.6750	20.2	31.0
5	5	26.0250	23.8	29.8
6	6	30.6000	29.8	31.0
7	7	31.0500	30.4	32.2
8	8	30.7500	30.4	31.0
9	9	30.7250	29.8	31.6
10	10	30.6500	29.8	31.0
11	11	30.6250	29.8	31.0
12	12	30.2957	28.6	31.0
13	13	30.9000	30.4	31.6
14	14	30.4500	29.8	31.0
15	15	30.6000	30.4	31.0
16	16	30.8000	30.4	31.6
17	17	30.8250	22.6	32.2
18	18	32.5750	25.6	34.0
19	19	33.0500	32.8	33.4
20	20	32.8250	32.2	33.4
21	21	32.9750	31.6	33.4
22	22	33.5250	32.2	34.6
23	23	35.1250	34.0	35.8
24	24	34.8500	32.2	35.8
25	25	33.9250	33.4	34.6
26	26	34.0500	22.0	35.2
27	27	34.4696	33.4	35.2
28	28	34.6250	33.4	35.8
29	29	34.5000	33.4	35.2
30	30	34.1000	33.4	34.6

LOCATION=DISCHANGE YEAR=76 MONTH=5

OBS	DAY	MEAN	LOW	HIGH
1	1	24.825	22.6	33.4
2	2	24.200	23.2	29.8
3	3	32.875	31.0	34.0
4	4	33.000	31.6	34.0
5	5	33.100	32.2	34.0
6	6	33.050	32.2	33.4
7	7	33.325	32.8	34.0
8	8	33.425	32.8	34.0
9	9	34.075	31.0	35.2

H.B. ROBINSON CONTINUOUS RECORDERS: CENTIGRADE

LOCATION=STATION F MONTH=6 YEAR=75

OBS	DAY	MEAN	LOW	HIGH
1	1			
2	2			
3	3			
4	4			
5	5			
6	6			
7	7			
8	8			
9	9			
10	10			
11	11			
12	12	31.0000	29.0	32.0
13	13	31.0000	30.0	34.0
14	14	32.0000	29.0	36.0
15	15	33.0000	31.0	35.0
16	16	31.0000	27.0	34.0
17	17	33.0000	31.0	35.0
18	18	33.0000	30.0	35.0
19	19	29.0000	26.0	31.0
20	20	34.0000	31.0	36.0
21	21	32.0000	29.0	34.0
22	22	33.0000	30.0	35.0
23	23	33.0000	31.0	35.0
24	24	34.0000	32.0	35.0
25	25	34.0000	32.0	37.0
26	26	35.0000	31.0	36.0
27	27	34.0000	32.0	35.0
28	28	32.0000	31.0	33.0
29	29	32.0000	31.0	35.0
30	30	33.0000	31.0	34.0

LOCATION=STATION F MONTH=7 YEAR=75

OBS	DAY	MEAN	LOW	HIGH
1	1			
2	2			
3	3			
4	4			
5	5			
6	6			
7	7			
8	8			
9	9			
10	10			
11	11			
12	12			
13	13			
14	14			
15	15			
16	16			
17	17			
18	18			
19	19	22.0857	21.4	23.2
20	20	22.5400	21.4	23.8
21	21	22.8400	21.4	23.8
22	22	23.5714	22.6	23.8
23	23	25.1714	23.8	26.8
24	24	26.2545	23.8	28.6
25	25	27.8800	25.0	32.8
26	26	25.7200	24.4	28.6
27	27	26.1100	25.0	27.4
28	28	28.2842	24.4	32.2
29	29	30.7750	25.0	32.8
30	30	31.2000	25.6	33.4
31	31	33.9250	32.2	35.8

LOCATION=STATION F MONTH=8 YEAR=75

OBS	DAY	MEAN	LOW	HIGH
1	1	34.9667	32.2	36.4
2	2	36.1176	34.6	37.0
3	3	36.5059	35.8	37.0
4	4	36.5125	35.8	37.0
5	5	36.2000	35.8	37.0
6	6	33.0348	27.4	36.4
7	7	30.3750	28.6	32.8
8	8	28.8000	27.4	30.4
9	9	26.9500	26.2	29.8
10	10	26.3000	25.0	29.2
11	11	26.0000	25.0	28.6
12	12			
13	13			
14	14			
15	15			
16	16			
17	17	31.0000	29.0	35.0
18	18	32.0000	31.0	33.0
19	19	32.0000	30.0	34.0
20	20	31.0000	29.0	32.0
21	21	30.0000	29.0	32.0
22	22	30.0000	29.0	31.0
23	23	32.0000	31.0	34.0
24	24	32.0000	31.0	33.0
25	25	32.0000	30.0	33.0
26	26	32.0000	30.0	35.0
27	27	35.0000	33.0	36.0
28	28	32.0000	29.0	35.0
29	29	30.0000	28.0	31.0
30	30	31.0000	28.0	33.0
31	31	33.0000	31.0	34.0

LOCATION=STATION F YEAR=75 MONTH=9

OBS	DAY	MEAN	LOW	HIGH
1	1			
2	2			
3	3			
4	4			
5	5	36.9250	36.4	37.0
6	6	36.2250	35.2	37.0
7	7	34.0250	32.8	35.8
8	8	34.0500	32.2	36.4
9	9	35.6750	34.6	37.0
10	10	34.5250	33.4	35.8
11	11	34.2500	33.4	35.8
12	12	33.9750	32.8	35.2
13	13	30.2000	28.0	33.4
14	14	27.4750	25.6	29.2
15	15	26.4750	24.4	28.6
16	16	29.0000	28.0	29.8
17	17	28.5217	27.4	29.8
18	18	28.4250	26.8	30.4
19	19	29.3000	28.6	31.0
20	20	30.5750	28.6	32.8
21	21	31.5250	30.4	33.4
22	22	29.9125	28.6	31.0
23	23			
24	24			
25	25			
26	26			
27	27			
28	28			
29	29			
30	30	23.2600	20.8	25.6

LOCATION=STATION F YEAR=75 MONTH=10

OBS	DAY	MEAN	LOW	HIGH
1	1	27.6000	26.2	28.6
2	2	27.6750	23.8	29.8
3	3	21.2500	19.6	25.0
4	4	22.7500	20.8	26.2
5	5	23.5000	21.4	25.0
6	6	25.9750	22.6	29.8
7	7	28.4000	27.4	29.8
8	8	28.1750	26.8	29.8
9	9	28.0000	26.2	29.2
10	10	27.2000	25.6	29.2
11	11	28.8250	27.4	30.4
12	12	28.3250	26.2	31.0
13	13	28.5182	26.2	29.8
14	14	29.7000	27.4	31.0
15	15	29.6500	28.6	31.0
16	16	29.8750	28.6	31.0
17	17	28.2750	26.8	30.4
18	18	27.4250	26.2	29.2
19	19	24.9250	22.6	26.2
20	20	21.5000	20.2	22.6
21	21	23.1500	18.4	27.4
22	22	25.9750	23.8	27.4
23	23	25.8750	24.4	28.0
24	24	25.2000	24.4	26.2
25	25	26.6500	23.8	29.2
26	26	27.0750	26.2	28.0
27	27	25.0250	23.8	27.4
28	28	26.8500	25.6	28.6
29	29	27.3000	26.2	28.6
30	30	23.4000	19.0	27.4
31	31	20.4000	17.2	23.2

LOCATION=STATION F YEAR=75 MONTH=11

OBS	DAY	MEAN	LOW	HIGH
1	1	20.5500	19.0	22.0
2	2	19.2750	17.8	20.8
3	3	18.6250	16.6	20.2
4	4	20.6750	20.2	22.0
5	5	21.6250	20.2	23.8
6	6	20.8000	19.6	21.4
7	7	20.4000	20.2	20.8
8	8	21.0000	19.0	23.2
9	9	21.1500	19.6	22.0
10	10	21.6727	20.8	22.6
11	11	20.3750	19.6	20.8
12	12	19.6750	19.0	20.2
13	13	17.6250	16.0	19.6
14	14	13.9000	11.8	16.0
15	15	11.0000	10.6	11.8
16	16	9.8750	8.8	11.8
17	17	9.9500	8.2	13.0
18	18	10.5250	8.8	13.6
19	19	12.3000	10.0	15.4
20	20	13.2000	10.6	14.2
21	21	13.4250	11.6	14.2
22	22	10.5000	9.4	11.2
23	23	8.7000	8.2	9.4
24	24	9.2091	7.6	10.6
25	25	9.7500	9.4	10.6
26	26	9.2957	8.8	9.4
27	27	10.2250	9.4	12.4
28	28	10.3250	9.4	11.8
29	29	9.8250	9.4	11.2
30	30	10.0250	9.4	11.2

LOCATION=STATION F YEAR=75 MONTH=12

OBS	DAY	MEAN	LOW	HIGH
1	1	11.0435	10.6	11.8
2	2	10.2000	9.4	11.2
3	3	10.0250	9.4	11.2
4	4	9.4750	7.6	11.2
5	5	9.8500	8.8	11.2
6	6	10.7304	9.4	12.4
7	7	11.5000	10.6	13.0
8	8	9.8250	8.2	11.2
9	9	8.1217	7.6	8.2
10	10	7.1750	7.0	7.6
11	11	6.6087	5.8	7.0
12	12	6.7500	6.4	7.6
13	13	6.4783	5.2	8.2
14	14	7.2750	5.2	13.6
15	15	11.8261	9.4	13.6
16	16	13.3750	11.8	16.0
17	17	11.0696	9.4	11.8
18	18	8.6500	7.0	11.2
19	19	6.9739	5.8	9.4
20	20	6.0250	4.6	9.4
21	21	4.6261	3.4	7.6
22	22	3.2957	2.2	3.4
23	23	4.3750	2.8	8.2
24	24	5.7478	3.4	10.0
25	25	5.8750	3.4	9.4
26	26	8.1500	5.8	10.6
27	27	5.9304	4.6	8.8
28	28	6.5750	5.2	9.4
29	29	5.8000	4.6	8.2
30	30	7.4435	4.6	13.0
31	31	7.4750	4.6	11.2

LOCATION=STATION F YEAR=76 MONTH=1

OBS	DAY	MEAN	LOW	HIGH
1	1	7.6750	7.0	8.2
2	2	8.1217	7.0	10.6
3	3	10.6250	7.0	12.4
4	4	7.1250	5.8	12.4
5	5	5.7750	5.2	6.4
6	6	4.2750	3.4	5.8
7	7	3.7750	3.4	5.8
8	8	4.4750	3.4	10.6
9	9	3.3739	2.8	3.4
10	10	3.9500	2.8	5.2
11	11	4.8500	3.4	7.0
12	12	4.5217	3.4	7.0
13	13	7.3500	3.4	13.0
14	14	7.6250	5.8	10.0
15	15	5.8000	5.2	6.4
16	16	5.4870	5.2	5.8
17	17	5.2000	5.2	5.2
18	18	3.4000	2.8	4.0
19	19	3.6087	2.2	5.2
20	20	4.9130	4.0	11.8
21	21	6.0174	4.0	12.4
22	22	4.8455	3.4	10.6
23	23	4.4957	2.8	8.2
24	24	8.1478	4.6	11.2
25	25	10.0783	5.2	14.8
26	26	15.5826	13.0	19.0
27	27	16.7364	15.4	17.8
28	28	12.4000	10.0	16.6
29	29	9.6087	8.2	11.8
30	30	8.0174	7.0	10.6
31	31	6.9217	5.8	8.2

M.B. ROBINSON CONTINUOUS RECORDERS: CENTIGRADE

LOCATION=STATION F YEAR=76 MONTH=2

OBS	DAY	MEAN	LOW	HIGH
1	1	8.1700	6.4	11.2
2	2	6.4000	5.8	7.6
3	3	7.5000	6.4	11.8
4	4	8.5652	6.4	11.8
5	5	12.7500	7.6	19.6
6	6	12.6250	8.2	18.4
7	7	8.4609	8.2	10.0
8	8	8.9000	7.6	11.8
9	9	7.5217	6.4	9.4
10	10	9.3750	5.8	13.0
11	11	11.4000	9.4	13.6
12	12	11.5652	8.2	16.6
13	13	14.7250	11.8	17.8
14	14	16.3391	14.2	18.4
15	15	15.7750	14.2	19.0
16	16	18.8500	16.6	20.8
17	17	17.9250	16.6	19.0
18	18	18.1250	16.6	19.0
19	19	18.5000	16.0	22.0
20	20	18.0750	15.4	21.4
21	21	18.7000	15.4	20.2
22	22	17.7750	14.8	20.2
23	23	13.4250	13.0	14.8
24	24	15.8000	12.4	19.6
25	25	18.9250	16.0	20.8
26	26	20.0500	17.8	22.6
27	27	19.8500	17.2	22.0
28	28	19.9000	17.8	22.0
29	29	21.3739	19.6	23.2

LOCATION=STATION F YEAR=76 MONTH=3

OBS	DAY	MEAN	LOW	HIGH
1	1	22.7250	20.8	25.0
2	2	24.1750	22.0	26.2
3	3	23.9500	22.6	25.6
4	4	24.6250	23.2	26.2
5	5	23.5750	22.6	24.4
6	6	23.1250	21.4	24.4
7	7	21.8000	19.6	25.0
8	8	20.7250	17.8	22.6
9	9	19.4250	14.8	22.0
10	10	14.7750	12.4	20.8
11	11	20.2766	17.8	25.0
12	12	22.1250	21.4	23.8
13	13	19.7000	15.4	21.4
14	14	15.3750	13.6	19.0
15	15	16.1304	13.0	20.8
16	16	15.7750	10.6	20.8
17	17	10.2500	9.4	10.6
18	18	11.9250	9.4	14.2
19	19	13.5250	10.0	17.8
20	20	15.7750	11.8	20.2
21	21	17.4000	16.0	19.0
22	22	15.0182	14.2	16.0
23	23			
24	24			
25	25			
26	26			
27	27			
28	28			
29	29			
30	30	23.2600	21.4	24.4
31	31	23.4000	22.0	25.0

LOCATION=STATION F YEAR=76 MONTH=4

OBS	DAY	MEAN	LOW	HIGH
1	1	21.1000	19.0	24.4
2	2	18.2500	17.8	19.0
3	3	20.3750	16.6	26.2
4	4	22.4000	20.2	23.8
5	5	19.3750	17.8	22.0
6	6	21.4500	19.0	25.0
7	7	23.3750	21.4	25.6
8	8	23.6000	22.0	25.0
9	9	19.3000	17.2	23.8
10	10	18.0250	15.4	21.4
11	11	20.3500	16.6	22.6
12	12	19.8609	16.6	22.6
13	13	22.5250	19.0	25.6
14	14	23.9750	22.6	25.0
15	15	24.7250	22.6	27.4
16	16	25.7500	24.4	27.4
17	17	25.8000	23.8	28.0
18	18	26.3500	25.0	28.6
19	19	27.0250	25.0	29.2
20	20	27.8500	26.2	29.2
21	21	27.4500	26.2	28.0
22	22	27.4750	26.2	28.6
23	23	27.1250	25.0	29.8
24	24	28.3000	27.4	29.8
25	25	26.0174	23.8	27.4
26	26	23.6000	22.0	24.4
27	27	23.2261	21.4	26.2
28	28	23.0750	20.8	25.0
29	29	24.2500	22.0	27.4
30	30	25.3750	23.8	26.8

LOCATION=STATION F YEAR=76 MONTH=5

OBS	DAY	MEAN	LOW	HIGH
1	1	23.975	22.6	26.2
2	2	22.900	22.0	24.4
3	3	21.800	20.8	23.2
4	4	20.350	18.4	23.8
5	5	24.150	20.8	26.8
6	6	25.900	23.8	27.4
7	7	26.425	25.0	28.0
8	8	24.125	22.0	27.4
9	9	23.625	20.8	28.0
10	10	25.625	23.2	28.6

H.B. ROBINSON CONTINUOUS RECORDERS: CENTIGRADE

CP&L EXHIBIT 2.3

Black Creek Water Temperature Data:

Above the Impoundment (US 1) and

Below the Impoundment (SC-23)

1959, 1960, 1972, 1973, 1974

S T A T I S T I C A L A N A L Y S I S S Y S T E M

---------- YEAR=59 ----------

OBS	DAY	TEMP_US1	TEMPSC23
1	62	49	50
2	65	51	58
3	69	52	50
4	72	51	52
5	76	54	56
6	79	52	54
7	83	55	58
8	86	62	64
9	93	56	62
10	97	66	65
11	100	67	70
12	104	52	62
13	107	58	59
14	111	67	63
15	114	57	66
16	118	68	66
17	121	66	70
18	125	68	70
19	128	66	72
20	132	66	74
21	135	63	74
22	139	66	74
23	142	68	74
24	146	68	75
25	149	66	74
26	153	70	74
27	156	66	74
28	160	68	78
29	163	68	78
30	166	66	76
31	170	66	76
32	174	70	76
33	177	72	76
34	181	74	78
35	183	75	81
36	188	68	83
37	191	71	81
38	195	70	80
39	197	72	80
40	202	74	80
41	205	74	81
42	209	74	82
43	212	74	83
44	216	74	83
45	219	74	81
46	223	74	82
47	226	72	82
48	230	75	82
49	233	73	82
50	237	75	82
51	240	75	82
52	244	74	82
53	247	74	82

S T A T I S T I C A L A N A L Y S I S S Y S T E M

---------- YEAR=59 ----------

OBS	DAY	TEMP_US1	TEMPSC23
54	251	72	60
55	254	70	80
56	258	68	77
57	261	66	73
58	265	64	71
59	268	66	71
60	273	69	76
61	275	70	76
62	279	68	74
63	282	71	74
64	286	68	76
65	289	60	70
66	293	56	70
67	296	60	64
68	300	56	60
69	303	56	59
70	307	54	60
71	310	60	64
72	314	48	57
73	315	52	58
74	321	55	59
75	324	42	55
76	328	52	56
77	335	38	48
78	338	44	49
79	342	40	47
80	345	42	48
81	349	48	49
82	352	54	52
83	356	39	39
84	362	50	48
85	365	44	46

---------- YEAR=60 ----------

OBS	DAY	TEMP_US1	TEMPSC23
1	5	44	48
2	8	44	49
3	12	48	48
4	15	54	54
5	19	47	49
6	22	37	44
7	26	36	47
8	29	47	47
9	62	38	41
10	74	41	44
11	77	44	44
12	81	47	47
13	84	49	48
14	88	56	50
15	91	56	54
16	95	60	58

S T A T I S T I C A L A N A L Y S I S S Y S T E M

---------- YEAR=60 ----------

OBS	DAY	TEMP_US1	TEMPSC23
17	98	62	60
18	102	54	58
19	105	65	60
20	109	68	64
21	112	68	67
22	116	72	68

S T A T I S T I C A L A N A L Y S I S S Y S T E M

---------- YEAR=72 ----------

OBS	DAY	TEMP_US1	TEMPSC23
1	6	50	50
2	12	54	60
3	17	34	51
4	26	47	50
5	34	45	54
6	41	40	55
7	48	38	58
8	55	45	55
9	63	55	60
10	68	52	58
11	74	60	65
12	83	53	63
13	88	55	63
14	97	62	64
15	103	64	66
16	109	64	76
17	117	60	71
18	122	61	68
19	130	66	73
20	138	64	77
21	145	66	73
22	151	70	70
23	165	64	82
24	174	68	77
25	179	74	82
26	187	72	82
27	194	74	63
28	200	76	67
29	208	75	86
30	215	76	85
31	220	78	86
32	225	76	86
33	235	74	68
34	244	61	71
35	251	62	79
36	256	58	70
37	264	60	76
38	270	70	74
39	277	60	72
40	286	60	73
41	288	53	63
42	306	54	66
43	310	60	73
44	321	42	52
45	326	48	60
46	332	42	50
47	341	49	56
48	349	51	62
49	354	43	58
50	363	45	52

S T A T I S T I C A L A N A L Y S I S S Y S T E M

---------- YEAR=73 ----------

OBS	DAY	TEMP_US1	TEMPSC23
1	4	49	57
2	12	55	46
3	18	41	49
4	26	43	54
5	32	42	52
6	40	47	55
7	46	45	52
8	53	45	50
9	61	48	55
10	68	59	61
11	75	69	67
12	87	56	61
13	94	65	63
14	102	57	61
15	110	65	65
16	115	67	68
17	123	69	69
18	130	69	72
19	136	63	71
20	143	68	74
21	150	71	79
22	159	67	84
23	165	73	81
24	172	80	85
25	179	74	84
26	186	76	86
27	193	76	88
28	201	74	87
29	214	78	86
30	219	75	87
31	227	78	88
32	233	74	88
33	240	75	85
34	248	77	85
35	255	73	86
36	263	69	83
37	269	72	84
38	275	73	83
39	283	75	83
40	289	71	82
41	296	60	73
42	304	55	67
43	311	53	70
44	317	50	65
45	324	55	67
46	333	58	65
47	339	55	62
48	346	40	56
49	352	38	53
50	365	51	66

S T A T I S T I C A L A N A L Y S I S S Y S T E M

---------- YEAR=74 ----------

OBS	DAY	TEMP_US1	TEMPSC23
3	1	51	53
4	10	50	65
5	17	52	63
6	24	56	63
7	29	58	66
8	39	66	63
9	59	43	56
10	66	61	63
11	72	52	65
12	79	58	64
13	86	50	67
14	94	65	66
15	100	57	65
16	108	63	71
17	115	60	70
18	122	68	80
19	129	63	73
20	137	69	75
21	144	68	79
22	151	72	77
23	158	71	78
24	164	73	82
25	170	72	81
26	179	68	67
27	183	72	81
28	191	73	85
29	198	72	86
30	206	62	84
31	212	76	87
32	226	73	83
33	234	73	85
34	242	74	86
35	249	75	77
36	254	71	81
37	263	65	83
38	269	62	75
39	282	59	72
40	286	61	73
41	289	63	71
42	296	52	67
43	310	61	72
44	313	64	
45	325	54	64
46	331	46	58
47	339	43	55
48	346	50	55
49	352	40	55
50	359	49	57

CP&L EXHIBIT 2.4

CP&L Analytical Methods as of January 1, 1976

Results of Water Chemistry Analyses, and

Recommended Water Quality Goals for Various Water Quality Constituents

March 1973 to February 1976

ANALYTICAL METHODS USED BY THE ANALYTICAL LABORATORY

Parameter	Method of Analysis	Container	Preservation Technique	Holding Time	Routine Laboratory Reporting Limit
Alkalinity, (as $CaCO_3$)	ASTM Standards, pt. 23, 1972, D1067 Method A (Electrometric Titration)-Standard Methods for the Examination of Water and Wastewater 13th Ed., 1971, APHA, Art 102 (potentiometric method for low alkalinity)	P,G	Cool, 4^oC	24 Hrs.	0.5 mg/L
Aluminum (Al) Total	Atomic Absorption Spectrophotometer (Digestion with HNO_3 - HCl)	P,G	Cool, 4^oC HNO to pH < 2	6 Mos.	0.1 mg/L
Aluminum, (Al) Dissolved	Standard Methods for the Examination of Water and Wastewater 13th Ed., 1971, APHA, Art 103B (Eriochrome Cyanine R Method) or filtration through 0.45 micron membrane filter followed by Atomic Absorption methods	P,G	Filtration followed by HNO_3 to pH < 2	6 Mos.	0.1 mg/L
Ammonia, (as N)	Standard Methods for the Examination of Water and Wastewater 13th Ed., 1971, APHA, Art 132-132C (Distillation followed by phenate method or ammonia selection electrode)	P,G	Cool, 4^oC	24 Hrs.	0.02 mg/L
Calcium, (Ca) Total	Atomic Absorption Spectrophotometer (Digestion with HNO_3-HCl)	P,G	Cool, 4^oC HNO_3 to pH < 2	6 Mos.	0.05 mg/L
Chemical Oxygen Demand, (COD)	Standard Methods for the Examination of Water and Wastewater 13th Ed., 1971, APHA, Art 220	P,G	H_2SO_4 to pH < 2	7 Days	1.0 mg/L

arameter	Method of Analysis	Container	Preservation Technique	Holding Time	Routine Laboratory Reporting Limit
hloride, (Cl^-)	ASTM Standards, pt. 23, 1972, D512, Reference Method A (mercuric Nitrate Titration)	P,G	Cool, 4^oC	7 Days	0.25 mg/L
hromium, (Cr^{+6}) Hexavalent	Standard Methods for the Examination of Water and Wastewater 13th Ed., 1971, APHA, Art 117A (s-diphenyl-carbazide method)	P,G	Cool, 4^oC	72 Hrs.	0.05 mg/L
opper, (Cu) Total	Method for Collection and Analysis of Water Samples for Dissolved Minerals and Gases, BK.5, Ch. A-1, Techniques of Water-Resources Investigations of the United States Geological Survey, pp. 83-85 (Atomic absorption methods-direct or chelation - extraction)	P,G	Cool, 4^oC HNO_3, pH < 2	6 Mos.	0.05 mg/L
opper, (Cu) Dissolved	Methods for Collection and Analysis of Water Samples for Dissolved Minerals and Gases, BK.5, Ch. A-1, Techniques of Water-Resources Investigations of the United States Geological Survey, pp. 83-85 (Filtration through 0.45 micron filter followed by atomic absorption methods - direct or chelation-extraction)	P,G	Filtration followed by HNO_3 to pH < 2	6 Mos.	0.05 mg/L
ardness, (as $CaCO_3$)	Standard Methods for the Examination of Water and Wastewater 13th Ed., 1971, APHA 122B (EDTA Titrimetric Method)	P,G	Cool, 4^oC	7 Days	2.0 mg/L
ron, (Fe) Total	Atomic Absorption Spectrophotometer (Digestion with HNO_3-HCl)	P,G	Cool, 4^oC HNO_3 to pH < 2	6 Mos.	0.05 mg/L

rameter	Method of Analysis	Container	Preservation Technique	Holding Time	Routine Laboratory Reporting Limit
ad, (Pb) Total	Methods for Collection and Analysis of Water Samples for Dissolved Minerals and Gases, BK.5, Ch. A-1, Techniques of Water-Resources Investigations of the United States Geological Survey, pp. 105-106 (Atomic absorption methods - direct or chelation - extraction)	P,G	Cool, $4^{o}C$ HNO_3 to pH < 2	6 Mos.	0.05 mg/L
gnesium, (Mg) Total	Atomic Absorption Spectrophotometer (Digestion with HNO_3-HCl)	P,G	Cool, $4^{o}C$ HNO_3 to pH < 2	6 Mos.	0.05 mg/L
nganese, (Mn) Total	Atomic Absorption Spectrophotometer (Digestion with HNO_3-HCl)	P,G	Cool, $4^{o}C$ HNO_3 to pH < 2	6 Mos.	0.05 mg/L
rcury, (Hg) Total	Methods for Chemical Analysis of Water and Waste, 1971, EPA, pp. 121-130 (Coldvapor technique)	P,G	Cool, $4^{o}C$ HNO_3 to pH < 2	1 Mo.	0.001 mg/L
ckel, (Ni) Total	Method for Collection and Analysis of Water Samples for Dissolved Minerals and Gases, BK.5, Ch. A-1, Techniques of Water-Resources Investigations of the United States Geological Survey, pp. 115-116 (Atomic absorption methods - direct or chelation - extraction)	P,G	Cool, $4^{o}C$ HNO_3 to pH < 2	6 Mos.	0.05 mg/L

rameter	Method of Analysis	Container	Technique	Time	Reporting Limit
ckel, (Ni) Dissolved	Method for Collection and Analysis of Water Samples for Dissolved Minerals and Gases, BK.5, Ch. A-1, Techniques of Water-Resources Investigations of the United States Geological Survey, pp. 115-116 (Filtration through 0.45 micron filter followed by atomic absorption methods-direct or chelation - extraction)	P,G	Filtration followed by HNO_3 to pH < 2	6 Mos.	0.05 mg/L
trate (as N)	Methods for Chemical Analysis of Water and Wastes, 1971, EPA, pp. 170-174 (Brucine-Sulfate Method)	P,G	Cool to 4°C H_2SO_4 to pH < 2	24 Hrs.	0.05 mg/L
trogen, (N)	Standard Methods for the Examination of Water and Wastewater 13th Ed., 1971, APHA Art 135, 132C- Digestion and distillation followed by phenate method or ammonia select-ion electrode (Ammonia Nitrogen plus Organic Nitrogen = Total or Kjeldahl Nitrogen)	P,G	Cool to 4°C H_2SO_4 to pH < 2	24 Hrs.	0.02 mg/L
thophosphate, (as P) Total Dissolved	Standard Methods for the Examination of Water and Wastewater 13th ed., 1971, APHA, Art 223 (Filtration followed by Ascorbic Acid Method)	P,G	Filtration Cool to 4°C	24 Hrs.	0.01 mg/L

ırameter	Method of Analysis	Container	Preservation Technique	Holding Time	Routine Laboratory Reporting Limit
rthophosphate, (as P) Total	Standard Methods for the Examination of Water and Wastewater, 13th Ed., 1971, APHA, Art 223 (Ascorbic Acid Method)	P,G	Cool to $4^{o}C$	24 Hrs.	0.01 mg/L
·l	Methods for Chemical Analysis of Water and Wastes, 1971, EPA pp. 230-231 (Electrometric)	P,G	Cool to $4^{o}C$	6 Hrs.	0.1 pH
nosphate, (as P)	Standard Methods for the Examination of Water and Wastewater, 13th Ed., 1971, APHA, Art 223 (Filtration and Persulfate Digestion followed by Ascorbic Acid Method)	P,G	Filtration Cool to $4^{o}C$	24 Hrs.	0.01 mg/L
hosphate, (as P) Total	Standard Methods for the Examination of Water and Wastewater 13th Ed., 1971, APHA, Art 223 (Persulfate Digestion followed by Ascorbic Acid Method)	P,G	Cool to $4^{o}C$	24 Hrs.	0.01 mg/L
ilica, (as SiO_2) Dissolved	Standard Methods for the Examination of Water and Wastewater, 13th Ed., 1971, APHA, Art 151B-151C (Heteropoly Blue Method)	P only	Cool to $4^{o}C$	7 Days	1.0 mg/L
odium, (Na) Total	Atomic Absorption Spectrophotometer (Digestion with HNO_3-HCl)	P,G	Cool to $4^{o}C$ HNO_3 to pH < 2	6 Mos.	0.05 mg/L
olids, Total Dissolved (Filterable)	Methods for Chemical Analysis of Water and Wastes, 1971, EPA, pp. 275-277 (Glass Fiber Filtration Method, $180^{o}C$) - Data reported below 10 mg/liter for all solids is not really significant, but indicates order of magnitude	P,G	Cool to $4^{o}C$	7 Days	1.0 mg/L

ırameter	Method of Analysis	Container	Technique	Time	Reporting Limit
›lids, Total Suspended (non-filterable)	Methods for Chemical Analysis of Water and Wastes, 1971, EPA, pp. 278-279 (Glass Fiber Filtration Method, 103-105°C)	P,G	Cool to 4°C	7 Days	1.0 mg/L
;olids, Total Volatile	Methods for Chemical Analysis of Water and Wastes, 1971, EPA, pp. 282-283 (Gravimetric Method, 550°C)	P,G	Cool to 4°C	7 Days	1.0 mg/L
›lids, Total	Methods for Chemical Analysis of Water and Wastes, 1971, EPA, pp. 280-281 (Gravimetric Method, 103-105°C)	P,G	Cool to 4°C	7 Days	1.0 mg/L
ılfate	ASTM Standards, pt. 23, 1972, D516, Reference Method A (Turbidimetric Method)	P,G	Cool to 4°C	7 Days	1.0 mg/L
nnin & Lignin	Standard Methods for the Examination of Water and Wastewater 13th Ed., 1971, APHA, Art 160	P,G	Cool to 4°C	7 Days	0.1 mg/L
ırbidity	Methods for Chemical Analysis of Water and Wastes, USEPA, pg. 295 (Nephelometric measurement)	P,G	Cool to 4°C	7 Days	0.1 NTU
inc, (Zn) Dissolved	Atomic Absorption Spectrophotometer (Filtration through 0.45 micron filter)	P,G	Filtration followed by HNO_3 pH < 2	6 Mos.	0.05 mg/L
inc, (Zn) Total	Atomic Absorption Spectrophotometer (Digestion with HNO_3-HCl)	P,G	Cool, 4°C HNO_3 pH < 2	6 Mos.	0.05 mg/L

CAROLINA POWER & LIGHT COMPANY
SPECIAL SERVICES DEPARTMENT

ROBINSON WATER CHEMISTRY

FIELD PH

MONTH/STATION	AS	AB	ES	EB	GS	GE	HS	IS	JS	KS
73										
04										
05										
06										
07										
08										
09	5.9	5.5	5.8	5.5	5.2	4.8	5.8	5.6		
10	6.1	6.1	6.3	5.8	5.5	5.4	5.7	5.4		
11	6.0	5.7	6.0	5.7	5.7	5.8	6.0			
12	5.8	5.8	5.8	5.8	5.2	5.1	5.8	5.0		
74										
01	4.6	4.4	4.5	4.5	4.4	4.6	4.4	4.4		
02										
03	5.0	5.4	5.0	5.0	5.0	5.0		5.0		
04			5.6	5.4	5.5	5.3	5.3			
05	5.7	5.6	4.7	4.7	5.5	5.7	6.2	6.6		
06										
07	5.1	5.6	5.1	5.4	5.6	5.1	5.5	5.2		
08										
09	4.5	4.2	4.1	4.6	4.9	5.1	6.7	4.4	5.4	5.4
10	5.4	5.2	5.8	5.3	5.5	5.4	4.8	4.8	5.5	5.0
11	4.6	4.9	5.4	5.5	5.5	5.4	5.5	5.4	5.5	5.3
12	4.5	4.5	4.6	4.7	4.1	3.9	4.2	4.2		4.0
75										
01	5.7	5.4	5.5	5.3	4.9	5.0	5.4			5.5
02	5.1	5.1	5.1	5.1	4.5	4.8	5.0	4.7		4.9
03	5.1	5.1	5.1	5.0	5.0	4.9	5.0	4.7		5.0
04	4.8	4.9	4.8	4.9	4.8	4.8	4.8	4.4		4.8
05										
06	5.7	5.6	5.6	5.6	5.5	5.4	4.9	4.4		5.9
07	6.1	5.9	5.9	6.1	6.0	5.5	5.8	6.6		5.8
08	5.7	5.6	5.4	5.4	5.4	5.4	5.4	5.2		5.3
09	5.5	5.4	5.4	5.5	5.5	5.5	5.4	5.2		4.9
10	6.0	5.2	5.5	5.2	6.3	5.4	5.2	5.0		5.2
11	5.5	5.1	5.5	5.4	5.1	5.3	5.0	5.2		5.4
12	5.4	4.9	4.8	5.0	4.8	4.9	4.8	4.9		4.8
76										
01	5.3	5.4	5.3	5.2	4.6	4.6	5.0	4.8		5.0
02	5.4	5.0	5.2	5.2	5.1	5.2	4.9	5.1		4.9

CAROLINA POWER & LIGHT COMPANY
SPECIAL SERVICES DEPARTMENT

ROBINSON WATER CHEMISTRY

KJELDAHL NITROGEN-AS N (NEGATIVE SIGN SHOULD BE READ AS "LESS THAN")

MONTH/STATION	AS	AB	ES	EB	GS	GB	HS	IS	JS	KS
3										
04	0.22	0.22	0.22	0.22	0.22	0.22	0.22	0.22		
05	0.28	0.62	0.17	0.28	0.56	0.17	0.34	0.34		
06	0.20	0.90	0.90	0.20	0.54	0.31	0.43	0.31		
07	0.56	0.56	0.45	0.45	0.34	0.22	0.45	0.34		
08	1.34	0.18	0.56	0.15	1.60	0.85	4.33	1.02		
09	0.30	0.42	0.40	0.50	0.40	0.29	0.30	0.44		
10	0.46	0.29	0.46	0.48	0.23	0.37	0.19	0.17		
11	0.24	0.29	0.14	0.19	0.40	0.21	0.38	0.25		
12	0.50	0.45	0.48	0.49	0.31	0.36	0.50	0.31		
4										
01	0.39	0.49	0.41	0.36	0.34	0.71	0.17	0.38		
02	0.35	0.33	0.34	0.17	0.36	0.46	0.41	0.10		
03	0.38	0.41	0.40	0.30	0.27	0.29	0.31	0.30		
04	0.24	0.04	0.22	0.22	0.22	0.40	0.04	0.30		
05	0.07	0.13	0.13	0.07	0.07	0.02	0.09	0.06		
06	0.40	0.25	0.13	0.25	0.17	0.17	0.23	0.34		
07										
08	0.11	0.67	3.13	0.11	0.56	4.70	0.34	0.34		
09	0.49	0.22	0.20	0.46	0.18	-0.1	-0.1	-0.1	0.16	0.12
10		0.39		0.38	0.36	0.64	0.41	0.26	0.20	0.30
11	0.09	0.15	0.10	0.13	0.08	0.11	0.10	0.06	0.06	0.09
12	0.15	0.14	0.14	0.16	0.13	0.15	0.11	0.11		0.14
5										
01	0.14	0.12	0.11	0.12	0.15	0.15	0.11	0.93		0.13
02	0.09	0.08	0.08	0.09	0.11	0.22	0.11	0.10		0.11
03	0.24	0.22	0.24	0.24	0.72	1.10	0.15	0.12		0.18
04	0.07	0.05	0.05	0.05	0.10	0.06	0.04	0.05		0.05
05	0.34	0.35	0.62	0.21	0.31	0.17	0.19	0.26		0.39
06	0.19	0.22	0.20	0.21	0.22	0.26	0.27	0.35		1.78
07	0.45	0.68	0.63	0.60	0.68	0.27	0.29	0.53		0.27
08	0.80	0.56	0.27	0.29	0.35	0.29	0.29	0.37		0.27
09	0.32	0.42	0.30	0.33	0.32	0.29	0.16	0.15		0.20
10	0.35	0.40	0.42	0.24	0.24	0.22	0.24	0.23		0.25
11	0.09	0.10	0.10	0.09	0.09	0.10	0.10	0.10		0.10
12	0.24	0.31	0.25	0.25	0.22	0.17	0.27	0.19		0.29
76										
01	0.49	0.40	0.26	0.28	0.29	0.22	0.57	0.26		0.47
02	0.25	0.18	0.16	0.27	0.15	0.14	0.15	0.11		0.11

CAROLINA POWER & LIGHT COMPANY
SPECIAL SERVICES DEPARTMENT

ROBINSON WATER CHEMISTRY

NITRATE-AS N (NEGATIVE SIGN SHOULD BE READ AS "LESS THAN")

MONTH/STATION	AS	AB	ES	EB	GS	GB	HS	IS	JS	KS
73										
04	0.06	0.08	0.05	0.05	0.03	0.03	0.03	0.05		
05	0.05		0.06	0.02	0.02	0.03	0.02	0.05		
06	-0.01	-0.01	-0.01	-0.01	-0.01	-0.01	-0.01	0.01		
07	0.07	0.07	0.08	0.07	0.06	0.09	0.06	0.05		
08	0.19	0.14	0.14	0.18	0.14	0.14	0.11	0.50		
09	0.15	0.12	0.13	0.16	0.12	0.09	0.16	0.22		
10	0.06	0.06	0.05	0.04	0.04	0.04	0.04	0.07		
11	0.12	0.05	0.05	0.11	0.19	0.05	0.07	0.10		
12	0.10	0.08	0.15	0.12	-0.01	-0.01	0.10	-0.01		
74										
01	0.21	0.18	0.15	0.13	0.10	0.10	0.13	0.11		
02	0.38	0.28	0.23	0.36	0.24	0.43	0.43	0.26		
03	0.38	0.40	0.40	0.36	0.54	0.43	0.33	0.57		
04	0.95	0.34	0.75	0.66	0.80	0.62	0.59	0.41		
05	0.40	0.52	0.56	0.41	0.49	0.41	0.40	0.44		
06										
07										
08	0.15	0.10	0.07	0.07	0.11	0.10	0.09	0.15		
09	0.05	0.04	0.07	0.13	0.03	0.10	0.15	0.14	2.78	1.20
10	0.29	0.35	0.46	0.41	0.41	0.35	0.38	0.23	0.39	0.39
11	0.41	0.31	0.42	0.35	0.37	0.32	0.40	0.50	0.40	0.37
12	0.10	0.13	0.20	0.22	0.44	0.24	0.26	0.15		0.26
75										
01	0.30	0.21	0.21	0.18	0.21	0.19	0.27	0.32		0.29
02	0.20	0.29	0.49	0.23	0.14	0.14	0.19	0.35		0.16
03	0.24	0.33	0.33	0.28	0.19	0.12	0.28	0.15		0.32
04	0.18	0.26	0.23	0.31	0.17	0.26	0.29	0.20		0.33
05	0.21	0.18	0.25	0.22	0.18	0.33	0.29	0.19		0.26
06	0.17	0.19	0.22	0.13	0.15	0.09	0.18	0.07		0.26
07	0.12	0.12	0.11	0.09	0.13	0.06	0.09	0.11		0.11
08	0.36	0.34	0.27	0.29	0.14	0.14	0.19	0.20		0.50
09	0.07	-0.05	-0.05	-0.05	-0.05	-0.05	-0.05	0.05		0.06
10	0.44	0.62	0.54	0.71	0.56	0.51	0.70	0.10		0.40
11	0.13	0.10	0.09	0.04	0.01	0.01	0.06	0.09		0.07
12	0.32	0.32	0.42	0.37	0.37	0.40	0.47	0.45		0.36
76										
01	0.52	0.49	0.52	0.52	0.36	0.49	0.58	0.58		0.58
02	0.34	0.26	0.29	0.29	0.26	0.20	0.32	0.29		0.14

CAROLINA POWER & LIGHT COMPANY
SPECIAL SERVICES DEPARTMENT

ROBINSON WATER CHEMISTRY

AMMONIA-AS N (NEGATIVE SIGN SHOULD BE READ AS 'LESS THAN')

MONTH/STATION	AS	AB	ES	EB	GS	GB	HS	IS	JS	KS
3										
04	-0.05	-0.05	-0.05	-0.05	-0.05	-0.05	-0.05	-0.05		
05	-0.05	-0.05	-0.05	-0.05	-0.05	-0.05	-0.05	-0.05		
06	-0.05	-0.05	-0.05	-0.05	-0.05	-0.05	-0.05	-0.05		
07	-0.05	-0.05	-0.05	-0.05	-0.05	-0.05	-0.05	-0.05		
08	0.18	0.16	0.24	0.15	0.08	0.11	0.88	0.64		
09	-0.05	-0.05	-0.05	0.09	0.05	0.10	0.10	0.06		
10	0.04	0.03	0.02	0.06	0.02	0.01	0.02	0.01		
11	-0.01	0.03	0.04	0.03	0.03	-0.01	0.02	0.02		
12	0.06	0.08	0.07	0.07	0.03	0.04	0.08	0.03		
4										
01	0.02	0.07	0.03	0.05	0.03	0.05	-0.01	0.04		
02	0.03	0.02	0.04	0.06	0.05	0.02	0.06	0.04		
03	0.03	0.06	0.09	-0.01	-0.01	0.04	0.02	0.05		
04	0.02	0.02	0.02	0.03	0.02	0.02	0.04	0.03		
05	0.07	0.13	0.13	0.07	0.07	0.02	0.09	0.06		
06	0.08	0.05	0.09	0.05	0.03	0.02	0.04	0.02		
07										
08	-0.1	0.11	0.78	-01	-0.1	2.24	-0.1	-0.1		
09	0.15	-0.1	-0.1	-0.1	-0.1	-0.1	-0.1	-0.1	-0.1	-0.1
10		-0.1		-0.1	-0.1	-0.1	-0.1	-0.1	-0.1	-0.1
11	-0.02	-0.02	-0.02	-0.02	-0.02	-0.02	-0.02	-0.02	-0.02	-0.02
12	-0.02	-0.02	-0.02	-0.02	-0.02	-0.02	-0.02	-0.02		-0.02
5										
01	-0.02	-0.02	-0.02	-0.02	-0.02	-0.02	-0.02	-0.02		-0.02
02	-0.02	-0.02	-0.02	-0.02	-0.02	-0.02	-0.02	-0.02		-0.02
03	-0.02	-0.02	-0.02	-0.02	-0.02	-0.02	-0.02	-0.02		-0.02
04	-0.02	-0.02	0.02	-0.02	0.02	-0.02	-0.02	-0.02		-0.02
05	-0.02	0.02	-0.02	-0.02	-0.02	-0.02	-0.02	-0.02		-0.02
06	0.02	0.02	0.02	-0.02	0.03	0.04	0.07	-0.02		0.70
07	-0.02	0.09	0.03	-0.02	-0.02	-0.02	-0.02	0.06		-0.02
08	-0.02	0.11	-0.02	-0.02	0.03	-0.02	0.03	-0.02		-0.02
09	-0.02	0.03	-0.02	-0.02	-0.02	-0.02	-0.02	-0.02		-0.02
10	-0.02	-0.02	-0.02	-0.02	-0.02	-0.02	-0.02	-0.02		-0.02
11	-0.02	-0.02	-0.02	-0.02	-0.02	-0.02	-0.02	-0.02		-0.02
12	-0.02	0.03	0.03	0.03	-0.02	-0.02	0.03	-0.02		0.03
6										
01	-0.02	0.03	-0.02	0.02	-0.02	-0.02	0.02	-0.02		-0.02
02	-0.02	0.02	-0.02	-0.02	-0.02	-0.02	-0.02	-0.02		-0.02

CAROLINA POWER & LIGHT COMPANY
SPECIAL SERVICES DEPARTMENT

ROBINSON WATER CHEMISTRY

TOTAL PHOSPHATE-AS P (NEGATIVE SIGN SHOULD BE READ AS "LESS THAN")

MONTH/STATION	AS	AB	ES	EB	GS	GB	HS	IS	JS	KS
73										
04	0.19	0.22	0.90	0.23	0.30	0.20	0.31	0.25		
05	0.95	0.81	0.90	1.71	1.20	1.26	1.10	1.21		
06	0.04	0.04	0.08	0.07	0.04	0.03	0.03	0.10		
07	-0.01	-0.01	-0.01	0.01	-0.01	-0.01	-0.01	-0.01		
08	0.01	0.02	0.03	0.04	0.04	0.01	0.01	0.04		
09	0.01	0.02	0.02	0.02	0.02	0.03	0.02	0.02		
10	0.02	0.01	0.03	0.02	0.01	0.02	0.02	0.01		
11	0.01	0.02	0.01	0.01	0.03	0.01	0.01	0.01		
12	0.01	0.02	0.01	0.02	-0.01	-0.01	0.02	0.01		
74										
01	0.01	0.02	0.02	0.01	0.01	0.06	0.01	0.01		
02	0.01	0.01	0.01	0.01	0.01	0.01	0.01	0.01		
03	0.03	0.01	0.03	0.02	0.04	0.02	0.02	0.02		
04	0.02	0.01	0.01	0.02	0.02	0.05	0.01	0.03		
05	0.01	0.01	0.01	0.01	0.02	0.04	0.03	0.03		
06	0.02	0.02	0.02	0.01	0.02	0.02	0.02	0.02		
07										
08	-0.01	-0.01	-0.01	-0.01	0.03	-0.01	-0.01	-0.01		
09	0.01	0.01	0.02	0.59	0.04	0.54	0.06	0.54	0.02	0.23
10	0.02	0.02	0.02	0.02	0.01	0.02	0.01	0.01	0.01	0.01
11	0.01	0.01	0.01	0.01	0.01	0.01	0.01	0.01	0.03	0.02
12	0.01	0.01	0.01	0.01	-0.01	0.01	0.01	0.01		0.01
75										
01	0.04	0.03	0.02	0.02	0.03	0.02	0.01	0.02		0.01
02	0.01	0.01	0.01	0.01	0.13	0.01	0.02	0.18		0.01
03	-0.01	-0.01	-0.01	-0.01	-0.01	-0.01	0.01	0.01		-0.01
04	0.03	0.03	0.03	0.03	0.04	0.03	0.04	0.03		0.03
05	0.03	0.02	0.04	0.02	0.03	0.03	0.03	0.03		0.03
06	0.04	0.08	0.03	0.04	0.04	0.03	0.04	0.04		0.08
07	0.03	0.02	0.04	0.02	0.03	0.03	0.03	0.03		0.03
08	0.02	0.03	0.02	0.02	0.02	0.03	0.02	0.04		0.02
09	0.04	0.03	0.05	0.07	0.07	0.06	0.04	0.05		0.05
10	0.03	0.02	0.02	0.02	0.03	0.02	0.02	0.01		0.02
11	0.03	0.02	0.02	0.02	0.02	0.02	0.04	0.02		0.03
12	0.04	0.06	0.04	0.04	0.03	0.03	0.04	0.03		0.04
76										
01	0.04	0.02	0.02	0.02	-0.01	0.02	0.04	-0.01		0.02
02	-0.01	0.01	-0.01	-0.01	0.01	0.01	-0.01	-0.01		-0.01

CAROLINA POWER & LIGHT COMPANY
SPECIAL SERVICES DEPARTMENT

ROBINSON WATER CHEMISTRY

TOTAL DISSLOVED PHOSPHATE-AS P (NEGATIVE SIGN SHOULD BE READ AS 'LESS THAN')

MONTH/STATION	AS	AB	CS	EB	GS	GB	HS	IS	JS	KS
73										
04										
05										
06										
07										
08	0.01	0.01	0.01	0.01	0.01	0.01	0.01	0.03		
09	0.09	-0.01	-0.01	-0.01	-0.01	-0.01	-0.01	-0.01		
10	0.01	0.01	0.01	0.01	-0.01	-0.01	0.01	0.01		
11	0.01	0.01	-0.01	0.01	-0.01	-0.01	-0.01	-0.01		
12	-0.01	-0.01	0.01	0.01	-0.01	-0.01	-0.01	-0.01		
74										
01	0.01	0.01	-0.01	0.01	-0.01	0.01	0.01	-0.01		
02	0.01	-0.01	-0.01	-0.01	0.01	0.01	-0.01	0.01		
03	0.01	0.01	0.02	0.01	0.02	0.02	0.02	0.02		
04	0.01	0.01	0.01	0.01	0.02	0.01	0.01	0.03		
05	0.01	0.01	0.01	0.01	0.01	0.01	0.01	0.01		
06	0.01	0.01	0.01	0.01	-0.01	0.01	0.01	0.01		
07										
08										
09										
10	0.01	0.01	0.01	0.01	-0.01	-0.01	-0.01	0.01	0.01	0.01
11										
12										
75										
01										
02										
03										
04	0.02	0.02	0.01	0.01	0.02	0.01	0.02	0.03		0.03
05	0.02	0.01	0.02	0.01	0.01	0.01	0.01	0.01		0.02
06	0.02	0.02	0.02	0.02	0.03	0.02	0.02	0.03		0.04
07	0.02	0.02	0.02	0.02	0.02	0.02	0.02	0.02		0.02
08	0.02	0.02	0.01	0.02	0.02	0.02	0.02	0.02		0.02
09	0.05	0.04	0.03	0.05	0.06	0.04	0.05	0.04		0.03
10	0.01	0.01	0.02	0.01	0.01	0.01	0.01	0.01		0.01
11	-0.01	-0.01	-0.01	0.01	-0.01	-0.01	0.01	0.01		0.01
12	0.03	0.02	0.02	0.02	0.02	0.02	0.02	0.02		0.02
76										
01										
02	-0.01	-0.01	-0.01	-0.01	-0.01	-0.01	-0.01	-0.01		-0.01

CAROLINA POWER & LIGHT COMPANY
SPECIAL SERVICES DEPARTMENT

ROBINSON WATER CHEMISTRY

TOTAL ORTHOPHOSPHATE-AS P (NEGATIVE SIGN SHOULD BE READ AS "LESS THAN")

MONTH/STATION	AS	AB	ES	EB	GS	GB	HS	IS	JS	KS
73										
04	0.19	0.15	0.90	0.23	0.30	0.18	0.31	0.24		
05	0.52	0.52	0.67	0.45	0.51	0.56	0.55	0.49		
06	-0.01	-0.01	-0.01	-0.01	-0.01	-0.01	-0.01	0.01		
07	-0.01	-0.01	-0.01	-0.01	-0.01	-0.01	-0.01	-0.01		
08	-0.01	0.01	0.01	-0.01	-0.01	0.01	-0.01	0.01		
09	0.01	0.02	0.01	0.02	0.01	0.02	0.02	0.01		
10	0.01	0.01	0.01	0.02	0.01	0.01	0.01	-0.01		
11	0.01	0.01	0.01	0.01	0.01	0.01	0.01	-0.01		
12	-0.01	-0.01	-0.01	-0.01	-0.01	-0.01	-0.01	-0.01		
74										
01	0.01	0.01	-0.01	0.01	0.01	0.04	0.01	0.01		
02	0.01	0.01	0.01	-0.01	-0.01	-0.01	-0.01	-0.01		
03	-0.01	-0.01	-0.01	-0.01	-0.01	-0.01	-0.01	-0.01		
04	-0.01	-0.01	-0.01	-0.01	-0.01	-0.01	-0.01	-0.01		
05	-0.01	-0.01	-0.01	-0.01	0.01	0.01	-0.01	0.01		
06	-0.01	-0.01	-0.01	-0.01	0.01	0.01	-0.01	-0.01		
07										
08	-0.01	-0.01	-0.01	-0.01	-0.01	0.03	-0.01	-0.01		
09	0.01	0.01	0.02	0.04	0.03	0.04	0.04	0.04	0.02	0.03
10	0.01	0.01	0.01	0.01	0.01	0.01	0.01	-0.01	-0.01	0.01
11	0.01	0.01	0.01	0.01	-0.01	-0.01	0.01	-0.01	-0.01	0.01
12	-0.0	-0.01	-0.01	-0.01	-0.01	-0.01	-0.01	-0.01		-0.01
75										
01	0.01	0.01	0.01	0.01	0.01	0.01	0.01	0.01		0.01
02	0.01	0.01	0.01	0.01	0.10	0.01	0.02	0.15		0.01
03	-0.01	-0.01	-0.01	-0.01	-0.01	-0.01	-0.01	0.01		-0.01
04	-0.01	-0.01	-0.01	-0.01	-0.01	-0.01	-0.01	-0.01		-0.01
05	0.02	-0.01	-0.01	-0.01	-0.01	-0.01	-0.01	-0.01		-0.01
06	-0.01	-0.01	-0.01	-0.01	-0.01	-0.01	-0.01	0.01		0.01
07	0.02	-0.01	0.01	-0.01	-0.01	-0.01	-0.01	0.01		0.02
08	0.01	-0.01	-0.01	0.01	-0.01	0.01	-0.01	0.01		-0.01
09	0.01	0.02	0.01	0.02	0.01	0.01	0.01	-0.01		-0.01
10	0.01	-0.01	-0.01	-0.01	-0.01	-0.01	0.01	-0.01		-0.01
11	-0.01	0.01	0.01	-0.01	-0.01	-0.01	0.01	-0.01		-0.01
12	-0.01	0.01	-0.01	-0.01	-0.01	-0.01	0.01	-0.01		-0.01
76										
01	-0.01	-0.01	-0.01	-0.01	-0.01	-0.01	-0.01	-0.01		-0.01
02										

CAROLINA POWER & LIGHT COMPANY
SPECIAL SERVICES DEPARTMENT

ROBINSON WATER CHEMISTRY

TOTAL DISSLOVED ORTHOPHOSPHATE-AS P (NEGATIVE SIGN SHOULD BE READ AS'LESS THAN')

MONTH/STATION	AS	AB	ES	EB	GS	GB	HS	IS	JS	KS
3										
04										
05										
06										
07										
08	-0.01	-0.01	-0.01	-0.01	-0.01	-0.01	-0.01	-0.01		
09	.02	-0.01	-0.01	-0.01	-0.01	-0.01	-0.01	-0.01		
10	-0.01	-0.01	-0.01	-0.01	-0.01	-0.01	-0.01	-0.01		
11	0.01	0.01	-0.01	0.01	-0.01	-0.01	-0.01	-0.01		
12	-0.01	-0.01	-0.01	-0.01	-0.01	-0.01	-0.01	-0.01		
4										
01	0.01	-0.01	-0.01	-0.01	-0.01	-0.01	-0.01	-0.01		
02	0.01	-0.01	-0.01	-0.01	-0.01	-0.01	-0.01	-0.01		
03	-0.01	-0.01	-0.01	-0.01	-0.01	-0.01	-0.01	-0.01		
04	-0.01	-0.01	-0.01	-0.01	-0.01	-0.01	-0.01	-0.01		
05	0.01	0.01	-0.01	0.01	0.01	-0.01	0.01	0.01		
06	-0.01	-0.01	-0.01	-0.01	-0.01	-0.01	-0.01	-0.01		
07										
08										
09										
10	-0.01	-0.01	-0.01	-0.01	-0.01	-0.01	-0.01	-0.01	-0.01	0.01
11										
12										
75										
01										
02										
03										
04	-0.01	-0.01	-0.01	-0.01	-0.01	-0.01	-0.01	-0.01		-0.01
05	-0.01	-0.01	-0.01	0.01	-0.01	-0.01	-0.01	-0.01		-0.01
06	0.01	-0.01	-0.01	-0.01	-0.01	-0.01	-0.01	-0.01		-0.01
07	-0.01	-0.01	-0.01	-0.01	-0.01	-0.01	-0.01	-0.01		-0.01
08	0.01	-0.01	-0.01	-0.01	-0.01	-0.01	-0.01	-0.01		-0.01
09	0.01	0.02	0.01	0.01	0.02	0.01	0.02	-0.01		-0.01
10	0.01	-0.01	-0.01	-0.01	-0.01	-0.01	-0.01	-0.01		-0.01
11	-0.01	-0.01	-0.01	-0.01	-0.01	-0.01	-0.01	-0.01		-0.01
12	-0.01	-0.01	-0.01	-0.01	-0.01	-0.01	-0.01	-0.01		-0.01
76										
01										
02										

CAROLINA POWER & LIGHT COMPANY
SPECIAL SERVICES DEPARTMENT

ROBINSON WATER CHEMISTRY

TOTAL ALKALINITY-AS CACO3 (NEGATIVE SIGN SHOULD BE READ AS 'LESS THAN')

MONTH/STATION	AS	AB	ES	EB	GS	GB	HS	IS	JS	KS
73										
04										
05	6.0	8.0	6.0	6.0	4.0	8.0	4.0	6.0		
06	4.0	4.0	3.0	3.0	3.0	3.0	3.0	3.0		
07	2.0	2.0	3.0	2.0	2.0	2.0	2.0	2.0		
08	0.0	3.6	3.6	3.6	1.8	9.0	1.8	0.9		
09	1.0	10.0	10.0	10.0	1.0	2.0	2.0	2.0		
10	4.0	3.0	3.0	13.0	5.0	1.0	10.0	10.0		
11	1.0	1.5	1.5	2.0	1.5	1.0	10.0	10.0		
12	1.0	2.0	3.0	1.0	-1.0	-1.0	1.0	-1.0		
74										
01	1	-1	1	1	1	-1	-1	-1		
02	-1	-1	1	-1	-1	-1	-1	-1		
03	-1	-1	2	1	1	-1	-1	1		
04	1	2	-1	-1	-1	-1	-1	-1		
05	2	1	2	1	-1	-1	-1	-1		
06										
07										
08	2	2	2	4	1	1	2	-1		
09	2	2	2	2	3	2	2	2	2	3
10	-1	-1	-1	-1	-1	-1	1	-1	1	-1
11	-1	-1	-1	-1	-1	-1	-1	-1	1	1
12	1	1	1	1	-1	-1	1	-1		1
75										
01	1	1	1	1	1	1	1	2		1
02	-1	-1	1	1	-1	-1	1	1		-1
03	-1	-1	-1	-1	-1	-1	-1	-1		-1
04	-1	-1	-1	-1	-1	-1	-1	-1		-1
05	-1	-1	-1	-1	2	-1	-1	1		-1
06	1.2	0.7	0.5	1.2	1.2	0.8	1.0	1.0		4.6
07	0.4	1.3	0.7	0.9	0.9	0.4	1.0	8.4		0.5
08	2.0	1.8	1.3	1.1	0.3	0.7	0.8	0.8		1.3
09	0.5	0.6	0.3	0.5	0.5	0.4	0.6	0.2		-0.1
10	0.3	0.1	0.7	0.3	1.6	0.9	0.4	0.8		0.1
11	0.1	0.1	1.1	5.3	0.3	0.4	1.0	0.8		0.9
12	1.5	0.7	0.1	0.2	0.1	0.5	-0.1	0.1		-0.1
76										
01	-0.5	-0.5	0.7	0.7	-0.5	-0.5	-0.5	-0.5		0.7
02	-1.	-1.	-1.	-1.	-1.	-1.	-1.	-1.		-1.

CAROLINA POWER & LIGHT COMPANY
SPECIAL SERVICES DEPARTMENT

ROBINSON WATER CHEMISTRY

HARDNESS-AS CACO3 (NEGATIVE SIGN SHOULD BE READ AS 'LESS THAN')

MONTH/STATION	AS	AB	ES	EB	GS	GB	HS	IS	JS	KS
73										
04										
05										
06										
07										
08										
09										
10										
11										
12										
74										
01	4.	7.	8.	6.	8	7	6.	7.		
02	4.	4.	4.	4.	5	6	6.	6.		
03	7.0	6.	6.	6.	6	6	7.	6.		
04	5.0	9.0	7.0	7.0	5.0	5.0	5.0	9.0		
05	6.0	6.0	4.0	5.2	3.2	5.2	6.0	6.0		
06										
07										
08	5.	5.	4.	5.	5	3	4.	4.		
09	3.	5.	5.	3.	3	3	5.	5.	4.	4.
10	11.	11.	11.	7.	9	5	7.	9.	5	7
11	-1.	-1.	-1.	-1.	-1	-1	1.	-1	-1	-1
12	23	22	16	20	22	29	37	41		52
75										
01	6.	4.	4.	5.	4.	4.	5.	6.		6.
02	4.	2.	2.	3.	3.	2.	2.	2.		2.
03	6.	6.	6.	6.	5.	5.	6.	6.		6.
04	4.	3.	2.	3.	2.	2.	7.	5.		5.
05	3.	4.	5.	6.	4.	6.	4.	5.		4.
06	2.	5.	4.	3.	2.	2.	5.	3.		7.
07	5.9	3.9	3.2	1.9	1.9	1.6	2.8	1.9		2.4
08	4.	4.	4.	4.	4.	4.	4.	4.		5.
09	8.	5.	6.	4.	4.	4.	6.	3.		6.
10	6.	6.	4.	4.	4.	5.	6.	6.		5.
11	6.	6.	6.	6.	6.	4.	6.	5.		5.
12	4.	4.	4.	4.	4.	4.	4.	4.		5.
76										
01	6.	4.	6.	6.	4.	6.	4.	4.		4.
02	6.	6.	6.	6.	6.	6.	6.	6.		6.

CAROLINA POWER & LIGHT COMPANY
SPECIAL SERVICES DEPARTMENT

ROBINSON WATER CHEMISTRY

TOTAL CALCIUM

MONTH/STATION	AS	AB	ES	EB	GS	GB	HS	IS	JS	KS
73										
04	1.38	1.36	1.51	1.26	1.12	1.28	1.48	1.41		
05	1.43	1.10	1.23	1.17		0.86	1.23			
06	1.19	1.14	1.34	1.22	1.10	1.01	1.49			
07	1.06	0.64	1.03	1.09	1.13	1.03	1.11	1.15		
08	1.06	1.15	1.00	0.96	0.93	0.94	0.94	0.62		
09	0.76	1.21	0.97	0.95	0.49	0.49	1.02	0.72		
10	1.03	0.98	0.98	1.00	0.40	0.41	0.81	0.40		
11	1.19	1.10	1.01	1.03	0.93	0.84	1.09	0.86		
12	0.75	0.69	0.66	0.68	0.59	0.73	0.83	0.84		
74										
01	0.75	0.37	0.73	0.71	0.57	0.36	0.73	0.61		
02	0.49	0.30	0.58	0.47	0.51	0.47	0.46	0.45		
03	0.92	0.94	0.96	1.03	0.82	0.78	1.01	0.85		
04	1.15	1.16	1.45	1.34	0.59	0.66	0.92	0.83		
05	0.90	0.83	0.84	0.75	0.60	0.55	0.83	0.47		
06										
07										
08	0.53	0.43	0.52	0.46	0.46	0.42	0.42	0.39		
09	1.1	1.4	0.95	0.95	0.68	0.56	0.95	0.90	0.90	1.1
10	1.75	1.39	2.73	1.65	1.53	1.23	1.54	1.11	1.06	1.67
11	1.40	1.73	0.98	1.30	0.70	0.92	1.30	0.92	1.03	1.20
12	0.89	1.03	0.97	1.01	0.51	0.92	0.98	0.85		0.93
75										
01	1.89	1.08	1.11	1.66	1.32	4.40	2.27	2.11		1.61
02	1.6	1.6	1.6	1.5	1.7	1.8	1.6	1.5		1.6
03	1.10	1.10	1.10	1.20	0.90	0.90	1.20	0.90		1.10
04	1.34	1.39	1.31	1.33	1.31	1.00	1.56	1.23		1.63
05	1.10	1.04	1.22	1.21	0.92	0.85	1.13	0.93		1.08
06										
07	1.24	1.27	1.26	1.22	1.14	0.75	1.30	0.98		1.25
08			4.9							
09										
10										
11										
12										
76										
01										
02										

CAROLINA POWER & LIGHT COMPANY
SPECIAL SERVICES DEPARTMENT

ROBINSON WATER CHEMISTRY

TOTAL MAGNESIUM

MONTH/STATION	AS	AB	ES	EB	GS	GB	HS	IS	JS	KS
73										
04	0.43	0.44	0.45	0.43	0.35	0.38	0.46	0.41		
05	0.43	0.51	0.40	0.41		0.30	0.43			
06	0.40	0.45	0.41	0.41	0.41	0.38	0.44			
07	0.45	0.47	0.44	0.47	0.44	0.42	0.49	0.60		
08	0.49	0.53	0.54	1.55	0.39	0.55	0.48	0.43		
09	0.43	0.81	0.49	0.57	0.33	0.37	0.49	0.37		
10	0.58	0.60	0.56	0.63	0.46	0.45	0.65	0.39		
11	0.46	0.41	0.43	0.44	0.37	0.39	0.46	0.39		
12	0.39	0.40	0.40	0.40	0.56	0.57	0.43	0.63		
74										
01	0.36	0.39	0.40	0.39	0.36	0.37	0.41	0.37		
02	0.39	0.43	0.42	0.43	0.47	0.54	0.44	0.57		
03	0.48	0.47	0.48	0.37	0.41	0.41	0.50	0.49		
04	0.42	0.69	0.68	0.42	0.35	0.35	0.46	0.39		
05	0.45	0.47	0.49	0.46	0.36	0.28	0.47	0.39		
06										
07										
08	0.44	0.41	0.41	0.43	0.46	0.40	0.45	0.44		
09	0.44	0.44	0.48	0.42	0.38	0.37	0.46	0.46	0.41	0.57
10	0.45	0.41	0.44	0.49	0.43	0.37	0.47	0.36	0.33	0.50
11	0.64	0.57	0.42	0.56	0.32	0.49	0.55	0.47	0.59	0.65
12	0.47	0.46	0.50	0.45	0.29	0.65	0.47	0.62		0.47
75										
01	0.58	0.54	0.53	0.54	0.51	0.68	0.58	0.54		0.49
02	0.50	0.52	0.51	0.52	0.51	0.52	0.54	0.53		0.55
03	0.43	0.45	0.47	0.46	0.41	0.42	0.48	0.77		0.44
04	0.47	0.48	0.46	0.46	0.43	0.36	0.54	0.47		0.56
05	0.46	0.45	0.48	[illegible]	0.42	0.36	0.48	0.44		0.48
06	0.47	0.47	0.49	0.47	0.36	0.31	0.50	0.37		0.56
07	0.49	0.48	0.49	0.48	0.45	0.31	0.53	0.40		0.50
08	0.52	0.49	0.54	0.52	0.48	0.45	0.52	0.52		0.54
09	0.48	0.48	0.46	0.47	0.43	0.45	0.48	0.38		0.50
10	0.54	0.54	0.54	0.56	0.56	0.54	0.56	0.54		0.57
11	0.43	0.44	0.43	0.45	0.50	0.48	0.49	0.51		0.51
12	0.42	0.45	0.40	0.43	0.34	0.38	0.46	0.38		0.46
76										
01	0.51	0.45	0.49	0.57	0.53	0.54	0.52	0.54		0.62
02	0.54	0.52	0.54	0.54	0.52	0.52	0.55	0.54		0.56

CAROLINA POWER & LIGHT COMPANY
SPECIAL SERVICES DEPARTMENT

ROBINSON WATER CHEMISTRY

TOTAL SODIUM

MONTH/STATION	AS	AB	ES	EB	GS	GB	HS	IS	JS	KS
73										
04	2.51	2.55	2.43	2.52	2.33	2.34	2.39	2.57		
05	2.26	2.63	2.25	2.07		1.92	2.25			
06	2.47	2.17	2.27	3.21	2.78	2.48	3.23			
07	1.87	1.97	1.95	1.93	2.12	2.15	2.07	2.70		
08	1.90	1.91	1.85	1.99	1.76	1.74	1.99	1.79		
09	1.88	2.84	2.02	2.06	1.54	1.71	2.17	1.87		
10	2.07	2.13	2.01	2.36	1.70	1.82	2.11	1.64		
11	1.96	1.88	1.87	1.94	1.80	1.89	1.75	1.56		
12	1.59	1.70	1.62	1.65	1.60	1.82	1.95	2.03		
74										
01	1.69	1.78	1.82	1.76	1.85	1.89	1.83	1.92		
02	1.71	1.81	1.78	1.76	1.78	1.83	1.75	1.92		
03	2.34	2.23	2.07	2.14	2.05	1.96	2.02	2.25		
04	1.93	2.54	2.32	2.04	1.83	1.71	1.83	1.90		
05	1.29	1.92	1.88	1.71	1.51	1.51	1.78	1.68		
06										
07										
08	1.6	1.6	1.8	1.6	1.5	1.4	1.6	1.3		
09	1.0	1.7	2.1	1.5	1.4	1.3	1.6	1.3	1.3	2.4
10	2.6	2.4	2.0	2.8	2.8	2.4	2.7	2.4	2.3	2.7
11	3.00	3.68	2.65	2.40	1.77	3.03	2.98	2.11	2.96	3.25
12	2.1	2.5	2.6	2.0	1.7	2.1	2.1	2.1		2.1
75										
01	2.6	2.5	2.8	2.9	2.7	2.7	2.8	2.6		3.6
02	2.8	2.9	2.8	2.7	2.9	2.2	2.6	2.6		2.7
03	1.90	2.00	2.20	2.20	2.00	1.90	2.10	1.80		2.00
04	2.10	1.90	2.00	2.20	2.10	1.80	2.20	2.00		2.10
05	1.66	1.62	1.62	1.64	1.51	1.64	1.67	1.73		1.72
06	1.62	1.64	1.68	[illegible]	1.49	1.36	4.44	1.59		33.
07	1.59	1.56	1.97	1.59	1.49	1.19	1.58	2.75		1.55
08	1.72	1.52	1.03	1.64	1.92	1.57	1.71	2.09		1.72
09	1.60	1.59	1.66	1.47	1.60	1.41	1.77	1.19		1.55
10	1.51	1.44	1.61	1.65	1.52	1.34	1.52	1.43		1.54
11	1.64	1.71	1.83	1.75	1.53	1.45	1.70	1.60		1.94
12	1.65	1.67	1.66	1.64	1.43	1.48	1.70	1.43		1.73
76										
01	1.71	1.64	1.80	1.69	1.72	1.59	1.71	1.62		1.62
02	1.54	1.47	1.48	1.46	1.43	1.39	1.53	1.42		1.57

CAROLINA POWER & LIGHT COMPANY
SPECIAL SERVICES DEPARTMENT

ROBINSON WATER CHEMISTRY

TOTAL IRON

MONTH/STATION	AS	AB	ES	EB	GS	GB	HS	IS	JS	KS
73										
04	0.30	0.25	0.34	0.41	0.33	0.41	0.47	0.42		
05	0.51	0.86	0.47	0.46		0.33	0.52			
06	0.56	0.91	0.74	0.71	0.74	0.90	0.65			
07	1.55	3.19	1.83	1.78	1.48	1.33	1.51	1.31		
08	1.49	1.71	1.56	1.73	1.84	0.72	1.11	0.42		
09	1.04	1.52	1.09	1.05	0.56	1.14	1.25	0.59		
10	0.92	1.01	1.00	1.72	0.39	0.45	1.17	0.45		
11	0.81	0.68	0.65	0.66	0.61	0.40	0.69	0.44		
12	0.62	0.67	0.73	0.68	0.25	0.20	0.57	0.20		
74										
01	0.35	1.21	0.47	0.44	0.35	0.63	0.48	0.31		
02	0.46	0.94	0.58	0.52	0.32	0.42	0.50	0.41		
03	0.54	0.62	0.68	0.65	0.61	0.68	0.63	0.66		
04	0.36	0.34	0.38	0.56	0.36	0.38	0.33	0.38		
05	0.62	1.01	0.81	0.69	0.76	0.93	0.64	0.79		
06										
07										
08	2.28	0.92	0.87	1.11	0.84	3.85	1.05	1.08		
09	1.2	1.1	1.1	2.3	1.2	1.1	1.4	1.3	1.0	1.4
10	0.97	1.28	0.90	1.10	0.77	0.63	1.04	0.55	1.06	1.06
11	1.15	1.01	0.78	1.13	0.48	0.68	0.97	0.86	0.66	1.02
12	0.59	0.67	0.70	0.68	0.18	0.38	0.70	0.34		0.67
75										
01	0.39	0.79	0.44	0.41	0.36	0.66	0.47	0.36		0.41
02	0.55	0.53	0.46	0.44	0.39	0.70	0.53	0.37		0.49
03	0.23	0.30	0.26	0.26	0.17	0.18	0.34	0.18		0.32
04	0.54	0.59	0.58	0.61	1.13	0.62	1.16	0.90		1.23
05	0.75	1.15	0.98	0.61	1.02	0.72	0.67	0.88		0.76
06	1.00	1.10	1.05	1.07	0.95	0.60	1.08	0.77		1.11
07	1.03	1.34	1.09	1.03	0.92	0.53	1.16	0.76		1.06
08	1.11	2.27	1.31	1.37	1.16	1.24	1.26	1.21		1.26
09	1.17	1.32	1.28	1.26	1.12	1.04	1.27	0.72		1.33
10	0.92	1.25	1.27	1.13	0.96	0.60	1.17	0.66		1.11
11	0.95	1.05	1.02	0.99	0.86	0.78	1.24	0.85		1.13
12	0.77	0.86	0.69	0.73	0.32	0.36	0.88	0.37		0.83
76										
01	0.58	0.67	0.53	0.57	0.29	0.25	0.65	0.33		0.60
02	0.31	0.31	0.33	0.30	0.25	0.30	0.34	0.39		0.39

CAROLINA POWER & LIGHT COMPANY
SPECIAL SERVICES DEPARTMENT

ROBINSON WATER CHEMISTRY

DISSLOVED SILICA-AS SIO4 (NEGATIVE SIGN SHOULD BE READ AS 'LESS THAN')

MONTH/STATION	AS	AB	ES	EB	GS	GC	HS	IS	JS	KS
73										
04	1.0	2.0	2.0	1.0	1.0	0.0	1.0	2.0		
05	3.0		3.0	3.0	5.0	5.0	3.0	6.0		
06	1.0	1.0	1.0	1.0	2.0	2.0	1.0	3.0		
07	3.0	4.0	3.0	3.0	3.0	4.0	3.0	6.0		
08	0.9	0.9	0.9	0.9	0.4	3.2	0.4	0.9		
09	0.2	-0.1	0.2	4.7	7.3	0.8	7.7	0.6		
10	3.9	3.8	3.5	0.1	3.7	4.0	4.4	7.7		
11	3.5	3.9	4.2	6.	4.1	4.0	4.2	4.2		
12	5.8	5.3	5.8	5.9	5.9	7.0	6.6	6.9		
74										
01	6.0	5.1	5.7	5.3	3.6	3.4	5.4	4.6		
02	8.2	6.4	6.4	6.3	4.3	5.1	6.2	6.2		
03	4.0	5.0	4.4	4.4	2.1	2.1	4.0	3.0		
04	2.0	2.0	2.1	2.1	2.0	2.0	2.0	3.5		
05	3.0	3.0	2.0	2.0	3.0	3.0	3.0	3.0		
06	4.0	4.0	4.0	4.0	4.0	4.0	4.0	5.0		
07										
08	4.	3.	3.	3.	5.	5.	4.	4.		
09	4.	3.	5.	4.	5.	5.	5.	6.	6.	5.
10	5.4	5.4	4.4	5.7	5.2	5.2	5.4	5.7	5.7	5.4
11	0.8	0.9	0.1	-0.1	0.8	1.8	0.8	0.3	0.5	1.1
12	0.13	0.14	0.06	0.08	0.34	0.06	0.34	0.77		0.13
75										
01	1.5	1.3	0.5	1.2	0.5	0.9	0.3	0.4		0.4
02	1.2	0.8	0.7	1.0	0.2	0.3	1.1	0.5		1.0
03	3.3	4.0	4.0	3.1	0.8	1.1	3.4	0.9		3.4
04	2.4	2.4	2.0	2.1	0.9	2.0	2.2	1.2		1.9
05	1.8	3.0	1.5	1.5	3.3	4.1	1.2	3.7		1.2
06	2.2	2.0	2.2	2.3	3.3	4.1	2.0	4.2		2.2
07	2.7	2.1	2.4	2.4	2.6	3.0	3.2	4.0		3.0
08	3.1	5.2	5.0	5.6	6.1	5.0	6.4	5.2		5.2
09	4.1	4.9	5.2	5.2	5.1	4.5	4.9	5.2		5.2
10	6.0	5.3	5.0	5.4	5.5	5.8	6.3	5.8		5.0
11	5.6	5.4	5.7	5.4	5.4	5.7	5.7	5.9		6.1
12	5.1	5.6	5.3	5.6	5.0	4.9	5.2	5.2		5.5
76										
01	2.4	2.0	2.2	2.3	2.6	2.6	3.0	2.9		3.1
02	3.5	3.1	3.1	3.1	-1.0	-1.0	3.1	1.6		3.6

CAROLINA POWER & LIGHT COMPANY
SPECIAL SERVICES DEPARTMENT

ROBINSON WATER CHEMISTRY

CHLORIDE-AS CL-

MONTH/STATION	AS	AB	ES	EB	GS	GB	HS	IS	JS	KS
73										
04										
05										
06	4.0	3.0	4.0	4.0	5.0	3.0	4.0	4.0		
07	3.0	4.0	4.0	4.0	4.0	2.0	3.0	4.0		
08	3.8	3.8	4.3	3.8	4.3	3.3	5.8	5.1		
09	2.5	3.0	3.3	3.5	3.4	2.8	3.0	3.2		
10	2.3	2.0	2.0	1.8	1.5	1.3	1.5	1.3		
11	1.5	1.5	1.5	2.0	1.8	2.5	1.8	1.8		
12	2.3	1.6	2.1	2.6	2.6	2.1	1.8	2.6		
74										
01	2.3	2.3	1.5	1.5	2.0	2.3	2.0	2.0		
02	1.8	1.8	1.5	2.0	1.8	2.3	1.9	2.9		
03	2.3	2.1	2.6	2.2	2.3	2.0	2.0	2.2		
04	2.7	2.3	2.2	2.3	1.9	2.0	2.2	2.7		
05	2.0	2.6	2.3	2.3	1.5	1.7	2.2	2.1		
06										
07										
08	4.	4.	4.	4.	3.	4.	4.	4.		
09	7.	7.	7.	8.	6.	7.	8.	8.	7.	7.
10	2.6	3.1	2.9	2.9	2.6	2.2	2.5	2.2	2.1	2.6
11	2.8	2.0	2.4	2.9	2.0	1.9	1.4	2.5	2.1	2.3
12	2.7	2.3	2.5	2.6	2.0	3.2	2.3	3.3		2.4
75										
01	2.8	2.7	2.9	2.8	3.0	2.4	2.7	2.5		2.7
02	5.6	2.9	3.0	2.9	2.3	2.8	3.0	2.9		2.6
03	2.3	2.3	2.3	2.3	2.3	1.9	2.3	2.6		2.6
04	2.8	2.0	2.0	1.6	2.5	1.9	2.5	2.4		2.1
05	2.4	2.2	1.7	2.0	4.5	1.4	2.4	2.2		1.9
06	2.4	2.5	2.6	2.1	2.3	2.0	7.2	2.4		5.2
07	2.5	2.3	2.4	2.1	2.1	1.9	2.1	2.2		2.1
08	1.7	2.0	1.8	2.0	2.2	2.0	1.8	3.0		2.4
09	3.3	2.0	2.1	2.0	2.3	2.1	2.1	1.8		2.2
10	1.8	1.9	2.3	1.8	2.2	2.0	2.3	2.4		2.1
11	0.9	1.9	1.7	1.7	2.5	2.4	1.7	2.4		2.0
12	2.2	2.2	2.0	2.4	2.0	1.4	2.4	2.4		2.4
76										
01	1.8	1.6	2.0	1.6	2.0	2.0	1.8	1.8		2.0
02	2.2	2.1	2.0	1.8	2.1	2.0	2.1	2.2		2.2

CAROLINA POWER & LIGHT COMPANY
SPECIAL SERVICES DEPARTMENT

ROBINSON WATER CHEMISTRY

SULFATE-AS SO4= (NEGATIVE SIGN SHOULD BE READ AS 'LESS THAN')

MONTH/STATION	AS	AB	ES	EB	GS	GB	HS	IS	JS	KS
73										
04	2.0	3.0	0.0	1.0	3.0	5.0	3.0	3.0		
05	1.0		3.0	1.0	3.0	3.0	2.0	2.0		
06	2.0	2.0	7.0	5.0	3.0	2.0	2.0	1.0		
07	12.0	11.0	11.0	7.0	12.0	12.0	12.0	11.0		
08	2.6	2.6	2.3	2.6	1.0	1.0	3.2	1.0		
09	3.7	2.4	2.5	2.5	1.0	-0.1	3.5	-0.1		
10	2.6	2.4	2.2	2.5	0.3	0.3	3.2	0.3		
11	3.5	2.7	2.4	2.2	2.1	-1.0	4.6	-1.0		
12	1.4	1.3	5.6	1.9	3.4	3.0	2.5	3.5		
74										
01	5.1	5.4	6.9	5.4	3.2	3.2	6.6	8.2		
02	5.0	5.0	3.0	6.0	5.0	5.0	4.0	5.0		
03	3.0	3.2	3.5	3.7	2.2	1.7	3.3	2.2		
04	3.0	3.0	3.0	3.0	2.0	2.0	4.0	1.9		
05	3.0	4.0	4.0	4.0	2.0	2.0	4.0	3.0		
06	2.0	3.0	2.0	2.0	1.0	1.0	4.0	2.0		
07										
08	4.	5.	5.	5.	5.	3.	6.	4.		
09	2.	2.	2.	2.	6.	7.	8.	8.	7.	7.
10	1.0	1.0	1.0	1.0	1.0	1.0	2.0	1.0	1.0	3.0
11	2.0	1.0	3.0	1.0	1.0	1.0	2.0	1.0	1.0	2.0
12	3.0	6.0	6.0	2.0	4.0	4.0	3.0	4.0		3.0
75										
01	2.0	1.6	2.0	1.1	1.6	1.8	2.0	1.6		2.7
02	1.1	1.1	1.4	1.1	1.6	1.9	1.6	1.8		1.9
03	2.5	2.0	2.0	2.3	1.6	1.4	2.5	1.6		2.0
04	2.5	2.7	2.2	2.5	2.0	-1.0	3.6	1.8		3.3
05	3.3	2.2	2.9	2.9	2.1	1.1	0.6	4.5		4.4
06	3.4	2.5	3.3	2.2	1.0	1.0	3.3	-1.0		4.8
07	3.8	2.7	3.6	3.0	3.4	1.6	3.9	1.6		3.8
08	5.3	3.3	5.4	4.0	3.4	5.2	4.8	2.9		4.5
09	2.5	3.8	4.0	2.9	2.0	1.6	2.9	-1.0		4.1
10	4.0	2.0	3.0	3.0	2.0	3.0	5.0	4.0		4.0
11	2.5	2.5	2.0	2.5	-1.0	-1.0	2.0	-1.0		2.0
12	0.8	0.8	1.2	1.0	1.0	0.6	1.1	0.7		1.2
76										
01	1.0	1.2	1.3	1.7	3.9	1.0	1.3	1.0		1.3
02	1.0	1.0	1.0	1.0	-1.0	-1.0	1.1	-1.0		1.0

CAROLINA POWER & LIGHT COMPANY
SPECIAL SERVICES DEPARTMENT

ROBINSON WATER CHEMISTRY

COD (NEGATIVE SIGN SHOULD BE READ AS 'LESS THAN')

MONTH/STATION	AS	AB	ES	EB	GS	GB	HS	IS	JS	KS
73										
04	13	8	7	8	9	8	12	9		
05	7	18	15	11	4	7	7	7		
06	4	12	12	8	16	28	16	20		
07	24	24	28	28	24	24	28	28		
08	12	8	20	40	4	28	4	4		
09	36	36	43	44	32	44	44	29		
10	42	39	37	8	39	12	8	4		
11	19	15	8	23	15	23	19	19		
12	26	22	29	15	29	29	7	7		
74										
01	63	52	55	55	52	33	88	52		
02	22	37	22	52	15	15	11	22		
03	27	23	31	27	27	47	12	16		
04	27	19	81	97	97	89	34	89		
05	24	24	20	29	24	33	33	20		
06	16	24	24	29	24	16	61	20		
07										
08	31	20	31	66	51	57	31	57		
09	38	34	31	38	23	15	38	31	15	23
10	26	11	11	15	19	14	11	4	4	11
11	7	26	18	18	11	7	18	4	4	22
12	22	22	22	18	18	47	29	25		18
75										
01	23	19	15	15	19	19	12	12		8
02	35	38	35	35	38	42	19	23		38
03	15	15	26	19	15	19	23	8		4
04	43	43	39	39	51	47	35	39		27
05	35	8	31	4	12	12	20	31		12
06	39	12	12	12	16	16	16	20		35
07	19	11	15	11	11	11	7	15		7
08	35	43	27	27	27	27	23	27		23
09	15	20	12	16	20	12	39	39		39
10	12	39	31	62	27	23	16	27		23
11	25	17	21	21	17	17	17	-1		17
12	120	31	27	23	19	4	23	-1		19
76										
01	4	8	8	12	8	12	12	8		8
02	30	40	40	32	30	11	11	11		11

CAROLINA POWER & LIGHT COMPANY
SPECIAL SERVICES DEPARTMENT

ROBINSON WATER CHEMISTRY

TURBIDITY (NTU)

MONTH/STATION	AS	AB	ES	EB	GS	GB	HS	IS	JS	KS
73										
04										
05										
06										
07										
08										
09										
10										
11										
12										
74										
01										
02										
03										
04										
05										
06										
07										
08										
09										
10										
11										
12	3.0	3.0	3.5	3.0	1.3	2.6	3.1	1.6		2.8
75										
01	1.5	9.5	2.0	2.0	2.3	3.3	2.5	2.2		1.5
02	4.3	3.7	4.0	3.5	2.5	1.8	3.4	1.8		3.5
03	2.8	4.0	3.7	3.0	1.8	2.5	3.5	1.8		3.1
04	2.6	3.0	2.4	3.2	5.5	3.2	4.8	2.5		6.0
05	2.0	3.7	3.4	3.8	4.2	4.1	3.0	4.2		2.5
06	2.6	4.9	3.8	3.3	5.9	3.8	3.8	6.4		5.0
07	3.0	3.5	5.8	[illegible]	3.5	4.8	4.3	3.6		3.5
08	3.3	6.0	5.5	5.5	4.3	4.7	4.8	5.1		4.1
09	2.7	4.5	3.5	3.5	3.8	3.3	3.5	4.0		3.9
10	2.6	5.5	3.5	4.3	3.5	3.7	4.0	3.0		3.5
11	2.8	4.9	[illegible]	3.4	3.3	3.3	5.5	2.4		3.7
12	3.4	5.9	3.0	3.0	2.5	2.7	4.0	2.5		3.2
76										
01	3.3	3.6	3.5	3.5	2.5	2.5	3.5	2.0		3.3
02	2.0	2.4	2.5	2.5	3.1	3.8	2.5	2.1		2.0

CAROLINA POWER & LIGHT COMPANY
SPECIAL SERVICES DEPARTMENT

ROBINSON WATER CHEMISTRY

TOTAL SOLIDS

MONTH/STATION	AS	AB	ES	EB	GS	GB	HS	IS	JS	KS
3										
04	48	31	22	41	29	37	18	37		
05	66	116	164	81	76	81	216	96		
06	10	26	26	34	49	72	60	82		
07	33	29	24	35	34	170	40	55		
08	37	37	46	35	34	47	34	42		
09	113	114	130	118	71	85	134	130		
10	151	184	150	164	166	178	176	170		
11	48	40	34	35	74	67	59	55		
12	121	119	111	136	113	97	87	94		
4										
01	199	211	193	190	189	231	137	160		
02	52	35	44	55	53	63	36	28		
03	184	126	124	155	159	138	102	128		
04	201	126	106	123	134	166	133	150		
05	201	192	199	207	222	271	203	206		
06	158	155	172	151	143	177	138	136		
07										
08	60	47	55	45	43	103	116	66		
09	51	60	66	90	60	58	48	53	58	39
10	170	157	163	228	171	204	181	179	188	178
11	106	108	132	125	117	139	97	66	99	130
12	77	164	135	103	80	160	130	130		100
5										
01	267	293	268	273	256	276	340	243		252
02	91	87	100	104	118	160	90	110		115
03	133	157	132	147	107	125	134	220		187
04	283	265	314	294	289	267	291	303		314
05	109	108	85	80	76	91	67	71		92
06	153	191	206	176	164	208	237	222		372
07	206	235	245	220	213	239	231	257		234
08	197	182	173	211	123	139	201	143		206
09	209	210	206	192	193	204	188	182		191
10	141	141	140	117	129	116	195	193		171
11	372	388	398	398	406	394	308	364		410
12	94	144	144	125	119	124	127	133		119
6										
01	199	217	228	158	160	141	152	153		146
02	147	148	150	139	132	133	135	133		122

CAROLINA POWER & LIGHT COMPANY
SPECIAL SERVICES DEPARTMENT

ROBINSON WATER CHEMISTRY

TOTAL VOLATILE SOLIDS

MONTH/STATION	AS	AB	EE	EB	GS	GB	HS	IS	JS	KS
73										
04	32	22	11	39	15	24	9	20		
05	51	72	142	59	53	65	184	44		
06	4	10	19	16	42	44	24	71		
07	24	16	16	25	30	71	27	39		
08	25	24	25	17	21	28	22	25		
09	107	85	84	110	53	69	85	79		
10	84	90	83	109	111	112	90	101		
11	27	26	31	33	68	38	23	12		
12	109	106	106	122	103	83	74	81		
74										
01	42	35	121	24	130	171	125	51		
02	20	21	27	10	46	16	16	11		
03	50	48	63	50	62	64	58	49		
04	114	48	101	104	112	133	115	15		
05	75	54	74	60	76	84	63	64		
06	127	97	91	103	51	101	54	96		
07										
08	29	36	20	28	14	74	50	28		
09	24	28	47	32	37	45	19	29	28	25
10	158	113	102	112	117	121	108	119	130	129
11	77	81	75	74	62	79	51	52	58	78
12	29	110	96	69	13	117	86	87		64
75										
01	147	152	148	128	118	142	184	113		111
02	79	77	89	77	85	112	88	82		81
03	123	145	126	127	97	101	104	157		137
04	136	120	123	102	80	86	89	96		91
05	79	76	47	47	43	61	35	37		64
06	147	188	200	168	159	172	197	174		274
07	154	165	179	169	152	168	171	190		182
08	158	147	137	155	102	110	149	118		140
09	134	137	139	124	129	91	124	96		111
10	44	47	41	37	47	47	33	41		44
11	278	310	250	228	272	256	210	246		262
12	91	137	137	106	102	115	111	103		83
76										
01	169	175	185	133	119	118	118	128		117
02	79	87	112	99	99	94	114	116		117

CAROLINA POWER & LIGHT COMPANY
SPECIAL SERVICES DEPARTMENT

ROBINSON WATER CHEMISTRY

TOTAL SUSPENDED SOLIDS

MONTH/STATION	AS	BS	ES	EB	GS	GB	HS	IS	JS	KS
73										
04	4	9	7	2	4	5	11	7		
05	4	8	10	4	7	7	20	4		
06	2	4	2	4	5	12	11	11		
07	2	4	5	6	2	124	5	5		
08	14	18	12	16	12	12	12	14		
09	17	20	25	18	14	21	9	17		
10	13	9	14	11	5	11	12	14		
11	3	10	1	2	4	4	1	12		
12	4	9	8	9	4	4	6	3		
74										
01	17	16	7	7	5	82	4	5		
02	11	15	21	15	10	27	10	13		
03	23	26	27	29	31	28	29	30		
04	7	6	9	14	12	46	6	15		
05	144	144	145	145	150	225	146	156		
06	6	3	3	5	4	5	2	4		
07										
08	1	1	2	19	9	66	10	11		
09	11	14	22	44	24	22	24	24	18	30
10	13	32	14	22	24	26	22	14	16	6
11	6	24	14	26	22	28	34	20	22	28
12	4	18	28	22	14	17	26	18		20
75										
01	151	162	148	146	147	148	150	171		150
02	5	5	7	5	5	46	13	7		5
03	8	10	9	13	12	11	16	9		13
04	5	4	4	9	5	3	6	6		6
05	15	21	23	25	28	23	21	29		26
06	24	35	30	29	35	44	32	33		36
07	21	30	28	22	48	64	58	66		54
08	24	34	26	18	12	18	18	18		20
09	24	30	34	36	36	36	32	36		24
10	10	16	16	22	10	8	6	8		10
11	18	22	18	24	20	24	22	22		20
12	22	42	32	36	18	21	46	22		34
76										
01	11	11	12	11	8	12	13	12		11
02	5	12	9	13	12	12	12	11		12

4/73 - 7/73: 0.75 - 1.25 μ filter; 8/73 - 12/75: 1.20 μ filter

CAROLINA POWER & LIGHT COMPANY
SPECIAL SERVICES DEPARTMENT

ROBINSON WATER CHEMISTRY

TOTAL DISSOLVED SOLIDS

MONTH/STATION	AS	AB	ES	EB	GS	GB	HS	IS	JS	KS
73										
04	44	22	15	39	25	32	7	30		
05	62	108	154	77	69	74	196	92		
06	8	22	24	30	44	60	49	71		
07	31	25	19	29	32	46	35	50		
08	23	26	27	28	43	36	8	17		
09	82	103	67	83	68	82	112	87		
10	130	92	60	79	57	126	95	113		
11	47	27	30	25	42	4	3	22		
12	77	55	62	63	76	47	44	58		
74										
01	158	144	122	112	88	147	77	96		
02	31	23	9	26	22	51	23	23		
03	119	119	94	82	92	87	84	73		
04	110	123	103	121	117	107	93	123		
05	193	176	189	197	203	215	181	201		
06	139	115	95	136	118	84	100	70		
07										
08	59	46	53	26	34	37	106	54		
09	40	46	44	46	36	36	24	29	40	9
10	52	58	46	51	59	62	49	53	62	60
11	98	96	126	102	90	116	80	54	60	79
12	67	124	112	86	67	117	108	109		84
75										
01	204	181	176	209	203	202	275	204		205
02	60	59	60	55	57	57	34	71		47
03	113	149	109	115	94	106	101	100		107
04	228	232	244	231	238	99	113	104		103
05	35	33	31	33	37	42	31	27		27
06	125	108	82	122	99	116	120	138		238
07	174	182	139	189	162	148	218	240		220
08	128	150	170	202	76	106	138	132		200
09	150	198	140	132	150	150	158	150		180
10	104	122	120	98	106	100	170	170		158
11	322	362	372	376	376	338	290	322		314
12	85	108	136	112	115	102	92	92		100
76										
01	177	174	180	140	152	118	117	118		127
02	125	112	117	115	102	96	81	94		98

4/73 - 7/73: 0.75 - 1.25 μ filter; 8/73 - 12/75: 1.20 μ filter

CAROLINA POWER & LIGHT COMPANY
SPECIAL SERVICES DEPARTMENT

ROBINSON WATER CHEMISTRY

HEXAVALENT CHROMIUM (NEGATIVE SIGN SHOULD BE READ AS 'LESS THAN')

MONTH/STATION	AS	AB	ES	EB	GS	GB	HS	IS	JS	KS
1										
04	-0.050	-0.050	-0.050	-0.050	-0.050	-0.050	-0.050	-0.050		
05	-0.050	-0.050	-0.050	-0.050		-0.050	-0.050			
06	-0.050	-0.050	-0.050	-0.050	-0.050	-0.050	-0.050	-0.050		
07	-0.050	-0.050	-0.050	-0.050	-0.050	-0.050	-0.050	-0.050		
08	-0.050	-0.050	-0.050	-0.050	-0.050	-0.050	-0.050	-0.050		
09	-0.050	-0.050	-0.050	-0.050	-0.050	-0.050	-0.050	-0.050		
10	-0.005	-0.005	-0.005	-0.005	-0.005	-0.005	-0.005	-0.005		
11	-0.005	-0.005	-0.005	-0.005	-0.005	-0.005	-0.005	-0.050		
12	-0.005	-0.005	-0.005	-0.005	-0.005	-0.005	-0.005	-0.005		
6										
01	-0.005	-0.005	-0.005	-0.005	-0.005	-.005	-.005	-.005		
02	-0.005	-0.005	-0.005	-0.005	-0.005	-.005	-.005	-.005		
03	-0.005	-0.005	-0.005	-0.005	-0.005	-.005	-.005	-.005		
04	-0.005	-0.005	-0.005	-0.005	-0.005	-.005	-.005	-.005		
05	-0.005	-0.005	-0.005	-0.005	-0.005	-.005	-.005	-.005		
06										
07										
08	-0.05	-0.05	-0.05	-0.05	-.05	-.05	-.05	-0.05		
09	-0.05	-0.05	-0.05	-0.05	-.05	-.05	-.05	-0.05	-0.05	-0.05
10	-0.005	-0.005	-0.005	-0.005	-.005	-.005	-.005	-0.005	-0.005	-0.005
11	-0.005	-0.005	-0.005	-0.005	-.005	-.005	-.005	-0.005	-0.005	-0.005
12	-0.005	-0.005	-0.005	-0.005	-0.005	-0.005	-0.005	-0.005		-0.005
5										
01	-0.005	-0.005	-0.005	-0.005	-0.005	-0.005	-0.005	-0.005		-0.005
02	-0.005	-0.005	-0.005	-0.005	-0.005	-0.005	-0.005	-0.005		-0.005
03	-0.005	-0.005	-0.005	-0.005	-0.005	-0.005	-0.005	-0.005		-0.005
04	-0.005	-0.005	-0.005	-0.005	-0.005	-0.005	-0.005	-0.005		-0.005
05	-0.005	-0.005	-0.005	-0.005	-0.005	-0.005	-0.005	-0.005		-0.005
06	-0.005	-0.005	-0.005	-0.005	-0.005	-0.005	-0.005	-0.005		-0.005
07	-0.05	-0.05	-0.05	-0.05	-0.05	-0.05	-0.05	-0.05		-0.05
08	-0.050	-0.050	-0.050	-0.050	-0.050	-0.050	-0.050	-0.050		-0.050
09	-0.050	-0.050	-0.050	-0.050	-0.050	-0.050	-0.050	-0.050		-0.050
10	-0.050	-0.050	-0.050	-0.050	-0.050	-0.050	-0.050	-0.050		-0.050
11	-0.05	-0.05	-0.05	-0.05	-0.05	-0.05	-0.05	-0.05		-0.05
12	-0.05	-0.05	-0.05	-0.05	-0.05	-0.05	-0.05	-0.05		-0.05
6										
01	-0.05	-0.05	-0.05	-0.05	-0.05	-0.05	-0.05	-0.05		-0.05
02	-0.05	-0.05	-0.05	-0.05	-0.05	-0.05	-0.05	-0.05		-0.05

CAROLINA POWER & LIGHT COMPANY
SPECIAL SERVICES DEPARTMENT

ROBINSON WATER CHEMISTRY

TOTAL MERCURY (NEGATIVE SIGN SHOULD BE READ AS "LESS THAN")

MONTH/STATION	AS	DS	ES	EB	GS	GB	HS	IS	JS	KS
73										
04										
05										
06	-0.001	-0.001	-0.001	-0.001	-0.001	-0.001	-0.001			
07	-0.001	-0.001	-0.001	-0.001	-0.001	-0.001	-0.001	-0.001		
08	-0.001	-0.001	-0.001	-0.001	-0.001	-0.001	-0.001	-0.001		
09	-0.001	-0.001	-0.001	-0.001	-0.001	-0.001	-0.001	-0.001		
10	-0.001	-0.001	-0.001	-0.001	-0.001	-0.001	-0.001	-0.001		
11	-0.001	-0.001	-0.001	-0.001	-0.001	-0.001	-0.001	-0.001		
12	-0.001	-0.001	-0.001	-0.001	-0.001	-0.001	-0.001	-0.001		
74										
01	-0.001	-0.001	-0.001	-0.001	-0.001	-0.001	-0.001	-0.001		
02	-0.001	-0.001	-0.001	-0.001	-0.001	-0.001	-0.001	-0.001		
03	-0.001	-0.001	-0.001	-0.001	-0.001	-0.001	-0.001	-0.001		
04	-0.001	-0.001	-0.001	-0.001	-0.001	-0.001	-0.001	-0.001		
05	-0.001	-0.001	-0.001	-0.001	-0.001	-0.001	-0.001	-0.001		
06	-0.001	-0.001	-0.001	-0.001	-0.001	-0.001	-0.001	-0.001		
07										
08	-0.001	-0.001	-0.001	-0.001	0.001	-0.001	-0.001	-0.001		
09	-0.001	-0.001	-0.001	-0.001	-0.001	-0.001	-0.001	-0.001	-0.001	-0.001
10	-0.001	-0.001	-0.001	-0.001	-0.001	-0.001	-0.001	-0.001	-0.001	-0.001
11	-0.001	-0.001	-0.001	-0.001	-0.001	-0.001	-0.001	-0.001	-0.001	-0.001
12	-0.001	-0.001	-0.001	-0.001	-0.001	-0.001	-0.001	-0.001		-0.001
75										
01	-0.001	-0.001	-0.001	-0.001	-0.001	-0.001	-0.001	-0.001		-0.001
02	-0.001	-0.001	-0.001	-0.001	-0.001	-0.001	-0.001	-0.001		-0.001
03	-0.001	-0.001	-0.001	-0.001	-0.001	-0.001	-0.001	-0.001		-0.001
04	-0.001	-0.001	-0.001	-0.001	-0.001	-0.001	-0.001	-0.001		-0.001
05	-0.001	-0.001	-0.001	-0.001	-0.001	-0.001	-0.001	-0.001		-0.001
06	0.001	0.003	-0.001	0.001	0.002	0.002	0.001	0.001		0.001
07	-0.001	-0.001	-0.001	-0.001	-0.001	-0.001	-0.001	-0.001		-0.001
08	-0.001	-0.001	-0.001	-0.001	-0.001	-0.001	-0.001	-0.001		-0.001
09	-0.001	-0.001	-0.001	-0.001	-0.001	-0.001	-0.001	-0.001		-0.001
10	-0.001	-0.001	-0.001	-0.001	-0.001	-0.001	-0.001	-0.001		-0.001
11	-0.001	-0.001	-0.001	-0.001	-0.001	-0.001	-0.001	0.001		0.001
12	-0.001	-0.001	-0.001	-0.001	-0.001	-0.001	-0.001	-0.001		-0.001
76										
01	-0.001	-0.001	-0.001	-0.001	-0.001	-0.001	-0.001	-0.001		-0.001
02	-0.001	-0.001	-0.001	-0.001	-0.001	-0.001	-0.001	-0.001		-0.001

CAROLINA POWER & LIGHT COMPANY
SPECIAL SERVICES DEPARTMENT

ROBINSON WATER CHEMISTRY

TOTAL COPPER (NEGATIVE SIGN SHOULD BE READ AS 'LESS THAN')

MONTH/STATION	AS	AB	ES	EB	CS	GB	HS	IS	JS	KS
04	-0.050	-0.050	-0.050	-0.050	-0.050	-0.050	-0.050	-0.050		
05	-0.050	-0.050	0.050	0.050		-0.050	-0.050			
06	0.050	0.070	0.050	0.050	0.060	0.050	0.050			
07	0.090	0.090	0.100	0.100	0.100	0.080	0.070	0.100		
08	0.100	0.110	0.070	0.070	-0.050	-0.050	-0.050	-0.050		
09	-0.050	0.190	0.050	0.050	-0.050	0.130	0.060	-0.050		
10	0.050	0.060	0.070	0.060	-0.050	-0.050	-0.050	-0.050		
11	0.09	0.08	0.07	0.08	-0.05	-0.05	0.06	-0.05		
12	-0.050	-0.050	-0.050	-0.050	-0.05	-0.05	-0.050	-0.05		
01	0.08	0.09	0.09	0.09	0.07	0.08	0.10	0.04		
02	-0.05	0.05	-0.05	-0.05	-0.05	-0.05	-0.05	-0.05		
03	-0.05	-0.05	-0.05	-0.05	-0.05	-0.05	-0.05	-0.05		
04	0.05	0.10	0.18	-0.05	-0.05	-0.05	-0.05	-0.05		
05	-0.05	-0.05	-0.05	-0.05	-0.05	-0.05	-0.05	-0.05		
06										
07										
08	-0.04	-0.04	-0.04	-0.04	-0.04	-0.04	-0.04	-0.04		
09	-0.04	-0.04	-0.04	-0.04	-0.04	-0.04	-0.04	-0.04	-0.04	-0.04
10	0.07	0.07	-0.05	-0.05	-0.05	-0.05	0.07	-0.05	-0.05	0.07
11	0.08	0.09	0.07	0.09	-0.05	-0.05	0.07	-0.05	-0.05	0.06
12	-0.05	-0.05	0.05	0.05	-0.05	-0.05	-0.05	-0.05		-0.05
01	-0.05	0.05	0.05	0.06	-0.05	-0.05	-0.05	-0.05		-0.05
02	-0.05	-0.05	-0.05	-0.05	-0.05	-0.05	-0.05	-0.05		-0.05
03	-0.05	-0.05	0.05	-0.05	-0.05	-0.05	0.05	-0.05		-0.05
04	0.05	-0.05	0.05	0.05	-0.05	-0.05	-0.05	-0.05		-0.05
05	-0.05	-0.05	0.05	0.05	-0.05	-0.05	-0.05	-0.05		-0.05
06	-0.05	0.05	0.07	0.06	-0.05	-0.05	0.06	-0.05		0.10
07	0.07	0.07	0.08	0.08	0.08	-0.05	0.06	-0.05		0.06
08	0.05	-0.05	0.09	0.06	-0.05	-0.05	0.05	-0.05		-0.05
09	0.11	0.09	0.08	0.08	0.06	0.06	0.06	-0.05		0.06
10	0.06	0.06	0.06	0.06	-0.05	-0.05	-0.05	-0.05		0.05
11	0.07	0.09	0.09	0.09	-0.05	-0.05	0.08	-0.05		0.11
12	0.05	0.05	0.05	0.07	-0.05	-0.05	0.06	-0.05		0.05
01	0.06	0.07	0.07	0.07	-0.05	-0.05	0.05	-0.05		0.05
02	-0.05	-0.05	-0.05	-0.05	-0.05	-0.05	-0.05	-0.05		-0.05

CAROLINA POWER & LIGHT COMPANY
SPECIAL SERVICES DEPARTMENT

ROBINSON WATER CHEMISTRY

DISSLOVED COPPER (NEGATIVE SIGN SHOULD BE READ AS 'LESS THAN')

MONTH/STATION	AS	AB	ES	EB	GS		HS	IS	JS	KS
73										
04										
05										
06										
07	-0.050	-0.050	-0.050	-0.050	-0.050	-0.050	-0.050	-0.050		
08	-0.050	-0.050	-0.050	-0.050	-0.050	-0.050	-0.050	-0.050		
09	-0.050	-0.050	-0.050	-0.050	-0.050	-0.050	-0.050	-0.050		
10	-0.050	-0.050	-0.050	-0.050	-0.050	-0.050	-0.050	-0.050		
11	-0.05	-0.05	-0.05	-0.05	-0.05	-0.05	-0.05	-0.05		
12	-0.005	-0.005	-0.005	-0.005	-0.005	-0.005	-0.005	-0.005		
74										
01	-0.05	-0.05	-0.05	-0.05	-0.05	-0.05	-0.050	-0.05		
02	-0.05	-0.05	-0.05	-0.05	-0.05	-0.05	-0.050	-0.05		
03	-0.05	-0.05	-0.05	-0.05	-0.05	-0.05	-0.050	-0.05		
04	-0.05	-0.05	-0.05	-0.05	-0.05	-0.05	-0.050	-0.05		
05	-0.05	-0.05	-0.05	-0.05	-0.05	-0.05	-0.05	-0.05		
06										
07										
08										
09										
10										
11										
12										
75										
01										
02										
03										
04										
05	-0.05	-0.05	-0.05	-0.05	-0.05	-0.05	-0.05	-0.05		-0.05
06	-0.05	-0.05	-0.05	0.13	-0.05	-0.05	-0.05	-0.05		0.09
07	-0.05	-0.05	-0.05	-0.05	-0.05	-0.05	-0.05	-0.05		-0.05
08										
09	0.05	-0.05	0.05	0.05	-0.05	-0.05	-0.05	-0.05		-0.05
10	-0.05	-0.05	-0.05	-0.05	-0.05	-0.05	-0.05	-0.05		-0.05
11	-0.05	-0.05	-0.05	-0.05	-0.05	-0.05	-0.05	-0.05		-0.05
12	-0.05	-0.05	-0.05	-0.05	-0.05	-0.05	-0.05	-0.05		-0.05
76										
01	0.06	-0.05	0.07	0.06	-0.05	-0.05	0.06	-0.05		0.06
02	-0.05	-0.05	-0.05	-0.05	-0.05	-0.05	-0.05	-0.05		-0.05

CAROLINA POWER & LIGHT COMPANY
SPECIAL SERVICES DEPARTMENT

ROBINSON WATER CHEMISTRY

TOTAL ZINC (NEGATIVE SIGN SHOULD BE READ AS 'LESS THAN')

MTH/STATION	AS	AB	ES	EB	GS	GB	HS	IS	JS	KS
04	0.040	0.080	-0.050	-0.050	-0.050	-0.030	-0.050	0.150		
05	1.050	0.070	0.060	0.110		0.050	0.050			
06	0.180	0.100	0.060	0.080	0.080	0.060	0.090			
07	-0.050	0.050	0.060	0.060	0.050	-0.050	0.050	0.070		
08	-0.060	0.060	0.050	0.060	-0.050	-0.050	-0.050	-0.050		
09	-0.050	0.050	0.060	0.060	-0.050	-0.050	0.050	-0.050		
10	0.050	0.050	0.050	0.060	-0.050	-0.050	0.050	-0.050		
11	0.07	-0.05	-0.05	0.05	0.05	-0.05	-0.05	0.05		
12	-0.05	-0.05	-0.05	0.07	-0.05	-0.05	-0.05	0.11		
01	-0.05	0.05	-0.05	-0.05	0.06	-0.05	-0.05	-0.05		
02	-0.05	-0.05	-0.05	-0.05	-0.05	-0.05	-0.05	-0.05		
03	-0.05	-0.05	-0.05	-0.05	-0.05	-0.05	-0.05	-0.05		
04	-0.05	-0.05	-0.05	-0.05	-0.05	-0.05	-0.05	-0.05		
05	-0.05	-0.05	-0.05	-0.05	-0.05	-0.05	-0.05	-0.05		
06										
07										
08	1.01	0.07	0.13	0.09	-0.05	0.47	0.09	0.11		
09	-0.05	-0.05	-0.05	-0.05	-0.05	-0.05	-0.05	-0.05	-0.05	-0.05
10	0.06	0.05	0.18	0.07	0.06	-0.05	0.05	-0.05	-0.05	0.05
11	0.08	0.10	0.05	0.18	0.05	0.05	0.07	0.22	0.06	0.07
12	-0.05	0.06	0.06	0.05	-0.05	-0.05	-0.05	-0.05		-0.05
01	0.13	0.05	0.05	0.11	0.07	0.04	0.18	0.16		0.11
02	0.07	0.08	0.08	0.07	0.09	0.11	0.07	0.05		0.07
03	-0.05	-0.05	-0.05	-0.05	-0.05	-0.05	-0.05	-0.05		-0.05
04	-0.05	-0.05	-0.05	-0.05	-0.05	-0.05	-0.05	-0.05		-0.05
05	0.06	-0.05	0.05	0.05	-0.05	-0.05	-0.05	-0.05		-0.05
06										
07	0.06	0.05	0.07	0.06	0.05	-0.05	0.08	0.11		0.07
08			0.10							
09										
10			0.05							
11			0.07							
12			0.05							
01										
02	-0.05	-0.05	-0.05	-0.05	-0.05	-0.05	-0.05	-0.05		-0.05

CAROLINA POWER & LIGHT COMPANY
SPECIAL SERVICES DEPARTMENT

ROBINSON WATER CHEMISTRY

DISSLOVED ZINC (NEGATIVE SIGN SHOULD BE READ AS 'LESS THAN')

MONTH/STATION	AS	AB	ES	EB	GS	GB	HS	IS	JS	KS
73										
04										
05										
06										
07	-0.050	-0.050	-0.050	-0.050	-0.050	-0.050	-0.050	-0.050		
08	-0.050	-0.050	-0.050	-0.050	-0.050	-0.050	-0.050	-0.050		
09	-0.050	-0.050	-0.050	-0.050	-0.050	-0.050	-0.050	-0.050		
10	-0.050	-0.050	-0.050	-0.050	-0.050	-0.050	-0.050	-0.050		
11	-0.05	-0.05	-0.05	-0.05	-0.05	-0.05	-0.05	-0.05		
12	-0.05	-0.05	-0.05	-0.05	-0.05	-0.05	-0.05	-0.05		
74										
01	-0.05	-0.05	-0.05	-0.05	-0.05	-0.05	-0.050	-0.05		
02	-0.05	-0.05	-0.05	-0.05	-0.05	-0.05	-0.050	-0.05		
03	-0.05	-0.05	-0.05	-0.05	-0.05	-0.05	-0.050	-0.05		
04	-0.05	-0.05	-0.05	-0.05	-0.05	-0.05	-0.050	-0.05		
05	-0.05	-0.05	-0.05	-0.05	-0.05	-0.05	-0.050	-0.05		
06										
07										
08										
09										
10										
11										
12										
75										
01										
02										
03										
04										
05										
06										
07	-0.05	-0.05	-0.05	-0.05	-0.05	-0.05	-0.05	-0.05		-0.05
08										
09										
10										
11										
12										
76										
01										
02	-0.05	-0.05	-0.05	-0.05	-0.05	-0.05	-0.05	-0.05		-0.05

CAROLINA POWER & LIGHT COMPANY
SPECIAL SERVICES DEPARTMENT

ROBINSON WATER CHEMISTRY

TOTAL ALUMINUM (NEGATIVE SIGN SHOULD BE READ AS 'LESS THAN')

MONTH/STATION	AS	AB	ES	EB	GS	GB	HS	IS	JS	KS
04	0.300	0.320	0.430	0.290	0.230	0.300	0.480	0.260		
05	0.35	0.310	0.270	0.310		0.210	0.400			
06	0.300	0.260	0.280	0.280	0.310	0.340	0.310			
07	0.24	1.70	0.41	0.43	0.29	0.29	0.40	0.33		
08	0.32	0.42	0.41	0.70	0.31	0.54	0.25	0.12		
09	0.26	0.78	0.34	0.41	0.41	0.73	0.37	0.26		
10	0.24	0.48	0.38	0.99	0.32	0.26	0.38	0.32		
11	0.23	0.19	0.23	0.25	0.43	0.20	0.24	0.14		
12	0.25	0.29	0.29	0.24	0.20	0.20	0.28	0.22		
01	0.12	0.66	0.20	0.21	0.16	0.51	0.23	0.20		
02	0.14	0.77	0.14	0.14	0.23	0.21	0.11	0.19		
03	0.30	0.22	0.25	0.23	0.30	0.27	0.22	0.25		
04	0.20	0.20	0.25	0.45	0.28	0.27	0.23	0.25		
05	0.22	0.17	0.18	0.25	0.25	0.93	0.25	0.45		
06										
07										
08	0.34	0.82	2.42	1.60	1.60	4.95	1.40	1.64		
09	-0.25	-0.25	-0.25	0.50	-0.25	-0.25	-0.25	0.39	-0.25	-0.25
10	0.19	0.19	0.18	0.13	0.12	0.18	0.17	0.15	0.12	0.30
11	0.2	0.2	0.1	0.2	0.1	0.2	0.2	0.2	0.1	0.2
12	0.20	0.40	0.20	0.20	0.20	0.30	0.20	0.20		0.20
01	0.1	0.6	0.2	0.2	0.2	0.4	0.3	0.2		0.2
02	0.17	0.26	0.18	0.17	0.18	0.57	0.28	0.17		0.18
03	0.20	0.30	0.30	0.20	0.10	0.20	0.30	0.10		0.30
04	0.17	0.25	0.22	0.18	0.23	0.16	0.30	0.21		0.35
05	0.29	0.30	0.32	0.30	0.25	0.23	0.29	0.33		0.30
06	0.3	0.3	0.3	0.3	0.3	0.4	0.4	0.4		0.4
07	0.3	0.3	0.2	0.2	0.3	0.3	0.4	0.4		0.3
08	0.2	0.4	0.3	0.4	0.3	0.3	0.3	0.4		0.3
09	0.3	0.3	0.2	0.2	0.2	0.2	0.3	0.2		0.3
10	0.3	0.4	0.3	0.3	0.2	0.3	0.3	0.3		0.3
11	0.2	0.5	0.3	0.3	0.3	0.3	0.5	0.3		0.3
12	0.3	0.4	0.2	0.3	0.2	0.2	0.4	0.2		0.3
01	0.3	0.3	0.3	0.2	0.2	0.2	0.3	0.1		0.3
02	0.2	0.2	0.2	0.2	0.2	0.2	0.3	0.2		-0.1