SUPPORT SYSTEMS FOR AN UNDERGROUND HIGH-LEVEL NUCLEAR-WASTE REPOSITORY, HANFORD, WASHINGTON

Dr. Michael Sokaski and Paul F. Sands

Spokane Research Center

8904050488 880131
PDR WMRES EUSDOIMI
B-6934 PDC

CONTENTS

Page

Executive summary 1

Introduction 2

High-temperature mine environments 3

Characteristics of basalt 3

Assessment of support systems 5

Rock bursts 7

Description of supports 8

Mathematical modeling 9

Empirical design of support systems 11

Scoping calculations 15

Ranking of support systems 17

Summary and conclusions 17

Research recommendations 18

References 20

Appendix 1. - State-of-the-art and physical properties of rock support systems.

Appendix 2. - Corrosion of supports, Hanford, Washington.

Appendix 3. - Relative experience, high temperature rock support.

ILLUSTRATIONS

Figure 1. - Effect of depth on rock temperature 4

Figure 2. - Effect of time on temperature for a nuclear waste repository in basalt 6

Figure 3. - Results of a pull test on a 3/4-in diameter, 4-ft long fully grouted rock bolt 16

TABLE

Table 1. - Recommended roof reinforcement 12

SUPPORT SYSTEMS FOR AN UNDERGROUND HIGH-LEVEL NUCLEAR-WASTE REPOSITORY, HANFORD, WASHINGTON

Dr. Michael Sokaski and Paul F. Sands, Spokane Research Center

EXECUTIVE SUMMARY

Support systems that are currently used underground were reviewed with emphasis on those that were judged suitable for underground, high-level, nuclear-waste repositories. Support systems are available that are suitable during the construction phase of the repository at Hanford where the rock temperature is 52° C (125° F) as mines are currently operating at greater depths and temperatures.

The maximum rock temperature at Hanford is estimated by DOE to be 200° C (392° F). Some of the supports may reach this temperature, but the maximum temperature attained by most and possibly all of the supports is expected to be lower. No information is available on support systems at the higher temperatures. Supports constructed from steel and concrete were investigated in greatest detail because these materials are suitable at elevated temperatures. Supports using these materials include fully grouted rock bolts with inorganic grout, cable bolts, steel arches and sets, concrete liners, and shotcrete. Special compositions may be necessary for concrete and special alloys along with some means of corrosion protection may be required for steel. Other materials could also be used particularly with regard to superior corrosion and deterioration resistance, but their selection would require justification involving trade-offs based on economy, performance, and safety. Testing is required in the actual or simulated repository environment to determine the corrosion and deterioration characteristics of these materials. Many of the factors that lead to corrosion and deterioration of support materials and preventative measures are described.

The usual methods for selecting underground support systems were reviewed. The first was an attempt to collect information and data on support systems used successfully in similar and preferably identical conditions. This method was not possible for the Hanford site because no deep underground openings exist in basalt or basalt-like rock.

A second method was an investigation on the possibility of using mathematical modeling as an aid to the design process. However, the input parameters that are characteristic of the candidate site are imprecisely known and therefore the utility of mathematical modeling is limited at this time. However, parametric investigations are possible that determine the sensitivity of the various input parameters.

The third method is empirical and based on case histories of successful underground support systems. A support system based on Barton's empirical Q system has been suggested by DOE for the Hanford repository, but again the available data for determining the input parameters is deficient. However, this design, which uses rock bolts and shotcrete, is probably the best that can be accomplished at this time.

A conclusion from this investigation is that insufficient information and data are now available to design a support system with a high degree of confidence for the Hanford site. Cracks and joints, which are a characteristic of basalt, can absorb thermally and mechanically induced deformations and substantially influence stresses and strains in both supports and surrounding rock. In addition, cracks and joints have a significant influence on the transmission of water which is a major design consideration for support systems. Furthermore, the various parameters, such as the modulus of elasticity, coefficient of thermal expansion, thermal conductivity, and Poisson's ratio, which also influence rock deformations and stresses, are temperature dependent. These factors are unknown for the Hanford site, but they should be accurately determined as an initial step in the design process.

More information is needed on the hydrothermal alteration of basalt. Dissolution of asperities along joints and fractures as well as dissolution of glass and other basalt minerals can significantly weaken the rock and thus affect support requirements.

The potential for dynamic loads on the support system should be evaluated. These loads could result from earthquakes and rock bursts. The Wallula fault near the Hanford site has been identified as capable of producing earthquakes. Less prominent faults are also in the area. All faults near the repository site should be mapped and their potential for movement and release of seismic energy should be estimated.

Investigators at the Stripa site have emphasized the importance of carrying out large-scale investigations in a field test facility. These investigations have not been done for the Hanford site, but the many deiciencies in the presently available information have been recognized by DOE and is the basis of their proposed site characterization project. A primary conclusion of this investigation is that a site characterization study for the Hanford site has substantial merit and is strongly recommended. The results will provide the much needed information and data base that is essential to design a satisfactory support system for the repository.

INTRODUCTION

Underground repositories have been proposed for the storage of high-level nuclear waste. The geological formations that are presently under active consideration are tuff, flood basalt, and bedded salt. Maximum rock temperature can reach as high as 200° C (392° F) largely from heat generated by radioactive decay processes although most and possibly all of the supports are not expected to reach this temperature (1). This temperature constraint raises the question as to what types of support systems would be applicable in a high-temperature environment. Consequently, the U.S. Bureau of Mines conducted an investigation to determine the high-temperature aspects of ground support in underground repositories.

This investigation centered on five tasks. In Task I, the many methods that are currently used for support in underground mines was reviewed. A study of the support systems currently used in high-temperature mine environments was involved in Task II. The effects of high temperatures on materials that are or could be used to construct supports and the thermomechanical properties of

host rocks was Task III. In Task IV, support systems that would be suitable for repositories were examined. Task V was a summary of the above tasks with conclusions and with emphasis on research and development needs. These tasks, although not specifically identified in this report, were nonetheless the main focus of this investigation.

HIGH TEMPERATURE MINE ENVIRONMENTS

The highest temperatures encountered in mining are in deep mines where the ambient rock can reach 66° C (150° F), Figure 1 (2). This temperature is substantially below the maximum expected rock temperatures in repositories. Miners can not work in for any reasonable length of time if the wet-bulb temperature exceeds about 29° C (85° F), but this temperature varies with the humidity, air velocity, and heat acclimatization of personnel. Cooling systems are often necessary. An example is at the Magma Mine where an elaborate air conditioning system is used (3). Appendix 3 gives additional information on high temperature rock support.

CHARACTERISTICS OF BASALT

Basalt is a fine-grained, dark-colored, mafic, igneous rock that is commonly extrusive. The Columbia flood basalt covers about 78,000 square miles and is as much as 16,000-ft thick. The Cohassett Flow is the candidate flow for the Hanford repository, and its flow interior will contain the repository. It consists of a lateral zone of vesicular basalt and alternating tiers of entablature and colonnade.

The dense interior of the Cohassett flow contains vertical columnar joints that are fractured horizontally. Estimated joint volume is 12.8 joints/m^3 (4). For the entablature, the estimated joint volume is 24.7 joints/m^3 (4). Joint surfaces vary substantially from smooth and planar to rough and undulating. Joint filling thicknesses range from 0.025 to 0.70 mm with the predominant thickness about 0.05 mm (4). The joints are filled with montmorillonite clay which can be assumed to contain water. The following data were obtained from the many documents reviewed on the Hanford repository and are considered baseline data for this investigation:

Reference basalt flow	Cohassett	(1)
Depth to bottom of flow interior, m (ft)	983 (3,224)	(1)
Estimated total thickness of flow interior, m (ft)	68.1 (223)	(1)
Intact compressive strength, colonnade, MPa (lb/in^2)	288 (41,800)	(1)
Allowable rock stress in emplacement borehole, MPa (lb/in^2)	200 (29,100)	(1)
Allowable rock stress in emplacement room, MPa (lb/in^2)	157 (22,800)	(1)

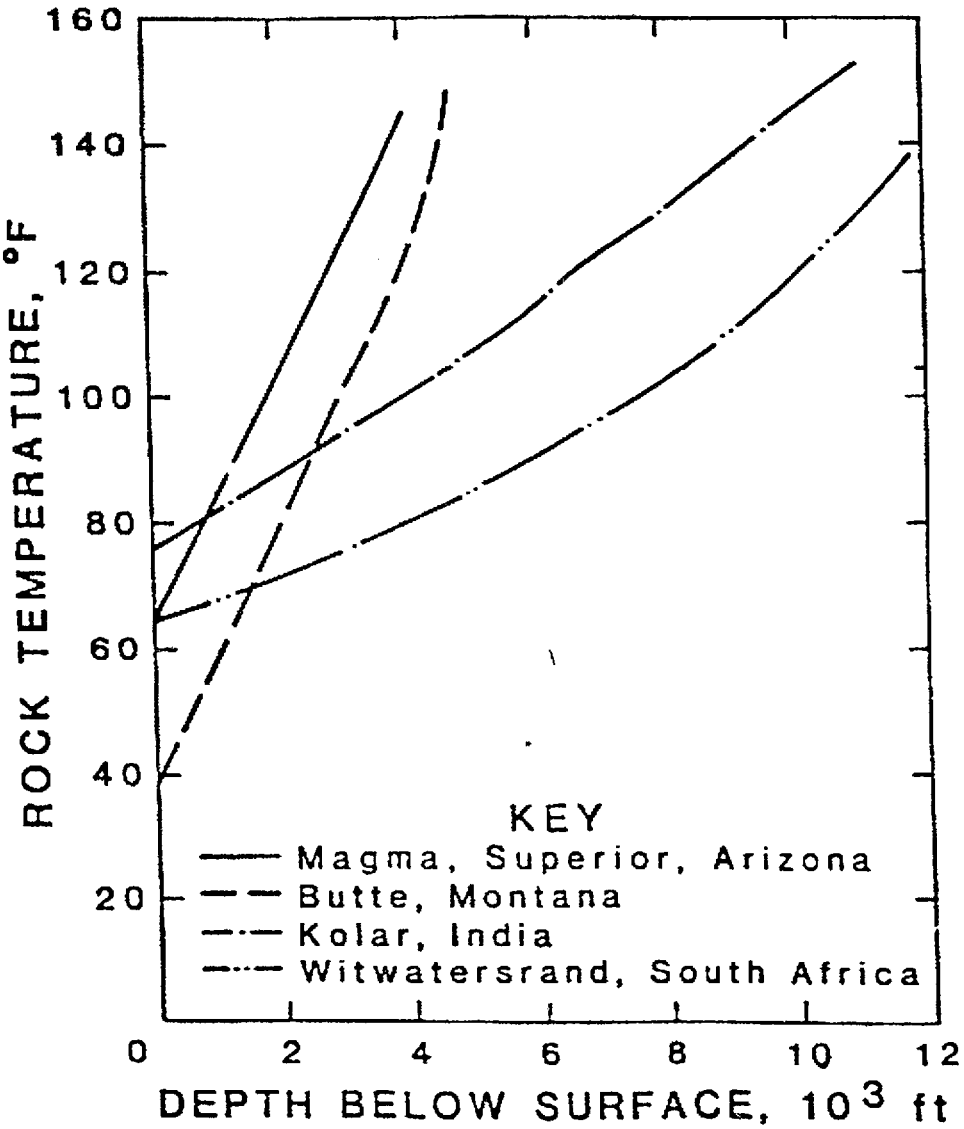

Figure 1.- Effect of depth on rock temperature (adapted from Hartman).

Maximum in situ stress, MPa (lb/in^2)	61.5 (8,920)	(5)
In situ stress ratio (maximum horizontal to vertical)	2.5:1	(5)
Maximum in situ stress direction	N. 6 E.	(5)
Young's modulus, GPa (lb/in^2)		(6)
entablature	75.60 (10,960,000)	
colonnade	72.76 (10,550,000)	
Bulk density g/cm^3 (lb/ft^3)		(6)
entablature	2.84 (177.3)	
colonnade	2.81 (175.4)	
Poisson's ratio	0.25	(6)
Ambient rock temperature C (F)	52 (125)	(1)
Maximum rock temperature C (F)	200 (392)	(1)

Many of these data will be modified by the elevated temperatures that can be attained in the repository.

The maximum rock temperature, according to the Environmental Assessment (EA), will be 200° C (392° F), but this temperature is not expected to be reached in the underground entries of the repository if the ventilation plan suggested by DOE is followed as these entries will be ventilated up to the time of backfilling (7).

ASSESSMENT OF SUPPORT SYSTEMS

Support systems were reviewed to determine their relative suitability to the baseline requirements. These requirements contain two different sets of conditions: a low temperature period extending from the beginning of excavation to the start of waste emplacement, and a high temperature period extending to closure of the repository. The first period includes a constant rock temperature of 52° C (125° F) for the time required for construction and before the effects of heat from emplaced radioactive material reaches areas of underground excavation. The second includes a 15-year temperature rise from 52° C (125° F) to 200° C (392° F) where it decreases gradually for about 70 years. Figure 2 shows the expected thermal profile (7).

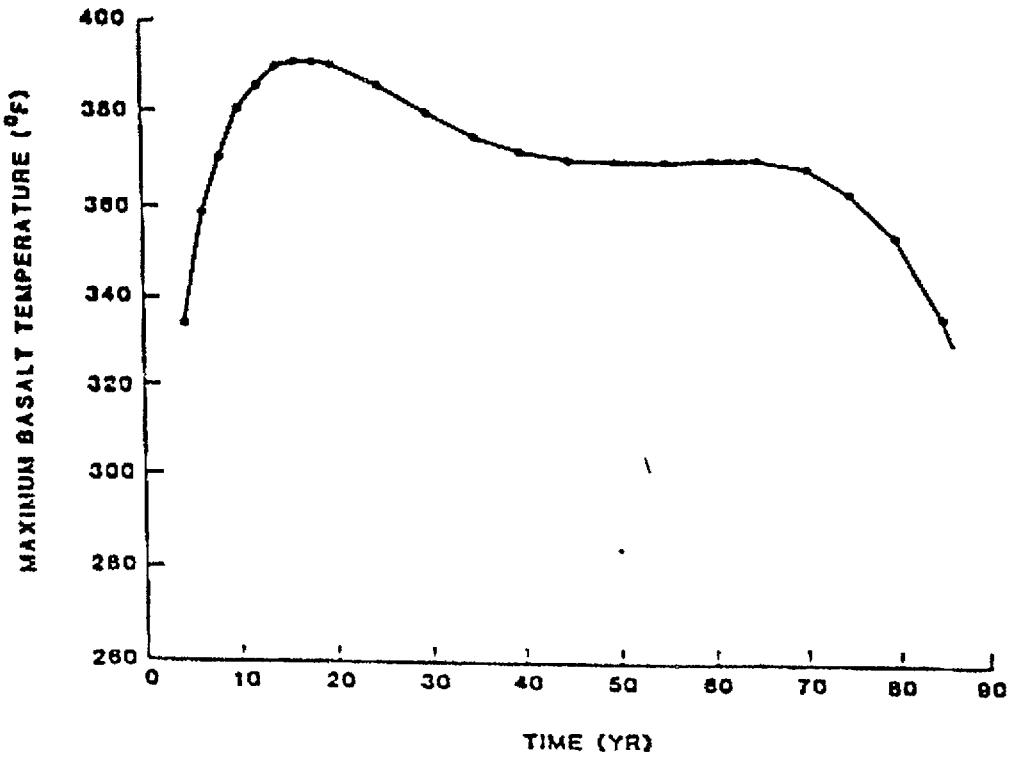

Figure 2.- Effect of time on temperature for a nuclear waste repository in basalt (adapted from Repository Design Development).

Rock Bursts

Underground support during initial excavation of the repository, i.e. before emplacement of nuclear waste and with a maximum rock temperature of 52° C (125° F), should not present any insurmountable technical problems. Deep underground mines are now operating under similar rock stress and temperature conditions, and technical solutions to support problems are available. However, an important consideration is the possibility of rock bursts.

A rock burst is a rock failure accompanied by a sudden and violent release of energy. The rock failure can range from popping of small rock fragments, through slabbing of large pieces of rock, to catastrophic failure of many tons of rock which are thrown into an underground opening with explosive force. In the mining industry, only the latter is usually called a rock burst, while less violent failures, e.g. slabbing, are also called rock bursts in construction and tunneling. Severe rock bursts are extremely hazardous and can result in substantial damage and loss of life.

Four conditions must be present for a rock burst to occur. First, the rock must be highly stressed. Second, a triggering stress is required. This stress may be from a gradual increase as the rock adjusts to the opening or a rapid increase such as from blasting. Third, the rock mass must be strong and brittle. Fourth, sufficient stored energy must be available to generate ample seismic energy to produce a burst. Experience in South Africa indicates that the frequency of rock bursts increases substantially when the energy released per unit area mined exceeds 30 MJ/m^2 (14,300 ft lbs/in^2) for undisturbed ground but can be as low as 15 MJ/m^2 (7,150 ft lbs/in^2) for geologically disturbed ground (8).

In the mining industry, the most effective way to reduce rock bursts is by mine designs that prevent stress concentrations from reaching critical levels. In addition, excavation sequencing and, when possible, allowing sufficient time for stress adjustment within the rock mass are effective in reducing rock bursts.

Destressing is also a means for preventing or reducing the severity of rock bursts (9). Long holes are drilled in the rock followed by blasting that is sufficient to fracture the rock. Movement along these fracture surfaces prevents the accumulation of excessive stress. Destressing is probably an unacceptable method for controlling rock bursts in a repository because the fractures could introduce additional pathways for the migration of radionuclides.

Earthquakes, which are seismic events similar to rock bursts, can also cause severe damage underground. Rock bursts and earthquakes are believed by some investigators to be the same phenomenon (10). Release of seismic energy along faults or other geologic discontinuities, such as dikes, is the principal cause of earthquakes. For example, a shear-slip mechanism along a fault has been identified as the cause of a series of rock bursts in June-July 1984, at the Creighton Mine and neighboring Falconbridge Mine, Sudbury District, Ontario, Canada (11). Damage was extensive. The Wallula fault near the Hanford site has been identified as capable of producing earthquakes (12). Less prominent faults are also in the area. All faults in and near

the Hanford site should be evaluated as to their potential for movement and release of seismic energy. It should be noted, however, that seismic energy decreases abruptly with distance from the source. Therefore, only those seismic events in the immediate vicinity of underground openings are likely to cause failure of supports (13).

Support systems have been developed that are applicable to mines prone to rock bursts. The supports are designed to yield under sudden dynamic loads while maintaining their structural integrity. The most common are yielding rock bolts (see Appendix 1 for descriptions of yielding rock bolts).

At the Hanford site, rock at the repository level is highly stressed and therefore an important factor favoring rock bursts. On the other hand, only a relatively small amount of rock would be removed compared to most underground mines. Therefore stress concentrations from removal of rock, e.g. in pillars, would be much less. Also, the basalt is highly jointed. These latter two factors tend to reduce rock bursts. Consequently, the frequency and severity of rock bursts at the Hanford site is difficult to predict. However, it should be noted that rock bursts have occurred in tunnels where high rock stresses were the most important factor (14, 15).

Description of Supports

A summary of supports under repository conditions is as follows (a more complete description is given in Appendix 1):

Wood supports - Wood is inexpensive but is unacceptable except for possibly temporary supports. It can deteriorate rapidly at elevated temperatures and humidity. Wood structural properties are typically inconsistent which precludes adequate quality control. Also, wood supports are a fire hazard.

Resin grouted rock bolts - Resins do not corrode, protect rock bolts from corrosion, and are easy to install. However, resins now used by the mining and construction industries can not be used in repositories because they lose substantial strength at elevated temperatures. Some resins reportedly have better elevated-temperature strength but have not been adapted to support use by the construction and mining industries.

Point anchored bolts - Because these bolts anchor over only a short distance, the anchors commonly slip and therefore require a retorquing program. Retorquing would be costly because repositories require maintenance for up to 100 years.

Roof trusses - Roof trusses can support roof that is fractured, but they are mainly applicable to flat roofs. They also require retorquing.

Rigid steel liners - Rigid steel liners are strong and offer full protection, but commonly require backfilling with a material such as sand, gravel, or foam concrete. Also, some form of corrosion protection will probably be required.

Yieldable steel arches and rings - These supports yield under high loads rather than fail, but periodic inspections are required because the yielding mechanism can become inoperable. Corrosion protection is probably required.

Concrete supports - Concrete liners, concrete blocks, shotcrete, and foam concrete are generally satisfactory in heavy ground and maintain their strength to temperatures well above maximum repository temperature. Concrete could deteriorate in some combinations of ground water and temperature.

Rock bolts fully grouted with inorganic grout - Because the bolts are fully grouted, they are anchored to the rock over their entire length and therefore are suitable in fractured andjointed rock. Unlike resin grouts, inorganic grouts maintain strength to temperatures well above maximum repository temperature. The amount of support can be easily changed by increasing or decreasing the number of bolts. The grout provides corrosion protection. Covering the rock and bolts with wire mesh and shotcrete adds additional support and corrosion protection.

Cable bolts - Cable bolts are useful where space limits the length of rigid rock bolts. Because the cables are fully grouted with inorganic grout, they maintain support strength at repository temperatures. Cable bolts can elongate substantially without failure. This yielding may be advantageous in heavy ground or to accommodate shock loads but may be undesirable if yielding allows the cracks in the rock to open and reduce the shear strength of the rock mass.

Yielding bolts - Because of their ability to yield with load, they may be required if dynamic loads or large ground movements are anticipated. Corrosion, and therefore reliability, may be a problem.

Friction stabilizer bolts - These bolts are not corrosion resistant, and are not capable of supporting heavy ground.

Mathematical Modeling

The high temperatures that may be encountered in the Hanford repository are substantially above the temperatures experienced by the mining industry. Therefore, the design of supports under these high temperature conditions can not be verified from present practice or experience. However, several support systems can be eliminated immediately simply because some of the support components are inadequate at high temperatures. An example is the resin grouted rock bolts that are currently used by the mining industry.

Other support systems that are classed as possibly applicable require additional investigation. One approach is mathematical modeling using appropriate parameters, such as in situ stresses, for each site. Mathematical modeling of the rock stresses around underground openings at the Hanford site has been reported (7). Both two and three dimensional modeling were used and the effects of thermally-induced stresses were considered. However, many of the parameters used in this study are imprecisely known. For example, it has been reported that the coefficient of thermal expansion, thermal conductivity, Young's modulus, and Poisson's ratio are temperature dependent (16, 17). The temperature dependence of these parameters was not considered in the Hanford study. Calculations of displacements and stresses in the rock around underground openings in repositories should consider these parameters as variables and not constants. Also, cracks, cleavage planes, and inclusions can significantly affect thermal expansion curves and

therefore greatly influence stresses and displacements (18). For example, measurements during full-scale heater tests at Stripa indicated that measured rock displacements due to heating were substantially less than the calculated displacements indicating stresses no more than half the predicted values (19).

The stress field at the Hanford site is dominated by a large compressive stress due to tectonic forces. This maximum horizontal stress, which was determined by hydraulic fracturing tests in boreholes, is 61.5 MPa (8,920 lbs/in^2) in a N. 6 E. direction, while the minimum stress, which is in the vertical direction, is 24.2 MPa (3,510 lbf/in^2) (5).

These estimated magnitudes and directions of the principal stresses in the rock at repository depth may not be sufficiently accurate to obtain meaningful results from mathematical modeling. Investigations at Stripa showed that reliable predictions of in situ stresses at depth can not be made on the basis of a few measurements or by extrapolating the results of measurements taken at shallow depths (20). Also, the investigators concluded that interpretation of hydraulic fracture tests to determine in situ stresses remains uncertain; both hydraulic fracture and overcoring tests are recommended. Furthermore, stress measurements at Stripa showed that stress orientations change significantly over distances of a few hundreds of meters. Hydraulic fracture tests in four bore holes that intersected the repository horizon with only three within the repository boundary were used at Hanford to estimate in situ stresses, and uncertainties in interpretation of these tests have been recognized (5).

In view of the deficiencies and uncertainties in interpreting hydraulic fracture tests to estimate in situ stresses and the failure to consider the influence of cracks, joints, and temperature on the input parameters, there is some question as to the adequacy of the mathematical modeling reported to date for the Hanford site. (More pertinent information on the influence of the many factors that affect the characteristics of cracks and joints is given in the following section on empirical support designs). It can be concluded that the mathematical modeling results to date can be used only as an aid in making preliminary estimates of support requirements largely because of an inadequate data base. A more refined study using parameters derived with additional measurements is necessary before a support system can be designed with a reasonable degree of confidence using mathematical modeling as one of the inputs to the design process.

Aside from the deficiencies mentioned above, two general shortcomings of mathematical modeling should be noted. One is the difficulty of incorporating the influence of the myriad cracks and joints, which are characteristic of basalt, into mathematical models. In addition, satisfactory methods have not been developed for incorporating into mathematical models the response of supports on the rock. The Bureau of Mines is currently conducting research to attain solutions to these two problems.

In view of the lack of a more precise data base on the Hanford site and the current deficiencies in mathematical modeling, the utility of this method as an aid to designing support systems is limited. However, these deficiencies do not rule out some uses for mathematical modeling. Parametric studies are

possible in which the relative sensitivity of the various input parameters could be determined.

Empirical Design of Support Systems

The Environmental Assessment (EA) for the Hanford site contains a suggested support design, which is largely based on the rock quality system developed by Barton (1). The Q system is based on 212 case studies of the rock characteristics at underground excavations and the required support. The basic characteristics of the rock that must be determined to use the Q system are number of joint sets, joint roughness, joint alteration, amount of water in joints, and a stress reduction factor. Numerical values are assigned to each of these characteristics to arrive at a Q value. The support requirements are then estimated from this Q value and are given in Table 1 from the EA (Table 6-17 in EA). By using the Q system, a combination of rock bolts and shotcrete is proposed.

The support design recommended by Barton can be considered only a rough approximation. Some of the shortcomings of this support recommendation for the Hanford site are as follows:

1. Experience in excavating and maintaining underground openings in basalt, e.g. tunnels and power stations, is confined to shallow depths. No openings have been excavated at repository depth. Failure around openings at shallow depths are by structurally controlled processes that are largely a response to gravity forces. At greater depths, failure is driven largely by the interaction between the stress field and rock mass strength.

   The Q system is largely based on case studies of underground excavations at relatively shallow depth where the stress levels are substantially lower than at repository depth. This deficiency has been recognized and noted in the EA. More case studies are needed on support requirements for deeper excavations.

2. The Q system considers the characteristics of joints and fractures that determine the resistance to movement along these discontinuities, but the high in situ stresses at repository depth tends to close them. Furthermore, the addition of heat from nuclear waste expands the rock and causes additional closure. Experiments at Stripa indicate significant fracture closure when the rock was heated (21). Clearly, the characteristics of cracks and joints that were determined from outcrops of the Cohassett flow may not be representative of these characteristics at repository depth.

3. More precise information is needed on the hydrologic conditions at repository depth. For example, the Q system requires an estimate of the amount of water flowing through cracks and joints, and only a very approximate estimate can be given at this time. The water at the repository depth has been estimated to be over 10,000 years old which suggests that water flow under pre-emplacement conditions is very slow (22). Water inflow through joints and fractures decreases resistance to shear movement compared to dry surfaces. As water inflow increases, shear resistance decreases (4). Water flow between flat plates follows

Table 1.- Recommended roof reinforcement

Drift type	Portion of Cohassett flow	Bolt spacing, m (ft)	Shotcrete thickness, cm (in.)
Emplacement room, panel entry, and main entry	Colonnade	0.8 (2.6)	5 (2)
	Entablature	—	5 (2)
	Vesicular	0.8 (2.6)	5 (2)[a]
Confinement returns, panel cross cuts, back-reaming drifts, and other panel cross cuts	Colonnade	1.0 (3.3)	2.5 (1)
	Entablature	—	5 (2)
Intersections	Colonnade	0.8 (2.6)	5 (2)
	Entablature	0.8 (2.6)	5 (2)
Any[b]	Flow interior[b]	0.8 (2.6)	20 (8)

NOTE: After Barton (1986, p. 85).
[a]Fiber reinforced.
[b]Extreme local condition.

the well-known cubic law, i.e. flow is proportional to the cube of the spacing. However, experiments with rock fractures under applied normal forces indicate that the cubic law at high normal forces is not followed, and the water flow is much lower than predicted (23). The reduced flow is attributed to the roughness or asperity characteristics of fracture surfaces. Conversely, hydraulic conductivity increases markedly if shear movement occurs along fractures which has been attributed to dilation between the fracture surfaces (24). Heat from radioactive material also tends to close cracks. Investigations at Stripa indicated the closure of fractures by heat from simulated radioactive material reduced and finally stopped water inflow (25).

An example of the magnitude of this depth effect on hydraulic conductivity in granite is given by the following equation (26):

$$K = 1.7\ D^{-3.95}$$

K = hydraulic conductivity, m/sec
D = depth, m

These researchers concluded that the decrease in hydraulic conductivity with depth seems to apply to both bulk rock and fractured rock. Although their equation is site specific, their results are consistent with experience in mines at the Coeur d'Alene Mining District, Idaho. Though deep, these mines are fairly dry, and the water that must be pumped to the surface is largely from draining hydraulic backfill.

It can be concluded that reduced water flow through cracks and joints from the effects of high in situ stresses as well as heat acting on these discontinuities tend to reduce Q and thus support requirements. However, the synergistic effects of these and other factors, e.g. dilation resulting from shear movement along cracks and joints, at repository depth, hence Q, are not well known and can only be estimated at this time.

4. The role of hydrothermal alteration of rock at cracks and joints is an additional complication that can significantly influence movement along these discontinuities. Hydrothermal reactions can occur at temperatures as low as 50° C (122° F). Investigators at Stripa concluded that the dominant mode of heat transfer in a discontinuous rock mass is conduction (27). However, some evidence of convective heat transfer at the Stripa site has also been reported (28).

Numerous studies of recently active volcanic and geothermal sites have demonstrated that heat from deep-seated magmatic bodies is primarily transported through fractures in overlying rocks by means of available vapor and hydrous phases. Similarly, substantial heat from radioactive waste could be dissipated by groundwater circulation. This thermal regime would encourage hydrothermal alteration along joint and fracture surfaces in the basalt, thereby weakening its structural integrity. Pressure solution experiments on fractured quartzite at 200° C (392° F) and 20 to 30 MPa (2,900 to 4,350 lbs/in^2) suggested that dissolution was enhanced at load carrying contacts (29). Therefore, the conclusion by DOE that creep and failure along joint surfaces will be prevented by

"basalt to basalt contacts" is highly suspect (EA, Vol. 2, p. 6-227). It should be noted that DOE expects alteration of basalt along joints and fractures to prevent escape of radionuclides into the surrounding environment which appears to contradict their above statement (EA, Vol. 2, p. 6-139).

Also, the conclusion by DOE that the interior of the reference basalt flow is "physically and chemically stable" (EA, Vol. 2, p. 6-138) does not follow from petrographic descriptions reporting 19 percent by volume of glass in the entablature and colonnade of the Cohassett Flow (30). Glass by definition is a metastable phase subject to devitrification and dissolution by hydrothermal fluids, with accompanying changes in volume and permeability. Fracturing in conjunction with devitrification, along with alteration of joint and fracture surfaces by hydrothermal fluids, may significantly lower the strength of the basalt.

How hydrothermal alteration would affect resistance to shear movement along joints and fractures as well as intact strength is difficult to predict. Hydrothermal reaction rates depend on fluid and rock compositions, flow rates of fluid through intact rock, cracks, and joints, as well as temperature. The possibility of dissolution of silicate and other minerals in high temperature environments followed by precipitation at lower temperatures, particularly along cracks and joints, should not be overlooked (31). More information is needed on reaction rates and reaction paths of hydrothermal reactions that are site specific for the repository, but these investigations are not an easy task. Reactions often proceed very slowly in geological environments, and metastable products are common. Therefore, laboratory investigations that involve only a few years are difficult to extrapolate to much longer time frames.

5. Dewatering of clay from heat generated by radioactive material has been suggested (32). Because cracks and joints in the basalt are filled with montmorillonite clay, the heat could cause loss of free water and possibly some combined water which in turn would shrink the clay thus possibly changing resistance to shear along these discontinuities. Also, circulation of dry air by the ventilation system during the construction and maintenance phases could produce a drying effect. However, the possibility of a drying effect can be considered only speculative at this time. There is no known experience in the mining industry of this drying effect; deep mines are sufficiently wet that there is very little if any drying of clay in cracks and joints.

6. All methods, including empirical and mathematical, that attempt to predict support requirements require an estimate of the effect of cracks and joints. These discontinuities can dominate in the failure of underground openings, and their characteristics and abundance are usually determined from field observations. However, the earth is a dynamic body, and tectonic forces, which are large at the Hanford site, can lead to continual development of new fractures. Furthermore, stress corrosion, also called static fatigue, can lead to formation and extension of cracks. The influence of these time dependent phenomena is difficult to predict, but they could cause significant fracture development.

7. The influence of the thermal load from radioactive material on Q and thus support requirements can only be a "crude" approximation at this time as acknowledged by Barton (4). This lack of precision in determining Q is largely a result of the preceding uncertainties.

Even after considering the above deficiencies, the support requirements using the Q system (and its empirical analogs) are the best estimates that can be obtained at this time given the lack of more precise knowledge of present underground conditions at the repository and conditions after emplacement of nuclear waste. More and better information is needed to refine support recommendations. Also, alternative methods such as better mathematical modeling than is now available would be helpful in confirming the results from Barton's empirical method as well as those proposed by others.

Scoping Calculations

The differential expansion between rock and supports when heated by nuclear waste was investigated. Assuming a support system that includes rock bolts, the differential expansion between the rock and rock bolts was calculated. The following equation gives the expansion difference between basalt and a rock bolt:

$$\Delta L = (CEB - CES) * L * (T_1 - T_2)$$

ΔL = Length difference
CEB = Coefficient of expansion of basalt
CES = Coefficient of expansion of steel
L = Length of rock bolt
T_1 = Final temperature of basalt and bolt
T_2 = Original temperature of basalt and bolt

Substitute the following values:

CEB = 3.43 micro in/in F
CES = 7.01 micro in/in F
L = 108 in
T_1 = 125 F (in situ basalt temp.)
T_2 = 392 F (maximum allowable temp.)

The difference in expansion is about -0.1 in. The minus sign indicates compression in the bolt.

If the bolt remains at the original, in situ basalt temperature because it is cooled by some means such as the ventilation air and only the basalt expands, the differential expansion is again about 0.1 in. but the bolt will be in tension.

Consider a fully grouted rock bolt as recommended by Barton for the repository (4). The results of a pull test on this type of bolt are shown in Figure 3. When the bolt was loaded above about 22,000 pounds, the grout around it began to crack and debond from the bolt. However, it is important to note that this cracking and debonding did not result in failure of the

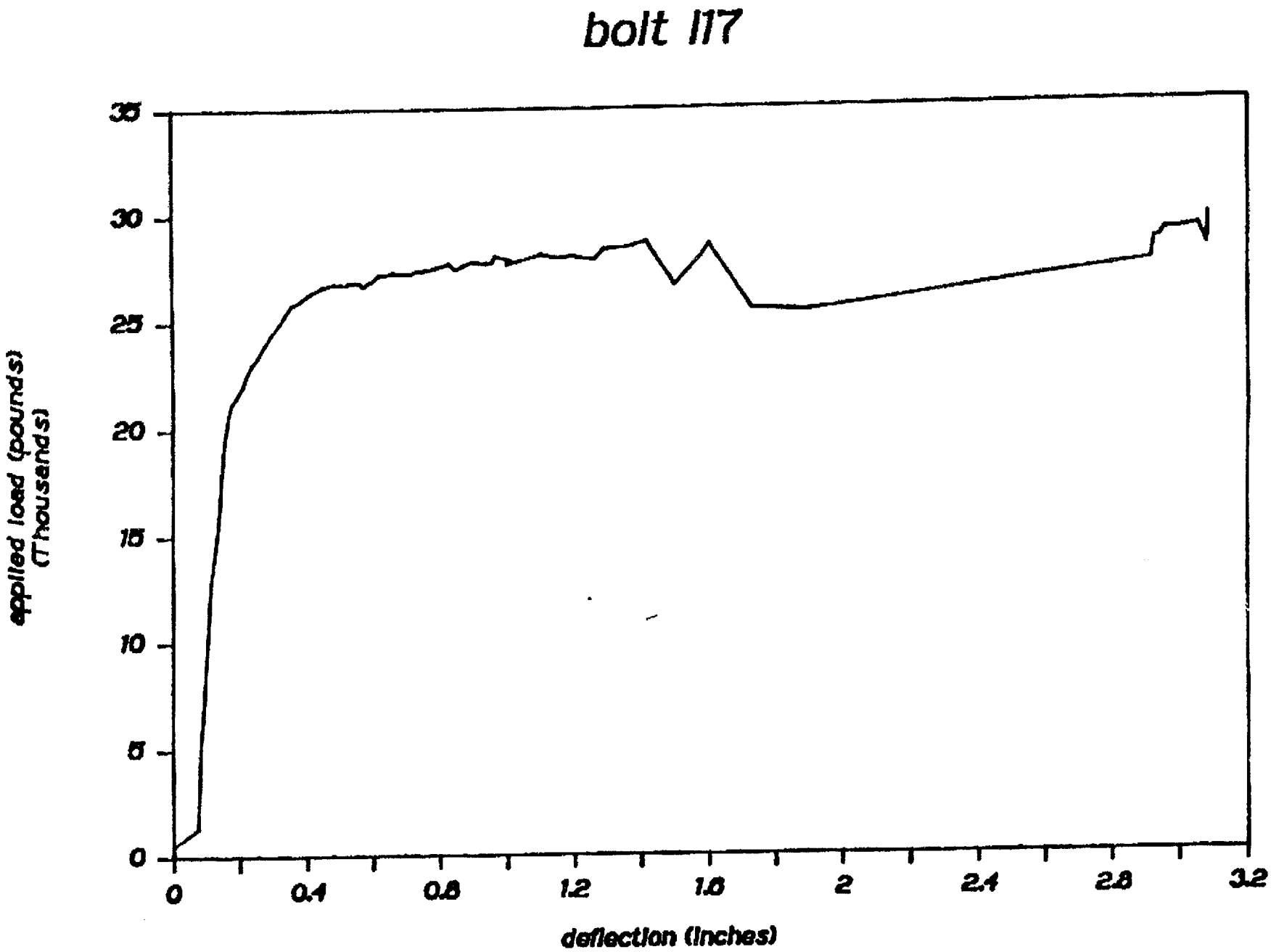

Figure 1.- Results of a pull test on a 3/4in. diameter, 4-ft long, fully grouted rock bolt.

bolt as a load carrying member because pull out resistance was maintained by mechanical interlocking of the grout with the bolt and drill hole. An applied load of about 26,000 pounds was maintained over a displacement of 3.1 inches. This load corresponds to a bolt stress of about 59,000 psi which is about 74 percent of its ultimate strength. By comparing differential thermal expansions on the order of 0.1 inch to the much larger displacements that can be accommodated by fully grouted rock bolts, it is concluded that displacements from differential thermal expansion are relatively insignificant.

Ranking of Support Systems

In view of the many uncertainties in the characteristics of the repository site, a meaningful ranking of the many different support systems according to their applicability is not possible. As mentioned previously, the support system recommended by Barton, which includes rock bolts and shotcrete, is probably the best choice that can be made at this time (4).

SUMMARY AND CONCLUSIONS

During the construction phase of the Hanford repository, the country rock temperature will be about 52° C (125° F). Existing technology will be adequate to manage support problems as mines are now operating successfully at higher rock temperatures and similar in situ stress conditions.

The expected life requirement of all support systems should be determined early in the design stage of the repository. The design of the primary support system is assumed here to require a life of about 100 years, i.e. the time necessary to emplace waste plus the required 50-year retrieval option. At the present time, experimental and empirical methods continue to play the dominant role in determining underground support requirements, although mathematical modeling plays a supporting though important role. The methodology is presently available for designing support systems for this time frame although a more complete data base is required.

There is no experience in supporting underground openings at the maximum rock temperature of 200° C (392° F) although it should be noted that most and possibly all of the supports will be at lower temperatures. However, some supports can be eliminated because one or more of their components are not suitable at these temperatures largely from strength or durability considerations. An example is supports constructed from wood. Also, resin grouted rock bolts now commonly used in mining and construction are unsuitable because the resins lose substantial strength at high temperatures. However, suitable resins might be developed through additional research. Point anchored rock bolts are also unlikely to be acceptable because a retorquing program is necessary to ensure that the bolts are tensioned to their design loads, and this may not be desirable or even possible in a repository. The same objection applies to roof trusses as they require periodic retensioning.

Two major classes of materials could be used for constructing supports primarily because of their acceptable performance at high temperatures. These are steel and concrete and includes supports such as fully grouted rock bolts with inorganic grout, cable bolts, steel arches and sets, concrete

liners, foam concrete, and shotcrete. Special compositions may be necessary for concrete and special alloys along with some means of corrosion protection may be required for steel. Other materials could also be used particularly with regard to superior corrosion and deterioration resistance, but their selection would require justification involving trade-offs of economy, performance, and safety. Testing in the actual or simulated repository environment to determine corrosion and deterioration characteristics is required for all support materials.

The EA for the Hanford site contains a proposed support system that includes rock bolts and shotcrete. This design is largely based on Barton's Q system which is an empirical method derived from case studies of successful support systems. It is probably the best design that can be accomplished to date. However, it must be emphasized that this design was largely determined from parameters that can only be considered estimates of conditions at the underground site. Clearly, better information on these parameters specific to Hanford is necessary before an accurate assessment can be made.

RESEARCH RECOMMENDATIONS

1. Corrosion and deterioration tests should be undertaken for all materials that will be used in constructing supports in an environment identical to that of the repository. Methods of corrosion protection should be investigated (see Appendix 2 for corrosion information directly related to the Hanford repository).

2. More research is necessary to establish the effects of hydrothermal alteration of basalt, especially the dissolution of asperities along joints and fractures and the dissolution of glass and minerals contained in the basalt. Both can result in significant weakening of the rock and thus affect support requirements.

3. All faults and other geologic discontinuities at or near the Hanford site should be located and mapped. Their potential for movement and release of seismic energy should be estimated. If release of significant seismic energy is a possibility, either from earthquakes or rock bursts, the support design will require consideration of dynamic loads in addition to static loads.

4. The amount of water flowing through cracks and joints at the repository horizon should be determined because this factor has a significant influence on support requirements.

5. Additional boreholes that penetrate the repository horizon would be useful to better determine the in situ stress field. These boreholes will also give additional information on the characteristics of the basalt at the candidate repository horizon. However, additional boreholes may not be advisable because they might become pathways for the escape of radioactive material.

6. Mathematical models should be revised or new models developed that include the effects of large numbers of cracks which are common to basalt, interaction of rock with supports, and dynamic loading in combination with static loading.

7. Thermomechanical investigations at Stripa and elsewhere have shown that in a discontinuous rock mass similar to that at Hanford the fractures and joints can absorb thermally induced rock deformations. Also, the various parameters used to calculate rock and support deformations and stresses are temperature dependent. Therefore, estimates of stresses in supports and surrounding rock that assume rigid models, rigid fractures, and temperature independence of the input parameters will not be representative of actual behavior. Therefore, calculations based on inadequate and incomplete information can be misleading and should be viewed with a high degree of caution. Much more information on the above factors that are site specific for the Hanford site is necessary before a support system can be designed with an acceptable degree of confidence.

8. The wealth of information that has been accumulated for the Stripa site has "demonstrated the vital importance of carrying out large-scale investigations in a field test facility" (27). These investigations, such as full-scale heater tests, have not been done for the Hanford site, but the many deficiencies in the presently available information on this site have been recognized by DOE and is the basis for their proposed site characterization project. A primary conclusion from this investigation is that a site characterization study for the Hanford site has substantial merit and is strongly recommended. The results will provide the much needed information and data base that is essential to design a satisfactory support system for the repository.

REFERENCES

1. U.S. Department of Energy. Environmental Assessment, Reference Repository Location, Hanford Site, Washington. DOE/RW/-0070. Three Volumes, 1986.

2. Hartman, H. L. Mine Ventilation and Air Conditioning. Wiley, 1982, 791 pp.

3. Short, B. Ventilation and Air Conditioning at the Magma Mine. Mining Engineering, Vol. 9, No. 3, 1957, pp. 344-348.

4. Barton, N. Rock Mass Quality and Support Recommendations for Basalt at the Candidate Repository Horizon, Based on the Q System. U.S. DOE SD-BWI-ER-012, 1986, 106 pp.

5. Kim, K., S. R. Dischler, J. R. Aggson, and M. P. Hardy. The State of In Situ Stresses Determined by Hydraulic Fracturing at the Hanford Site. U.S. DOE, RHO-BW-St-73P, 1986, 179 pp.

6. U.S. Department of Energy. Appraisal of Several Empirical Rock Mass Classification Systems for Estimating Tunnel Support Requirements in a Geologic High-Level Repository, DOE, SD-BWI-ER-011, 1985, 93 pp.

7. U.S. Department of Energy. Repository Design Development. DOE, SD-BWI-ES-018, 1984, 533 pp.

8. Gay, N. C., W. D. Orlepp, J. A. Ryder, O. Steffen, and H. Wagner. The Future of Rock Mechanics in South Africa. World Mining Equipment, 1984, Vol. 8, No. 1, pp. 36-39.

9. Karwoski, W. J., W. C. McLaughlin, and W. Blake. Rock Preconditioning to Prevent Rock Bursts - Report on a Field Demonstration. BuMines RI 8381, 1979, 45 pp.

10. Rockbursts and Seismicity in Mines. Discussion Session 3, Geology, Mining, and Seismicity. ed. N. C. Gay and E. H. Wainwright, South African Inst. Min. and Met., Symposium Series 6, pp. 161-162.

11. Hedley, D. C. F., and R. J. Weimiller. Rockbursts in Ontario Mines During 1984. Canada Centre for Mineral and Energy Technology, 1985, 37 pp.

12. Tabor, R. W. Changing Concepts of Geologic Structure and the Problem of Siting Nuclear Reactors: Examples from Washington State. Geology, Vol. 14, No. 9, 1986, pp. 738-742.

13. McGarr, A. Some Application of Seismic Source Mechanism Studies to Assessing Underground Hazard. In Rockbursts and Seismicity in Mines, The South African Institute of Mining and Metallurgy, Symposium Series No. 6, 1984, pp. 199-208.

14. Saito, T., K. Tsukada, E. Inami, H. Inoma, and Y. Ito. Study of Rockbursts at the Face of a Deep Tunnel, the Kanetsu Tunnel in Japan Being an Example. Fifth International Congress on Rock Mechanics. 1983, Vol. 2, pp. D 203 - D 206.

15. Broch E., and S. Sorheim. Experiences from the Planning, Construction and Supporting of a Road Tunnel Subjected to Heavy Rockbursting. Rock Mechanics and Rock Engineering. Vol. 17, 1984, pp. 15-35.

16. Chan, T., M. Hood, and M. Bord. Rock Properties and Their Effect on Thermally-Induced Displacements and Stresses. U. S. DOE No. LBL-10517, 1980, 20 pp.

17. Cook, N. G. W., and L. R. Meyer. Thermomechanical Studies in Granite at Stripa, Sweden. Sec. in Technology of High-Level Nuclear Waste Disposal, ed. by P. L. Hofmann and J. J. Breslin. DOE/TIC-4621, Vol. 1, 1981, pp. 87-99.

18. Richter, D., and G. Simmons. Thermal Expansion Behavior of Igneous Rocks. Int. Jour. Rock Mech. Min. Sci. and Geomech. Abstr., Vol. 11., 1974, pp. 403-411.

19. Witherspoon, P. A. Radioactive Waste Storage in Mined Caverns in Crystalline Rock - Results of Field Investigations at Stripa, Sweden. In a symposium, Perspectives in Geology, Urbana, IL, 1980, 61 pp.

20. Doe, T. W., W. A. Hustrulid, B. Leijon, K. Ingevald, L. Strindell, and H. Carlsson. Results and Conclusions of Stress Measurements at Stripa. Lawrence Berkeley Laboratory 15107, 1982, 16 pp.

21. Noorishad, J, C. F. Tsang, P. A. Witherspoon. Coupled Thermal-Hydraulic-Mechanical Phenomenon in Saturated Fractured porous Rocks: Numerical Approach. Journal of Geophysical Research. Vol. 89, No. B12, 1984, pp. 365-373.

22. White, D. E. Supplement to Heat, High Water and Rock Instability at Hanford. Health and Energy Institute, 1985, 29 pp.

23. Raven, K. G., and J. E. Gale. Water Flow in a Natural Rock Fracture as a Function of Stress and Sample Size. Int. Jour. Rock Mech. Min. Sci. and Geomech Abstr., Vol. 22, No. 4, 1985, pp. 251-261.

24. Barton, N., S. Brandis, and K. Bakhtar. Strength, Deformation and Conductivity of Rock Joints. Int. Jour. Rock Mech. and Geochem. Abstr., Vol. 22, No. 3, 1985, 121-140 pp.

25. Tsang, C. F., J. Noorishad, and J. S. Y. Yang. A Study of Coupled Thermomechanical, Thermohydrological and Hydromechanical Processes Associated with a Nuclear Waste Repository in a Fractured Rock Medium. Mat. Res. Soc. Symp. Proc., Vol. 15, 1983, pp. 515-522.

26. Barbreau, A., N. R. Brereton, P. Peaudecerf. A Study of the Characteristics of Very Deep Granite: Test in Underground Laboratories and Using Boreholes. In Radioactive Waste Management and Disposal, R. Simon ed., Cambridge Univ. Press, 1985, pp. 523-541.

27. Witherspoon, P. A., N. G. W. Cook, and J. E. Gale. Geologic Storage of Radioactive Waste: Field Studies in Sweden. Science, Vol. 211, No. 4485, 1981, pp. 894-900.

28. Cook, N. G. W., P. A. Witherspoon, E. L. Wilson, and L. R. Meyer. Progress with Thermomechanical Investigations at the Stripa Site. In Proceedings of the Workshop on Geological Disposal of Radioactive Waste, Stockholm, Sweden, 1982, pp. 19-31.

29. Johnson, B. Modification of Fracture Surfaces by Dissolution. 24th U.S. Symposium on Rock Mechanics, 1983, pp. 533-545.

30. U.S. Department of Energy. Repository Horizon Identification Report. DOE SD-BWI-TY-001, 1983, 508 pp.

31. Summers, R., K. Winkler, and J. Byerlee. Permeability Changes During the Flow of Water Through Westerly Granite at Temperatures of 100°-400° C. Journal of Geophysical Research, Vol. 83, No. B1, 1978, pp. 339-344.

32. Bird, G. W., and W. S. Fyfe. The Nuclear Waste Disposal Problem - An Overview from a Geological and Geochemical Perspective. Chemical Geology, Vol. 36, 1982, pp. 1-13.

APPENDIX 1

STATE-OF-THE-ART AND PHYSICAL PROPERTIES OF ROCK SUPPORT SYSTEMS

TABLE OF CONTENTS

Page

History of Rock Bolting 1

Principles of Rock Bolting 4

Rock Bolting Background 7

Rock Bolt Systems 8
- Tensioned 9
  - Slot-and-Wedge Bolt 10
  - Mechanical Anchor Bolt 11
  - Grouted Bolts 12
  - Grout Anchored Bolt 14
  - Mechanically Anchored and Grouted Bolt 14
- Untensioned 15
  - Fully Grouted Bolts 15
  - Cable Bolt 17
- Friction Stabilizer Bolt 23
  - Split Set[R] Bolt 23
  - Elliptical Bolt 24
  - Inflatable Swellex[R] Bolt 24
  - Full Length Mechanically Anchored Bolt 26
- Yielding Bolts 27
  - Conway Bolt 27
  - Ortlepp Bolt 27
  - Helical Bolt 28
  - Meypo-Head Bolt 29
- Secondary Support with Rock Bolts 30
  - Bearing Plates 30
  - Header Plates and Boards 31
  - Washers 31
  - Roof Ties, Steel Straps, Mesh Pans and Mesh 33

Other Support Systems 34
- Roof Trusses 34
- Rigid Steel Arches 38
- Yieldable Steel Arches 39
- Posts and Timber Sets 41
- Roof Jacks 41
- Tunnel Liners 42
- Cribs 42
- Steel-Fiber Reinforced Concrete Blocks 43
- Concrete 44
- Gunite and Shotcrete 46
- Grouting 48
- Roof Stabilization by Resin Injection 49
- Backfill 49

Page

Thermal Properties of Support Materials 51
Steel 51
Concrete 53
Inorganic Grout 55
Organic Grout 56
Bond Strength 57

State-of-the-Art and Current Research of Rock Support Methods 59
Mechanical Anchors 59
Tension 60
Thrust 61
Anchorage Tests 61
Bolt Grout Systems 63
Yielding Bolts 66
Computer Models 68

References 69

Selected Illustrations 73
Slot-and-Wedge Point Anchor Bolt Set 76
Mechanically Anchored, Tensioned Bolt Set 79
Cable Bolt Set 82
Grout Anchored, Tensioned Bolt Set 85
Mechanically Anchored, Tensioned and Grouted Bolt Set 88
Fully Grouted, Untensioned Bolt Set 91
Split-Set[R] Bolt and Elliptical Bolt Sets 94
Full Length Mechanically Anchored Bolt Set 97
Inflatable Swellex[R] Bolt Set 100
Helical Bolt Set 103
Bureau of Mines-Conway Yielding Bolt Set 106
Meypo-Head Yielding Bolt Set 109

LIST OF FIGURES

Page

Figure 1 - Beam Building 5
Figure 2 - Suspension 6
Figure 3 - Keying 6
Figure 4 - Tensioned bolts creating compression zone 9
Figure 5 - Slot-and-wedge bolt 10
Figure 6 - Mechanical anchor bolt 11
Figure 7 - Rebar bolt with resin package 16
Figure 8 - Fiberglass bolt 17
Figure 9 - Typical Cable Bolt Installation 18
Figure 10 - Load vs. displacement for cable bolts 21
Figure 11 - "Split set[R]" bolt 24
Figure 12 - "Swellex[R]" bolt 25
Figure 13 - Cross section of "Swellex[R]" bolt 26
Figure 14 - Helical bolt 28
Figure 15 - "Meypo-Head" yieldable bolt 29
Figure 16 - Dished bearing plate 30
Figure 17 - Doughnut bearing plate 31
Figure 18 - Bevel washer 32
Figure 19 - Spherical washer 33
Figure 20 - Typical roof truss 34
Figure 21 - Force diagram of roof truss 36
Figure 22 - Vertical reaction curves for roof trusses 37
Figure 23 - Rigid Steel Arch 38
Figure 24(a) - Yieldable steel arch 39
Figure 24(b) - Yieldable steel ring 40
Figure 25 - Confined compressive stress vs. deformation for concrete with fiber additive 43
Figure 26 - Deformation characteristics of foam concrete 45
Figure 27 - Support system using rock bolts, wire mesh, and shotcrete 47
Figure 28 - Strength vs. temperature for various steels 52
Figure 29 - General yield strength for hot and cold worked steel vs. temperature 52
Figure 30 - Compressive strength of concrete vs. temperature 54
Figure 31 - Temperature vs. strength for polymer resin 56
Figure 32 - Mechanical Anchors-Standard, Left; Bail, right 59
Figure 33 - Idealized curve for a pull test on a mechanical anchor bolt 62
Figure 34 - Comparisons of measured and theoretical deflections from the roof bolt simulator 68

LIST OF TABLES

Table 1 - English to SI Units Conversion Table 75

HISTORY OF ROCK BOLTING

Suspension type roof supports were used in U.S. coal mines as early as 1905 (1). In 1936, a new system (2) of providing reinforcement to mine roofs with rock bolts was developed at the Leadwood lead mine, St. Joseph Lead Company, St. Francois County, Missouri. The mine roof at the Leadwood Mine was composed of massive dolomite and also thinly laminated layers, approximately one-inch thick, in a transition zone between the Bonne Terre dolomite and the underlying LaMotte sandstone. The presence of glauconite, hydrous iron, and potassium silicate, and also shale between the layers, caused the loss of cohesion and the layers subsequently acted as independent members. Much vertical jointing was also present.

Roof bolting was tried in these ground conditions to hold the uneconomic roof rock in place while maintaining an unobstructed roof span of 25 feet required by the full swing mechanical loading machines. Stoper drills were used to drill 6 to 10 ft long holes into the flat mine roof. The concept of a portion of rock in tension due to gravity loading and located beneath a theoretical arch line was understood at this time. The hole depths were subsequently designed to penetrate the arch line. Holes were spaced 4 ft apart within each row, and rows were spaced 5 to 10 feet apart. One-inch diameter steel bolts with a split end and wedge on one end and threads on the other end were inserted into the holes. A special thread protecting dolly was used while an air jackhammer hammered the bolt upward so the split in the end of the bolt was driven over the slender wedge which was restrained by the end of the hole. As the bolt was being driven over the wedge, the steel on either side was pushed sideways against the walls of the drill hole. This simple method provided a fast, reliable way of anchoring a steel bolt inside a borehole.

Four-inch wide structural steel channel iron straps, used as a continuous strap, were also part of the system. The channel iron with holes pre-cut on 4-ft centers was then placed over the threaded bolts. Nuts were applied to anchor the channel iron tightly against the mine roof. Clear spans of 25 feet could then be achieved to accommodate the full-swing mechanical loading machines in use at that time.

Other mining companies were also installing or experimenting with rock bolts and rock anchors during the same period of time. The Homestake Mining Company in South Dakota used steel pins grouted into holes to reinforce the hanging walls of shrinkage stopes during the 1920's. The Empire Zinc Company at Gilman, Colorado, used rock bolts to support the large openings which housed its underground mill constructed during the late 1920's. The Anaconda Mining Company of Butte, Montana, began making rock bolt installations in 1939. In that year, an exhaust air crosscut was rock bolted and shotcreted at the time it was driven. The crosscut was still being used to exhaust hot, humid air from the 3400 level of the Belmont Mine many years later. In 1942, rock bolting experiments were carried out at the Washington-Glebe Colliery in England, but were not entirely successful. In the Forchaman Colliery in South Wales, a 60-foot-long section of roadway roof was systematically rock bolted with slot and wedge bolts in 1944. The work was terminated because of a shortage of materials, but the installation was still in good condition in 1958 (3).

Several individuals contributed to the further acceptance of rock bolting as a means of support. Mr. Z. S. Beyl, Mining Engineer of Delft, Holland, wrote a series of articles in Colliery Engineering, 1945-1946, and proposed using an

expansion-bolt anchor (4). Mr. C. C. Conway, Chief Engineer for the Consolidated Coal Co., applied a variation of the St. Joe Lead Co. method in a coal mine near Staunton, IL (5). Mr. Edward M. Thomas, Bureau of Mines, furthered the adoption of systematic bolting by documenting the St. Joseph Lead Company method in Information Circular 7533, September, 1949.

Fifty mines were using rock bolts for roof support in 1949. In 1951, 500 mines were using rock bolts for roof support (6). Bolts were being used successfully during the late 1940's and early 1950's even though the theory of roof bolting was only partially understood. L. A. Panek, Bureau of Mines, in 1956, quantified the effects of increasing the coefficient of friction between bolted layers of rock in Report of Investigations No. 5155. American Standard Specifications for Roof Bolting Materials in Coal Mines, sponsored by the American Mining Congress and approved by the American Standards Association were submitted and approved in September 1956. These ASTM Standard Specifications were revised in 1983 and are currently referred to as ASTM F432-83.

Rock bolting grew rapidly through the 1950's and 1960's. In 1968, 912 U.S. coal mines used 55 million bolts and 69% of underground coal production was mined under bolted roof (7). Epoxy resin grout was developed in Europe during the 1960's. Prepackaged polyester resin was developed in 1972 in the United States. Friction rock stabilizers consisting mostly of deformable steel tubes entered the market in the mid-1970's. Approximately 125 million bolts per year were used in the American mining industry alone during the 1980's. A myriad of expansion anchors, bearing plates, roof trusses, cable anchors, and

combinations of tensioned, untensioned, grouted, ungrouted, partially grouted rebar, deformed bar, smooth bar, bolts and accessories are now on the market.

PRINCIPLES OF ROCK BOLTING

Bolting offers several advantages over the traditional passive types of supports. Bolts may provide either active or passive rock support functions. Bolting materials require handling and storage of less weight and volume of support material, provide an unobstructed area, provide improved ventilation due to fewer obstructions, reduce the cross-sectional area which must be excavated for ventilation, and require only minor maintenance is required after the bolts are installed.

Rock is considered to be either self-supporting with no supplemental supports, self-supporting with the addition of some type of internal reinforcement, or non-self-supporting. In the first case, bolts would not be necessary; in the second case, bolts would assist the rock structure in supporting itself; and in the third case, bolts would suspend failed rock from more competent rock located above. Four principles are involved when an underground opening is supported with rock bolts. The first is beam building, the second is column reinforcement, the third is suspension, and the fourth is keying.

Beam building occurs when several thin rock layers are bolted together to form a single thick rock layer (Figure 1). In column reinforcement, the bolting method is identical to that used for beam-building, i.e., thin, poorly bonded layers are laminated together. This principle of reinforcement resists a

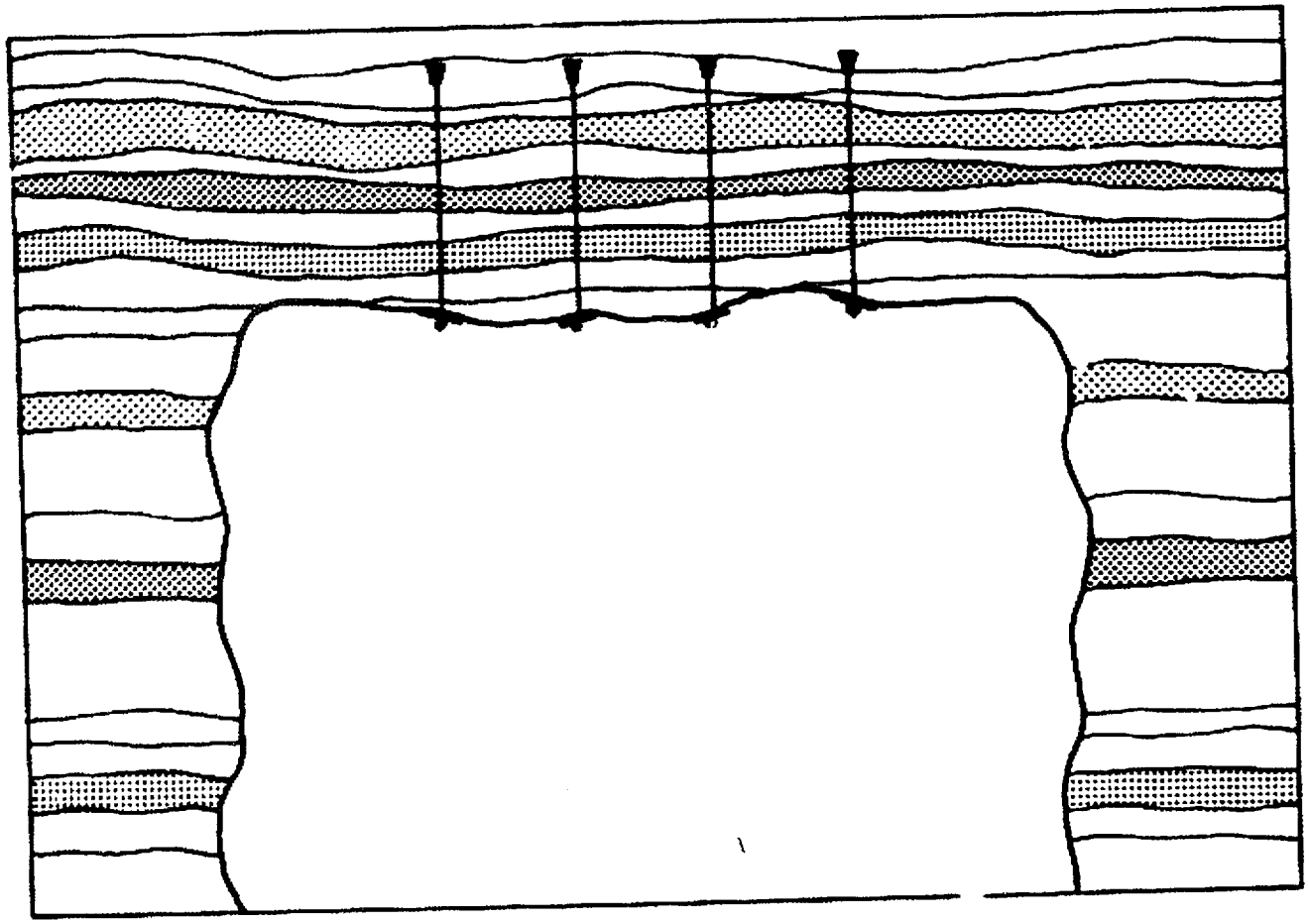

Figure 1. Beam building

buckling moment which is induced by high horizontal stresses. The bonded laminations react as a stiff horizontal column (8). Suspension occurs when a bolt passes through a separated layer of rock or piece of rock and the bolt anchor is located in a competent self-supporting layer or zone of rock above the separation (Figure 2). The steel bolt then "swings" the suspended material. Keying occurs when fractured or jointed massive or laminated rock is bolted together (Figure 3). The bolts pass through angular blocks of rock and also through the fractures between the blocks.

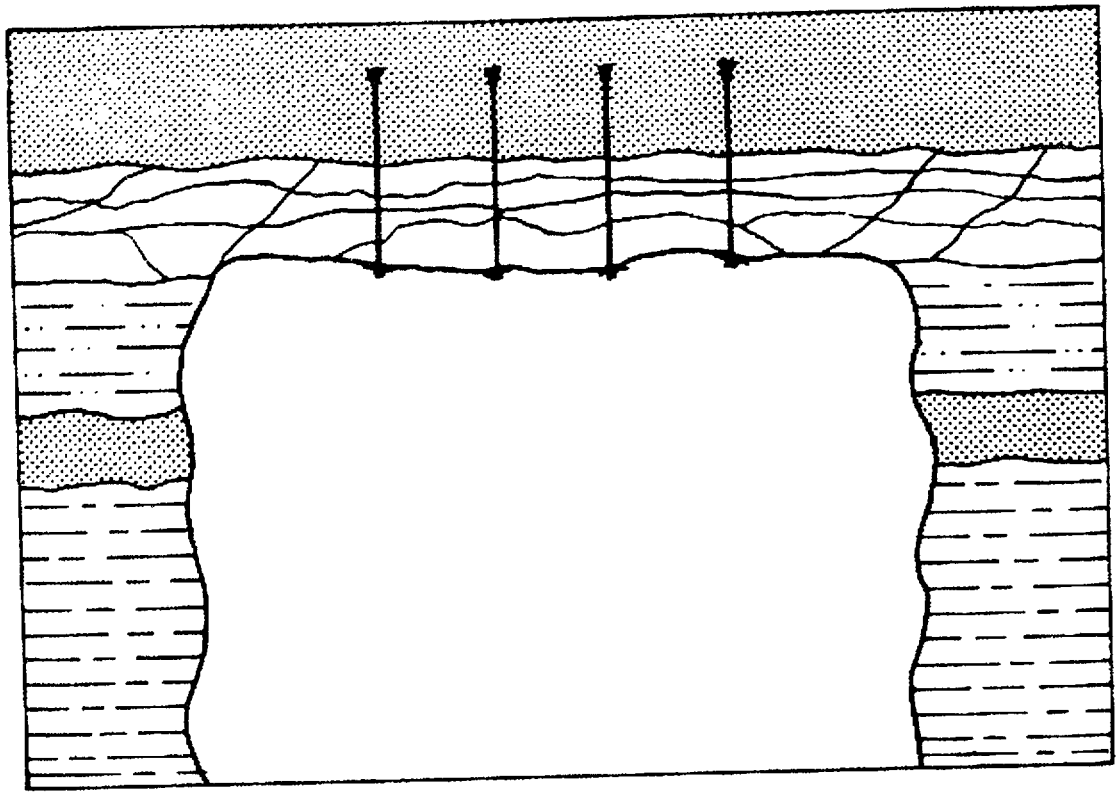

Figure 2. Suspension

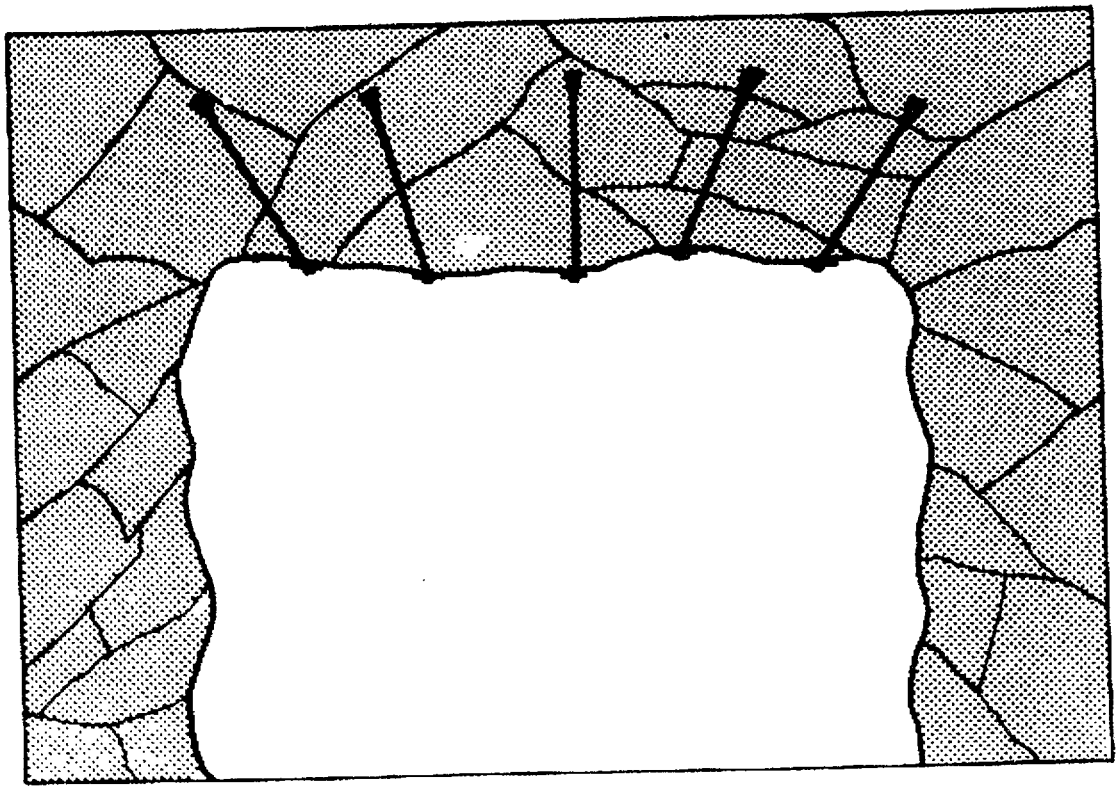

Figure 3. Keying

Practically speaking, all four principles of rock reaction to internal bolt reinforcement occur simultaneously. Many references exist on the theory of rock bolting and ground control. Chapter 13 of the SME Mining Engineering Handbook lists 262 references on ground control including many on bolting. The five volume contract report entitled "Design Criteria for Roof Bolting Plans Using Fully Resin-Grouted Nontensioned Bolts to Reinforce Bedded Mine Roof" by J. C. Gerdeen, V. W. Snyder, G. L. Viegelahn, and J. Parker, Department of Mechanical Engineering-Engineering Mechanics, Michigan Technological University, Houghton, Michigan, July 1977, is a thorough document and also contains numerous references on rock bolting for ground control.

ROCK BOLTING BACKGROUND

In the design of a roof control plan, consideration must be first given to the immediate roof. Beam, suspension, and keying support principles are considered over the opening, while pressure arch concepts are used in more removed areas. Immediately above the opening, a relieved zone of rock exists caused by bedding separation, resulting in roof sag. The higher overlying rock contains the pressure arch, which transfers the overburden load to the pillars. As a result of these actions, pillars must be designed to carry the loads, and thus maintain a stable opening (9).

Of necessity a large number of support types have come into being. Economic conditions and ease of installation of roof support systems are responsible for the creation of several technological breakthroughs. Special applications for problem roof conditions have created the need for other support methods.

The roof support of an underground opening is basically achieved through the application of two methods, roof bolts and compression units, such as timber or arches. One or both methods may be used to reinforce rock in the opening, and secondary support may also be utilized. Rock reinforcement systems may be active or passive at the time of installation. An active system imparts a load to the rock mass immediately upon installation, while a passive system places no load on the rock, and does not support the rock mass until the mass moves, thus loading the system (10). Compression units, such as timbers and arches, are normally passive, while roof bolts may be active, passive or a combination of the two.

In the application of conventional (mechanically anchored) rock bolts and conventional compression units such as timbers, conceptual differences exist. Successful tensioned rock bolting relies on the ability to make the ground self-supporting through consolidation; conventional compression units rely on the assumption that failure of the ground is inevitable, and the rock is supported after the rock has ceased to be self-supporting (11).

ROCK BOLT SYSTEMS

Rock bolt support systems are those internal to the rock structure and accomplish their purpose by load sharing and confinement functions. This type of support system includes all types of steel rock bolts typically used in mining and civil applications such as mechanical anchor, resin grouted, cement grouted, and friction stabilizer. Wooden rock bolts or dowels, once widely used in mining, will not be considered here because of their obvious temperature, strength, and life limitations.

There are two basic types of rock bolts, those that are pretensioned (active) and those that are not (passive).

Tensioned

The most common type of bolt is the mechanically anchored tensioned bolt. The tensioned rock bolt can be described as a bolt having one end anchored in the rock through a device which holds the bolt in place, usually by either part of the anchor or part of the bolt expanding outward toward the rock, thus anchoring the bolt to the rock. The other end of the bolt holds a plate to the rock face and tension is created through torquing the bolt head causing the bolt to pull inward, creating tension between the anchor and bolt head. This tension tends to compress the strata, thus creating a zone of competent rock (Figure 4).

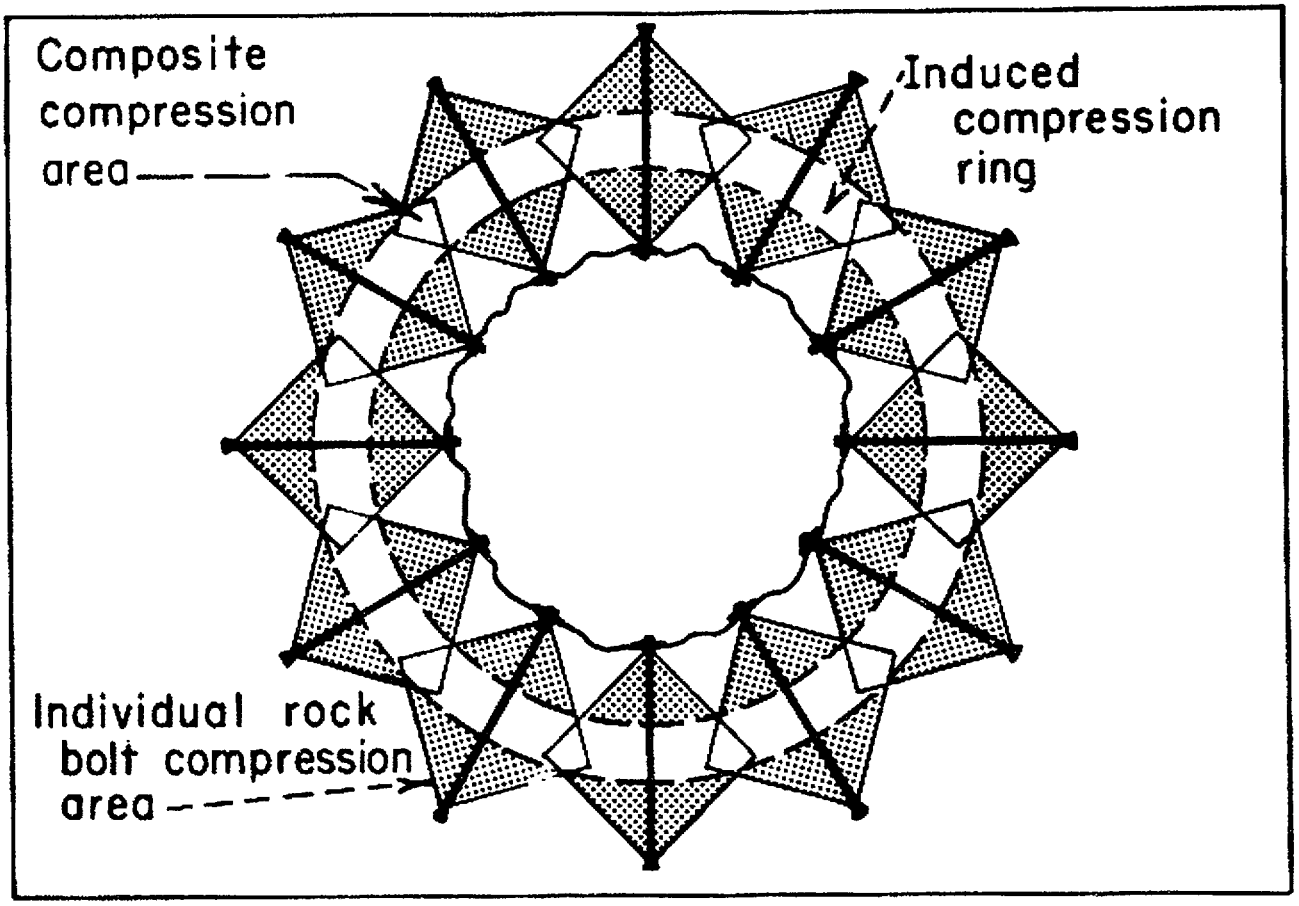

Figure 4. Tensioned bolts creating compression zone

Slot-and-Wedge Bolt

Within the tensioned rock bolt category the first type of bolt is the slot and wedge (Figure 5). This type relies on a bolt, slotted at the distal end, into which a wedge is placed. As the bolt is pushed into the top of the hole, the wedge is pushed into the slot, which in turn applies pressure to the sides of the drill hole. Tension is then applied to the bolt by torquing the nut at the proximal end, and in effect stretching the bolt, to apply a compressional force to the rock unit. Slot and wedge bolts are usually 1 inch in diameter and placed on 4-foot centers.

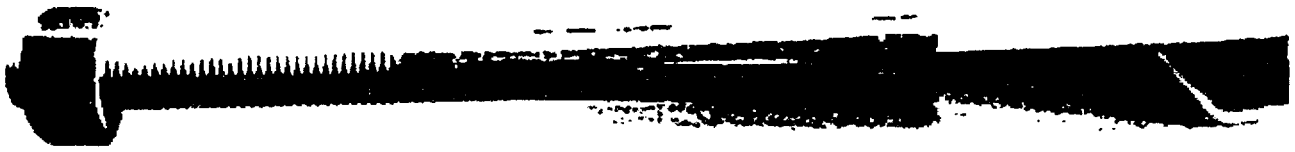

Figure 5. Slot-and-wedge bolt, short sample bolt

Mechanical Anchor Bolt

An improvement of the slot and wedge bolt is the mechanical anchor bolt (Figure 6). Prior to installation, one end of the bolt is screwed into the plug portion of the mechanical anchor. The bolt is placed to the back of the hole and rotated. This rotation causes the plug to be pulled forward into the slotted portion (leaves) of the anchor. The leaves then apply pressure to the walls of the drill hole which anchors the end of the bolt. Tension is then developed in the bolt with the application of further rotation drawing the bearing plate against the rock.

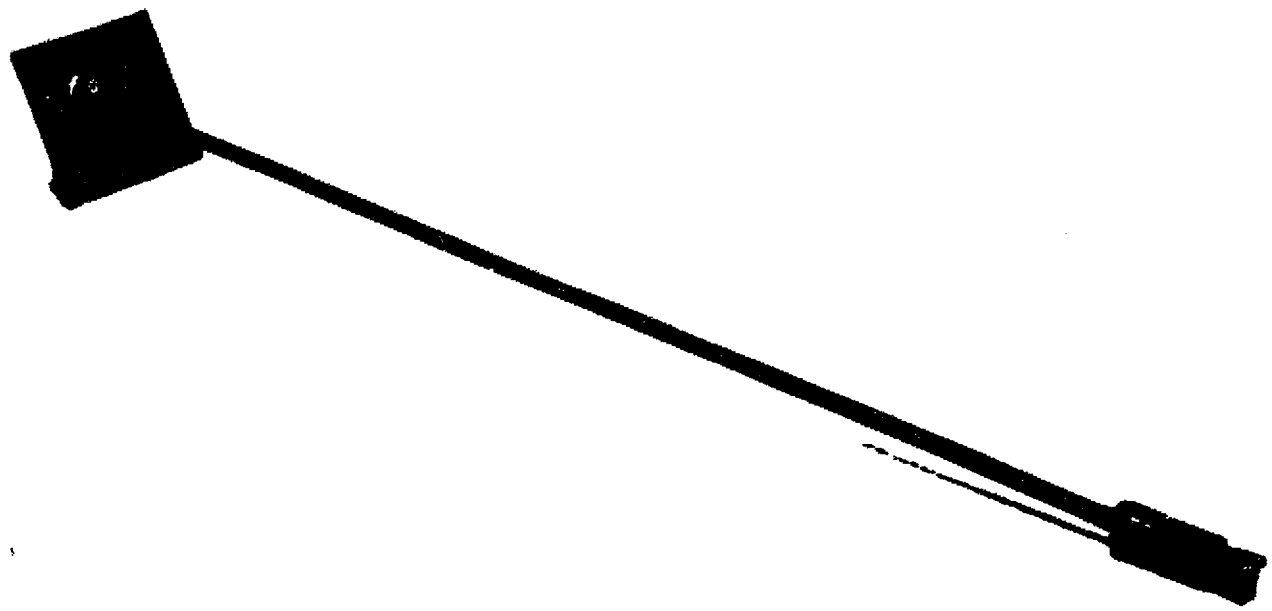

Figure 6. Mechanical anchor bolt

Grouted Bolts

In some types of ground, the dominant bolt loading force may have a large shear component. In this case, a bolting system is needed which will bear against the perimeter of the hole along the entire length of the hole. This was one reason for which the grouted bolt was developed. For grouted bolts, the grouting material may be either a cement or a resin. Grouted bolts are installed either by placing the bolt in the hole and injecting the grout, or emplacing the grout and then driving or spinning the bolt in (12).

A wide variety of grouting agents have been used with some success. Polyester resin is a thermosetting, viscous liquid containing a promoter that solidifies by a cross-linking polymerization when mixed with the heat generating catalyst. Curing begins with an initial gel stage, then curing to a solid mass when polymerization is caused by heat. The ultimate strength is reached logarithmically, very rapidly at first, then more slowly (13). The resin is packaged in a flexible plastic tube, the resin and catalyst components being separated by a layer of plastic. Tubes are available in a variety of length, diameter, and gel time. For this method, the required number of resin tubes are placed in the hole and the bolt is pushed and spun through the resin mixing its two components. A short time, less than 1 minute, is required to let the resin gel.

Injectable resin was developed so that a bulk resin, rather than prepackaged resin, could be used. This resin can be pumped, but is generally installed with a transfer tube and plunger. The main advantage of this system is its

lower cost. The mess created by the injection process and the additional time of installation are the main drawbacks (14).

A number of inorganic cements have also been used as grouting agents. These cements are either injected into the hole or inserted into the hole in cartridge form. For the latter method, the cement (either Portland or aluminate cement) is wrapped in a cartridge of porous paper. Prior to its use, the cartridge is placed in water for a specified length of time to allow water to enter the cartridge.

A new type of grout, known as gypsum grout, has been tested and found to be quite effective. The grout is composed of plaster of paris and a small amount of potassium sulfate as a curing accelerator. When mixed with water, this mixture hardens into gypsum. There are two methods for using this grout; one is injection, the other is in cartridge form. The cartridge form contains the cement and small water droplets encapsulated by a thin layer of wax. The components are packaged in a plastic sheath. This grout was found to pass ASTM standards and a long-term creep test indicated that with a constant load of 15,500 lb, a displacement of only 1/2 in would occur after 10 years. The overall performance of this grout was found to be better when used as an injected slurry (15).

Tensioned resin grouted bolts may be either partially or fully grouted. A partial, or point anchor, grouted bolt may be tensioned between the anchor point and bearing plate. A fully grouted tensioned bolt is a bolt which is entirely encapsulated by resin.

The use of quick-setting and slow-setting resin simultaneously in the same hole allows for a fully-grouted bolt to be tensioned. Curing the fast setting resin, first, at the top of the hole, allows the bolt to be tensioned prior to the curing of the slow-setting resin. The use of this type of bolt allows for the entire length of the drill hole walls and also the bolt to be fully covered with resin (16).

Grout Anchored Bolt

A point anchor resin rock bolt is a rock bolt which is anchored at the upper end by quick-setting resin or cement grout. The remainder of the bolt is tensioned, much the same as a mechanical anchor bolt. While rock is subjected to deterioration around a mechanical anchor, a short column of grout may protect rock around the anchor from air and moisture, and thus slow the deterioration process of the rock. Grouted point anchor bolts provide a strong anchorage in a variety of strata. This is particularly important when an anchor zone is close to a bedding plane between two strata. A reliable and long-term roof support is offered due to tension applied to the bolt. Tension will be maintained and anchor creep or slip is minimized. A zone of high compression is not created in the strata adjacent to the anchor (17).

Mechanically Anchored and Grouted Bolt

Some types of groutable bolts are manufactured with a hole manufactured through the center and along the entire long axis of the bolt. This hole allows for cement grout or resin to be pumped through the bolt and subsequently fill the annulus. These bolts are manufactured by the Williams Form Engineering Company. Williams Form^R bolts may be pre-stressed prior to

grouting. Expansion anchors are used for anchoring the distal end of the bolts prior to tensioning and grouting.

The bolts are pre-stressed by utilizing a hydraulic jack to apply the required tension. Numerous expansion type anchors specifically designed for this application are manufactured by this company.

Williams Wil-x-cement[R] grout is a portland cement blended with a calcium sulfo-aluminate cement.

Untensioned

Where a fully-grouted bolt is used, the bolt will remain effective along its entire length. A fully-grouted bolt acts quickly against both axial and lateral movements of the rock. Bolt effectiveness is not reduced to a high degree when roof slaking takes place near the bearing plate. The resin protects the roof bolt from corrosion and deterioration and cured resin is resistant to shock loads. Generally, it has been found that there is little difference between the performance of tensioned and untensioned fully-grouted bolts. Rock movements, even in very small magnitudes, will induce significant tensile loading in the bolt.

Fully Grouted Bolt

The most widely used grouted bolt is the full column, untensioned, headed, deformed bar, rebar, bolt, using a prepackaged polyester resin as the grouting agent (Figure 7). The fiberglass bolt (Figure 8) is a fairly new support

type, basically having the same advantages as the cable bolt. One type of fiberglass bolt is manufactured entirely of fiberglass, including threads, nut and plate. This development eliminates the corrosion drawbacks of a metallic bolt. Fiberglass bolts are typically high in tensile strength, completely cuttable, low in weight, and easy to handle, compared to steel. Fiberglass bolts are subjected to the same temperature limitations as organic resins because these resins are used to bind the fiberglass strands together.

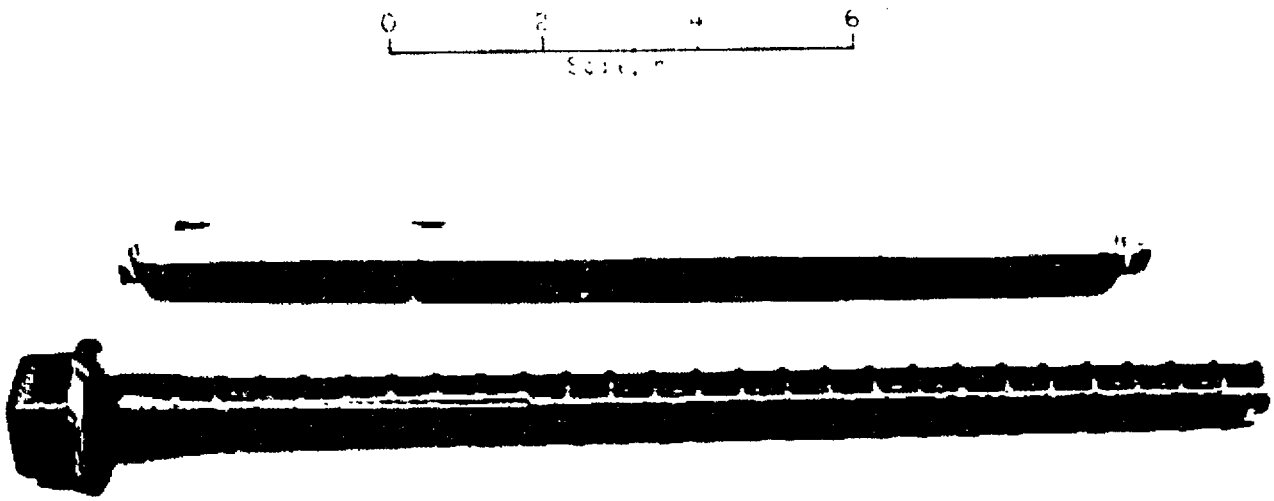

Figure 7. Rebar bolt with resin package

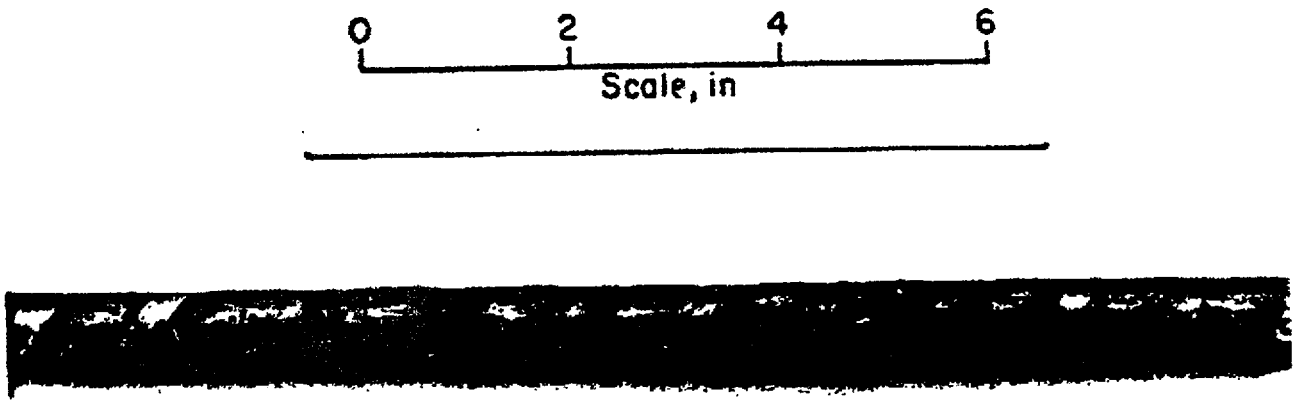

Figure 8. Fiberglass bolt

Cable Bolt

The cable bolt has gained some recognition due to the fact that the cable may be cut to any length, up to 100 ft, at the job site, and it may be wound on a spool, thus easing the operator's job, especially when long bolts are needed. Cable bolts are often used in conjunction with other bolting systems, providing reinforcement to the entire rock mass. Cable bolts consist of steel cables grouted into drill holes in rock as shown in Figure 9. The cables vary in length, but 60-ft lengths or greater are common. The cables are made from

seven high-strength steel wires of 0.6 to 0.625-in. diameter each with an ultimate tensile strength of approximately 58,000 lbf. The grout used for filling the holes is a mixture of water and cement at ratios ranging between 0.35:1 and 0.5:1.

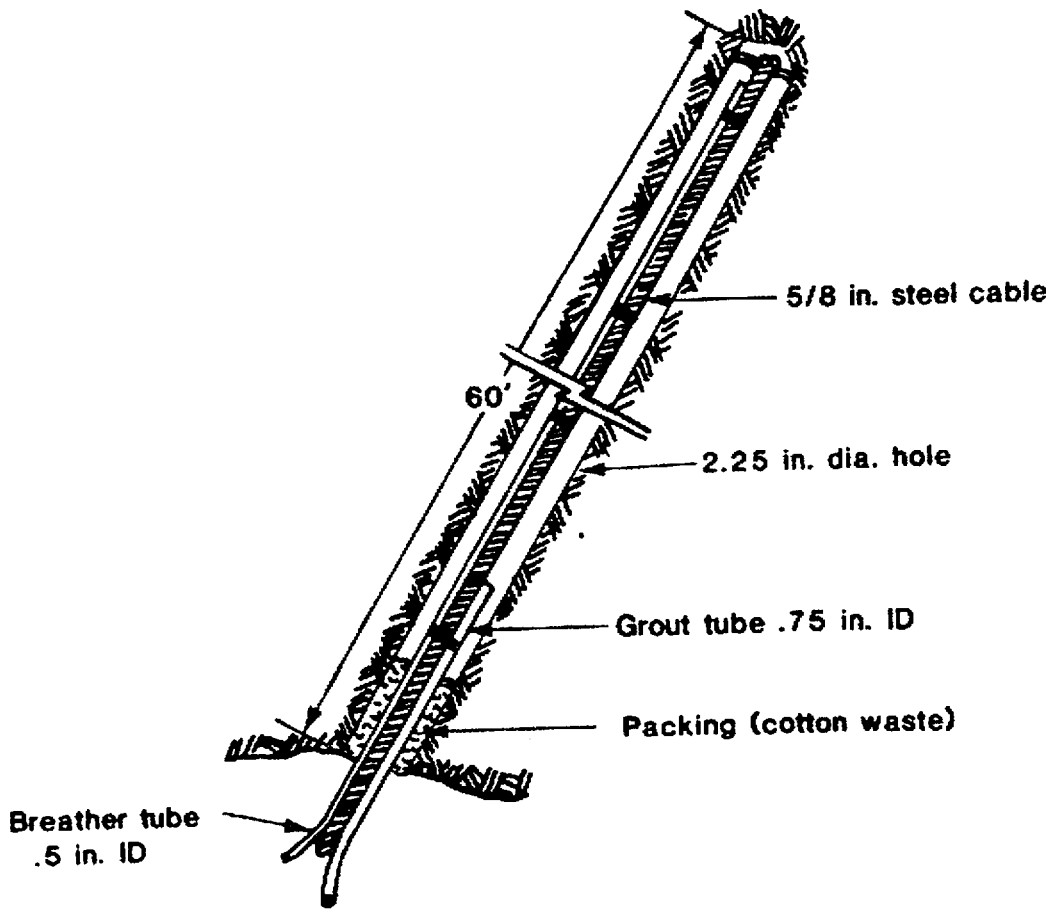

Figure 9. Typical cable bolt installation (50)

Cable bolts were first introduced about 1970 to the mining industry in Australia to reinforce ground before mining. They were later adopted by many mining companies throughout the world. In the United States, cable bolts were first used in 1977 by the Homestake Mining Company in Lead, South Dakota. At present, there are four mining operations in the U.S. which are either using or have used cable bolts. They are the Homestake Mine, Carr Fork Mine, Lucky Friday Mine, and the San Manual Mine.

Cable bolts can be installed at any angle and can consist of a single cable or a bundle. When installed in an up hole (at some angle above the horizontal), the cable(s) and breather tube are first inserted into the hole. Water is then forced through the breather tube to flush the hole. Next, the grout tube is pushed approximately 3 ft into the hole and the bottom 12 in. of the hole is plugged. The hole is then filled with grout through the grout tube. The breather tube allows air, which is displaced by the grout, to escape. When the hole is filled, the ends of the two tubes are folded over and tied off to prevent drainage of the grout. These tubes remain in the hole and are not recovered. A breather tube is not required in down holes. They are filled by inserting the grout tube to the bottom of the hole and then retrieving it while the hole is filling with grout.

The load-carrying capacity of this system depends on the failure strengths of the cable, grout, and interfaces between cable and grout and between rock and grout. Failure of the cable-grout interface usually occurs first, and has, consequently, been the subject of most laboratory research on cable bolts.

A primary advantage of cable bolts is that a long bolt can be installed in confined areas because the cable is flexible. For example, in an opening (drift) with a 10-ft-high roof, the length of rigid bolts is limited to 10 ft or less. However, because cables will bend, much longer cable bolts can be installed in the same opening. As mentioned previously, 60-ft-long cable bolts are common.

Cable bolts are especially applicable in fractured ground because the entire length of the cable is bonded to the rock with grout. At the San Manual Mine, where the mining method is block caving, the ground is highly fractured and the cables are installed by first anchoring the head end of the cable in the hole, applying a prestressing load of approximately 20,000 lbf, and then grouting the hole. This helps sandwich the rock mass into an integral unit and also keep the rock surface from spalling. Cable bolt support systems can be designed to respond to various amounts of ground movement. In highly stressed rock, single cables in each hole allow large rock deformations, thereby redistributing the load to pillars. Double cables, on the other hand, have higher load-carrying capacities with lower displacements, and therefore do not allow as much rock movement for a given load. Figure 10 shows that a cable bolt can accommodate substantial displacement without failure. Recently, three new friction-inducing modifications to cables have been introduced to the industry: 1) steel buttons which are pressed onto the cables, 2) coating the cable with epoxy and embedded grit, and 3) arranging the wires in a birdcage configuration.

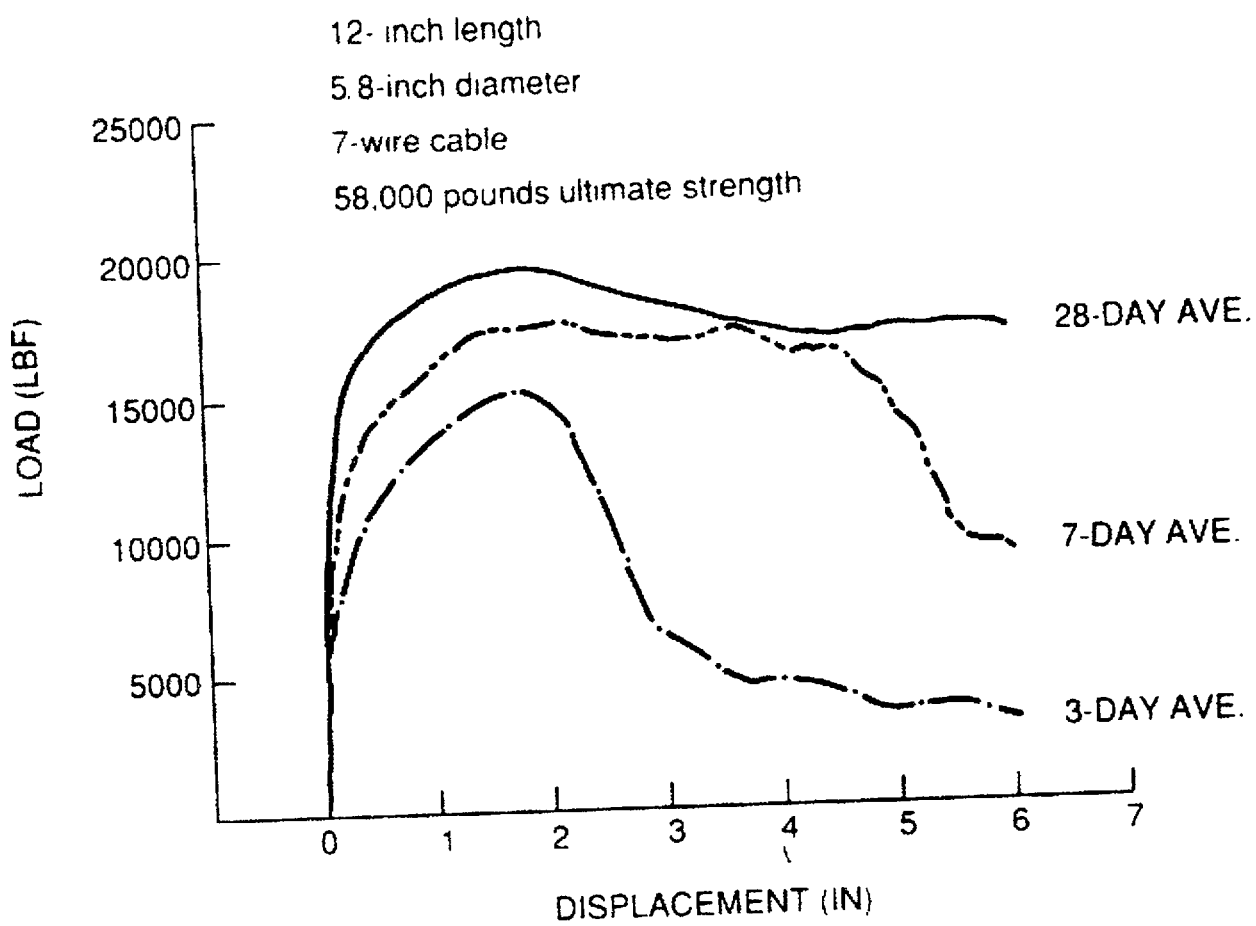

Figure 10. Load vs. displacement for cable bolts (50)

The steel button concept originated in Canada and is being used extensively there. The buttons are usually 1.00 to 1.25 in. in diameter by 1.5 to 1.75-in. long. They are pressed onto the cable at specified intervals (usually 2 to 3 feet) by a 350-ton capacity press. The purpose of a button is to transfer load from cable to grout by compressing the grout in front of the button rather than by shear at the cable-grout interface. Preliminary laboratory pull tests indicate that the maximum load carrying capacity of a

button-cable support is approximately three times that of a cable without buttons. A 1-ft section of embedded cable with a single button attached near the center will carry loads of approximately 58,000 lbf which is the breaking strength of the cable. The same 1-ft section of cable without a button will carry approximately 20,000 lbf. Location of the buttons is the key to their success, but the optimum location for each application is difficult to predict.

Epoxy coated cables were developed to provide corrosion protection for cables in prestressed concrete members. However, coated cables did not provide enough shear resistance against pullout, so the manufacturer embedded grit into the outer surface of the coating to provide this resistance. Laboratory pull tests indicate that the load-carrying capacity of a cable is increased by approximately 31 percent when coated with the epoxy and grit. In addition, many tests have been run on this cable for chemical resistance, abrasion resistance, and resistance to cracking from flexure. The coated cable has performed satisfactorily. The Federal Highway Administration approves their use on bridges exposed to corrosive environments.

The tight-fit configuration of the seven wires in a conventional 0.625-in. cable limits the surface area of the cable contacting the grout to approximately 2.62 in^2 per linear in. of cable. The limiting resistance to pull out is developed at this cable-grout interface. Recently, a manufacturer in Australia developed a technique for separating the seven wires of a conventional cable, rotating the outer six wires slightly, and then recombining the wires to form an open cable so that the surface area of all of the wires comes in contact with the grout. This is called a birdcage cable,

and it incorporates a series of nodes and anti-nodes with a period of approximately 7.0 in. Birdcaging can begin or end at any point along the length of the cable. Laboratory pull tests indicate the maximum load-carrying capacity of a birdcage cable is increased by approximately 104 percent over a conventional cable.

Reference made to specific brands is made to facilitate understanding and does not imply endorsement by the Bureau of Mines.

Friction Stabilizer Bolt

A new innovation is the friction stabilizer bolt. The basic approach is to use a steel tube which interferes with the bolt hole surface thereby creating sufficient friction to lock the bolt in place. This interference is accomplished by manufacturing the tube slightly oversize for the hole and forcing the bolt to contract slightly upon insertion or by preforming the tube undersize for the hole and expanding it with internal hydraulic pressure after insertion.

Split Set[R] Bolt

The "Split Set[R]" friction rock stabilizer (Figure 11) has a slot along its entire length. One end is tapered to allow insertion into the drill hole. The hole is drilled slightly smaller in diameter than the tube. During installation, the entire tube is compressed, closing the slot and exerting an outward force against the rock. Friction between the steel tube and the walls of the borehole helps stabilize the rock mass.

Figure 11. "Split Set^R" bolt, short sample bolt

The elliptical bolt, a steel tube with an elliptical cross section, also utilizes friction between the tube and walls of the borehole. The major axis of the ellipse forms to the shape of the drill hole, creating outward radial forces against the rock. As the bolt is pushed into a slightly undersized hole, the major axis is compressed, causing the minor axis to expand. When the bolt is fully inserted, an outward force is maintained against two opposing sides of the drill hole walls.

Inflatable Swellex^R Bolt

The "Swellex^R" bolt (Figure 12) is made of a steel tube, which has been reshaped to a smaller diameter. The ends of the tube are reinforced with

short, welded sleeves. When installing this bolt, high pressure, 4300 psi, water is pumped into the tube through a small hole, causing the tube to swell in the drillhole, filling it completely (Figure 13). Due to the high water pressure, the bolt will conform to any irregularities in the hole.

During the inflation process, the lower part of the bolt shortens, thus pressing the bearing plate firmly against the rock. Following installation, the water pressure is released and a small amount of water leaves the tube.

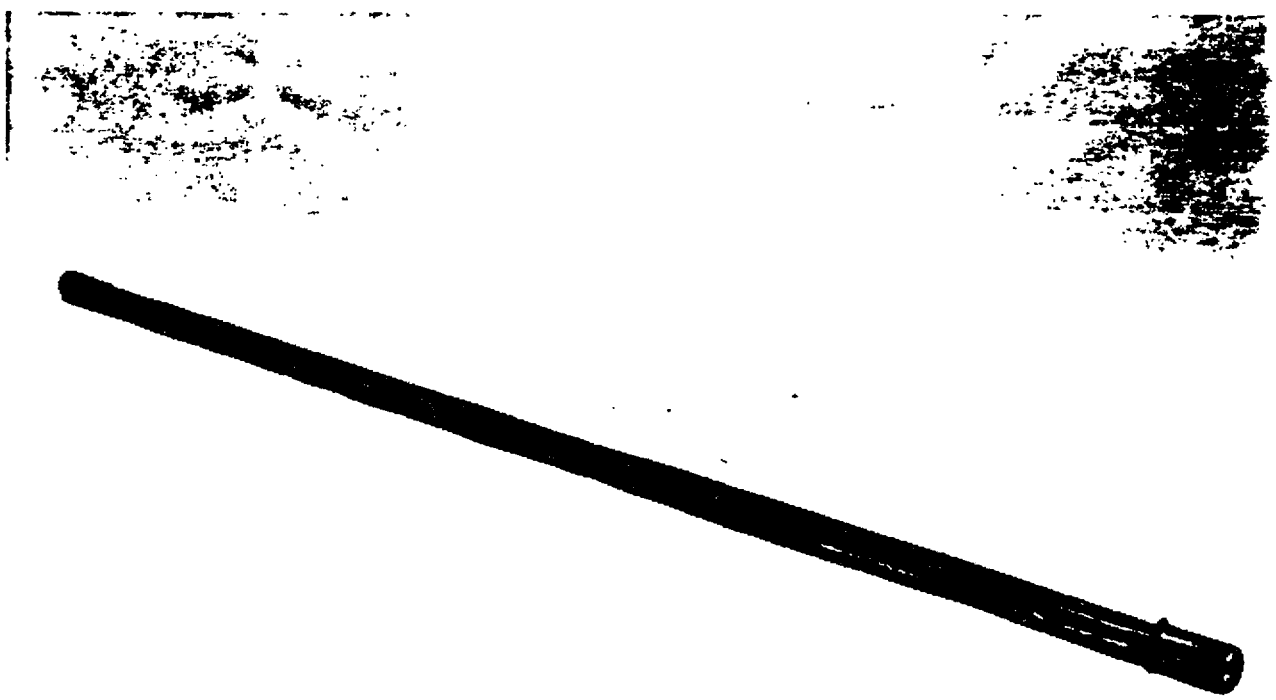

Figure 12. "Swellex^{R}" bolt

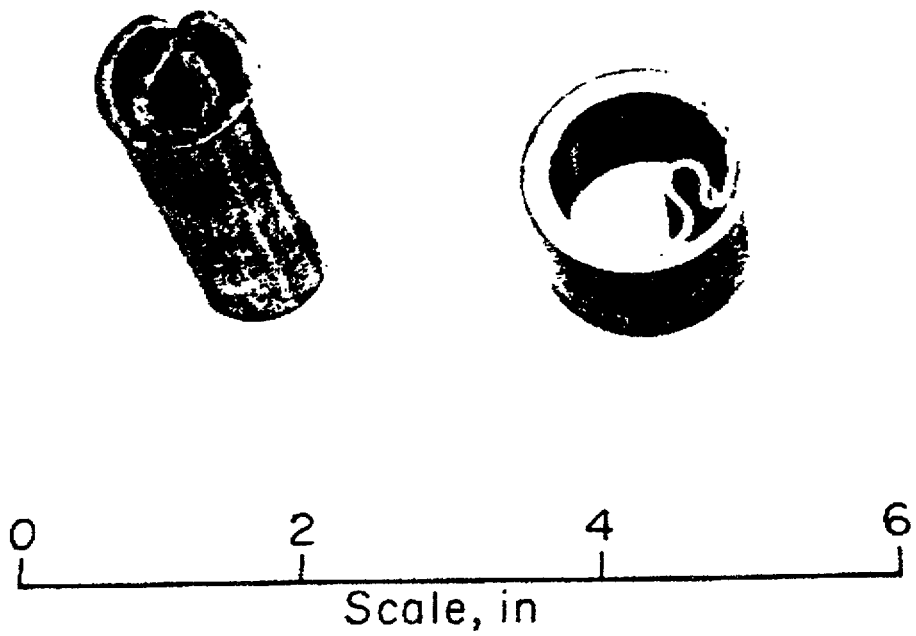

Figure 13. Cross-section of "Swellex" bolt:
Before expansion - left; After expansion - right (inside a brass sleeve)

Full Length Mechanically Anchored Bolt

The full length mechanical, or "Lateral Force System[R]," bolt uses steel which is corrugated on one side and a matching corrugated slide to create a positive force along the length of the hole. As the installation force is applied to the bolt, the two corrugated parts go out of mesh, exerting a lateral force to the drill hole wall along the entire length.

Yielding Bolts

Yielding rock bolts are used in heavy squeezing ground where the bolts must undergo substantial deformation while maintaining their structural integrity. They are also used in mines and tunnels susceptible to rock bursts because they can resist large dynamic loads without failure. Several designs have evolved, but none have been widely used commercially in the U.S. due mostly to their high cost.

While there are variations in these bolts, the yielding principal is generally the same, i.e. a part of the bolt is permanently deformed during yielding by drawing through a die.

Conway bolt

Conway bolt is an example of a yielding bolt (18). When the tensile force on the bolt exceeds a critical design value, a threaded rod is forced through a die. The threads are deformed as they pass through the die, and the load remains essentially constant with bolt elongation. In highly loaded rock where displacements are large, this load-deformation characteristic acts to retain the fractured rock while the surrounding intact rock undergoes stress redistribution or the opening is stress relieved.

Ortlepp Bolt

This yielding bolt also utilizes a smooth-bored die which deforms the raised thread of a rock bolt when the imposed load exceeds a critical value. The die

of this bolt is placed at the anchor end such that no excess length of bolt protrudes from the hole (19).

Helical Bolt

A flexible helical rock bolt (Figure 14), designed at the Bureau of Mines, can be used where a constant force must be maintained within the rock over a large range of deformation. The bolt, resembling a spring, has been tested and found to be sound in concept. Either a mechanical or grout anchor may be used. Further testing remains before this bolt is established as a reliable method of roof support (20).

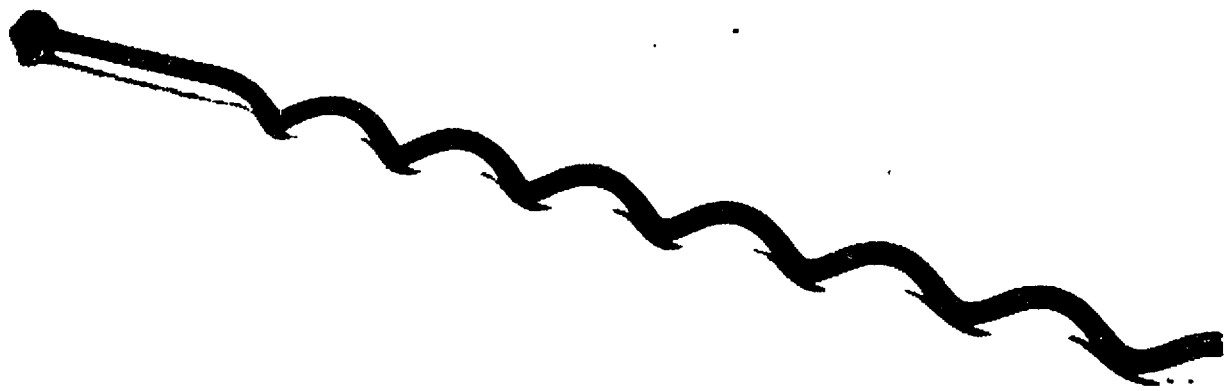

Figure 14. Helical bolt

Meypo-Head Bolt

A fourth type of yielding rock bolt, the "Meypo-Head," using an innovative design allowing for various extension loads, is now available (Figure 15). One end of the bolt is anchored, either mechanically or with grout in the end of the hole. The other end of the bolt protrudes from the hole and is fitted with a special anchor head. Excess amounts of the bolt may be bent back, allowing a greater length to yield. As the rock around the bolt moves, a number of hardened steel cylindrical bullets strip grooves in the rock bolt, thus maintaining a load on the bolt while allowing the effective length of the bolt to increase. Depending on the number, angle, and protuberation of bullets into the bolt, the desired extension load can be established.

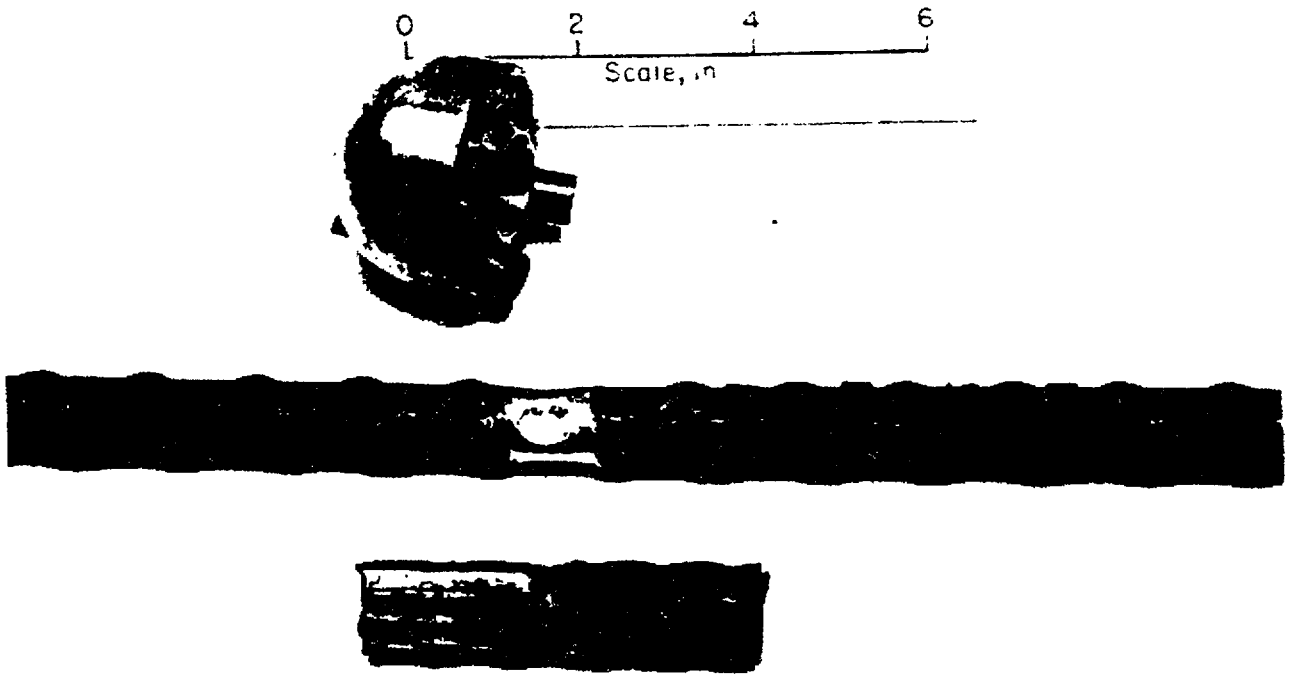

Figure 15. "Meypo-Head" yieldable bolt

Secondary Support with Rock bolts

Bearing Plates

For most bolts, some type of secondary support is necessary. Normally, a steel plate is affixed to the bolt such that the rock will bear on the plate, thus giving the term, bearing plate. Bearing plates come in various forms, depending on the performance characteristics required. The flat bearing plate is simply a square metal plate with a hole through the center, allowing the bolt to be passed through. A dished bearing plate, or bell embossed plate (Figure 16), has a convex downward shape, allowing resistance to deflection under a load.

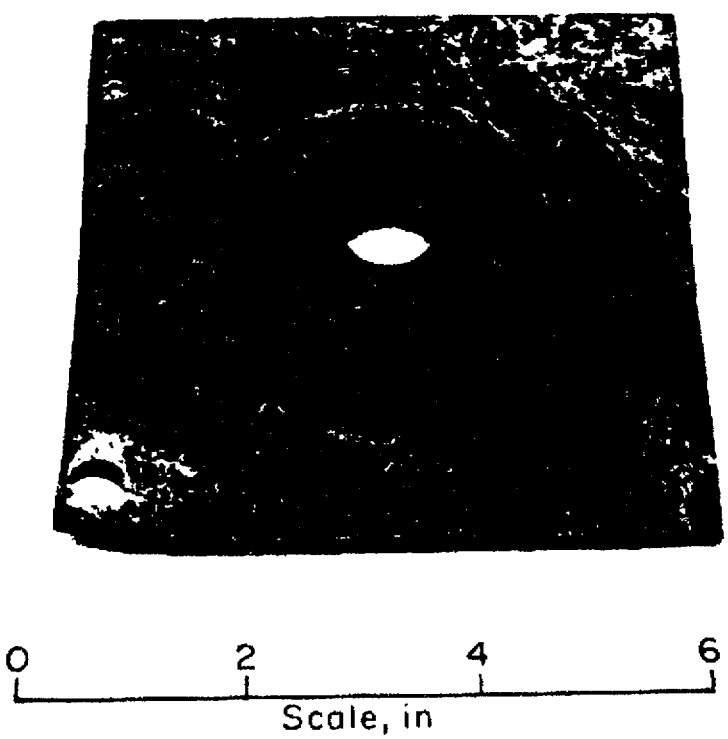

Figure 16. Dished "bell embossed" bearing plate

The donut bearing plate (Figure 17) is similar to the dished plate with the added feature of a partial recess in the center.

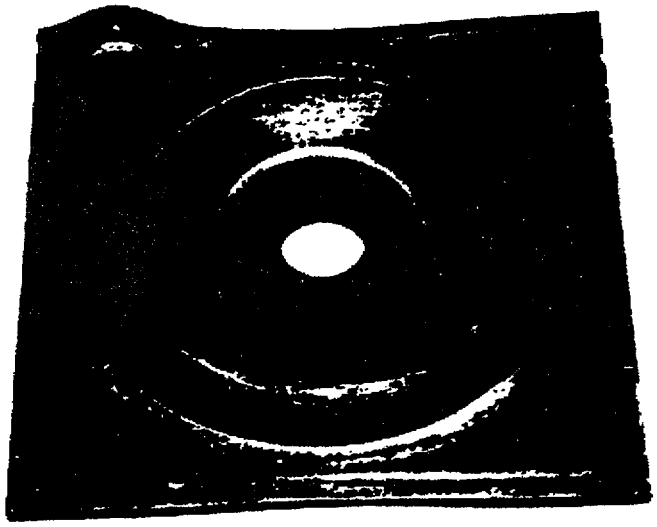

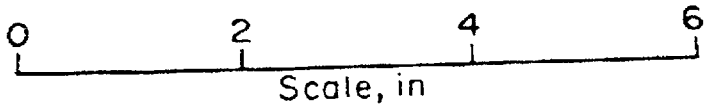

Figure 17. Doughnut bearing plate

Header Plates and Boards

A header plate is basically a long rectangular bearing plate, providing a wider distribution of bolt load. These plates are available in various geometries. Header boards are rectangular wooden planks, usually two inches thick, and used in conjunction with a bearing plate. Header boards allow the bolt to take greater movement of rock by letting the bolt crush the board.

Washers

Hardened washers are used with roof bolts which require torquing to introduce load in the bolts. As the bolts are tightened, the hardened washer reduces

the friction between the bolt head and bearing surface. Standard washers are round or square and usually tempered for hardness. Bevel washers (Figure 18) have a small slope and are used where the rock surface is not at a right angle to the bolt axis. Spherical washers (Figure 19) are used when a greater angle exists between the rock strata and bolt axis. The spherical face can accommodate a wide range of angles by creating a ball and socket type joint.

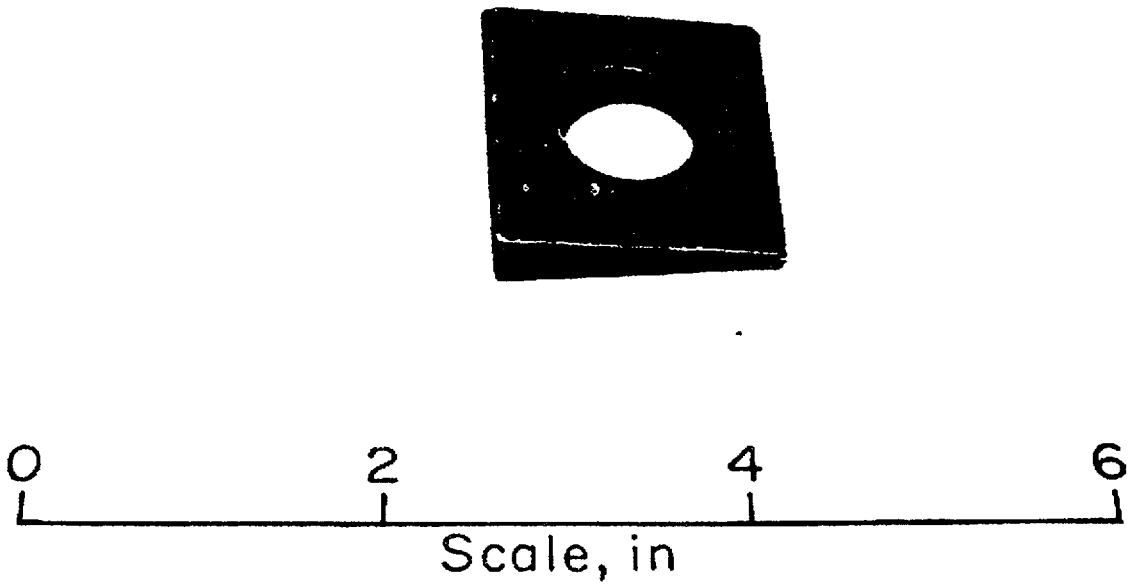

Figure 18. Bevel washer

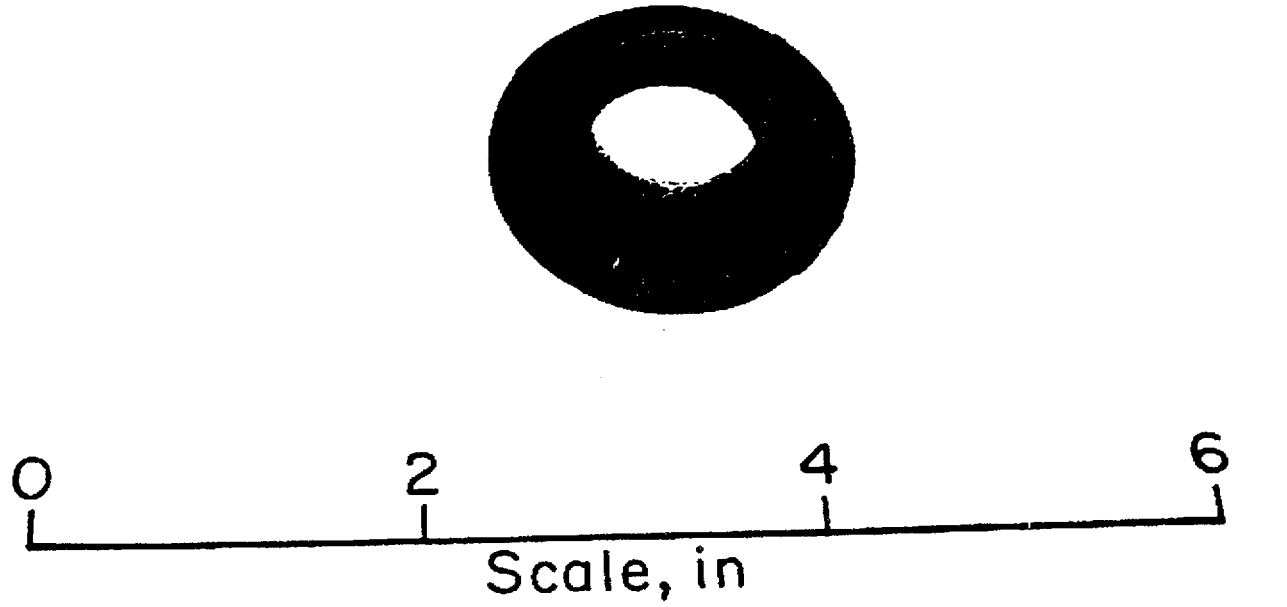

Figure 19. Spherical washer

Roof Ties, Steel Straps, Mesh Pans and Mesh

Ties, straps, and mesh pans are used to join several bolts into a continuous support. Spalling and sloughing of the roof is held to a minimum by these units. Steel straps are flat strips of metal which can be used on flat or extremely uneven roofs. The steel straps are not as rigid as a roof tie, so it can be bent to conform to uneven surfaces. Likewise, expanded wire mesh can be formed to uneven surfaces. The mesh is made of thick steel wire welded in a grid pattern. Steel ties are stamped metal straps, having curved or angled edges to make the unit more rigid. Chain link mesh reinforcement, can be used for control where spalling and sloughing are too great of a hazard to use the other alternatives.

Roof Trusses

Roof trusses are used in mining to reinforce and confine a roof which is weak or badly fractured. The roof truss applied to underground support is derived from a technique for strengthening beams used for civil construction. A cable fastened at each end of the beam is tensioned below the beams lower chord to increase it's load carrying capacity. The cable is held out from the beam by either one centered vertical member perpendicular to the beam (king's truss) or by two spacer blocks positioned some distance in from either end (queen's truss). The roof truss was developed because it was thought that a mine roof behaves somewhat like a beam. The queen's truss is the most common because it preserves headroom in the entry.

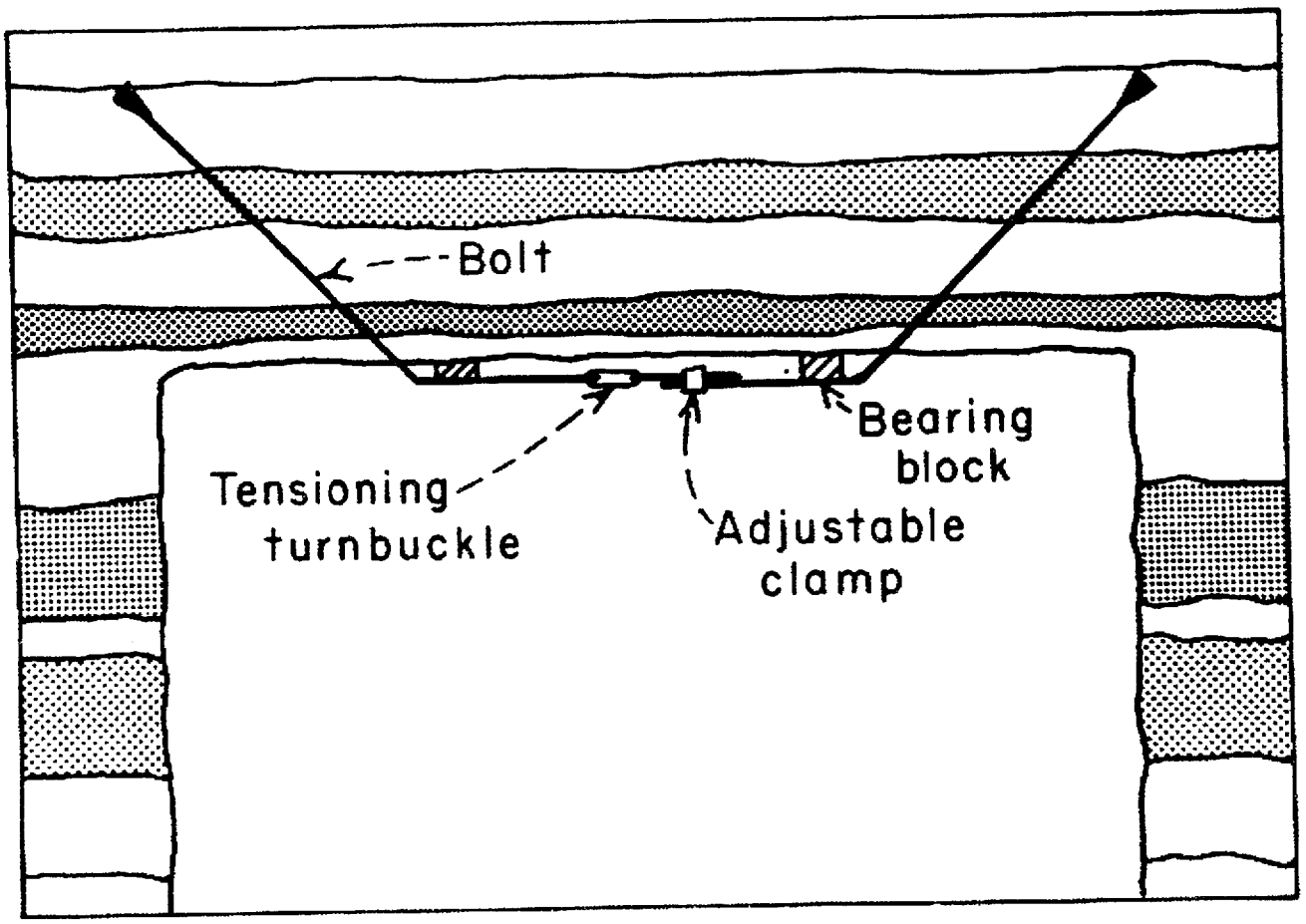

Figure 20. Typical roof truss

A mine roof truss, Figure 20, consists of a roof bolt installed about 45 degrees above horizontal over each rib. The portion of the rock bolt protruding from the rock is bent parallel to the roof. The two bolts are connected by a cable or other cross link that includes a tensioning device. This link is held away from the roof by spacer blocks. The bolts can be anchored mechanically or can be fully grouted. Tension in the roof truss either compresses the roof rock or reduces tension resulting from roof loads. Therefore, roof trusses reinforce roof that is weak or fractured by preventing development on new fractures and increasing friction between fractured blocks of rock. Advantages are a roof truss is anchored above the ribs rather than above the roof, and tensioning the truss compresses the rock in a favorable manner not obtained with other types of support. A major disadvantage is that a truss loses tension because of creep or yielding of the spacer blocks or bolt anchorages which requires periodic retensioning. Another disadvantage is that compressing the roof rock creates tension between the outer edges of a truss and the ribs. They could, however, support long roof spans over intersections where rock bolts alone may be inadequate and space restrictions may eliminate the use of concrete liners or steel sets.

Trusses have been used primarily in coal mines with flat roofs as a secondary support to rock bolts or where bolts cannot be used. This limited use is partly because drilling and installing bolts in the long inclined bolt holes is expensive.

Equations have been developed by the Bureau of Mines to calculate the vertical and horizontal loads on roof trusses. Figure 21 shows a free-body diagram of roof truss loads and parameters. Theoretical curves are shown in Figure 22 which depicts the vertical reaction at the hole collar divided by the truss tension (HCV/H) for a 45 degree bolt inclination.

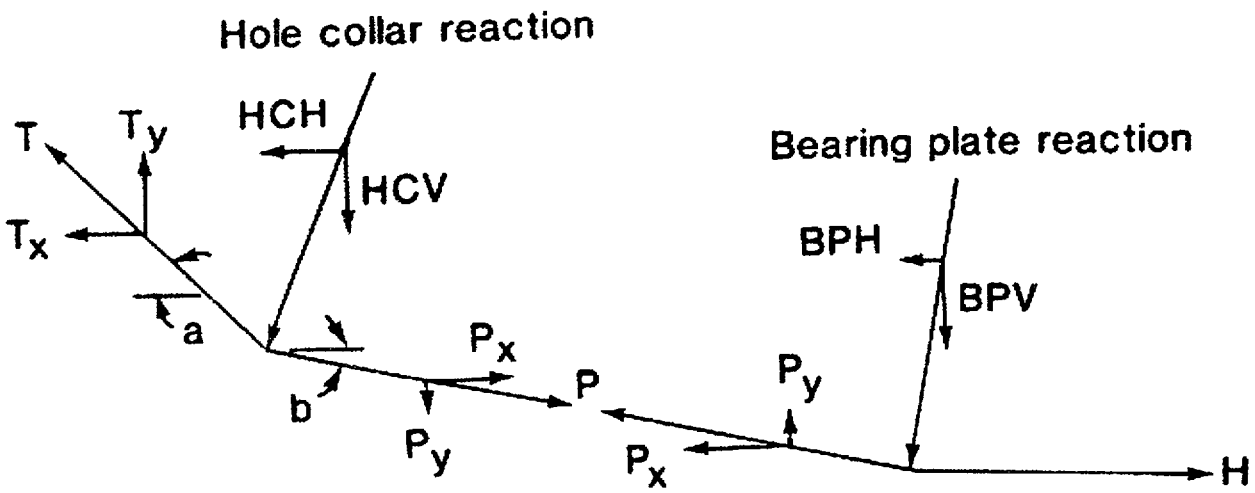

Figure 21. Force diagram of roof truss (50)

A typical calculation of the loads on a truss is shown below as an example. Assuming inclined bolts at 45 degrees, H = 10,000 lbs, and the bearing plate 10 in. from the hole collar, the following holds:

$P = 9{,}400$ lbs

$T = 8{,}000$ lbs

$b = \arctan(2/10) = 11.3099^0$

$BPV = P \sin b = 9{,}400 \sin(11.3099) = 1{,}843$ lbs

$BPH = H - P \cos b = 10{,}000 - 9{,}400 \cos(11.3099) = 783$ lbs

$HCV = T \sin a - P \sin b = 8{,}000 \sin(45) - 9{,}400 \sin(11.3099) =$ 3,813 lbs.

$$HCH = P \cos b - T \cos a = 9{,}400 \cos (11.3099) - 8{,}000 \cos (45) =$$

$$3{,}561 \text{ lbs.}$$

At the bearing plate, the truss would push against the roof with a vertical force of 1,843 lbs directed upwards and a horizontal force of 783 lbs directed toward the center of the entry. At the hole collar, the truss would push against the roof with a vertical force of 3,813 lbs directed upwards and with a horizontal force of 3,561 lbs directed toward the center of the entry. This horizontal compression is the advantage of roof trusses in fractured ground.

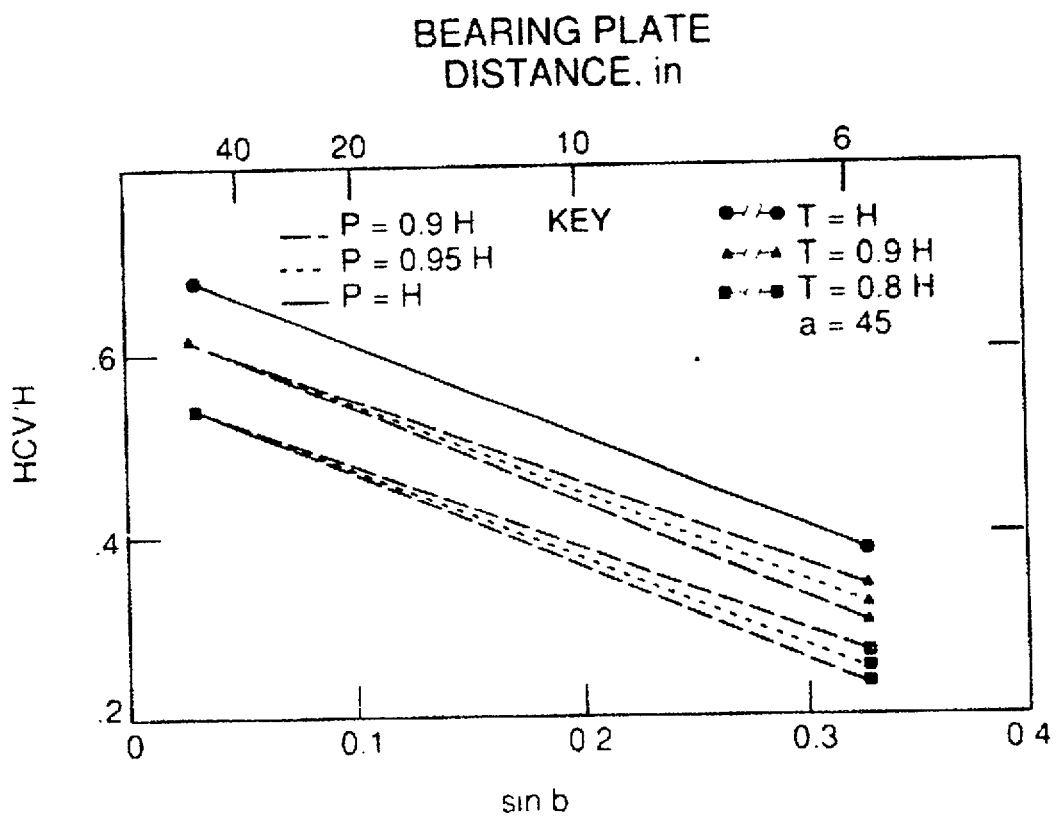

Figure 22. Vertical reaction curves for roof trusses (50)

Rigid Steel Arches

Rigid steel arches have been used extensively for highway and railroad tunneling, and design principles are well established. They provide an arched support of the roof, the continuity of which depends on the amount of blocking and wedging done to transfer the load to the set. Lagging between sets stops broken rock from falling into the opening. The sets most commonly come as curved four-beam segments which are bolted together to form a horseshoe or round shape (see Figure 23). They are blocked in place with wood blocks and wedges. The spreaders and lagging are commonly of timber. The effect of thermal loading on steel sets has not been a concern in tunneling. However, load calculations of 10 x 10 H-steel set which is fully restrained provides a thermal load of 64,000 psi at a 330° F temperature change. Because the sets are generally not fully restrained, an accurate measure of the thermal effect must be determined experimentally or through computer modeling. Without special precautions, the corrosion of steel sets is similar to that of any stressed steel structure.

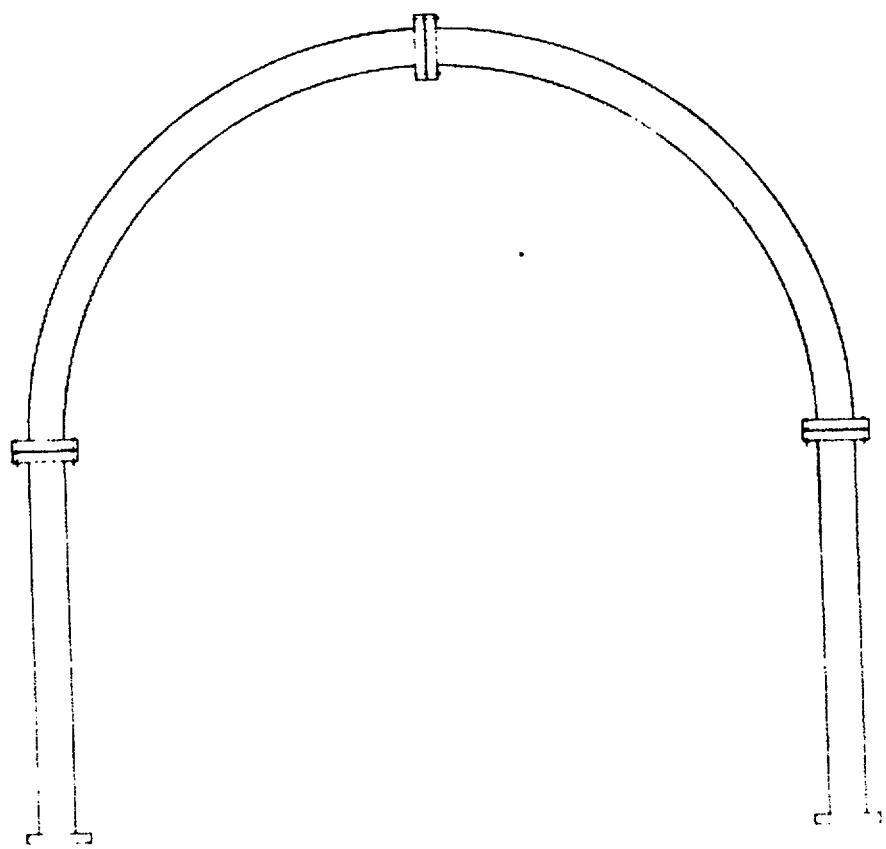

Figure 23. Rigid steel arch (50)

Yieldable Steel Arches

Yieldable steel arches utilize a sliding friction assembly to accommodate loads, thus delaying damage to the support. Yieldable arches are used where extensive rock movements occur due to heavy ground with excessive roof or floor heave. Repetitive maintenance work is reduced when using yieldable arches. When a load exceeds the designed load capacity of the arch, yielding will occur at the overlapping joints. As the joint overlap is increased, the radius of the arch is reduced. The strength of the arch increases as it yields and as the ground settles into a natural contour, loading forces may be brought into equilibrium. Lagging is usually placed between the arches. Footings to provide additional bearing support may be required where the ground is soft (21). Yieldable steel sets as arches and ring sets are shown in Figure 24(a) and 24(b), respectively.

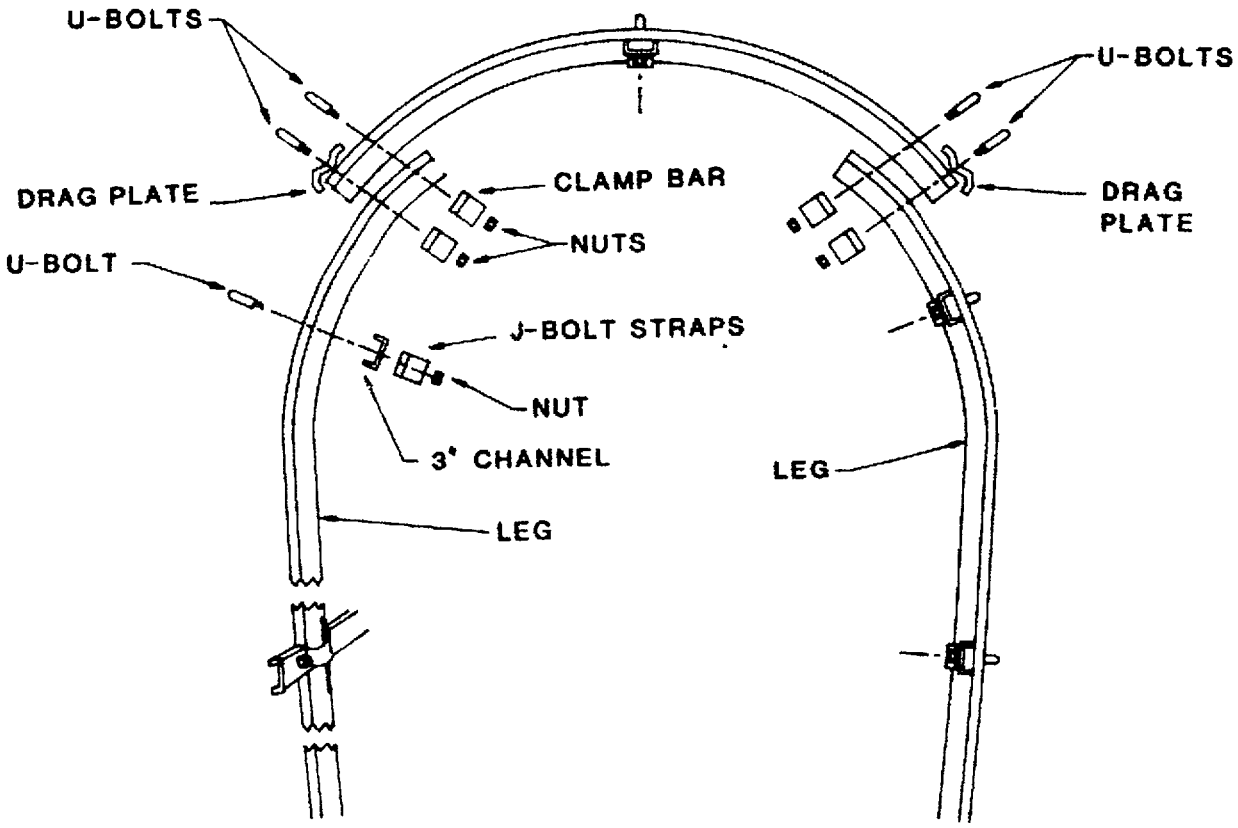

Figure 24(a). Yieldable steel arch (50)

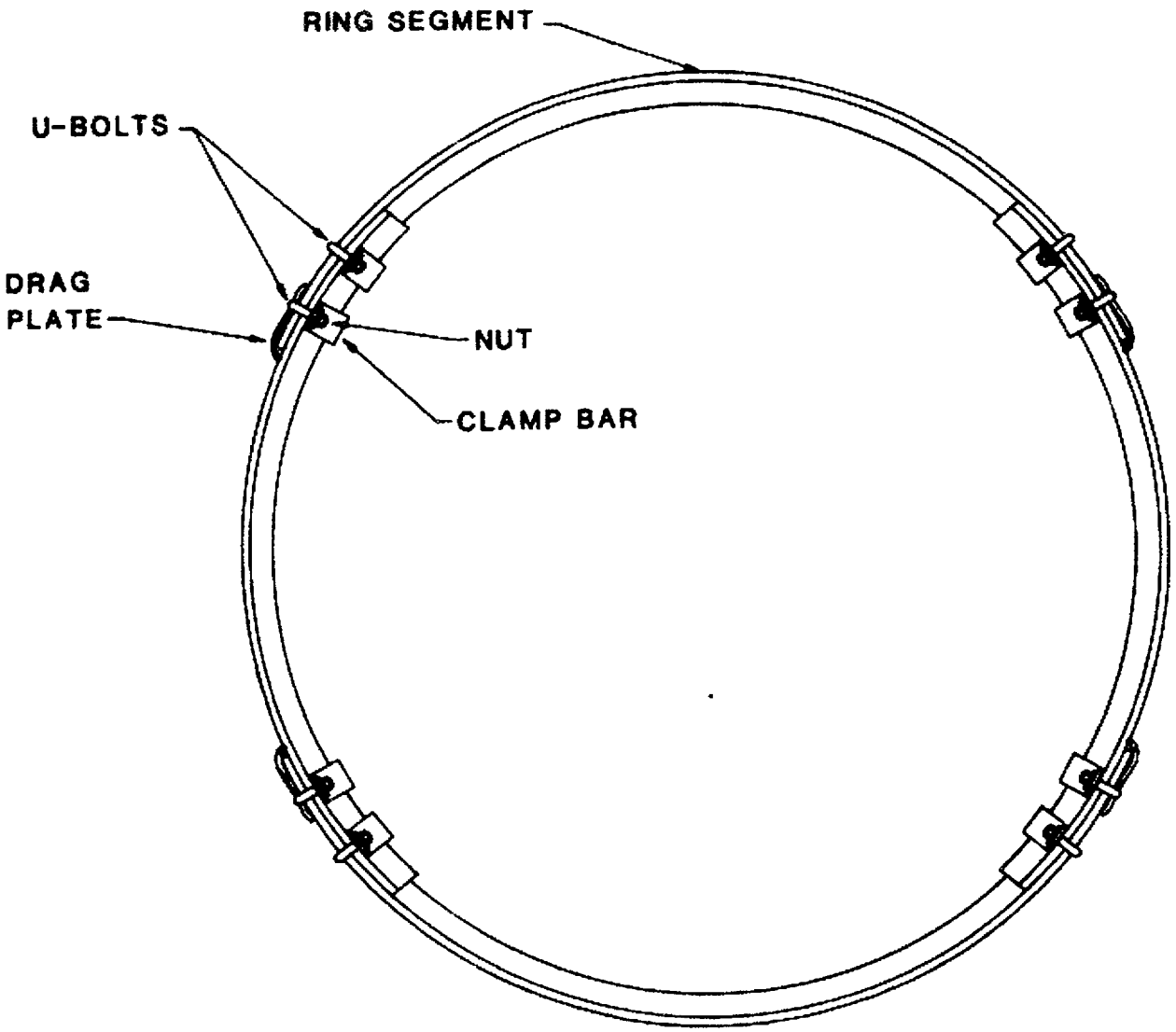

Figure 24(b). Yieldable steel rings (50)

Posts and Timber Sets

Posts are used in many mines where additional or temporary support is needed. Posts are placed vertically between the floor and roof. A header board is used to distribute the load on the roof, and a wedge is driven between the post and header to tighten the support against the roof. Several variations of this method exist. Two posts can be erected with a wooden cross beam to support rock across the opening. This is known as a timber set. Blocking is driven between the cross beam and roof to form a better contact. Occasionally, a steel H or I-beam is used in place of the wooden cross beam. If sets are placed in series, lagging can be placed above the cross beams, running parallel to the opening. This will protect the workers from spalling and sloughing (22).

Roof Jacks

Mechanical roof jacks may operate either in a screw or ratchet manner. These roof jacks are used to temporarily support the roof prior to roof bolting or timbering in the face area. Yieldable hydraulic jacks are support units which yield at a specified load. The yield is accomplished by hydraulic cylinders with pressure relief valves. Yielding is sometimes required when roof convergence in inevitable, and where temporary supports must be left in place for several days (23).

Tunnel Liners

Although the term tunnel lining usually refers to a continuous and solid casting, such as concrete, the term is sometimes applied to a number of roof support mechanisms which fully line the tunnel walls and roof. Various types of segmental steel plates, or liner plates, consisting of curved members, are used where loose ground does not allow very large unsupported areas. There are basically three types of liner plate currently in use.

Corrugated plates, with no flanges, fit together with overlapping joints. This type of liner is not often used since its installation requires access to the outside of the tunnel lining. Corrugated plates with two flanges and plates with four flanges are more commonly used since assembly bolting can be done from the inside of the tunnel. Footings are usually incorporated with the design of these liners. Such footings are either steel channels or concrete (24).

Cribs

Cribs are constructed by laying timbers at right angles on top of each other to support heavy roof loads. Cribbing is not normally nailed together or notched. In permanent openings, cribbing is usually chemically treated. Cribs may also be used with wooden or steel cross beams and lagging (25). Circular columns of monolithic poured concrete have also been used (26).

Steel-Fiber Reinforced Concrete Blocks

Concrete blocks have been used in mines to replace wood cribbing because concrete is not flammable, and it has a higher compressive strength and longer service life than wood. These blocks are commonly stacked in columns or walls, but can be used in a wide variety of unique configurations. The Bureau of Mines completed the development of steel-fiber reinforced (SFR) concrete blocks in 1980 and commercialization followed. They are used extensively by mining companies in the U.S. and abroad. The blocks are 24-in x 8-in x 4-in and weigh 48 lbs.

The key to the success of the blocks is the use of randomly oriented steel fiber in the mix. This fiber makes the concrete behave in a less brittle fashion as shown in Figure 25. As the SFR concrete exceeds its ultimate strength, it begins to lose strength gradually and fails in a controlled manner unlike the explosive and catastrophic failure mode of normal unreinforced concrete. The "control" curve of Figure 25, which is of concrete without fibers, shows the sudden loss of strength typical of plain unreinforced concrete.

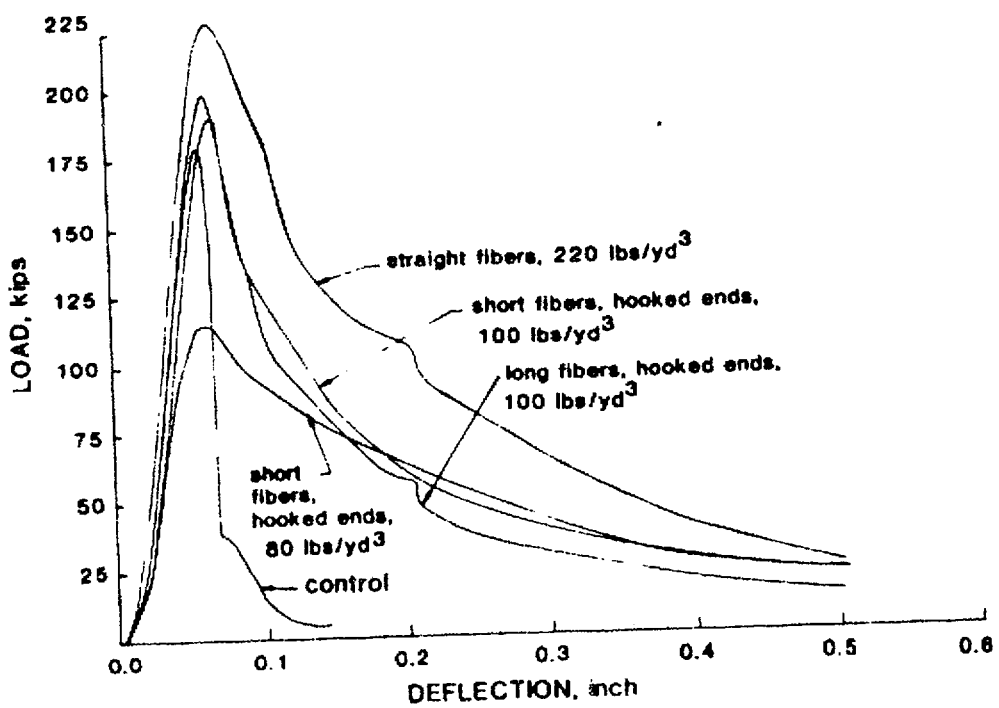

Figure 25. Confined compressive stress vs. deformation for concrete with fiber additive (50)

Concrete

Concrete linings have been used in tunnel and mine drifts for many years and the design principles are well established. Concrete can be either reinforced or non-reinforced and can be used with steel sets and rock bolts. The thermal properties of the concrete are mainly affected by the mineralogic composition of the aggregate. Entrained air also has significant effect on the thermal properties of concrete.

Use of concrete for nuclear reactors has been well documented and modeling of thermal creep effects on three-dimensional concrete structures and comparison with tests are available. The long-term deterioration of concrete may be a problem, but experience shows concrete to be good for over 100 years.

A recent development by the BuMines is the application of foam concrete to underground support systems. Although foam concrete is commonly used for its heat insulating properties, this underground support application is believed to be a unique use of its structural properties. By adding a foaming agent to the concrete mix, its density is reduced thereby forming a cellular light-weight concrete. Some advantages of foam concrete are reduced aggregate requirements as well as pumping and segregation problems. Vibration during placement is not required. The most important advantage is its ability to deform substantial amounts under load without failure as shown in Figure 26. For example, when placed behind a steel liner, transfer of point loads from the surrounding rock to the liner is eliminated. Stresses and strains in the surrounding rock are essentially decoupled from the liner. Consequently, the surrounding rock can undergo substantial movement without excessive deformation of the liner.

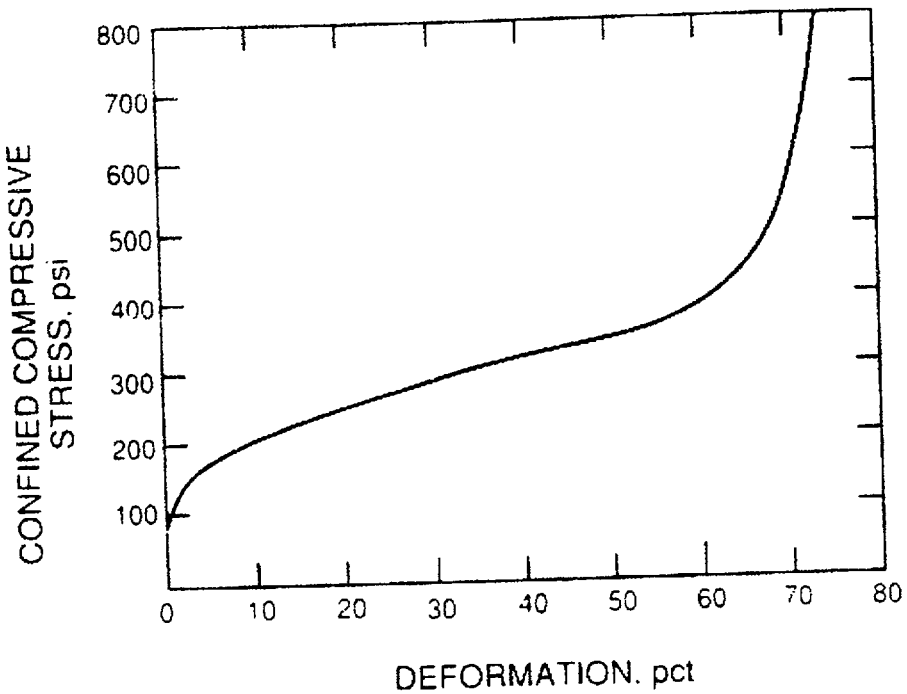

Figure 26. Deformation characteristics of foam concrete (wet density 44.5 lb/ft³, 7 day strength) (50)

An additional characteristic of foam concrete that may be useful in underground repositories is its low heat conductivity. As mines become deeper, heat flow into workings increases leading to increased cooling and ventilation requirements. In South Africa, sprayed coatings of insulating material have been considered for application to underground roadways to reduce heat transfer from the rock. The South Africa Chamber of Mines specifies the insulation should be the thermal conductivity equivalent to 50 mm of material of 0.03 $W/m^2/K$. Conditions similar to those in deep mines could develop in underground repositories by the sensible heat from the rock augmented by heat

from radioactive material. Foam concrete could therefore contribute to the solution of the two problems of heat and support.

Gunite and Shotcrete

Gunite is a pneumatically applied Portland sand-cement mortar. Gunite is used to add support to a mine opening and prevent weathering. Wire netting is sometimes placed against the opening surface and subsequently becomes embedded in the concrete. Guniting is becoming a widely accepted method of effectively and economically supporting rock, provided the opening will stand for sufficient time to permit the concrete to gain its initial strength. Gunite may be applied to all types of rock. Accelerating additives can be used to cause the initial set to occur in a few minutes. The gunite can be applied in thicknesses of 2 to 6 inches with aggregate up to 3/4 in diameter (27).

Shotcrete is concrete that is pneumatically projected onto a rock surface. The concrete is a mixture of cement, aggregate, and accelerator. it is used in tunnels and mines for primary support, as a sealant to prevent weakening or spalling of rock; to reduce water inflow; to cover rock bolts, mats and wiremesh; and as lagging. Figure 27 illustrates a support system using shotcrete.

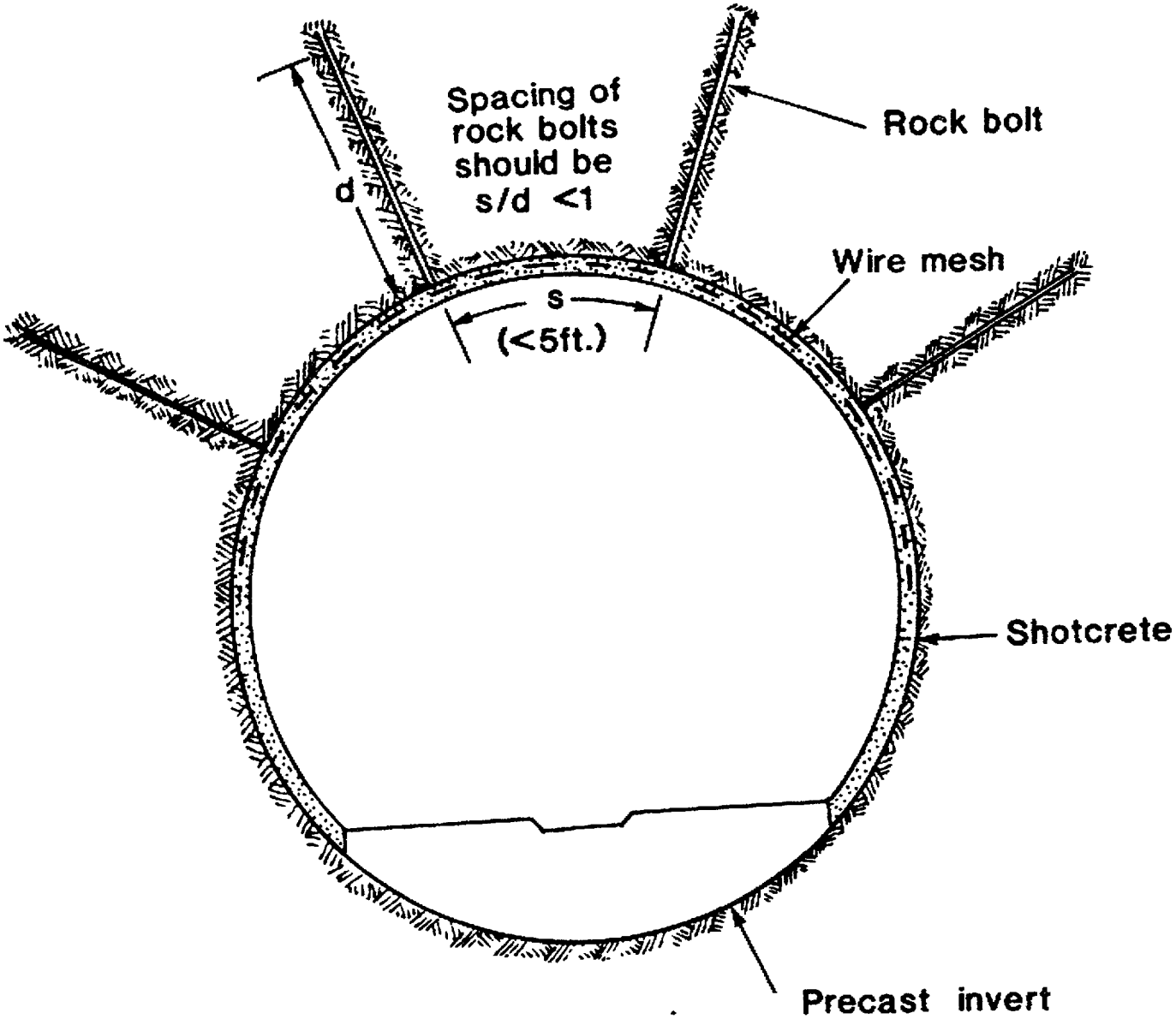

Figure 27. Support system using rock bolts, wire mesh, and shotcrete (50)

The use of shotcrete to stabilize and support underground openings is a newer support method and therefore design principles are not as detailed as they are for steel or concrete. Shotcreting has, however, similar characteristics and problems as concrete. A wire backing is needed where shotcrete does not properly adhere to the tunnel wall. Because shotcrete is a relatively new material (20 years), the experience in handling and placing it, and the knowledge of the long-term structural characteristics is considerably less than that for concrete.

Shotcrete mortar (without aggregate) has a tendency to loosen and spall as stresses in the rock are relieved. Shotcrete containing aggregate, however, has been shown to effectively bond with most rock surfaces and even cohesionless ground. Shotcrete, with a compressive strength up to 10,000 psi, can contain up to 40% aggregate. Chemical additives can be used to adhere the shotcrete to wet surfaces (28).

Grouting

Pressure grouting is used primarily to stop water inflow. Procedures for grouting are well developed and the limitations are well known. The operator must control the mix of the grout while the ability to define the ground conditions is severely limited. Clay, cements, bentonite, and mixtures with sand and flyash can be used. Chemical grouts are newer than cement grouts, and have low viscosities which allow the grout to more easily penetrate cracks, but there is no long-term experience with chemical grouts. On-site tests are needed to determine the optimum grouting material. Laboratory testing is needed to define the effect of temperature and time on the grout.

Roof Stabilization by Resin Injection

Early work with resins to strengthen coal mine roofs used a method which injected chemicals into the strata, thus forming a consolidated, self-supporting rock beam. Laboratory and underground testing led to wide scale testing which developed a system enabling resin to be forced into strata ahead of the working face, producing a consolidated roof before exposure.

Organic resins, under pressure, may be pumped into bore holes, filling small cracks between rock which bonded layers together and consolidated the roof rock. The economics of this method limit its use to specialized cases. Problems encountered with this method include the high viscosity of the resin used and the high pumping pressures, which can induce rock failure (29). A two-component polyurethane injectable system called "Roklok Binder[R]" is currently being marketed by Mobay Chemical Company, Pittsburgh, PA.

Backfill

Backfill is defined as the emplacement of material, such as waste rock or coarse tailings, into the underground opening to support the roof, ribs and also limit surface subsidence. In an underground repository, it could be a permanent support or a temporary support to be removed later if retrieval of nuclear waste is required.

In mines, backfill is almost always used as a permanent support. It commonly consists of mill tailings or crushed rock. Portland cement may be added to improve strength. Backfill is usually pumped into a mine in slurry form, i.e. a mixture of ground solids and water, although pneumatic placement is

sometimes used in flat-lying mines. Hydraulic backfilling with classified sand material is often considered to be the most effective method of supporting a mined-out opening (30). When stopes are hydraulically backfilled, access to the stopes must be closed off. Bulkheads of concrete or heavy timber should be capable of sustaining hydrostatic needs equal to the full height of the opening. Large bulkheads are valved to bleed off liquids (31).

There is little experience in the mining industry in using backfill as temporary support. In some anthracite coal mines in Pennsylvania, backfill, locally called culm, has been used as support and was occasionally mined through to develop additional workings.

In a repository, two possible scenarios could involve backfill:

1. Backfill is placed soon after emplacement of nuclear waste and a retrieval by mining through the fill option is maintained.
2. The repository is backfilled after all nuclear waste is emplaced and prior to decommissioning the repository.

The modulus of elasticity of mine backfill ranges from only 68 MPa (10,000 lb/in^2) to 136 MPa (20,000 lb/in_2). Substantial displacement of wall and roof rock must occur before there is significant deformational interaction and passive support is obtained. This interaction is accompanied by significant fracture, i.e. failure of roof and wall rock, which is assumed unacceptable in a repository.

Expanding type backfills have been proposed that are a mixture of crushed rock and bentonite. The expansion characteristic is due to the property of bentonite to absorb water and expand. This characteristic is desirable as it would retard or prevent the migration of radionuclides. However, the support characteristics of this mixture are unknown.

Concrete has been used to fill abandoned mines where subsidence must be prevented to protect overlying buildings from damage. It has not been used by the mining industry for backfill because of the high cost.

THERMAL PROPERTIES OF SUPPORT MATERIALS

Steel

The influence of temperature on the strength of steel is shown in Figure 28 (32). If the maximum temperature of the rock nearest the canisters is 200 C (392 F) as indicated in the EA and the supports also reach this temperature, this data indicates over 90 percent of the ultimate strength of the steel supports will be retained. Data from another source, Figure 29, shows that the yield strength of both cold worked and hot rolled steel increases as the temperature is increased from room temperature to a worst case, near canister, temperature of 200 C (392 F) (33). Furthermore, when cooled to room temperature, approximately 50° C, from 200 C (392 F), yield strength does not deteriorate indicating steel is not damaged by temperature excursions between room temperature and 200 C.

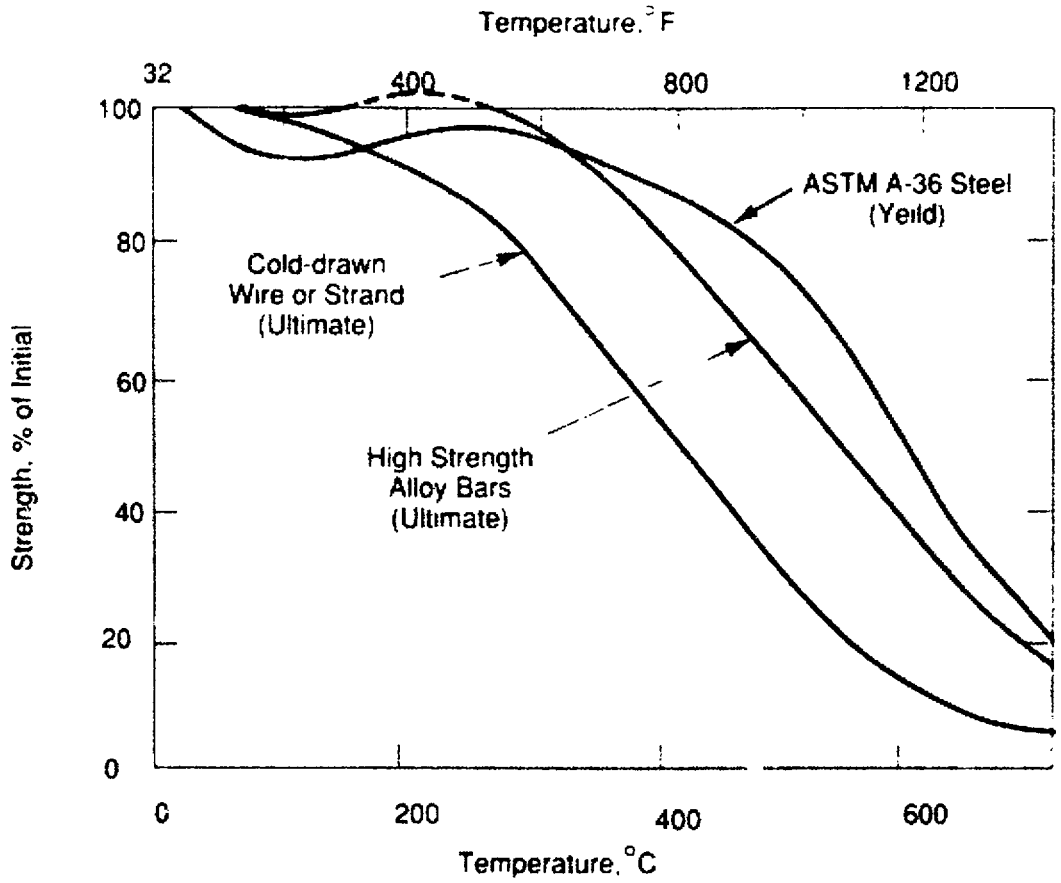

Figure 28. Strength vs. temperature for various steels (50)

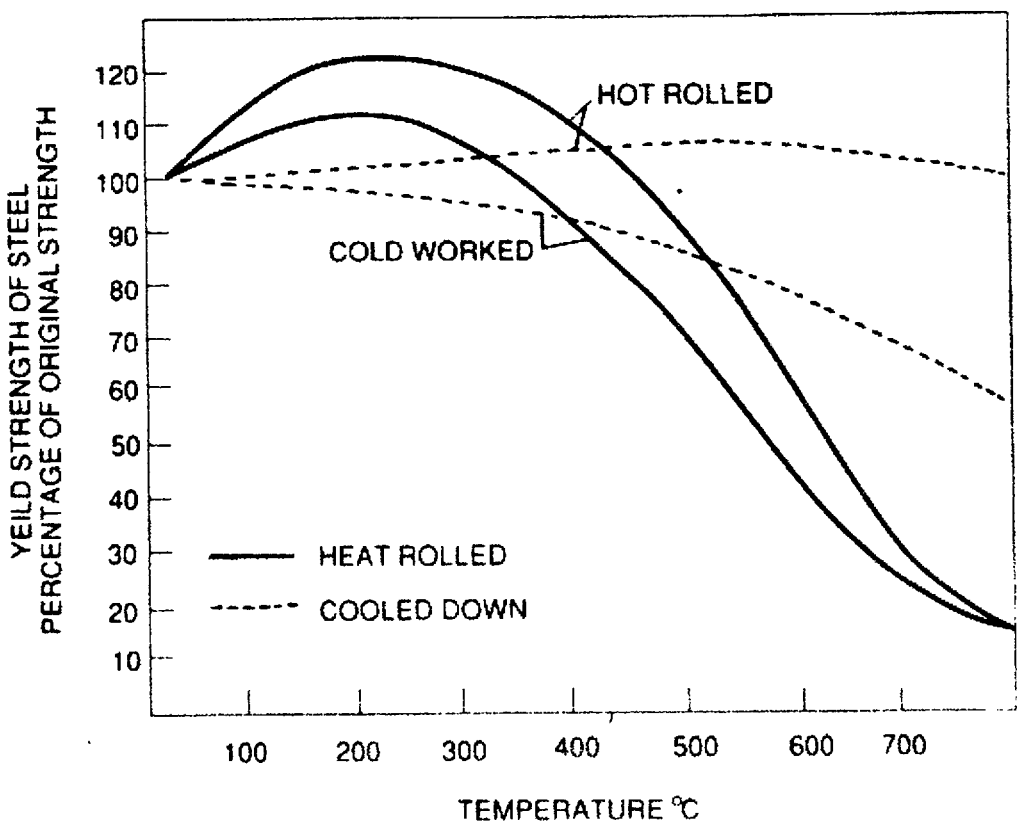

Figure 29. General yield strength for hot and cold worked steel vs. temperature (50)

Steel can deform from the long-term interaction of stress, temperature, and time. This characteristic, called creep, is the progressive deformation of a material under stress. It can lead to severe deformation and eventual fracture. Generally, creep rate is higher with increasing temperature and stress.

Below one-fourth the melting temperature (in degrees Kelvin), initial creep rate, if present, rapidly decreases to zero (34). For steel, this temperature is about 180 C (356 F). At one-third, the melting temperature, 330 C (626 F), creep rate is very small and remains constant for a substantial period of time. Even at the most extreme, near canister, temperature of 200 C (392 F), creep rate of steel supports is expected to be zero or extremely small.

Concrete

Concrete is used for underground supports in the form of concrete linings and shotcrete as well as grout for sealing cracks and joints primarily to reduce water inflow.

When concrete is heated to 100 C (212 F), free water is vaporized and diffuses to the surface. No structural damage occurs. At temperatures between 100 C (212 F) and 260 C (500 F), the absorbed heat causes chemically bonded water to separate. Steam is generated and escapes to the surface. Strength loss is about 10 to 15 percent (35). At temperatures above 260 C (500 F), the cement paste decomposes. Cracks are created and these can propagate to the surface. Also, the addition of thermally generated stresses can crush the concrete. Figure 30 shows the effect of temperature on the compressive strength of concrete.

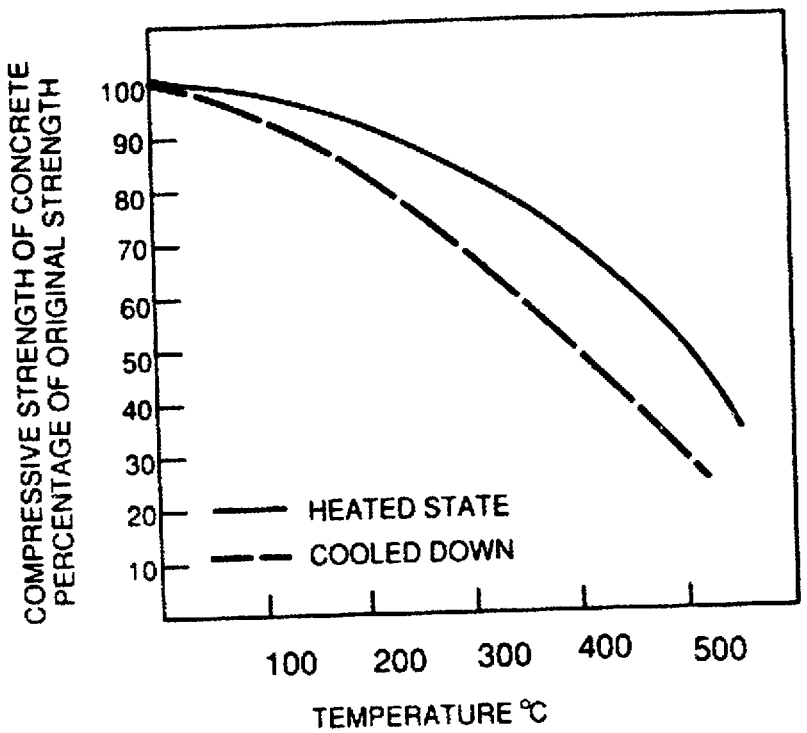

Figure 30. Compressive strength of concrete vs. temperature (50)

Creep tests have been performed on concrete largely to determine its response to heating in fires. For three-hour heating tests, creep plays a very limited role in the overall behavior of concrete for temperatures below 400 C (Abrams). Creep tests of concrete exposed to 10.3 MPa (1500 lbf/in^2) and 177 C (375 F) indicate total creep for 12-in test cylinders is represented by the following relationship (35):

$$C = 286.9 \log t + 718.6$$

C = total creep, millionths of an inch

t = time, days

The creep of a 10-ft high concrete wall after exposure to this temperature and stress for 100 years would be only about 0.2 inches. Using these experimental results as a guide, the creep rate of concrete at the worst case, near canister, rock temperature of 200 C (392 F) is likely to be small.

Inorganic Grout

Grout based on portland cement has in general similar characteristics to monolithic concrete. Exposure to temperatures as high as of 200 C (392 F) and a low pH (acid) environment could lead to serious deterioration. It is also subject to other types of chemical attack such as leaching by water containing dissolved carbon dioxide and disintegration from exposure to sulfates. Gypsum-based grout begins to dehydrate and lose strength at temperatures above 46 C (115 F); rapid dehydration and severe strength loss occurs at 149 C (300 F). Conversely, calcium-aluminate based grout has excellent tolerance to both high temperatures and a wide pH range. It could be satisfactory for grouting rock bolts in high-temperature repository environments. However, little information or experience on its use by the mining industry is available largely because of the high cost which is three to four times the cost of Portland cement-based grout.

Organic Grout

Organic grout, usually polyester or epoxy based, is commonly used in underground openings to anchor rock bolts. However, the strength of epoxy decreases precipitously above 100 C (212 F). The effect of temperature on a filled polyester resin is shown in Figure 31. These resins would not be suitable in high-temperature repository environments, but adding strengthening fibers to the resin increases performance. For long fibers, the performance of the composite is dominated by the properties of the fibers. Many of the fiber additives can withstand high temperatures, and these would therefore increase the high-temperature performance of the composite grout. How to effectively orient the fibers in the drill hole to obtain maximum performance has not been solved. Also, a wound fiber "cocoon" around the rock bolt has been suggested, but these ideas need further development.

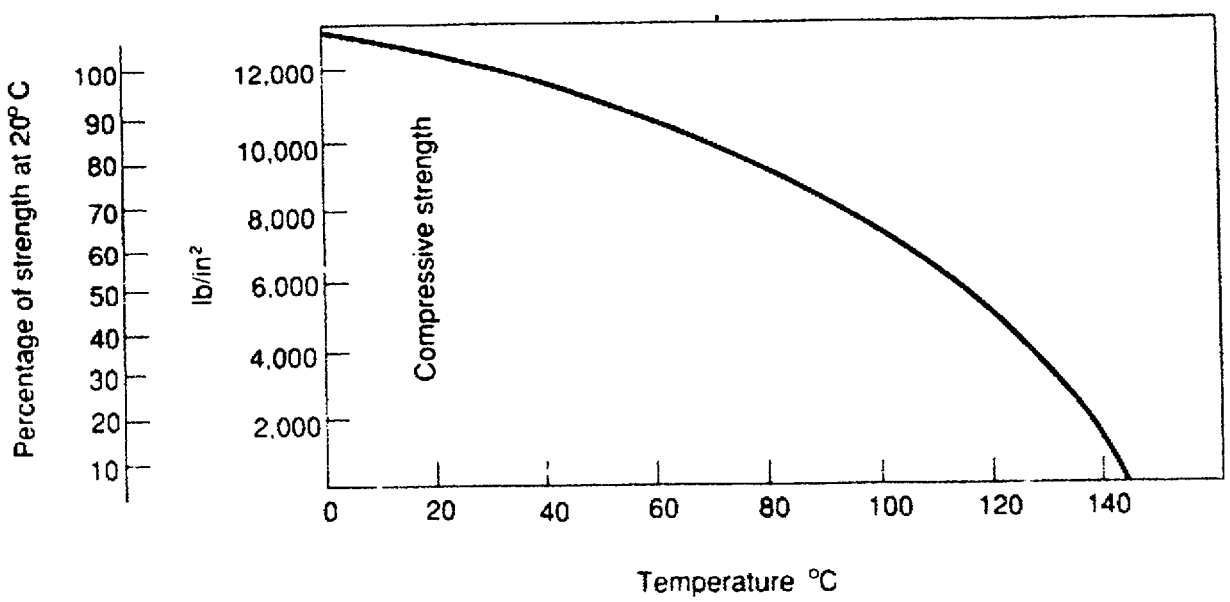

Figure 31. Temperature vs. strength for polymer resin (50)

Some polymers can be used at higher temperatures than those that are epoxy or polyester based. A class of resins called polyimides can survive continuous exposures to more than 300 C (572 F) (36). The temperature limit for avimid resin, which is used in manufacturing composites primarily for the aerospace industry, is 316 C (600 F) (37).

These resins will not be suitable for anchoring rock bolts without drastic alteration of the usual installation procedures because they require a heat treatment at 204 C (400 F) to remove about 15 percent volatiles which causes considerable shrinkage. However, many other classes of polymers can resist higher temperatures than epoxy or polyester, and these should be investigated for their suitability in anchoring rock bolts in high-temperature environments.

Bond Strength

The bond strength between reinforcing steel and concrete decreases at high temperatures. A strength reduction factor of 0.7 is suggested for designing steel reinforcement in reinforced concrete buildings that could be exposed to temperatures between 100 C (212 F) and 300 C (572 F) from a fire; concrete heated to temperatures above 300 C (572 F) is considered unsuitable for reuse. Laboratory tests of bond strength loss at 200 C (392 F) indicate the factor is actually about 0.8, and therefore 0.7 can be considered a conservative design factor (38). These data have been developed primarily as an aid in the design of reinforced concrete buildings that could be damaged from rapid heating in a fire.

It is questionable whether these data can be directly applied to grouted rock bolts in a repository because the pull-out resistance of a grouted rock bolt depends largely on mechanical interlocking between the bolt and grout rather than resistance of the bolt-grout bond. Although the grout fractures and "debonds" at low displacements, pull-out resistance is maintained to surprisingly large displacements.

Mechanical Anchors

Conventional mechanically-anchored bolts generally employ one of the two common types of expansion-shell anchors. These are classified as either the standard plug-type anchor or the bail-type anchor. The standard anchor has leaves rigidly attached at the base, while the bail-type anchor has leaves which are free at the base and are attached by means of a wire bail at the top (Figure 32).

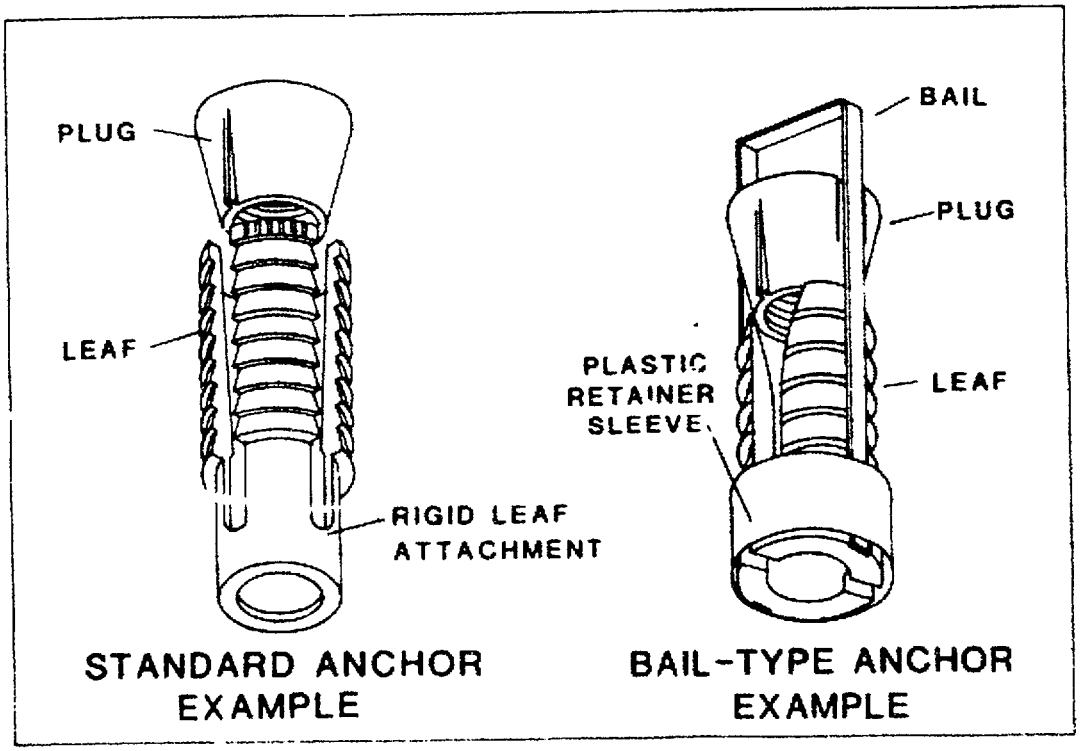

Figure 32. Mechanical Anchors - Standard, left; Bail, right

Both types of anchors employ the same mechanics to provide anchorage, by forcing a tapered plug through the leaves, expanding the leaves and gripping the borehole wall. The two anchors, however, contact the borehole differently. Due to the rigid attachment in a standard anchor, there is a smaller contact area, located mainly at the maximum plug dimension. In contrast, the bail-type anchor maintains contact along nearly its entire length, due to its nearly unrestricted leaf movement. In theory, the greater contact surface of the bail type would minimize the stresses in the surrounding strata of soft rock and would provide superior anchorage.

A standard plug type anchor in soft rock would tend to create high stresses in the rock and cause localized crushing. In extremely hard rock, the high penetration stress created by a standard anchor would adequately allow the leaf serrations to penetrate the borehole walls whereas the bail-type anchor, due to its greater surface area, would be difficult to set and tend to slip in the hole. In medium-strength materials, the two anchor types should perform equally as well.

Anchorage tests on many expansion shells in various types of rock have shown that a general correlation with the above discussion is evident. There are some exceptions due to design variations such as leaf and plug size and angle, serration type and size, and the shell material itself (39).

Tension

Numerous studies have shown that mechanically-anchored bolts should be installed in a controlled pattern and at equal tension levels. Torque is

normally used as a means of determining the tension in a bolt. A torque-tension relationship is determined by installing bolts at various levels of tension and recording the resisting torque at each load level. The slope of the line, determined through linear regression analysis, is the torque-tension ratio. To determine the necessary torque, the design bolt load is divided by the torque-tension ratio (40).

Thrust

The application of thrust against the bolt head during the tightening cycle is another important parameter which affects the uniformity of rock bolt loads. When inserting a bolt, all or part of the thrust of the bolting machine may be applied. Laboratory tests using various levels of thrust have shown that thrust will decrease the installed tension by an amount equal to the thrust plus a quantity from localized galling. Thus, a random application of thrust will result in a random bolt tensioning. It is advisable to torque all bolts with as close to zero vertical thrust as possible (41).

Anchorage Tests

Anchorage tests on mechanical anchor bolts may be performed through several means. Among the tests are torque wrench readings, and pull tests. The pull test is a good indicator of the anchorage capacity of a mechanically anchored bolt. The pull test is a short-term anchorage test used to determine the anchorage strength of the bolt assembly. The pull test subjects an installed bolt to a direct pull by means of a hydraulic pump and a hollow ram. The load applied to the assembly is read from a gauge on the hydraulic pump, and the

deflection, or travel, of the bolt assembly is measured by an extensometer. The load and deflection data is recorded at specific load increments. This data may then be plotted as a load-yield curve (42).

A typical pull test yields many helpful insights into the anchorage of the bolt assembly (Figure 33). Point A is the point at which the jack load begins to be transferred to the bolt. At Points B and C the jack loads and bolt loads are the same. Point D is a close approximation of the installed bolt load (43). From A to B the anchor plug is being forced into the leaves of the anchor. The slope of the line AB depends on the bluntness of the leaf serrations, the contact area between the shell and rock, and the elasticity of the rock. The center of the curve - line BC - represents displacement of the bolt head, caused by slippage of the anchor, or yielding of the bolt. The bolt reaches its ultimate anchorage limit at C.

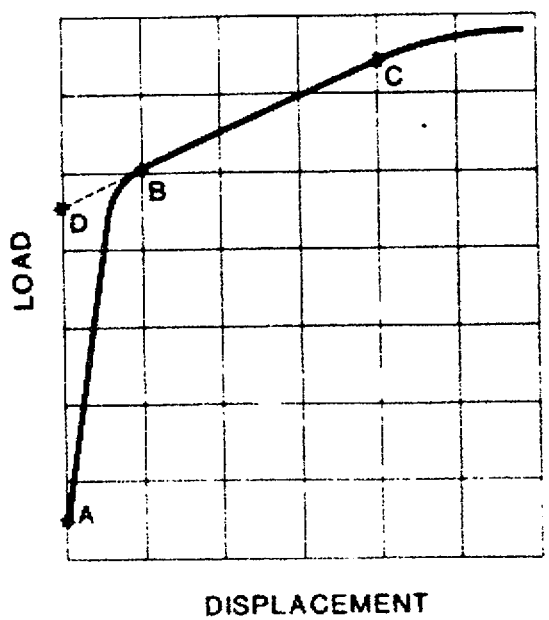

Figure 33. Idealized curve for a pull test on a mechanical anchor bolt (43)

Bolt Grout Systems

Improved organic grouts based on epoxy resins have been developed under Bureau of Mines funding. These resins are comparable to existing polyester grouts in installation time, but have several advantages including about 50 percent greater strength, better bonding to rock, unlimited shelf life, higher flash point, and potentially lower cost bulk injection. Low cost, fast setting, inorganic grout systems based on gypsum cement have also been developed by the Bureau of Mines. One such system, which uses wax encapsulated water beads and packaged in cartridge form is now available commercially. Other bulk injection type inorganic grouts are still in the development process.

Several tests have been conducted to establish optimum parameters for various aspects of installing resin bolts. The annulus of resin around a bolt has been found to play a major role in the strength of a grouted bolt. Tests on various diameter bolts in various diameter holes illustrated that there is an optimum hole diameter for a particular bolt. When the diameter of the hole was too large or too small, the anchorage capacity was significantly reduced. Through analysis of the results, it was found that the diameter of the hole should be 1/4 inch larger than the bolt (44).

Tests to determine the effects of installing a resin-grouted bolt in wet holes have also been conducted. Holes were wet-drilled into a block of sandstone, cleaned with water, and bolts were installed into holes which were filled with water. Comparison with results obtained in dry drill holes yielded similar anchorage capacities. Providing that drill cuttings are cleaned from the hole, the effect of wet-drilling on anchorage capacity is negligible (44).

Tests on the effects of moderate temperatures on the anchorage of resin-grouted bolts were also conducted. Short-term tests carried out at 52°C (126°F) suggest that bolt thread deformation will occur before the resin yields. These tests suggest that moderate elevated temperatures will have little effect on short-term bolt anchorage capacity (44).

Resin shear strength tests have been conducted by a resin manufacturer at 70°F in the presence of water, 5% sodium chloride solution, and 5% sulfuric acid solution. Under these conditions the strength levels off after apprc mately 120 days. The real concern is not the salt/brine solution to long-term support, but rather for the 400°F temperature and to radiation which will deteriorate the polyester resin. The maximum temperature for polyesters is about 300°F; above this slow decomposition occurs (45).

Epoxy resins have also been used for anchoring machinery to foundations. Temperature effects have been evaluated under these conditions. Because epoxy is basically a plastic, the properties of epoxy-based grout can vary radically with temperature changes. Above about 180°F, epoxy begins to exhibit a rather dramatic elasticity. The modulus of elasticity of steel, for example, is about 3,000,000; for epoxy-based grout, it is about 2,500,000...until the grout is heated. Then the modulus of elasticity drops off to 100,000 (46).

Experimental simulation of rock bolt creep was conducted in a laboratory by measuring anchor displacement with respect to time when a constant load is applied to the bolt. Anchorage displacement was measured at the rear of the bolt. This was done by drilling holes through the blocks. The holes were

sealed at the far end during bolt installation. This manner of testing was chosen so that elastic deformation of the bolt would not effect the displacement reading. The dial gauge was mounted at the rear of the block. Creep tests using sandstone as the host rock suggest that the rate of anchor creep decreases with time until stability of the anchor is achieved. The effect of increasing the length of grout was to significantly reduce the amount of creep for a given load (44).

A long-term resin creep test was conducted by the Bureau of Reclamation at Temperatures between 65°F and 80°F. The resin anchor performed well in all tests; resin curing time was short; early and sustained load carrying capacities were good. An initial tensile load of 166 MPa (24 000 lb/in^2) was applied to the system, and load reduction due to creep was monitored. The tendency of the rock bolt resin anchor system to creep appeared to decrease with time, with a maximum load reduction of 27 percent occurring over an elapsed time of 21 months (47).

It has been found that the axial stiffness of resin-grouted bolts can be 10 to 20 times greater than that of mechanical bolts (48). A ribbed rebar-type resin-grouted bolt fails by failure of the steel bolt in hard rock. A smooth bolt, however, pulls out of the resin when subjected to a pull test. This indicates that mechanical interlock is the primary means of stiffening. In soft rock, the bolt assembly will fail at the resin/rock interface, indicating that the resin is stronger than the rock. A larger diameter hole and associated steel bar should provide an increased anchorage capacity in soft rocks (48).

Under axial loading, it has been found that the load on a bolt decays to zero at a distance into the grout. A load is distributed over a shorter distance, approximately 15 inches, in hard rock, and a greater distance, 30 to 40 inches, in soft rock. This distance, known as the load transfer length, is a factor into which thickness of layers in a bedded mine roof must be taken into consideration. Creep of resin-grouted bolts has been found to increase the load transfer length with time, especially in softer rock (48).

The increased shear strength of joints in rock where the joints are penetrated by grouted bolts is a particular advantage of resin-grouted bolts, especially at low normal loads for bolts oriented normal and ±45° to the joint surface. Under transverse shear loads, little benefit was found from tensioning of the bolt (48).

In relatively soft rock, with failure occurring at the resin/rock interface, the thickness of the annulus of resin is a limiting factor independent of bolt diameter. Thus, if a larger hole diameter is necessary to reduce shear stress at the resin/rock interface, a larger diameter bolt should be used, keeping the annulus thickness at the optimum. A small resin annulus thickness of 1/8 inch gives the maximum anchorage (48, 49).

Yielding Bolts

In many support situations, a bolt which can yield under load would be advantageous. Yielding bolts are most useful in supporting highly mobile ground where large deformations of the strata would otherwise overload

the bolt. Several designs have evolved and hold promise, but none have been widely used commercially due mostly to their high cost.

Yielding bolts are designed to provide continuous support while rock undergoes sudden or slow movement. Several variations have been developed by different researchers. South African (Ortlepp), Bureau of Mines (Conway and Helical), Army Corps of Engineers (Allen), Modified Split Set Bolts (Scott), and Meypo Yielding Anchors from Switzerland are some examples. The Meypo Yielding Supports are being marketed in Europe. While there are variations in the models, the yielding principal is basically the same except for the helical bolt; i.e., the bolt is permanently deformed during yielding by drawing it through a die. In highly stressed rock where displacements are large, the yielding support acts to retain the fractured rock under constant load while the surrounding rock undergoes stress redistribution or the opening is stress relieved.

Yielding of most conventional supports cannot occur during the sudden high strain-rates experienced during a rock burst which is a violent movement of rock. Such movement causes abrupt failure of conventional supports. Because yielding bolt supports are designed to accommodate large displacements, they will also help to preserve the integrity of the opening and minimize damage during rock bursts.

Computer Models

Rock bolt capabilities can be predicted, to some extent, using computer models. The Bureau of Mines is comparing computer models with actual measurements taken from the Mine Roof Simulator located at the Spokane, Washington Research Center. This simulator contains a 6-ft high x 15-ft wide entry having up to 16 rock bolts. Different roof loadings can be imposed and the interactions between the roof loading and rock bolts are measured and correlated using a computer. The close similarity between the actual rock bolt/roof loads and the BMINES and ANSYS computer model predictions are shown in Figure 34.

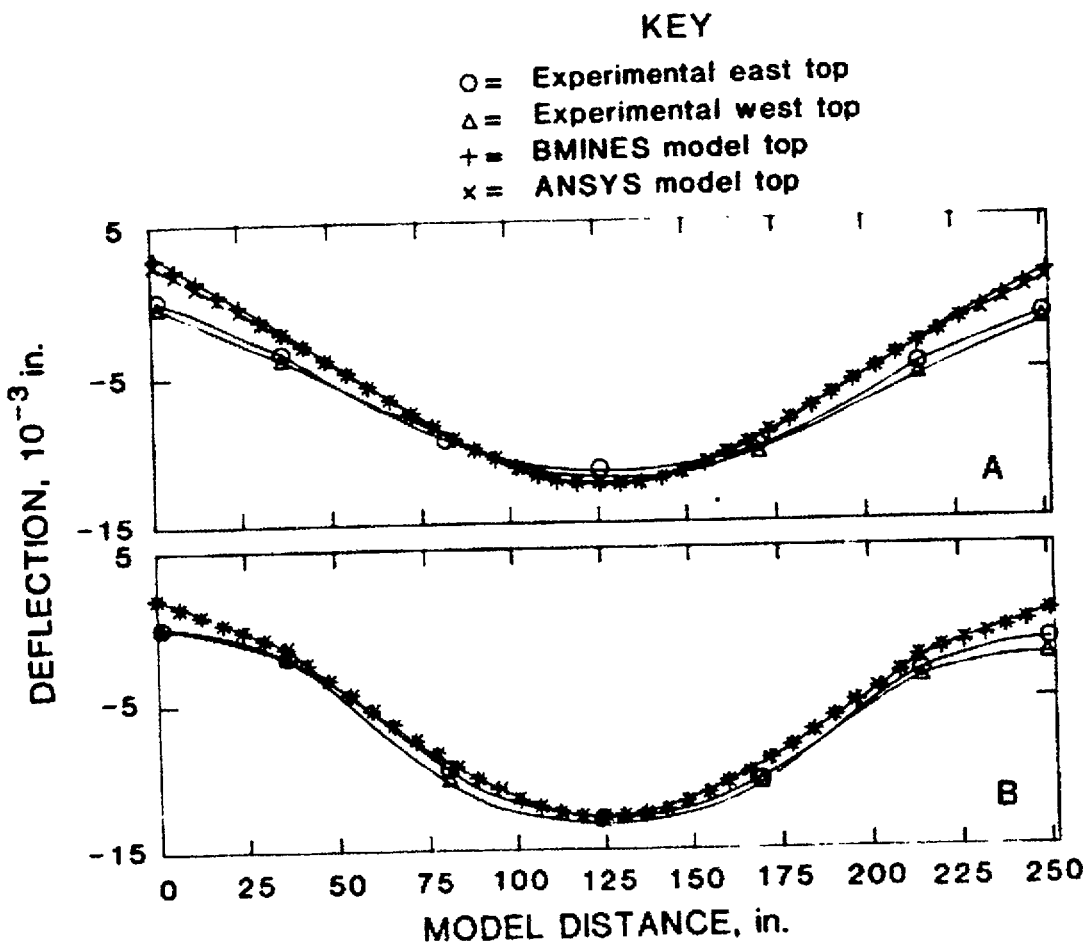

Figure 34. Comparisons of measured and theoretical deflections from the roof bolt simulator (50).

REFERENCES

(1) Thomas, E., Barry, A. J., Metcalfe. Suspension Roof Support, Bureau of Mines Information Circular 7533, September, 1949, p. 6.

(2) Weigel, W. W. Engineering and Mining Journal, vol. 144, No. 5, May 1943, pp. 70-72.

(3) Engineer Manual EM 1110-1-2907, U.S. Army Corps of Engineers, 1974.

(4) Beyl, Z. S. Rock Pressure and Roof Support. Colliery Engineer, 6 Part, Sept. 1945 to Oct. 1946.

(5) Conway, C. C. Roof Support with Suspension Rods. Mining Congress Journal, June 1948, pp. 32-47.

(6) Thiel, P. S. Recent Developments in Roof Bolting and Roof Bolt Installation Procedure, the Canadian Mining and Metallurgical Bulletin, October 1964, pp. 1050-1062.

(7) Cummins, A. B., and Given, I. A. SME Mining Engineering Handbook, 1973, Vol. 1, pp. 13-125.

(8) Karabin, G. J. and Hoch, M. T. Contemporary Roof Support Systems Provide Diversified Approach to Modern Ground Control. 10th Annual Institute of Coal Mining Safety and Research, 1979, Virginia Polytechnic Institute, Blacksburg, Virginia.

(9) Op. Cit., Chapter 13, pp. 22 and 25.

(10) Scott, J. J. Interior Rock Reinforcement Fixtures, 21st U.S. Symposium on Rock Mechanics, University of Missouri, Rolla, May, 1980.

(11) Thomas, E. M. and Smedberg, M. Manual on Rock Bolting, Atlas Copco Corporation, 1959.

(12) Op Cit.

(13) Cummins, A. B. and Given, I. A. SME Mining Engineering Handbook, 1973, Vol. 1, Chapter 13, pg. 135.

(14) Op. Cit. Chapter 13, pg. 138.

(15) Hansen, J. S., S. J. Gerdemann, Pull and Creep Tests on Gypsum-Bonded Roof Bolts, Bureau of Mines, Report of Investigations 8937, 1985.

(16) Op. Cit.

(17) Roberts, M., New Roof Bolt Passes U.S. Tests, Coal Age, July 1980, pp. 122-127.

(18) Conway, J.P., S.M. Dar, J.H.Stears, and P.C. McWilliams. Laboratory Studies of Yielding Rock Bolts. BuMines RI 8058, 1975, 40 pp.

(19) Ortlepp, W. D. and Reed, J. J. Yieldable Rock Bolts for Shock Loading and Grouted Bolts for Faster Rock Stabilization, The Mines Magazine, March, 1970, (Colorado School of Mines), pp. 12-17.

(20) Babcock, C. O. A Flexible Helical Rock Bolt, BuMines RI 8300, 1978.

(21) Cummins, A. B. and Given, I. A. SME Mining Engineering Handbook, 1973, Vol. 1, Chapter 13, pg. 146.

(22) Op. Cit., Chapter 13, pg. 146.

(23) Op. Cit., Chapter 13, pg. 148.

(24) Op. Cit., Chapter 13, pg. 153.

(25) Op. Cit., Chapter 13, pg. 147.

(26) Op. Cit., Chapter 13, pg. 162.

(27) Op. Cit., Chapter 10, pg. 49.

(28) Op. Cit., Chapter 12, pg. 29.

(29) Op. Cit., Chapter 13, pg. 137.

(30) Op. Cit., Chapter 13, pg. 175.

(31) Op. Cit., Chapter 12, pg. 252.

(32) Abrams, M.S. Behavior of Inorganic Materials in Fire. Portland Cement Association, 1979, 36 pp.

(33) Morley, P.D. and R. Royles. The Influence of High Temperature on the Bond in Reinforced Concrete. Fire Safety Journal. Vol. 2, No. 4., 1980, pp. 243-255.

(34) Guide to Engineered Materials. ASM. 1986, 88 pp.

(35) Gillen, M. Final Report on Long-Term Creep of Hanford Concrete at 250 C and 150 C. DOE RHO-C-50, 1980, 18 pp.

(36) Chou, Tsu-Wei, R.L. McCullough, and R.B. Pipes. Composites. Scientific American, Vol. 255, NO. 4, 1986, pp. 192-203.

(37) Aviation Week. Composites. Vol. 125, No. 15, 1986, pp. 90-102.

(38) Morley, P.D., and R. Royles. Use of Bond Stress-Slip Data for Studying the Effect of High Temperatures on the Bond in the Anchorage Zone of Reinforced Concrete Structures. Proc. Inst. Civ. Engrs., Part 2, 75, 1983, pp. 657-669.

(39) Karabin, G. J. and Debevec, W. J. Comparative Evaluation of Conventional and Resin Bolting Systems, Mining Enforcement and Safety Administration Informational Report 1033, pp. 5-10, 1976.

(40) Op. Cit., Pg. 10

(41) Op. Cit., Pg. 11-12

(42) Cochrane, T. S. and Grant, F. Pull Tests as a Measure of Roof Bolt Efficiency and of Roof Bolt Design, The Canadian Mining and Metallurgical Bulletin, pp. 877-879, December, 1963.

(43) Coal Division Committee on Roof Action. Standard Roof Bolt Anchorage Testing Procedure, Mining Congress Journal, December 1959, pp. 59-60.

(44) Dunham, R. K., Some Aspects of Resin Anchored Rock Bolting, Tunnels and Tunneling, July 1973.

(45) Simmons, W. J. Private correspondence to W. W. Lutzens, Bureau of Mines, Denver Research Center, February 2, 1987.

(46) Grout: Sophisticated Material with a Common Name, Compressed Air Magazine, August, 1986, p. 32.

(47) Miller, D. G. Polyester-Resin Anchor Creep Study, Bureau of Reclamation, Denver Engineering and Research Center, GF-80-5, June, 1980.

(48) Snyder, V. W., Gerdeen, J. C., Viegelahn, G. L. Factors Governing the Effectiveness of Roof Bolting Systems Using Fully Resin-Grouted Nontensioned Bolts, 20th Symposium on Rock Mechanics, Austin, Texas, June 4-6, 1979.

(49) Gerdeen, J. C., Snyder, V. W., Viegelahn, G. L., Praker, J. Design Criteria for Roof Bolting Plans Using Fully Resin-Grouted Nontensioned Bolts to Reinforce Bedded Mine Roof, Volume V, USBM Contract No. J0366004, Michigan Technological, July, 1977, Pg. 37.

(50) Denver Research Center, U.S. Bureau of Mines. Private Communications, April, 1987. Available upon request from J. A. Lombardi, BuMines, Denver, CO.

SELECTED ILLUSTRATIONS

In an effort to enhance the reader's understanding of conventional ground support systems, selected rock bolts and other support system types are illustrated on the following pages. Each type is shown in three modes depicting:

1) Component identification and material specifications

2) Installation and maintenance narrative

3) Force vectors and narrative describing typical installation loading and gravity loading forces along with reactions that may occur.

The values shown for material specifications are based on the types of steel normally used; however, any of the bolts, plates, or anchors can be made of special quality steels to better suit unique applications. All bolts are considered schedule 40 steel except for the slot and wedge bolt (schedule 55 steel), cable bolt (zinc-coated structural wire rope - average of class A and C), mechanically anchored, tensioned and grouted bolt (schedule 70 steel-hollow-bar RLH series) and Swellex bolt (mild steel). All plates are considered A36 steel and all mechanical type anchors are schedule 60 steel.

The plates and anchors have insignificant impact regarding coefficient of thermal expansion and ultimate tensile load, thus no values are shown as they are not applicable (N/A).

The yield and ultimate load values for bolts were obtained by multiplying the "thread stress area" of a 3/4 inch diameter bolt times their yield and ultimate strength to obtain the respective "pounds-force" load values. Yield load values for Swellex, Split-set and elliptical bolts, because of their unique anchorage mode, were obtained from the manufacturer. The yield loads shown for anchors are actual anchorage capacities derived from pull-out tests. These are somewhat general and depend largely on the rock type, hence the range of values can be quite wide.

The thermal conductivity values are shown for a temperature of 122°F (50°C). This is considered a temperature which would be commonly experienced in the medium-field areas (mains and submains) of the proposed repository sites.

All of the values listed on the parameter sheets have been determined from published data and the authors cannot guarantee the accuracy of the results. For critical applications it is recommended that pull-out and load-deformation characteristics be determined from in situ field tests on the actual rock bolts to be used.

Reference made to specific brands is made to facilitate understanding and does not imply endorsement by the Bureau of Mines.

Table 1. English To SI Units Conversion Table*

PARAMETER	ENGLISH UNITS	CONVERSION FACTOR	SI UNITS
Poissons Ratio (ν)	Dimensionless	--------	Dimensionless
Youngs Modulus (E)	1 psi	6.895	kPa
Coeff. of Thermal Thermal Exp (α)	$\frac{in/in \times 10^{-6}}{°F}$	1.8	$\frac{mm/mm \times 10^{-6}}{°C}$
Load (ϕ)	lbf	4.448	N
Thermal Conductivity (k)	BTU/HR•FT•°F at 122°F	0.01731	W/Cm•°C at 50°C

*English units values multiplied by conversion factor yields SI (Standards International) values.

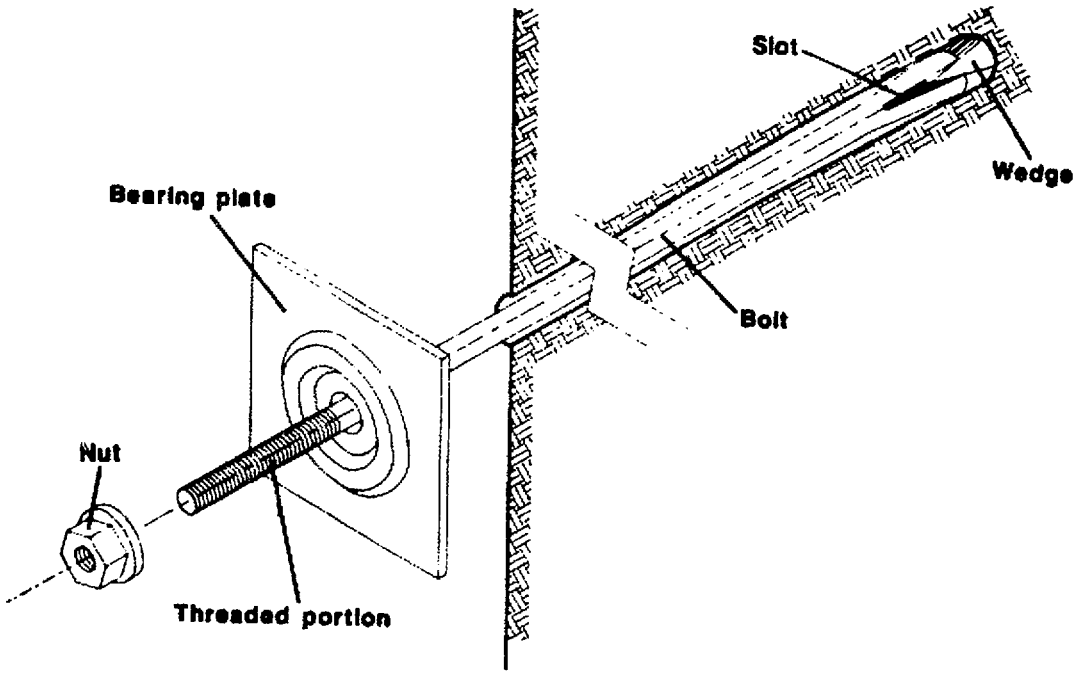

SLOT-AND-WEDGE POINT ANCHOR BOLT SET

Parameters	ASTM Test No.*	Bolt	Plate	Anchor
Poisson's Ratio (v)	Part 10 E-132	0.29	0.30	0.30
Young's Modulus (E) 10^6 psi	Part 10 E-231	29→30	29→30	29→30
Coeff. of Thermal Exp (α) $[(in/in)x10^{-6}]/°F$	Part 10 B-95	6.16	N/A	N/A
Yield Load (min) lbf - 3/4" ϕ	Part 10 E-8	18,370	N/A	16,000→ 28,000
Ultimate Tensile Load(min) lbf - 3/4" ϕ	Part 10 E-8	28,390	N/A	N/A
Thermal Conductivity (k) BTU/(HR • FT • °F) @ 122° F	Part 41 E-457	29.6	28.0	29.6

*1980 Book of ASTM Standards

Note: The values listed in this table have been determined from published test data and the authors cannot guarantee the accuracy of the results. For critical applications it is strongly recommended that pull-out and load-deformation characteristics be determined from field tests on the bolts to be used.

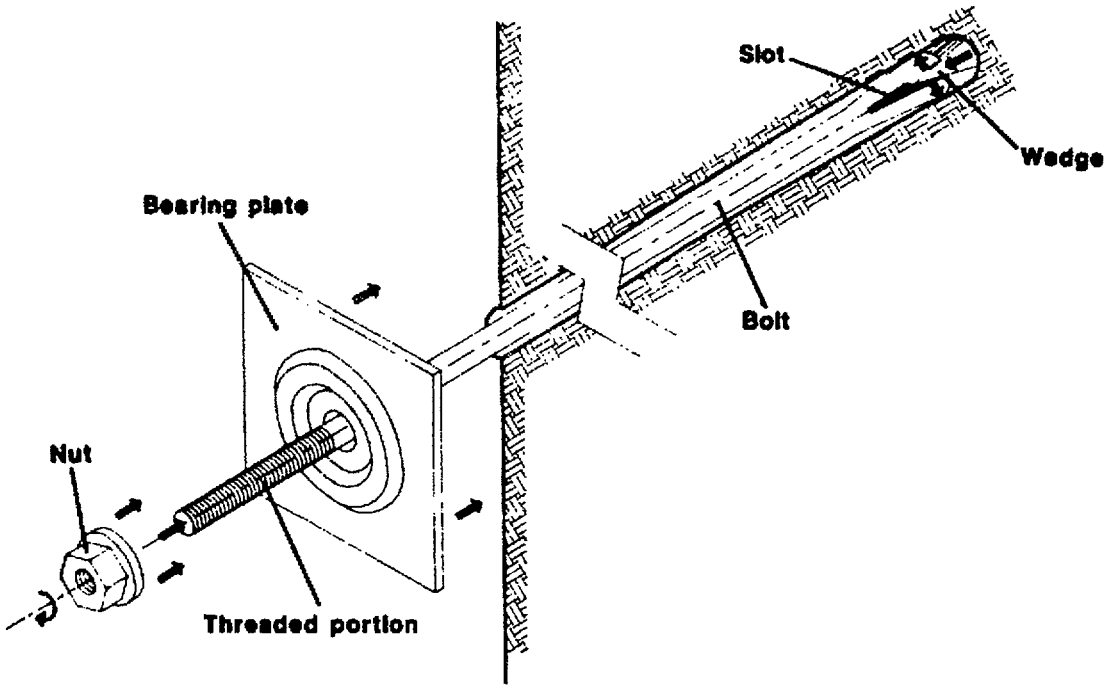

SLOT-AND-WEDGE POINT ANCHOR BOLT SET

The components of the slot-and-wedge point-anchored tensioned bolt set are shown above. The bolt is threaded at one end and has a slot cut in the other. The bolt is installed by first inserting the wedge into the bolt slot and placing an end cap on the threaded end of the bolt. The partial bolt assembly is then inserted into a bolt hole, wedge first, ensuring that the base of the wedge contacts the back of the hole. The bolt is then driven into the bottom of the hole by striking the end cap with a large hammer, forcing the wedge into the slot and expanding the sides of the bolt along the slot against the sides of the bolt hole. The end cap is then removed, the bearing plate is placed on the bolt, and the nut is installed on the bolt threads. The nut is rotated until the bearing plate is secured to the rock and the desired torque is reached. Periodic re-torquing is usually required to maintain proper bolt tension.

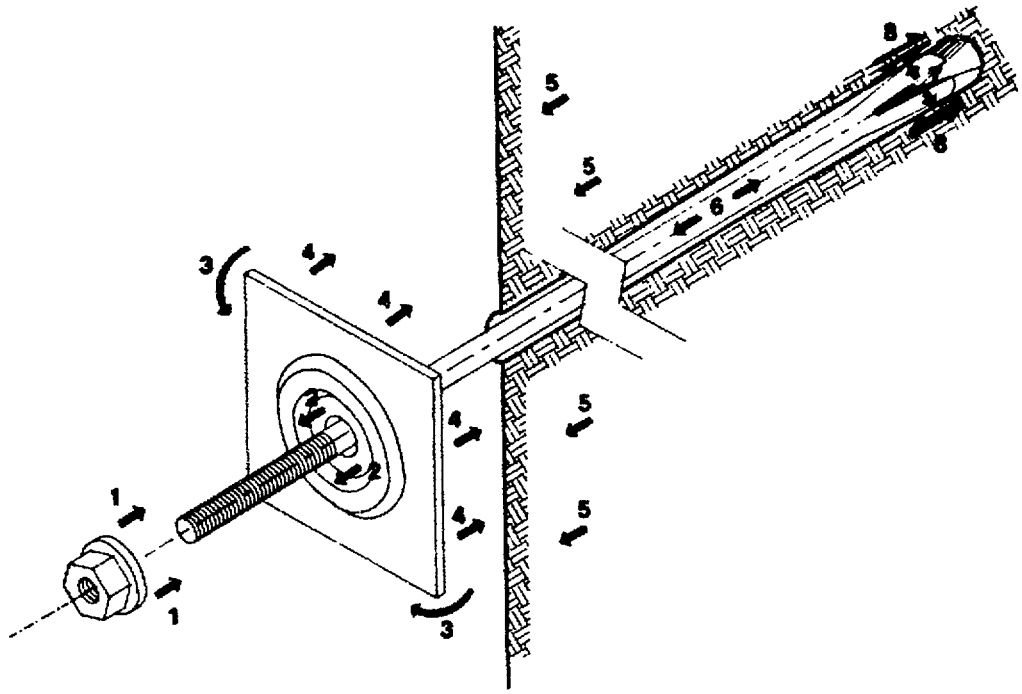

SLOT-AND-WEDGE POINT ANCHOR BOLT SET

The slot-and-wedge point anchored bolt is used for the keying, suspension, and beam building modes of rock support. The slot-and-wedge anchor system acts through the compression and shear forces (7 and 8) at the anchor point, coupled with the compression (1) of the nut to create tension (6) in the bolt. This provides a support force (4) from the bearing plate to oppose differential rock movement forces (5) at the rock face. The nut also acts (1 and 2) to hold the bearing plate firmly in place. Excessive rock flexure can cause buckling (3) of the bearing plate.

In keying, the bolt acts to prevent rotational movement by interconnecting pieces of broken rock, thereby maintaining opening stability. In suspension, the bolt anchor is secured into competent ground and supports broken rock slabs between the anchor and the face plate.

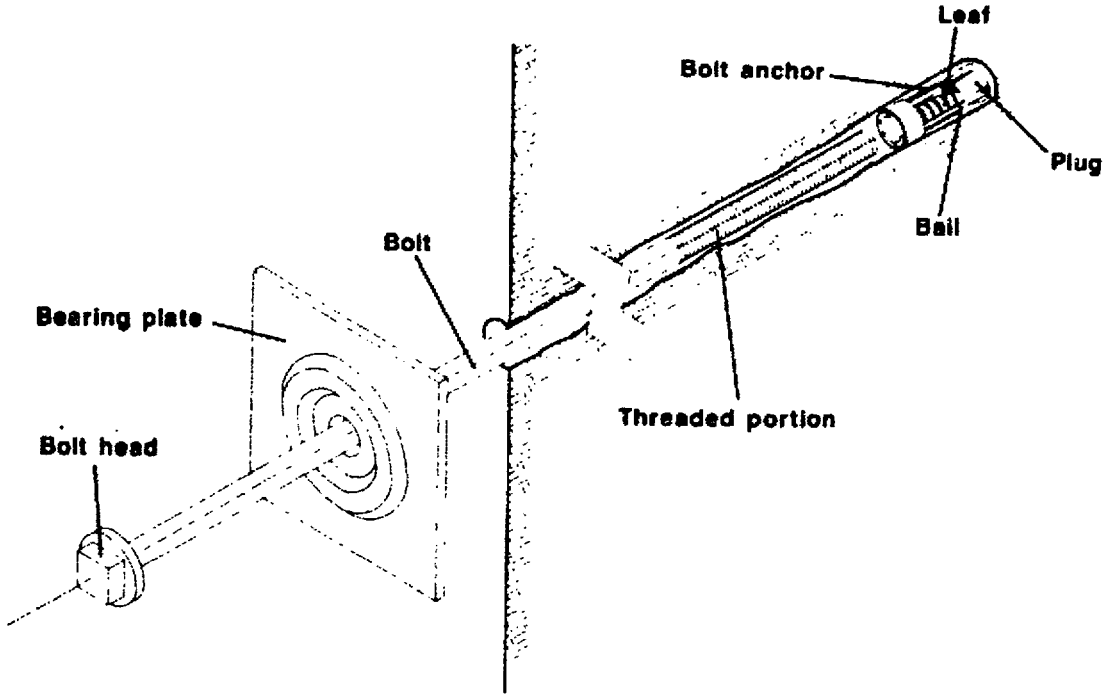

MECHANICALLY ANCHORED, TENSIONED BOLT SET

Parameters	ASTM Test No.*	Bolt	Plate	Anchor
Poisson's Ratio (v)	Part 10 E-132	0.29	0.30	0.30
Young's Modulus (E) 10^6 psi	Part 10 E-231	29→30	29→30	29→30
Coeff. of Thermal Exp (α) $[(in/in)x10^{-6}]/°F$	Part 10 B-95	6.40	N/A	N/A
Yield Load (min) lbf - 3/4" ϕ	Part 10 E-8	13,360	N/A	16,000→ 28,000
Ultimate Tensile Load(min) lbf - 3/4" ϕ	Part 10 E-8	23,380	N/A	N/A
Thermal Conductivity (k) BTU/(HR • FT • °F) @ 122° F	Part 41 E-457	29.6	28.0	27.6

*1980 Book of ASTM Standards

Note: The values listed in this table have been determined from published test data and the authors cannot guarantee the accuracy of the results. For critical applications it is strongly recommended that pull-out and load-deformation characteristics be determined from field tests on the bolts to be used.

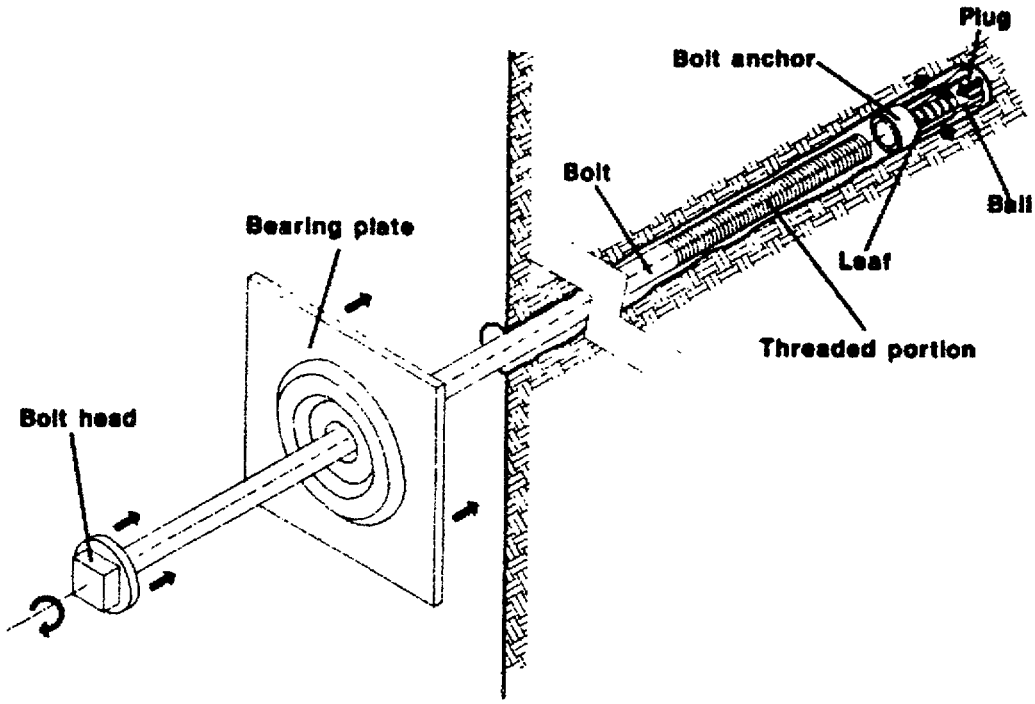

MECHANICALLY ANCHORED, TENSIONED BOLT SET

The components of the mechanically anchored, tensioned bolt set are shown above. The bolt is threaded on one end and has a square bolt head on the other. The anchor assembly consists of several leaves that are forced radially outward when the anchor plug is drawn into the anchor assembly. The bail serves no function except to hold the anchor plug in place in the anchor assembly until it is placed onto the bolt threads. The bolt is installed by first sliding a bearing plate over the bolt shank to the bolt head, then attaching the bolt anchor to the threaded end of the bolt. The assembly is then fully inserted into the hole, ensuring that the face plate is against the bolt hole collar. The bolt is then rotated, forcing the bolt anchor plug into the anchor body to expand the leaves against the sides of the bolt hole. This also tensions the bolt and secures the bearing plate to the rock. Periodic retorquing is usually required to maintain proper bolt tension.

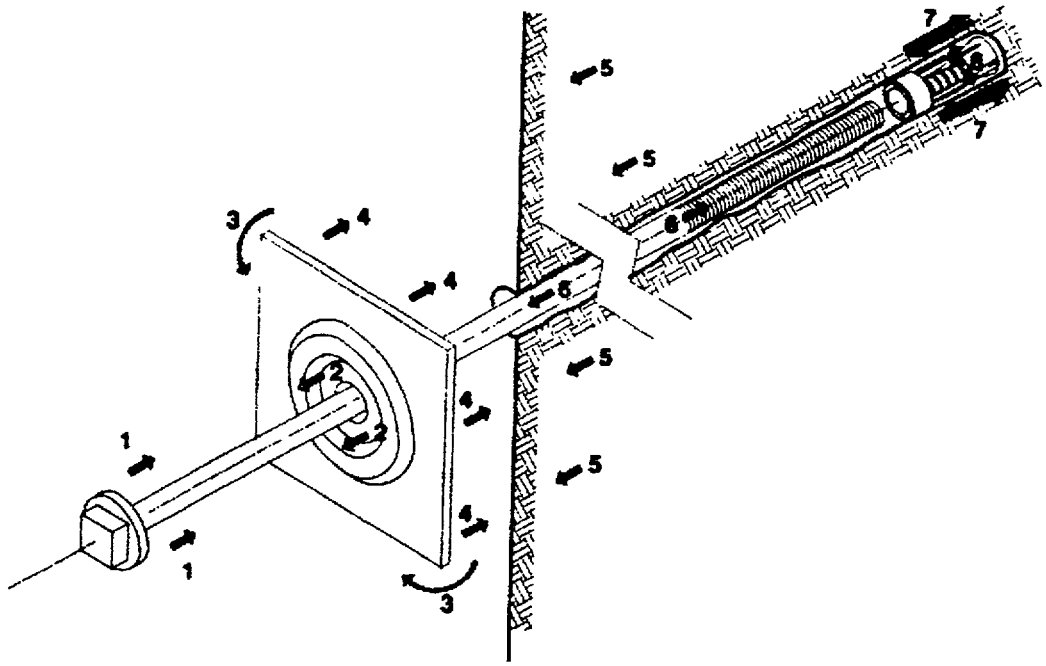

MECHANICALLY ANCHORED, TENSIONED BOLT SET

The mechanically anchored tensioned bolt is used for keying, suspension, and beam building modes of rock support. After torquing the bolt, the anchor, acting through the compression and shear forces (7 and 8) at the anchor point, couple with the compression (1) of the bolt head to create tension (6) in the bolt. This provides a force (4) from the bearing plate to oppose differential rock movement (5) at the rock face. The bolt head also acts (1 and 2) to hold the bearing plate firmly in place. Excessive rock movement may cause buckling (3) of the bearing plate.

In keying, the bolt acts to prevent rotational movement of interlocking pieces of broken ground thereby maintaining opening stability. In suspension, the bolt anchor is secured into competent rock and supports broken rock slabs between the anchor and the bearing plate.

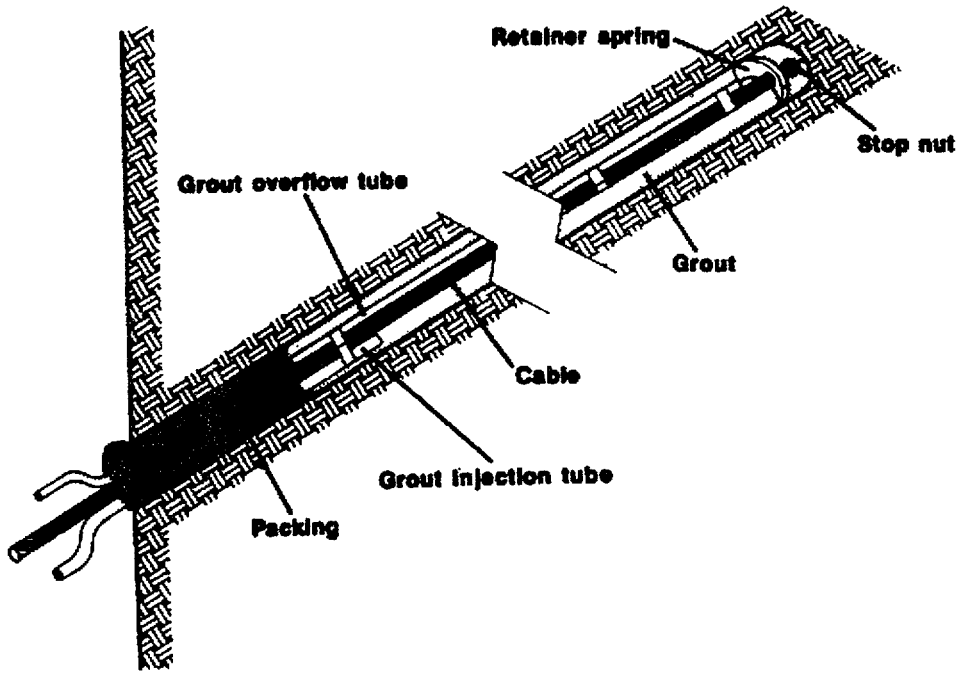

CABLE BOLT SET

Parameters	ASTM Test No.*	Bolt	Plate	Anchor
Poisson's Ratio (v)	Part 10 E-132	0.29	0.30	N/A
Young's Modulus (E) 10^6 psi	Part 10 E-231	29→30	29→30	N/A
Coeff. of Thermal Exp (α) $[(in/in)x10^{-6}]/°F$	Part 10 B-95	6.40	N/A	N/A
Yield Load (min) lbf - 3/4" ϕ	Part 10 E-8	18,400	N/A	30,000→ 40,000
Ultimate Tensile Load(min) lbf - 3/4" ϕ	Part 10 E-8	25,000	N/A	N/A
Thermal Conductivity (k) BTU/(HR • FT • °F) @ 122° F	Part 41 E-457	29.6	28.0	N/A

*1980 Book of ASTM Standards

Note: The values listed in this table have been determined from published test data and the authors cannot guarantee the accuracy of the results. For critical applications it is strongly recommended that pull-out and load-deformation characteristics be determined from field tests on the bolts to be used.

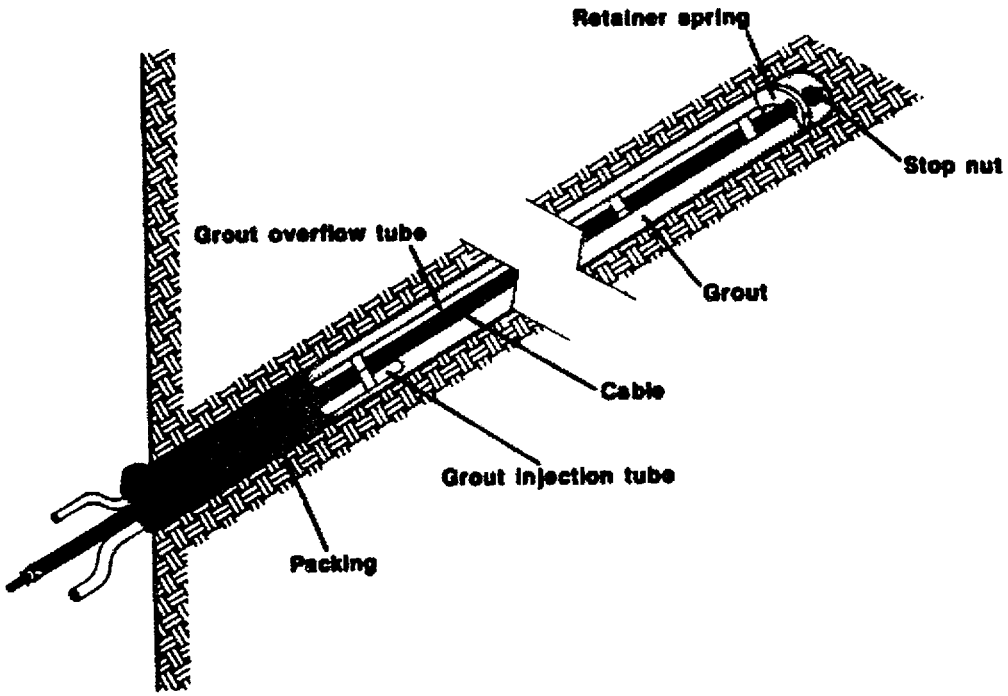

CABLE BOLT SET

The cable bolt consists of a length of 5/8" or larger steel cable (wire rope) with a retainer spring at the end secured by a stop nut. A 3/4" ID grout injection (inlet) tube and a 1/2" ID overflow (outlet) tube are strapped to the cable.

The outlet tube is secured to the cable at intervals along the length of cable to be inserted in the hole, so that one end of the tube is near the retainer on the cable. The cable is then inserted into the hole (usually drilled to about 2 1/4" diameter) retainer end first until the end of the cable contacts the back of the hole. Packing material, such as cotton waste, is tightly fitted into the hole around the cable and tubes at the collar. Cement grout is then pumped into the injection tube until the void around the cable is filled, and air and grout are forced out of the overflow tube. If the drill hole is downward from the horizontal, grout is injected into the "overflow" tube, filling the drill hole void from the bottom up, forcing air out through the "injection" tube. Grout injection continues until grout is forced out of the "injection" tube.

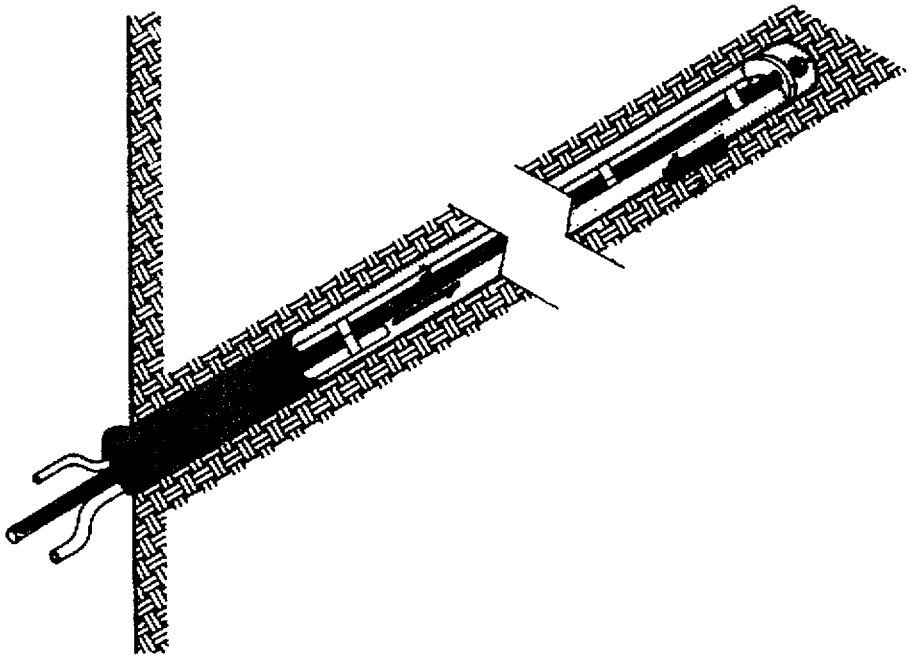

CABLE BOLT SET

The cable bolt supports the rock in essentially the same manner as the fully grouted untensioned bolt, acting in the beam-building and suspension modes of rock reinforcement. Forces along the length of the cable are resisted by the shear strengths of the grout, grout-rock (3), and grout-cable (2) bonds and the tensile strength of the cable. Differential rock movement may cause tension (1) in the cable. No maintenance is necessary other than periodic inspection.

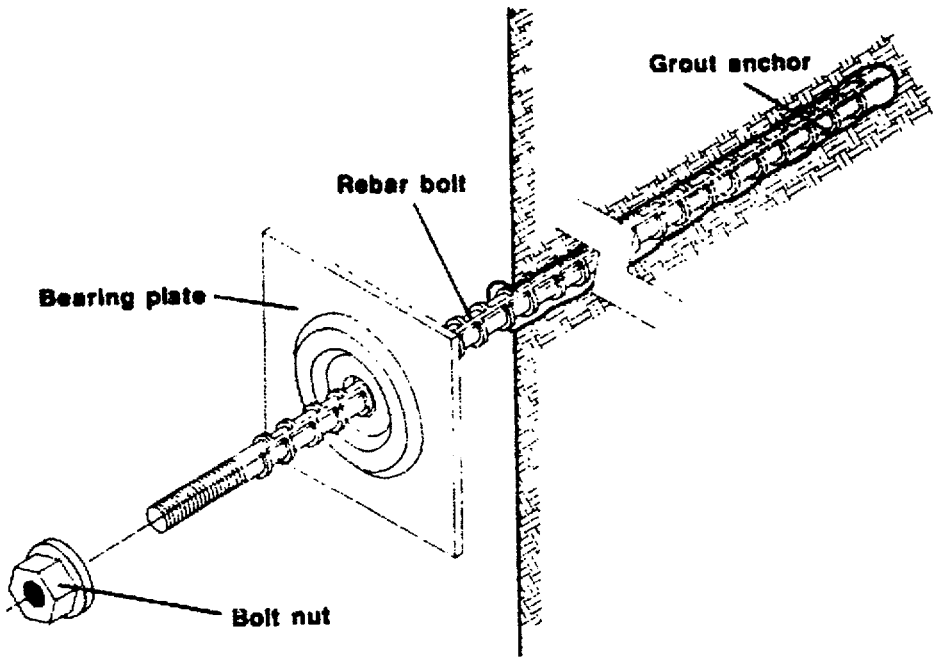

GROUT ANCHORED, TENSIONED BOLT SET

Parameters	ASTM Test No.*	Bolt	Plate	Anchor
Poisson's Ratio (v)	Part 10 E-132	0.29	0.30	N/A
Young's Modulus (E) 10^6 psi	Part 10 E-231	29→30	29→30	N/A
Coeff. of Thermal Exp (α) $[(in/in)x10^{-6}]/°F$	Part 10 B-95	6.40	N/A	N/A
Yield Load (min) lbf - 3/4" ϕ	Part 10 E-8	13,360	N/A	30,000→ 40,000
Ultimate Tensile Load(min) lbf - 3/4" ϕ	Part 10 E-8	23,380	N/A	N/A
Thermal Conductivity (k) BTU/(HR • FT • °F) @ 122° F	Part 41 E-457	29.6	28.0	N/A

*1980 Book of ASTM Standards

Note: The values listed in this table have been determined from published test data and the authors cannot guarantee the accuracy of the results. For critical applications it is strongly recommended that pull-out and load-deformation characteristics be determined from field tests on the bolts to be used.

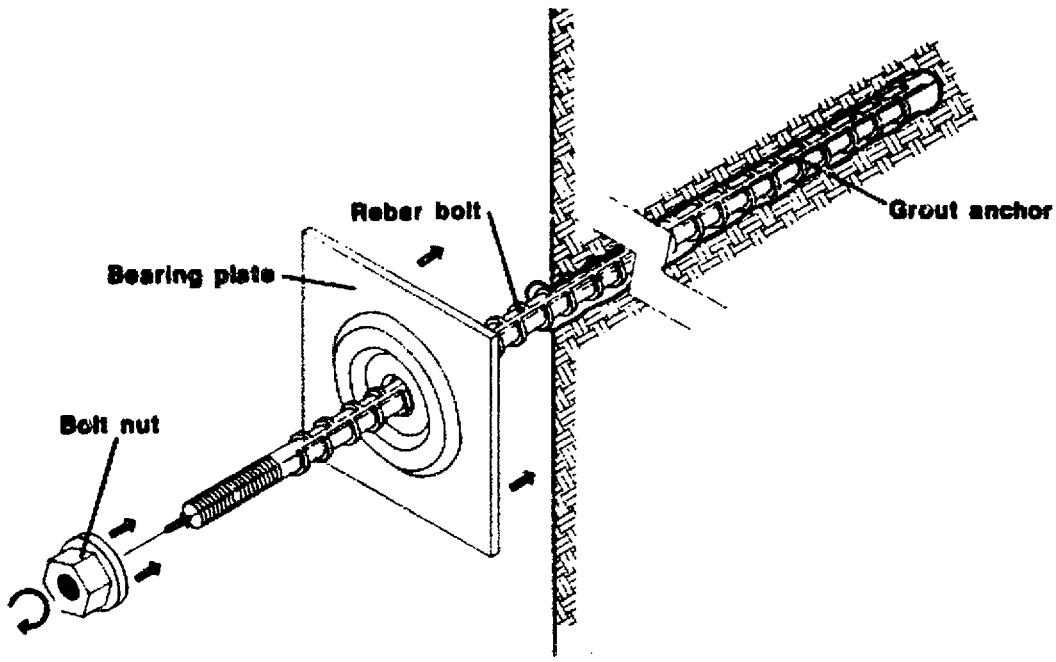

GROUT-ANCHORED TENSIONED BOLT SET

The components of the grout-anchored tensioned bolt set are shown above. The grout is encapsulated in cartridges and may be either dry cement, dry cement containing small capsules of water, or chemical resin. The dry-cement-only cartridges have a porous cloth or fibrous paper casing, and are saturated with water before use. The same general installation procedures are followed for all three grout types. The nut and bearing plate are placed on the bolt. The grout cartridge is inserted into the hole and pushed to the back of the hole by the bolt until the cartridge is ruptured. The bolt is then rotated to shred the cartridge casing, and, in the case of chemical resin, to mix the components of the resin. The bolt is then adjusted in the hole so that the bearing plate is held flush against the rock at the hole collar. After the resin is allowed to set, the nut is rotated to the desired amount of torque. Maintenance consists of periodic re-torquing of the nut.

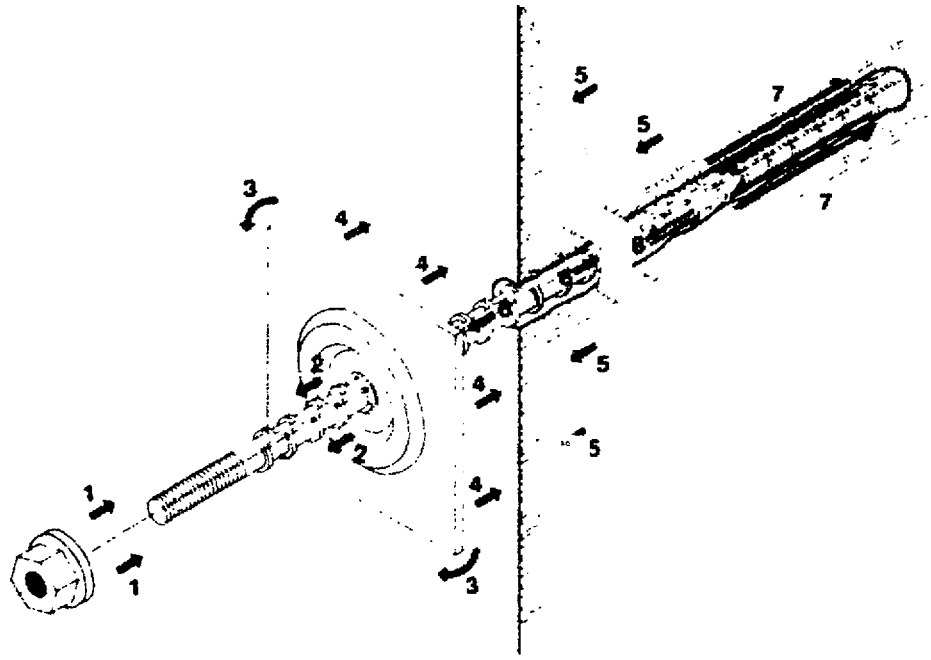

GROUT ANCHORED TENSIONED BOLT SET

The grout-anchored tensioned bolt is used for keying, suspension, and beam building modes of rock support. After torquing, the bolt acts through the shear forces (7 and 8) at the anchor area coupled with the compression resistance of the bolt nut to create tension (6) in the bolt. This provides a force (4) at the bearing plate to oppose differential rock movement forces (5) on the rock face. The bolt nut also acts (1 and 2) to hold the bearing plate firmly in place. Excessive rock movement may cause buckling (3) of the bearing plate.

In keying, the bolt acts to prevent rotational movement of interlocking pieces of broken ground, thereby maintaining opening stability by formation of an arch. In suspension, the bolt anchor is secured into competent rock and supports rock slabs between the anchor and the bearing plate.

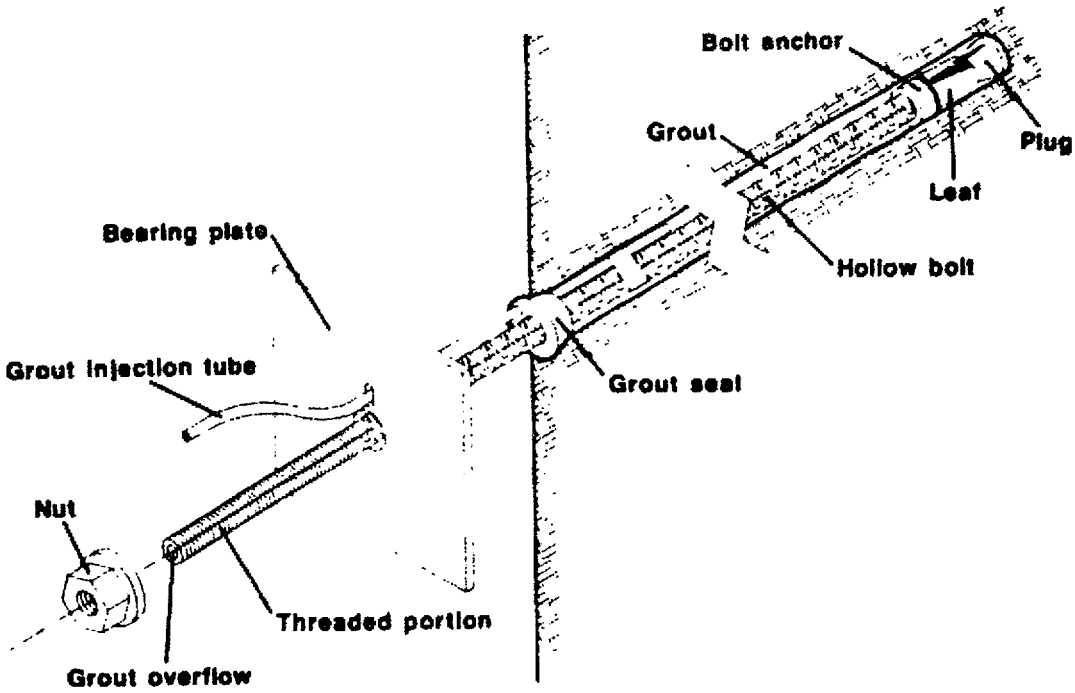

MECHANICALLY ANCHORED, TENSIONED AND GROUTED BOLT SET

Parameters	ASTM Test No.*	Bolt	Plate	Anchor
Poisson's Ratio (v)	Part 10 E-132	0.30	0.30	.30
Young's Modulus (E) 10^6 psi	Part 10 E-231	29→30	29→30	29→30
Coeff. of Thermal Exp (α) $[(in/in)x10^{-6}]/°F$	Part 10 B-95	6.10	N/A	N/A
Yield Load (min) lbf - 3/4" ϕ	Part 10 E-8	23,380	N/A	50,000→ 70,000
Ultimate Tensile Load(min) lbf - 3/4" ϕ	Part 10 E-8	30,728	N/A	N/A
Thermal Conductivity (k) BTU/(HR • FT • °F) @ 122° F	Part 41 E-457	27.7	28.0	27.6

*1980 Book of ASTM Standards

Note The values listed in this table have been determined from published test data and the authors cannot guarantee the accuracy of the results. For critical applications it is strongly recommended that pull-out and load deformation characteristics be determined from field tests on the bolts to be used.

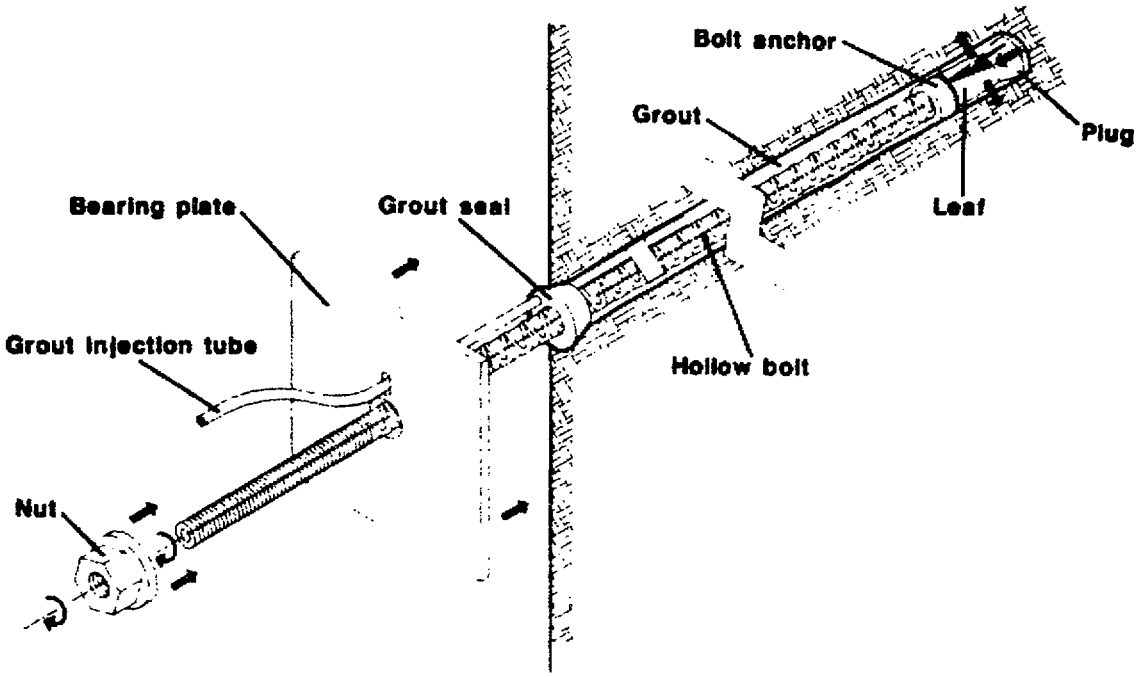

MECHANICALLY ANCHORED, TENSIONED, AND GROUTED BOLT SET

The components of the mechanically anchored, tensioned, and grouted bolt set are shown above. The hollow rebar bolt is threaded at both ends. The bolt is installed by first attaching the bolt anchor to one threaded end of the bolt and fastening a setting tool, such as a long double cap nut, to the other threaded end. The partial bolt assembly is then inserted into the drilled hole, anchor end first. The setting tool and bolt are then rotated, drawing the anchor plug into the anchor assembly, forcing the leaves radially outward against the sides of the hole, thus anchoring the bolt. The setting tool is then removed, the rubber grout seal with attached grout injection tube is placed on the bolt and tightly fit into the hole collar, and the bearing plate and nut are installed on the bolt. The nut is then rotated, securing the bearing plate to the rock, until the desired torque is attained. Cement grout is then pumped into the grout injection tube, forcing the air in the drill hole out through the center hole of the bolt. Grout injection continues until a steady stream of grout overflows from the bolt hole, thus insuring that the drill hole void and any rock fractures along the walls of the hole have been filled with grout. The grout is then allowed to set. No maintenance other than period inspection is possible.

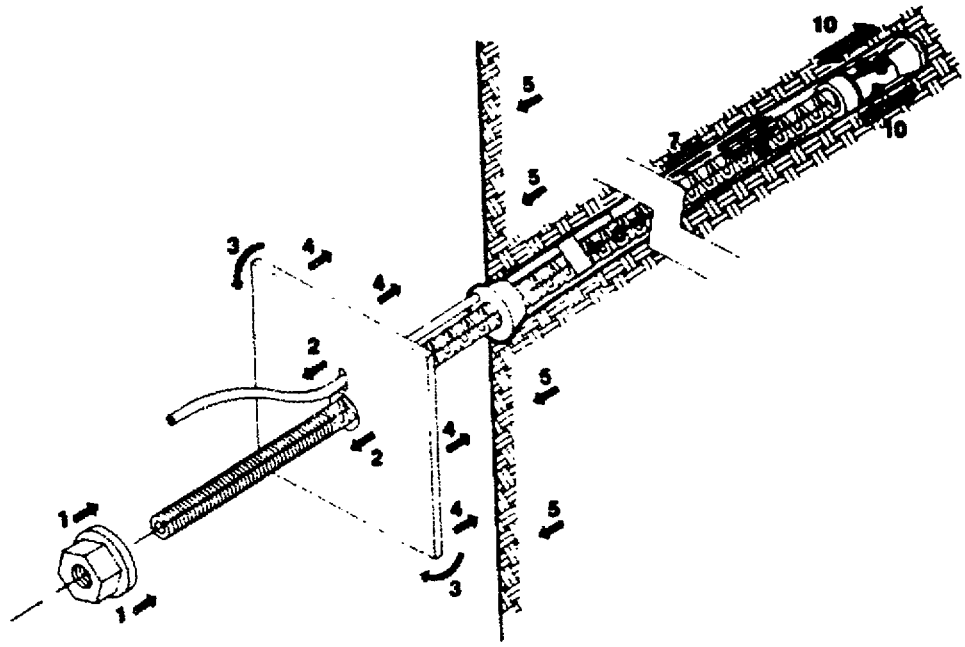

MECHANICALLY ANCHORED, TENSIONED, AND GROUTED BOLT SET

The mechanically anchored tensioned and grouted bolt is used for the keying, suspension, and beam-building modes of rock support. The bolt, after torquing, acts through the compression (9) and shear (10) forces at the anchor point, coupled with the resistance (1) of the nut to create pre-grouted tension (6) in the bolt. This provides a resisting force (4) from the bearing plate to oppose differential rock movement forces (5) at the rock face. The nut also acts (1 and 2) to hold the bearing plate firmly in place. The shear strength of the grout-rock (7) and grout-bolt (8) bonding resists differential rock movement along the length of the bolt. Excessive rock movement may cause buckling (3) of the bearing plate.

In keying, the bolt acts to prevent rotational movement of interlocking pieces of broken rock, thereby maintaining opening stability. In suspension, the bolt anchor is secured into competent ground and supports rock slabs between the anchor and the bearing plate. In beam-building, the grouted bolt unites the separate laminar rock members within the bolt length into a competent unit.

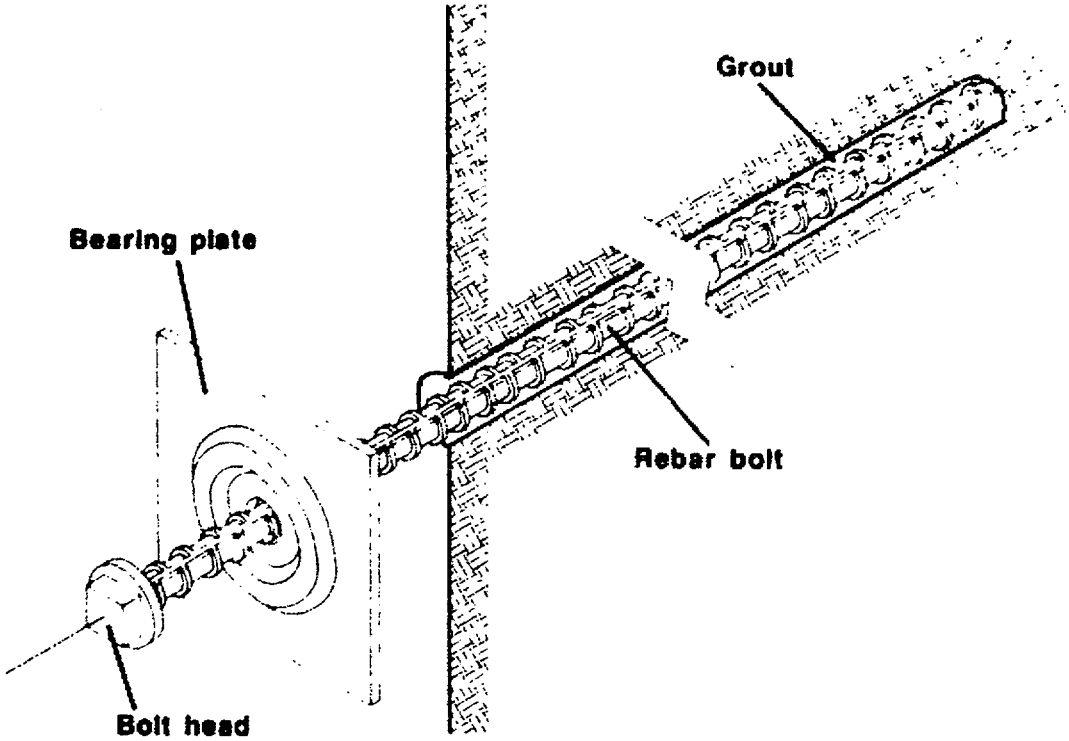

FULLY GROUTED, UNTENSIONED BOLT SET

Parameters	ASTM Test No.*	Bolt	Plate	Anchor
Poisson's Ratio (v)	Part 10 E-132	0.29	0.30	N/A
Young's Modulus (E) 10^6 psi	Part 10 E-231	29→30	29→30	N/A
Coeff. of Thermal Exp (α) $[(in/in)x10^{-6}]/°F$	Part 10 B-95	6.40	N/A	N/A
Yield Load (min) lbf - 3/4" ϕ	Part 10 E-8	13,360	N/A	31,000
Ultimate Tensile Load(min) lbf - 3/4" ϕ	Part 10 E-8	23,380	N/A	N/A
Thermal Conductivity (k) BTU/(HR • FT • °F) @ 122° F	Part 41 E-457	29.6	28.0	N/A

*1980 Book of ASTM Standards

Note: The values listed in this table have been determined from published test data and the authors cannot guarantee the accuracy of the results. For critical applications it is strongly recommended that pull-out and load-deformation characteristics be determined from field tests on the bolts to be used.

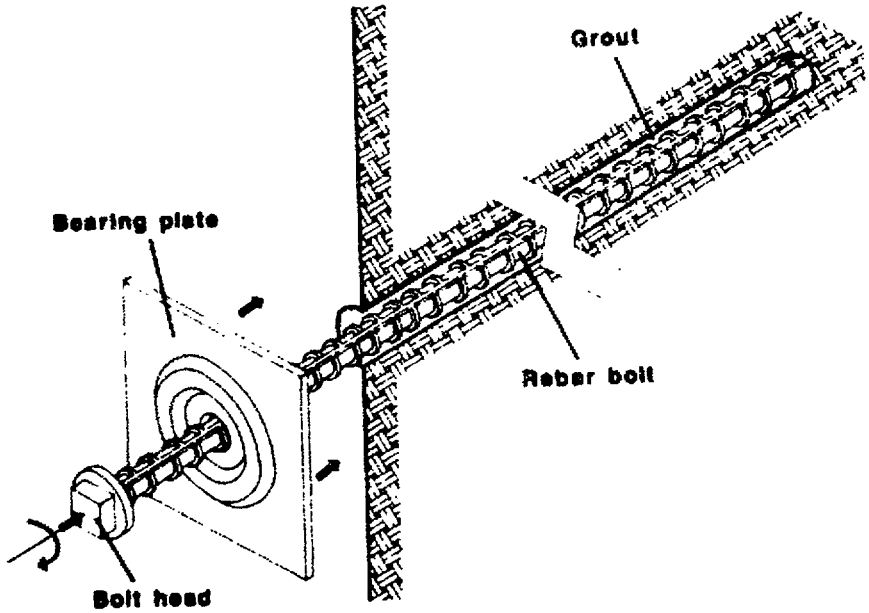

FULLY GROUTED UNTENSIONED BOLT SET

The components of the resin grouted untensioned bolt set are shown above. The bolt is usually constructed of rebar to provide maximum resin contact surface area along its length. The grout is typically composed of a two-part polyester resin that cures very rapidly. The bolt is installed by first inserting the required number of resin grout cartridges into the bolt hole, then inserting the bolt and bearing plate assembled as shown. The bolt is rotated rapidly, mixing the resin grout components and ensuring that a maximum bolt surface area is being grouted. The grout then cures, bonding the bolt to the rock. No maintenance other than periodic inspection is possible.

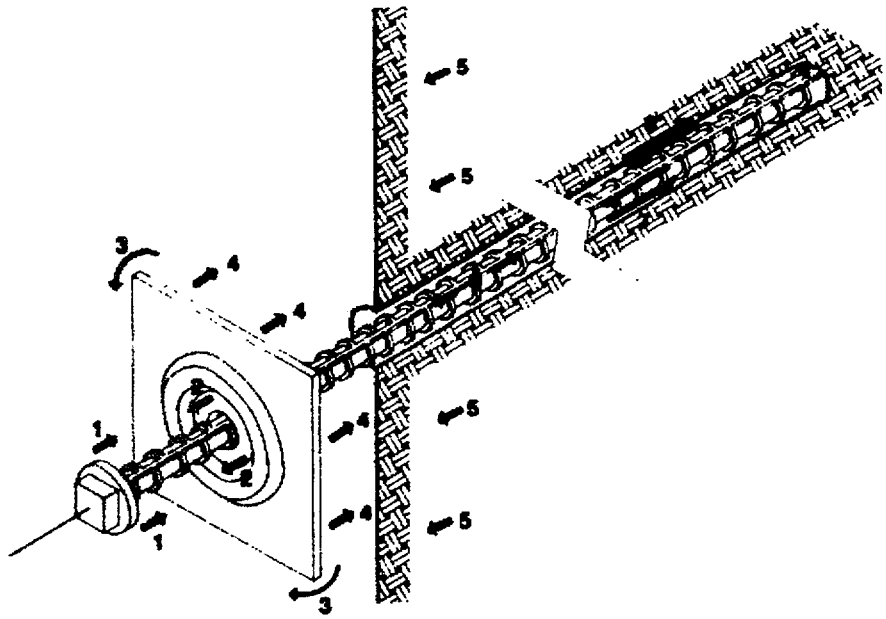

FULLY GROUTED UNTENSIONED BOLT SET

This bolt is normally used in the beam building mode of support. Fully grouted untensioned bolts bond separate laminar rock layers into a single support unit with a thickness equal to the grouted bolt length. Forces caused by differential rock movements along the length of the bolt are resisted by the shear strength of the bolt-grout interface (7) and the grout-rock interface (8). Differential rock movement forces (5) at the rock face are resisted by the bearing plate (4) acting against (2) the bolt head (1). This will create a tension (6) in the bolt. Excessive rock movement may cause buckling (3) of the bearing plate.

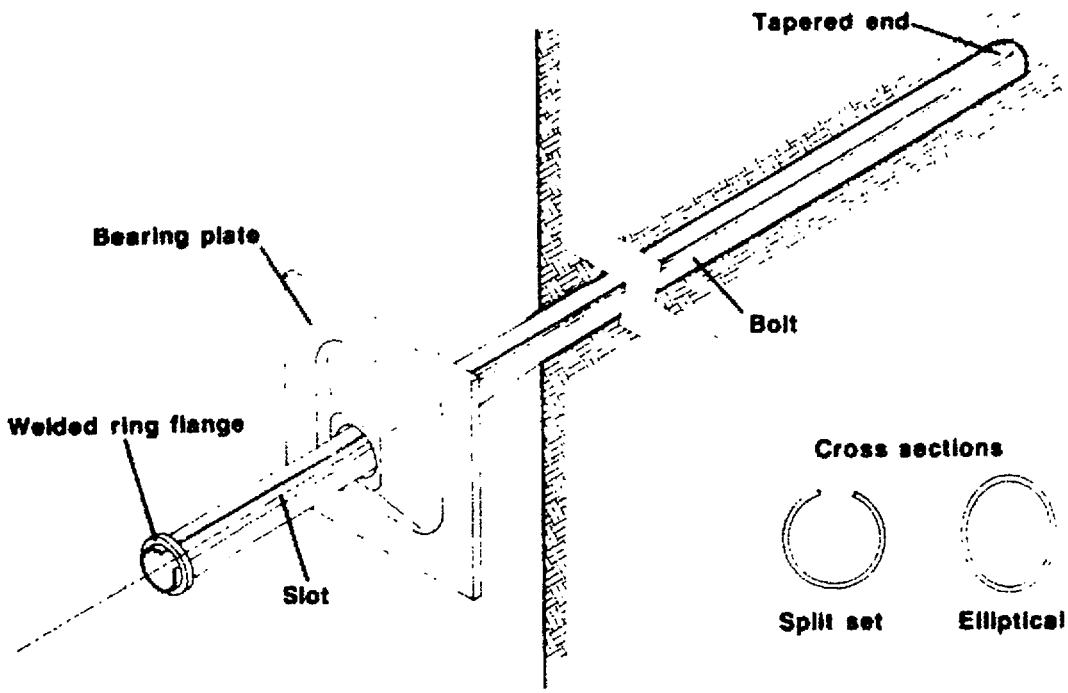

SPLIT-SET BOLT AND ELLIPTICAL BOLT SETS

Parameters	ASTM Test No.*	Bolt	Plate	Anchor
Poisson's Ratio (v)	Part 10 E-132	0.30	0.30	N/A
Young's Modulus (E) 10^6 psi	Part 10 E-231	29→30	29→30	N/A
Coeff. of Thermal Exp (α) $[(in/in)x10^{-6}]/°F$	Part 10 B-95	6.16	N/A	N/A
Yield Load (min) lbf	Part 10 E-8	25,000	N/A	15,000
Ultimate Tensile Load(min) lbf	Part 10 E-8	28,000	N/A	N/A
Thermal Conductivity (k) BTU/(HR • FT • °F) @ 122° F	Part 41 E-457	29.6	28.0	N/A

*1980 Book of ASTM Standards

Note: The values listed in this table have been determined from published test data and the authors cannot guarantee the accuracy of the results. For critical applications it is strongly recommended that pull-out and load-deformation characteristics be determined from field tests on the bolts to be used.

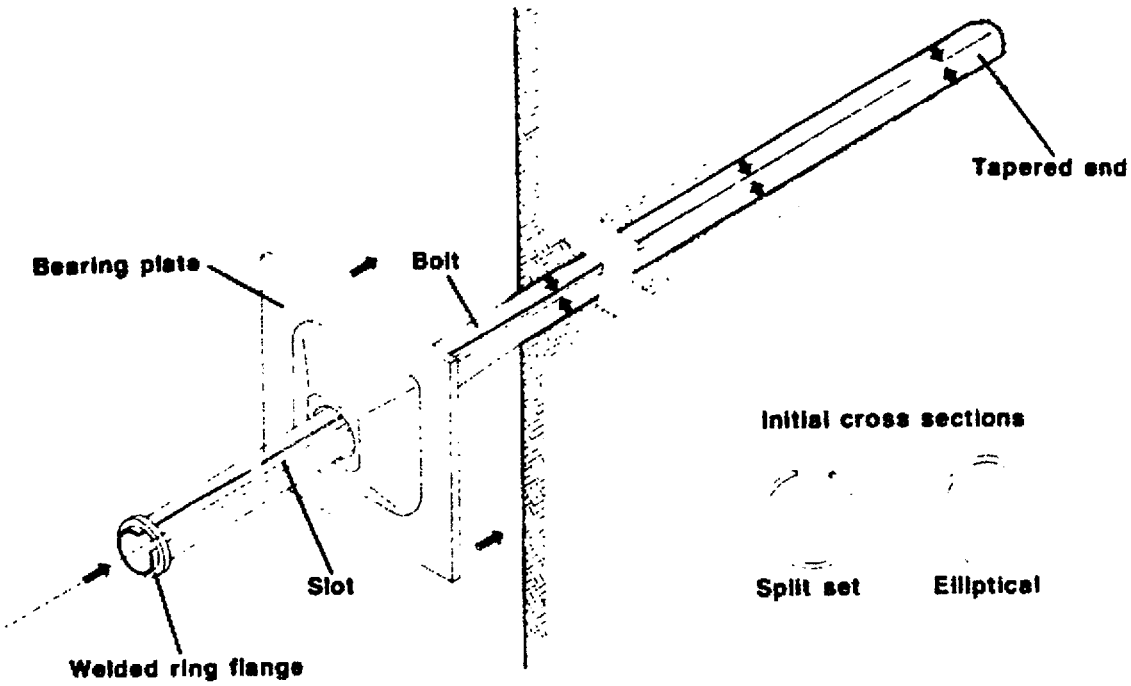

SPLIT-SET BOLT AND ELLIPTICAL BOLT SETS

The Split-set bolt, a full-length-slotted round steel tube, and the elliptical bolt, an oval steel tube, are both tapered at one end and have a ring flange welded to the other end.

Split-set and elliptical bolts are both installed in the following manner: the bearing plate is placed on the bolt. The bolt is then inserted into the undersized drill hole, tapered end first, and driven into the hole with a percussion driver until the bearing plate is tight against the rock at the hole collar. Nominal hole diameter for both bolt types is 1-3/8 in, and minimum hole length is the bolt length. Neither type requires any maintenance other than periodic inspections.

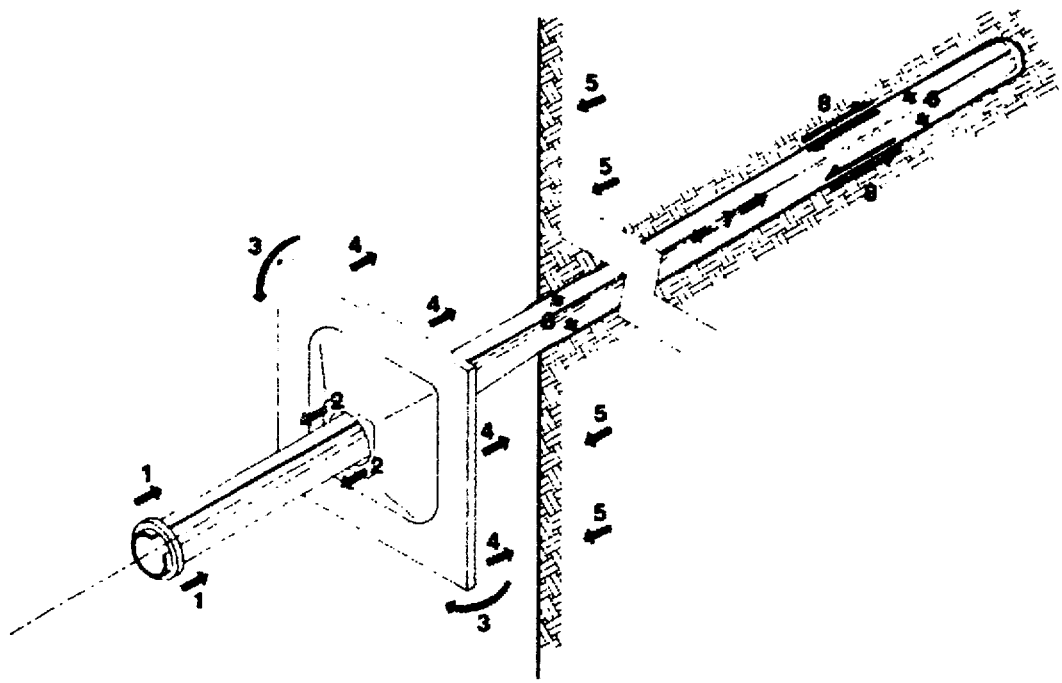

SPLIT-SET BOLT AND ELLIPTICAL BOLT SETS

A Split-set bolt is designed slightly larger in diameter than the manufacturer specified hole diameter in which it is to be installed. When the bolt is driven into the hole, the mild steel bolt is radially compressed, narrowing the slot. The bolt then presses radially against the walls (6) of the hole along its full length from the hole collar to the bolt taper. The elliptical bolt's major axis is slightly larger than the hole diameter. As it is driven into the hole, the bolt yields, shortening the major axis and lengthening the minor axis until they both equal the hole diameter, causing the bolt to exert a radial force (6) against the walls of the hole. For both bolt types, forces along the axis of the hole are resisted by friction (8) between the bolt and the rock. Differential rock movement forces (5) at the rock face are resisted by the bearing plate (4) acting through the ring flange (1 and 2) and together create tension (6) in the bolt. Excessive rock movement may cause buckling (3) of the bearing plate, or shearing at the ringed flange.

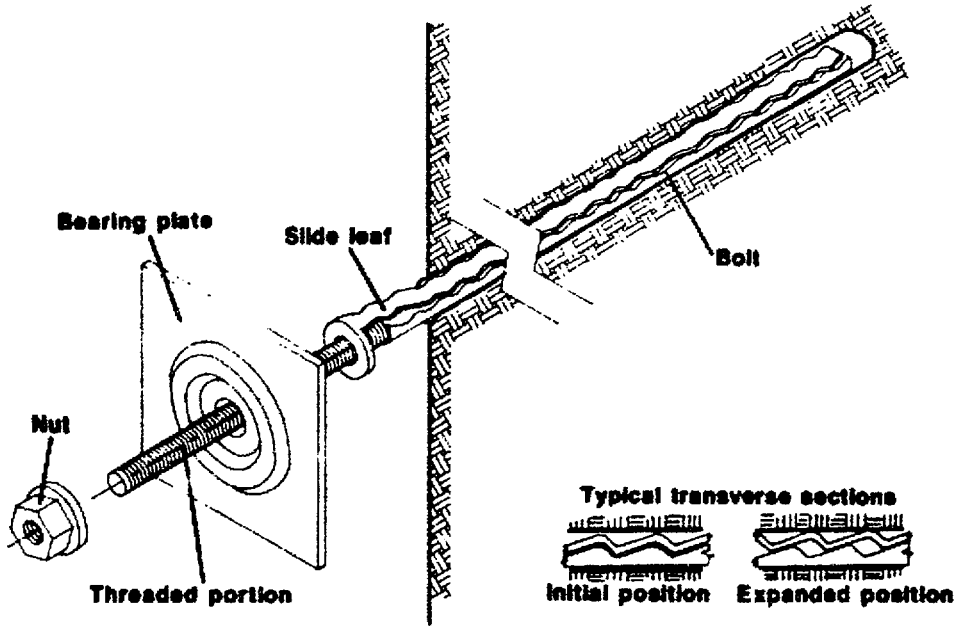

FULL-LENGTH MECHANICALLY ANCHORED BOLT SET

Parameters	ASTM Test No.*	Bolt	Plate	Anchor
Poisson's Ratio (v)	Part 10 E-132	0.29	0.30	N/A
Young's Modulus (E) 10^6 psi	Part 10 E-231	29→30	29→30	N/A
Coeff. of Thermal Exp (α) $[(in/in)x10^{-6}]/°F$	Part 10 B-95	6.20	N/A	N/A
Yield Load (min) lbf	Part 10 E-8	20,000	N/A	20,000→ 30,000
Ultimate Tensile Load(min) lbf - 3/4" ϕ	Part 10 E-8	25,500	N/A	N/A
Thermal Conductivity (k) BTU/(HR • FT • °F) @ 122° F	Part 41 E-457	29.6	28.0	N/A

*1980 Book of ASTM Standards

Note: The values listed in this table have been determined from published test data and the authors cannot guarantee the accuracy of the results. For critical applications it is strongly recommended that pull-out and load-deformation characteristics be determined from field tests on the bolts to be used.

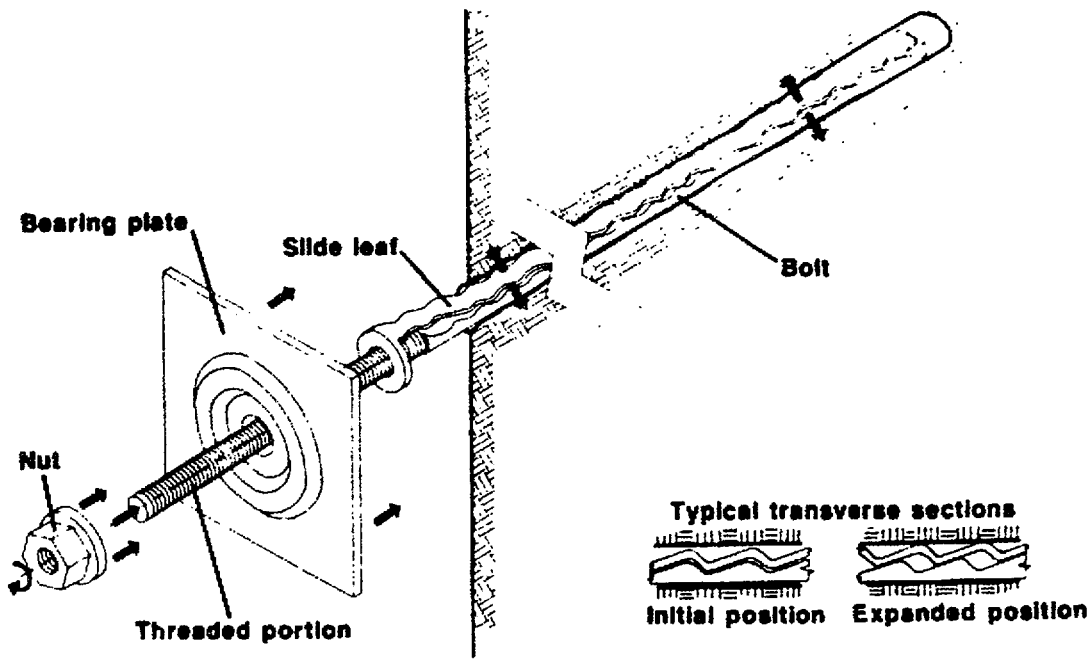

FULL-LENGTH MECHANICALLY ANCHORED BOLT SET

The bolt assembly shown above is inserted into the drill hole in the initial position shown in the transverse sections, ensuring that the bearing plate contacts the drill hole collar. The nut is then rotated, displacing the bolt body outward relative to the fixed slide leaf and forcing the bolt assembly into the expanded position as shown in the section labeled "expanded position." Periodic re-torquing may be required to maintain the bolt set in the expanded position. Because of its mechanical features, this bolt type can be removed for re-use.

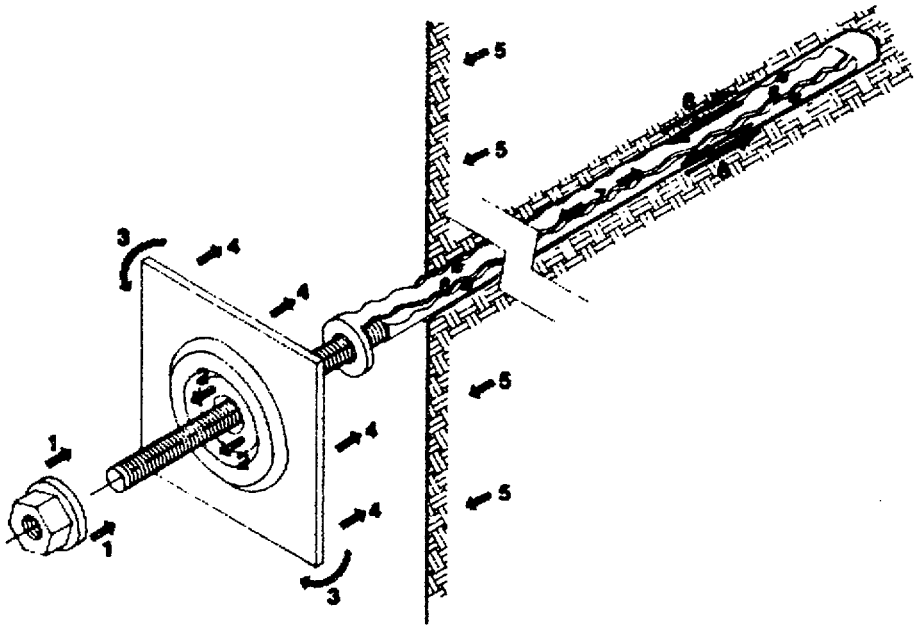

FULL-LENGTH MECHANICALLY ANCHORED BOLT SET

The full-length mechanically anchored bolt acts in the beam building mode of rock support. Forces due to differential rock movement along the length of the bolt are resisted by friction forces (8) between the bolt set and hole wall created by the expansion (6). Additional forces of loose rock movement (5) near the collar of the hole are resisted by the bearing plate (4) acting through the nut (1 and 2) which can increase tension (7) in the bolt. Excessive rock movement may cause buckling (3) of the bearing plate.

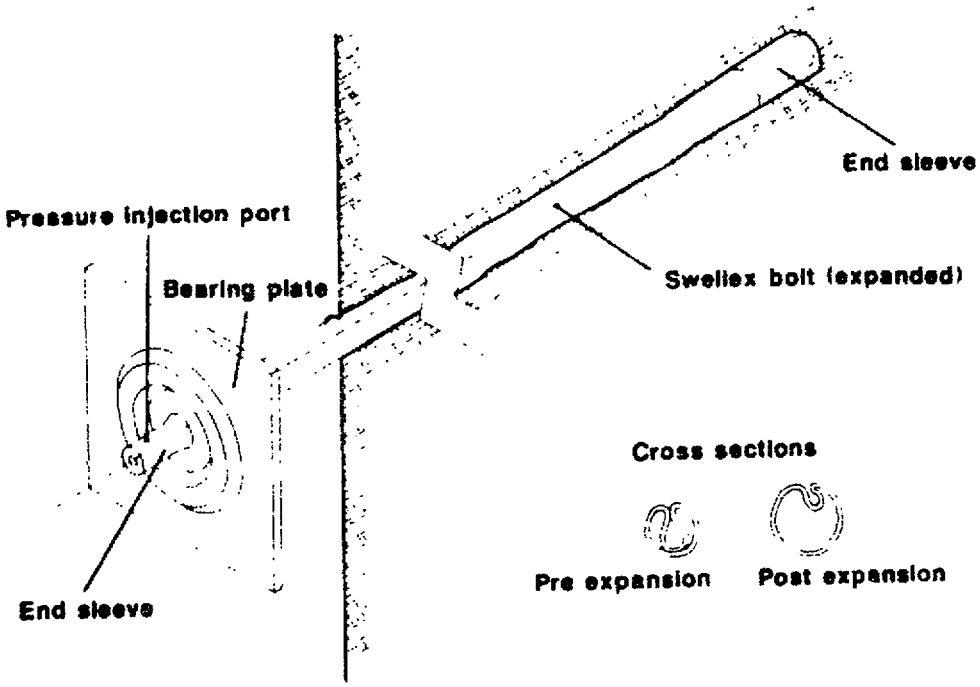

INFLATABLE SWELLEX BOLT SET

Parameters	ASTM Test No.*	Bolt	Plate	Anchor
Poisson's Ratio (v)	Part 10 E-132	0.30	0.30	N/A
Young's Modulus (E) 10^6 psi	Part 10 E-231	29→30	29→30	N/A
Coeff. of Thermal Exp (α) $[(in/in)x10^{-6}]/°F$	Part 10 B-95	7.20	N/A	N/A
Yield Load (min) lbf	Part 10 E-8	21,000	N/A	26,852
Ultimate Tensile Load(min) lbf	Part 10 E-8	25,000	N/A	N/A
Thermal Conductivity (k) BTU/(HR • FT • °F) @ 122° F	Part 41 E-457	28.5	28.0	N/A

*1980 Book of ASTM Standards

Note. The values listed in this table have been determined from published test data and the authors cannot guarantee the accuracy of the results. For critical applications it is strongly recommended that pull-out and load-deformation characteristics be determined from field tests on the bolts to be used.

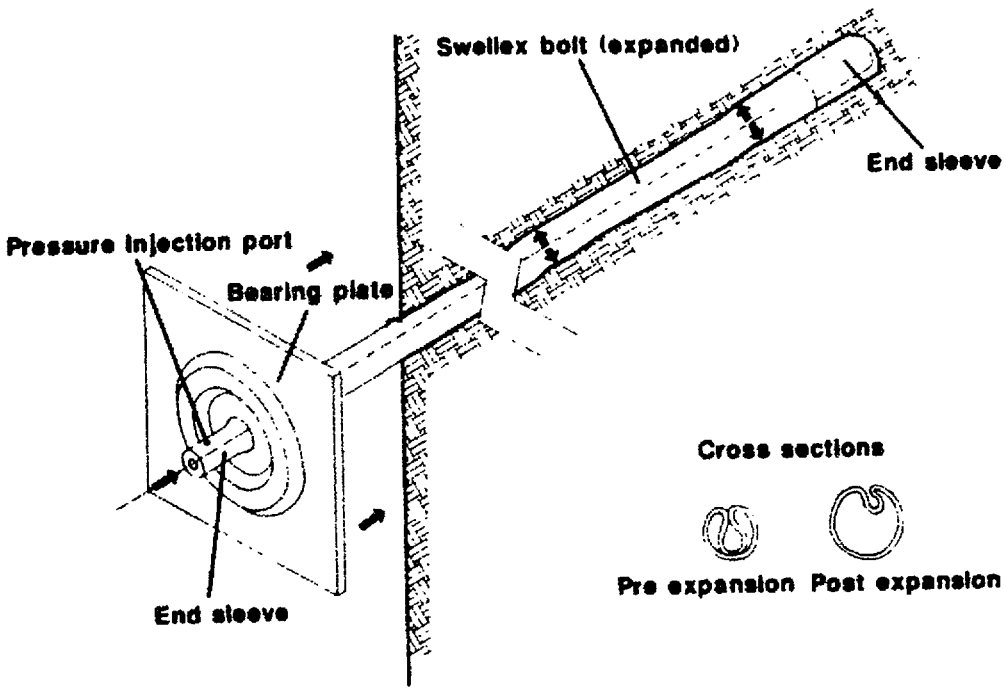

INFLATABLE (SWELLEX) BOLT SET

The components of the inflatable bolt system are shown above. The bolt is constructed of a flattened, and then folded circular, length of steel tubing as shown in the pre-expansion cross section. The inner end of the bolt is sealed and fitted with an end sleeve while the outer end is sealed and fitted with a flanged end sleeve that also contains the water injection port. The flange serves to secure the face plate on the bolt.

The bolt is installed by first sliding a face plate over the bolt and onto the flanged end of the bolt, and then pushing the bolt assembly by hand into the hole until the face plate is tight against the rock at the hole collar. The bolt is then secured by pumping water at high pressure through the pressure injection port until maximum expansion takes place as depicted in the post-expansion cross section. When inflated, the bolt is forced tightly against the sides of the bolt hole. No maintenance other than periodic inspection is necessary.

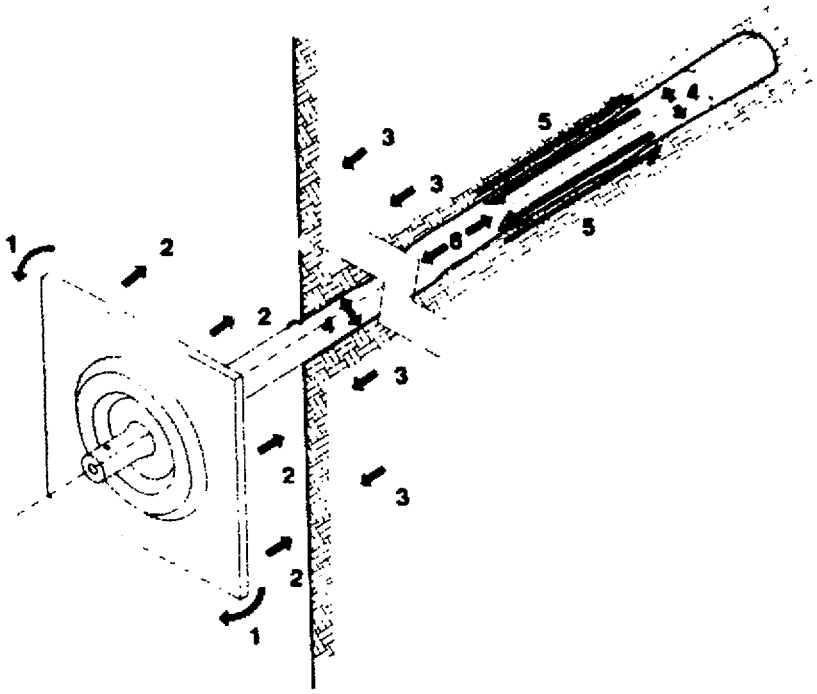

INFLATABLE (SWELLEX) BOLT SET

The inflatable bolt acts in the beam building mode of rock support. Forces due to differential rock movement along the length of the bolt are resisted by the friction forces (5) between the bolt and hole wall created by the high pressure expansion (4). Additional forces (3) of loose rock movement near the collar of the hole are resisted by the face plate (2) causing tension (6) in the bolt. Excess force of this type may cause buckling (1) of the face plate.

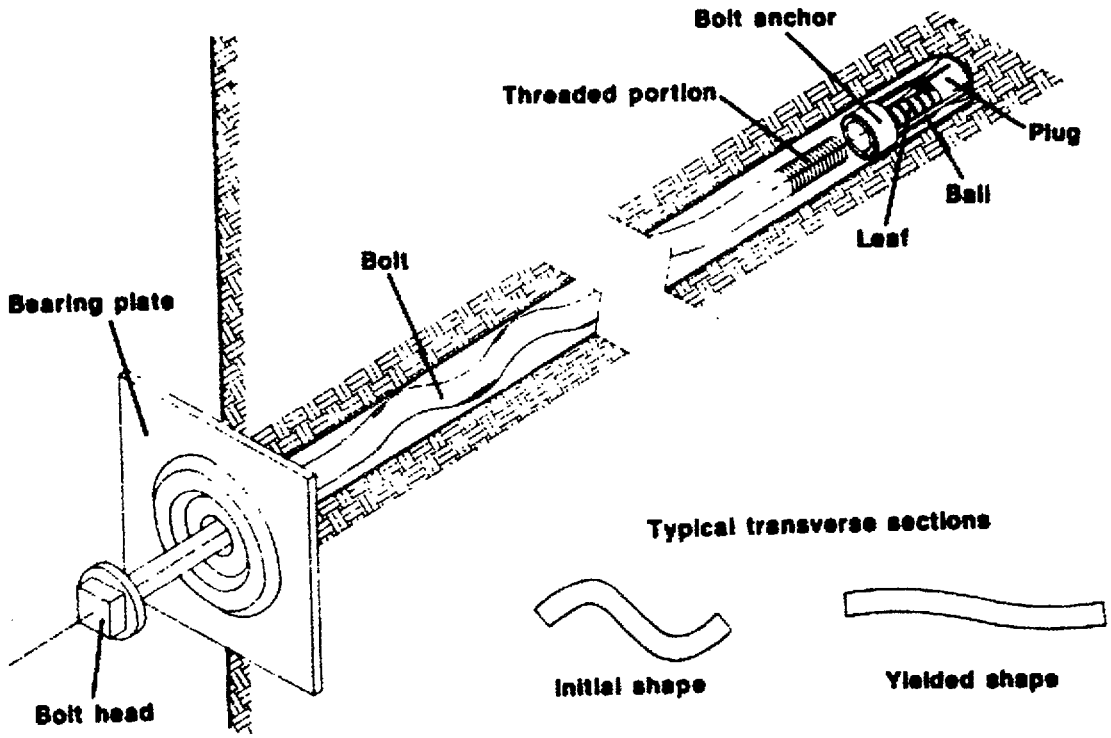

HELICAL BOLT SET

Parameters	ASTM Test No.*	Bolt	Plate	Anchor
Poisson's Ratio (v)	Part 10 E-132	0.29	0.30	.30
Young's Modulus (E) 10^6 psi	Part 10 E-231	29→30	29→30	29→30
Coeff. of Thermal Exp (α) $[(in/in)x10^{-6}]/°F$	Part 10 B-95	6.40	N/A	N/A
Yield Load (min) lbf - 3/4" ϕ	Part 10 E-8	13,360	N/A	16,000→ 28,000
Ultimate Tensile Load(min) lbf - 3/4" ϕ	Part 10 E-8	23,380	N/A	N/A
Thermal Conductivity (k) BTU/(HR • FT • °F) @ 122° F	Part 41 E-457	29.6	28.0	27.6

*1980 Book of ASTM Standards

Note: The values listed in this table have been determined from published test data and the authors cannot guarantee the accuracy of the results. For critical applications it is strongly recommended that pull-out and load-deformation characteristics be determined from field tests on the bolts to be used.

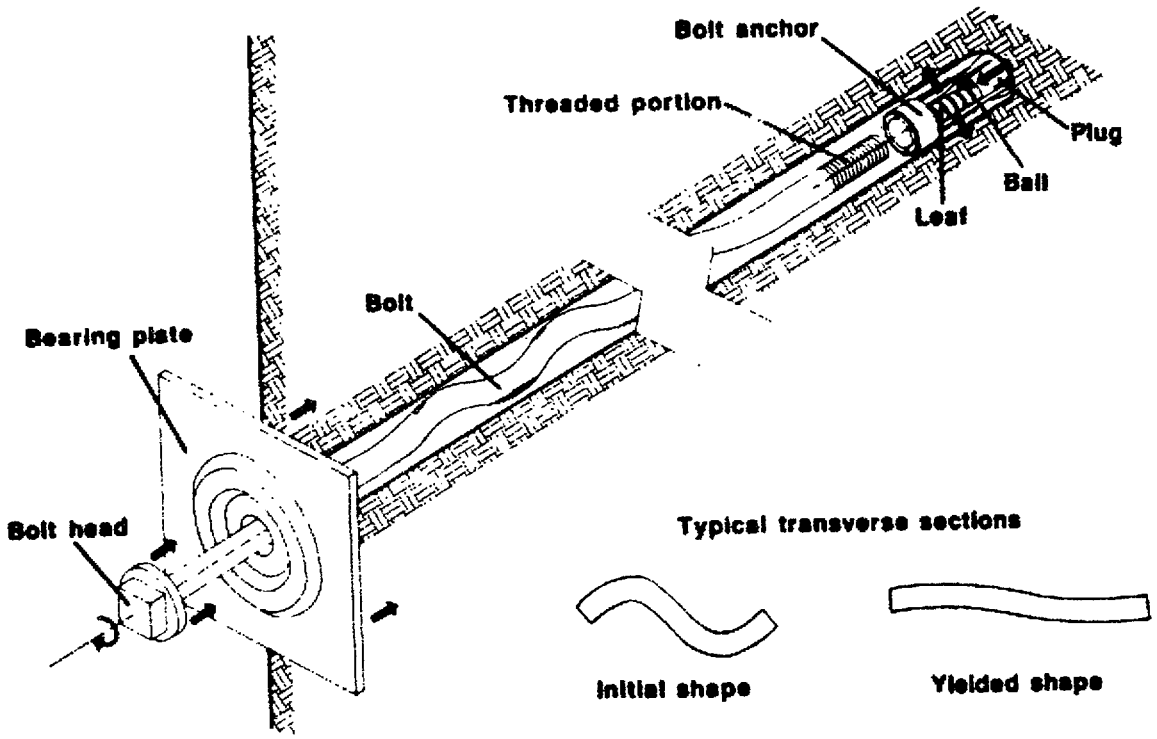

HELICAL BOLT SET

The components of the helical bolt set are shown above. The helical bolt is threaded on one end and has a square bolt head on the other. The anchor assembly consists of several leaves that are forced radially outward when the anchor plug is drawn into the anchor assembly. The bail serves only to hold the anchor plug in place during installation. The bolt is installed by first sliding a bearing plate onto the bolt head, then attaching the bolt anchor to the threaded end of the bolt. The bolt assembly is then inserted into a bolt hole, ensuring that the bearing plate contacts the bolt hole collar. The bolt is then rotated, which forces the bolt anchor plug to expand the leaves against the sides of the bolt hole and thus secures the bearing plate to the rock. Increase in bolt tension is facilitated by periodic returquing. The helical shape allows this bolt to provide yielding capability in the simplest manner.

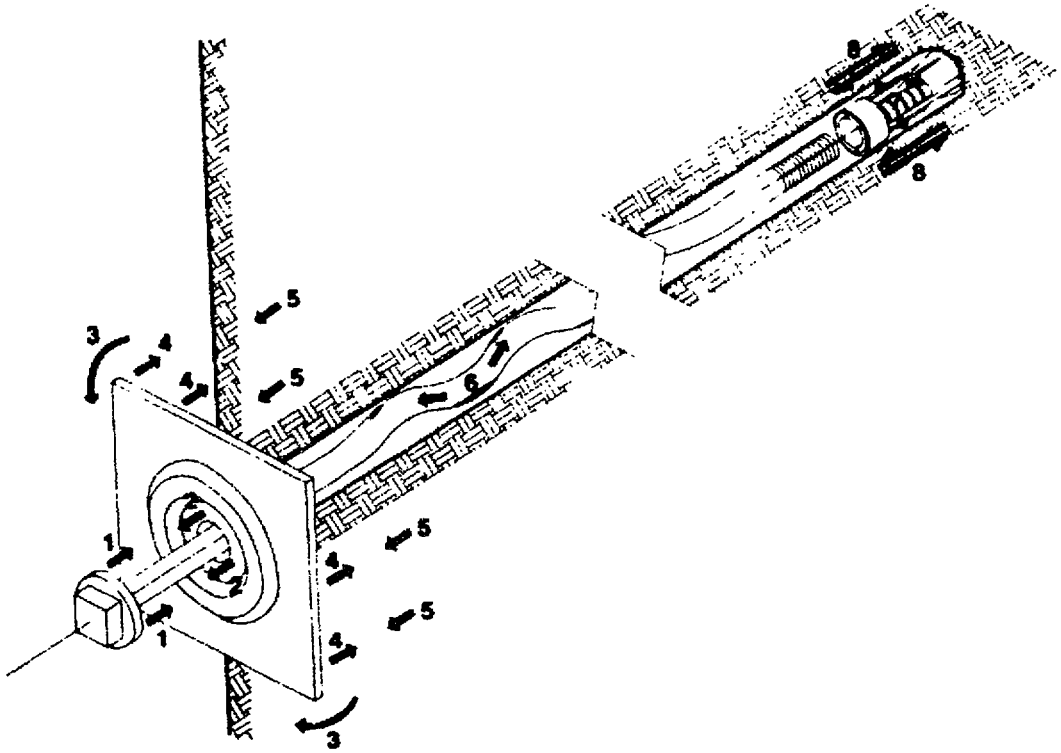

HELICAL BOLT SET

The helical bolt is used for the suspension mode of rock support. The bolt anchor, after torquing, acts through the compression and shear forces (7 and 8) at the anchor point, coupled with the resistance (1) of the bolt head to create tension (6) in the bolt. This provides a resisting force (4) from the bearing plate to oppose differential rock movement forces (5) at the rock face. The bolt head also acts (1 and 2) to hold the bearing plate firmly in place. The helical bolt acts as a coiled spring, resisting forces due to rock deflection by its spring force. This process continues until rock movement stops or the bolt is completely straightened, in which case the bearing plate may buckle (3) or the bolt may fail. The helical bolt allows more rock deflection before reaching the tensile strength of the bolt steel than does a straight bolt of the same initial length. In suspension, the bolt anchor is secured into competent ground and supports rock slabs between the anchor and the face plate.

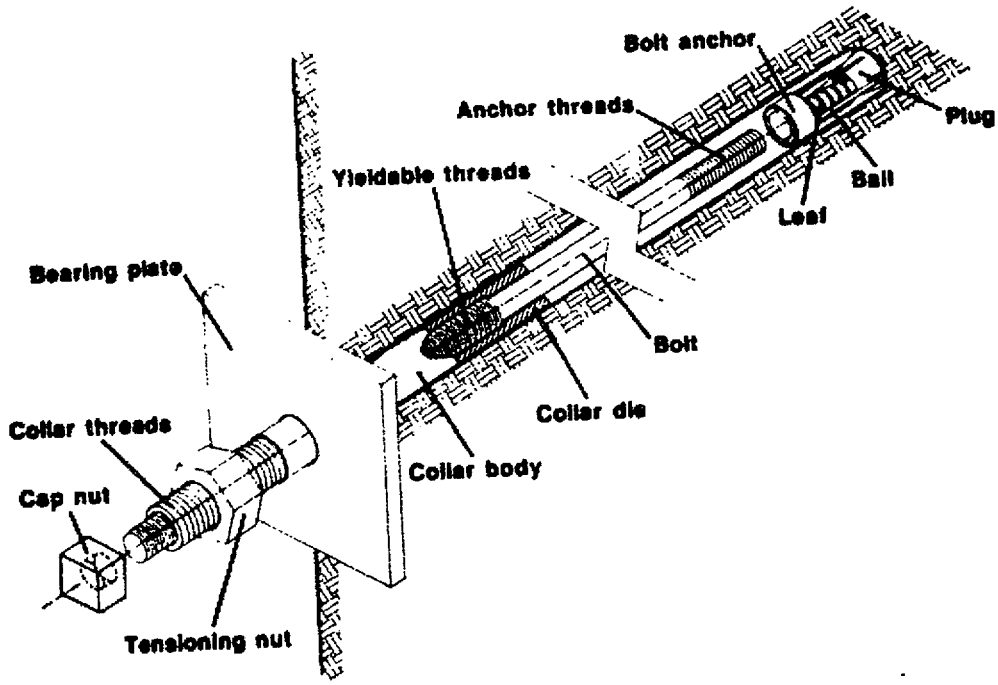

BUREAU OF MINES - CONWAY YIELDING BOLT SET

Parameters	ASTM Test No.*	Bolt	Plate	Anchor
Poisson's Ratio (v)	Part 10 E-132	0.29	0.30	.30
Young's Modulus (E) 10^6 psi	Part 10 E-231	29→30	29→30	29→30
Coeff. of Thermal Exp (α) $[(in/in)x10^{-6}]/°F$	Part 10 B-95	6.40	N/A	N/A
Yield Load (min) lbf - 3/4" ϕ	Part 10 E-8	13,360	N/A	16,000→ 28,000
Ultimate Tensile Load(min) lbf - 3/4" ϕ	Part 10 E-8	23,380	N/A	N/A
Thermal Conductivity (k) BTU/(HR • FT • °F) @ 122° F	Part 41 E-457	29.6	28.0	27.6

*1980 Book of ASTM Standards

Note: The values listed in this table have been determined from published test data and the authors cannot guarantee the accuracy of the results. For critical applications it is strongly recommended that pull-out and load-deformation characteristics be determined from field tests on the bolts to be used.

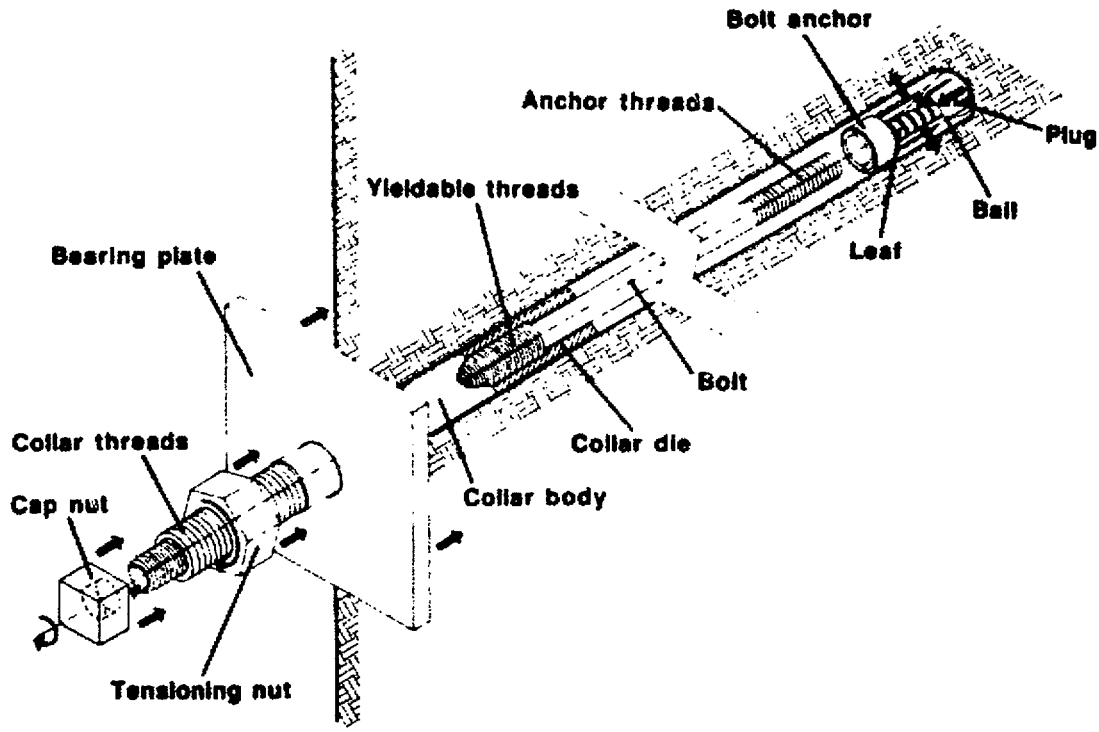

BUREAU OF MINES - CONWAY YIELDING BOLT SET

The components of the Bureau of Mines - Conway yielding bolt set are shown above. When the bolt is manufactured, an externally-threaded tubular collar having an inside tapered die at one end is placed on the bolt with a slight interference fit before the bolt is threaded. Threads having a greater outside diameter than the nominal bore diameter of the die, but less than the bore diameter of the collar body, are then rolled on both ends of the bolt; thus, the collar cannot slide past the threads. The bolt threads nearest to the collar die are termed yieldable threads and those at the other end of the bolt are termed anchor threads. The bolt anchor assembly consists of several leaves that are forced radially outward when the anchor plug is drawn into the anchor assembly. The bail serves only to hold the anchor plug in place during installation. The bolt is installed by first sliding the collar toward the yieldable threads until the collar die stops against the threads, then attaching the tensioning nut to the collar threads and a cap nut to the yieldable threads. A bearing plate is then slid over the collar onto the tensioning nut, and the bolt anchor is attached to the anchor threads. The bolt assembly is then inserted into a bolt hole. The cap nut and bolt are then rotated, which forces the bolt anchor plug to expand the leaves against the sides of the bolt hole, setting the anchor. The tensioning nut is then rotated, drawing the nut and bearing plate to the rock and tensioning the bolt, until the desired torque is obtained. The cap nut is then removed. Occasional re-torquing of the tensioning nut may be necessary to maintain bolt tension.

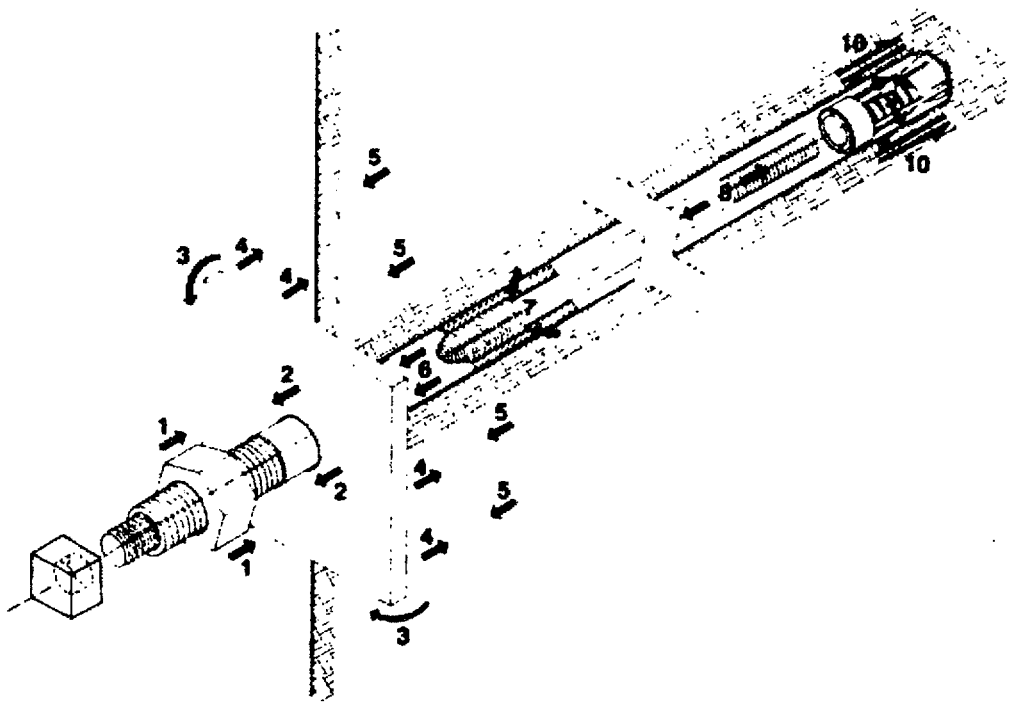

BUREAU OF MINES - CONWAY YIELDING BOLT SET

The Bureau of Mines - Conway bolt is used for the suspension mode of rock support. The bolt anchor, after torquing, acts through the compression and shear forces (9 and 10) at the anchor point, coupled with the resistance (1) of the tensioning nut to create tension (8) in the bolt. This provides a resisting force (4) at the bearing plate to oppose differential rock movement forces (5) at the rock face. The tensioning nut also acts (1 and 2) to hold the bearing plate firmly in place. As forces (5) due to rock deflection increase tension (8) in the bolt, resistance (4) to movement of the bearing plate, tensioning nut, and collar is overcome. The plate pushes (2) on the tensioning nut pulling the collar along the bolt causing the collar die to deform the yieldable threads. This process continues until either rock deflection stops or the collar die reaches the end of the bolt. A nearly constant tension is normally maintained in the bolt.

In suspension, the bolt anchor is secured into competent ground and supports rock slabs between the anchor and the bearing plate.

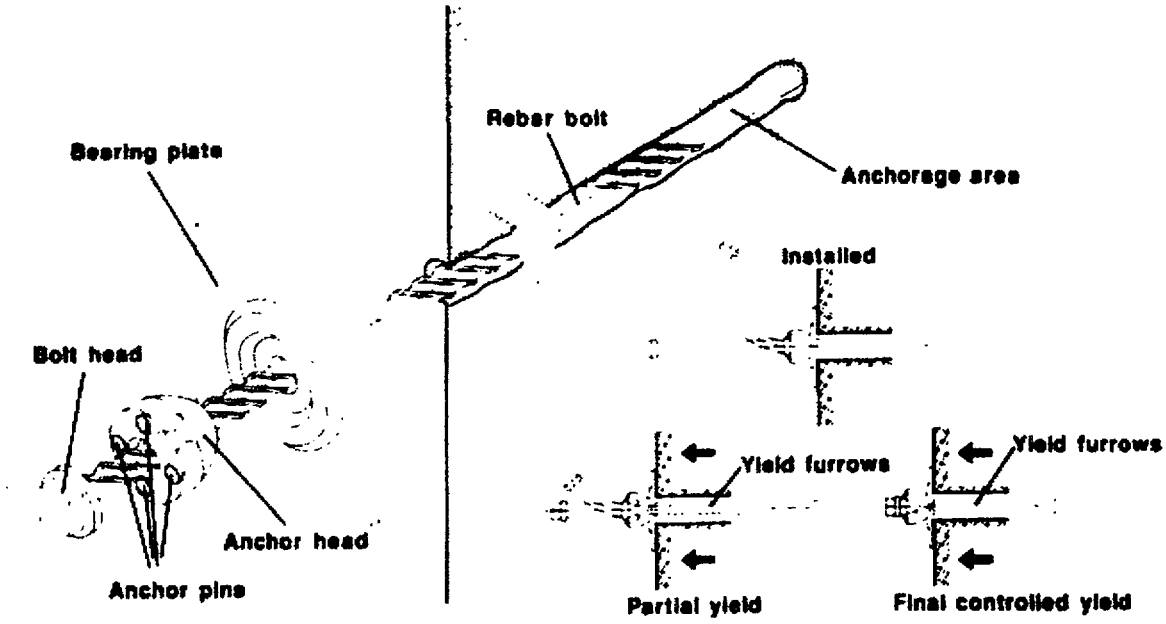

MEYPO-HEAD YIELDING BOLT SET

Parameters	ASTM Test No.*	Bolt	Plate	Anchor
Poisson's Ratio (v)	Part 10 E-132	0.29	0.30	N/A
Young's Modulus (E) 10^6 psi	Part 10 E-231	29→30	29→30	N/A
Coeff. of Thermal Exp (α) $[(in/in)x10^{-6}]/°F$	Part 10 B-95	6.40	N/A	N/A
Yield Load (min) lbf - 3/4" ϕ	Part 10 E-8	13,360	N/A	30,000→ 40,000
Ultimate Tensile Load(min) lbf - 3/4" ϕ	Part 10 E-8	23,380	N/A	N/A
Thermal Conductivity (k) BTU/(HR • FT • °F) @ 122° F	Part 41 E-457	29.6	28.0	N/A

*1980 Book of ASTM Standards

Note: The values listed in this table have been determined from published test data and the authors cannot guarantee the accuracy of the results. For critical applications it is strongly recommended that pull-out and load-deformation characteristics be determined from field tests on the bolts to be used.

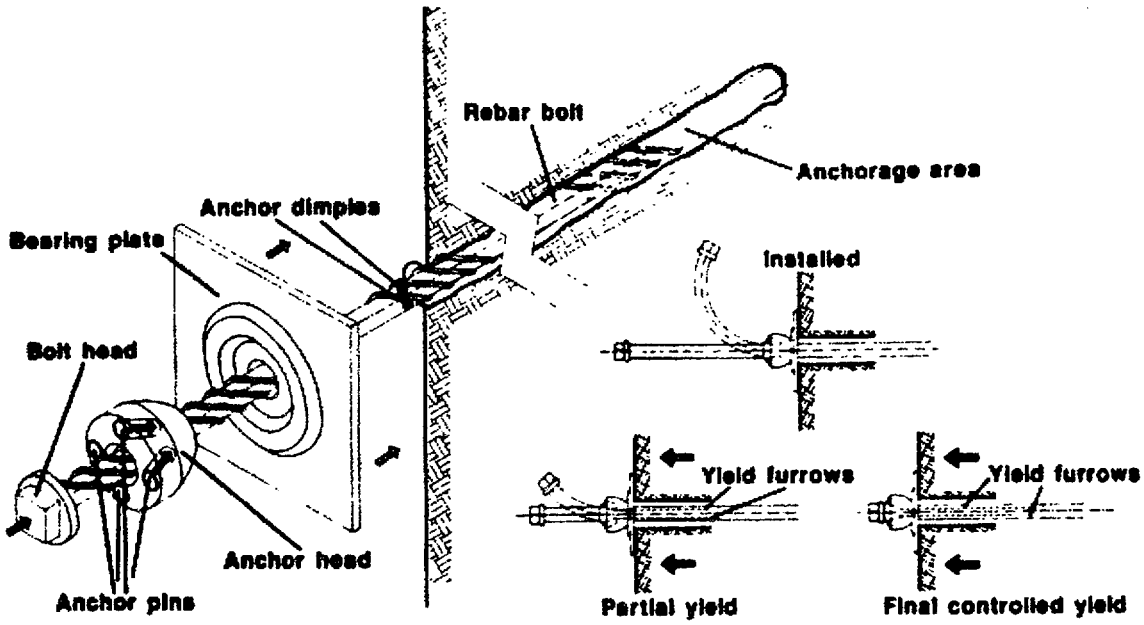

MEYPO-HEAD YIELDING BOLT SET

The components of the Meypo-Head yielding bolt set are shown above. The bolt is constructed of rebar and has a standard bolt head on one end. The Meypo anchor head consists of a steel collar with four bullet-shaped anchor pins inserted into holes in the collar. The bolt can be anchored by either grout or mechanical anchor. In either case, the bolt is installed by first sliding the Meypo anchor head and face plate onto the bolt and then inserting the grout cartridge and the assembly into the bolt hole to the desired depth and rotating to either mix the grout or secure a mechanical anchor.

After curing of the grout, the anchor head and bearing plate are moved up against the hole collar to the location of the pre-formed anchor dimples on the bolt. The anchor head is locked in position by pounding the pins into the dimple indentations and then securing the pins with punch marks in the outer rim of the pin boreholes. The excess bolt extending out from the anchor head can be bent out of the way. The cross sections shown depict the initial installed position, partial yield, and final controlled yield position as well as the yield furrows made by the anchor pins. No maintenance other than occasional inspection is required for the grout anchor while periodic retorquing of the bolt may be required for a mechanical anchor.

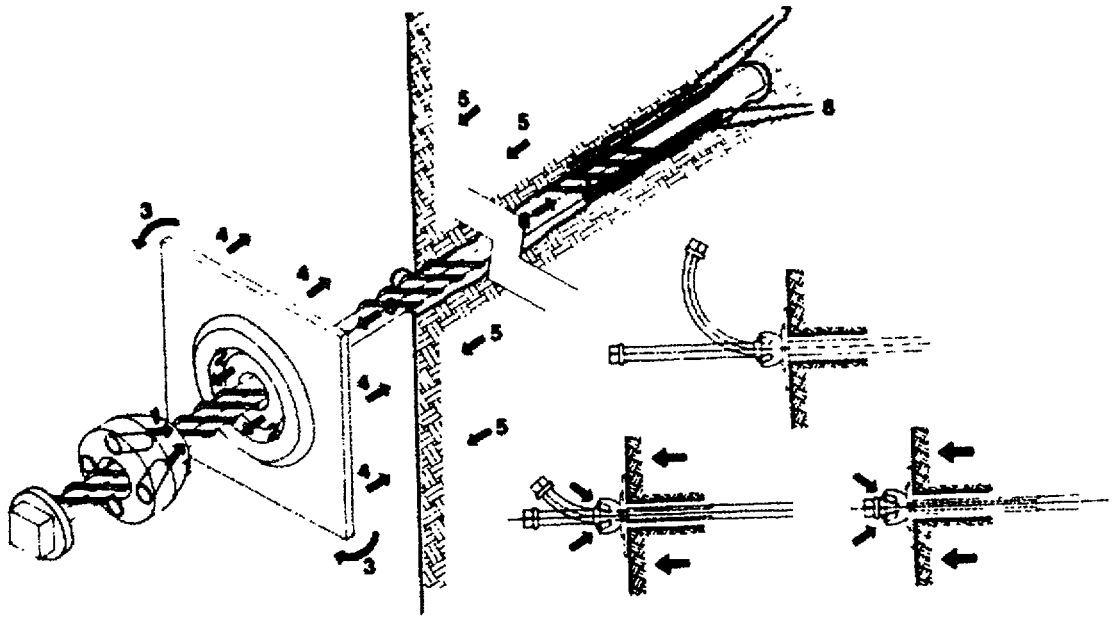

MEYPO-HEAD YIELDING BOLT SET

The Meypo-Head bolt set acts in the suspension mode of rock support. The rock members along the length of the bolt are supported by the anchor head and bearing plate with the shear forces (7 and 8) of the grout anchor holding the bolt in the hole. As forces (5) due to rock deflections increase tension (6) in the bolt, resistance (4) of the face plate and anchor head to movement is overcome. The plate pushes (2) on the anchor head which slides on the bolt and the anchor pins gouge (1) furrows along the side of the bolt. This process continues until either rock deflection stops or the anchor head reaches the bolt head in which case some buckling (3) of the face plate may occur.

APPENDIX 2

CORROSION OF SUPPORTS, HANFORD, WASHINGTON

CONTENTS

Page

Introduction..... 1

Effect of carbon content..... 1

Effect of pH..... 1

Effect of oxygen content..... 1

Effect of chloride content..... 4

Effect of temperature..... 4

Stress corrosion..... 4

Corrosion protection..... 5

Corrosion resistent materials..... 5

References..... 6

ILLUSTRATIONS

Figure 1. - Effect of carbon content on the relative corrosion rate of steel 2

Figure 2. - Effect of pH on corrosion rate of iron in aerated soft water 3

INTRODUCTION

Corrosion and deterioration of supports materials could be a major factor in the design of support systems for the Hanford repository. Consequently, the following information is included. It is primarily applicable to steel supports at the Hanford repository, but some parts could be applicable to other repositories as well.

Corrosion of steel supports arises from thermodynamic instability between the steel and its environment. It can cause weakening and eventual failure of the supports. Corrosion can be prevented or reduced by proper selection of materials, control or alteration of the environment, and corrosion protection such as inhibitors and coatings.

EFFECT OF CARBON CONTENT

Rock bolts are manufactured from mild steel, i.e., with a carbon content of about 0.1 percent. Wire cable such as used in cable bolts is manufactured from high-carbon steel with a maximum carbon content over 0.44 percent and usually between 0.7 and 0.8 percent. The corrosion rate of steel is dependent on the carbon content, and the corrosion rate of rock bolts is expected to be substantially less than cable bolts in identical corrosive environments, Figure 1 (1).

EFFECT OF pH

The effect of pH on the corrosion rate of iron immersed in aerated soft water at room temperature is shown in Figure 2 (2). The pH of the ground water at the Hanford site is about 9.5 +/- 0.5 (3). Therefore, the corrosion rate of rock bolts exposed to water under similar conditions would be expected to be about 10 mils per year. However, as explained later, other factors can greatly influence corrosion rate.

Rock bolts and cables bolts are commonly grouted with portland cement concrete. Free calcium hydroxide within the grout increases the pH and is therefore beneficial in reducing corrosion at the bolt-grout interface. It has been suggested that the alkali content of the grout is the ultimate agent governing pH, but this hypothesis remains to be proven (2).

EFFECT OF OXYGEN CONTENT

The Spokane Research Center of the U.S. Bureau of Mines is determining the corrosion characteristics of wire cable, but most of this research centers around the corrosion of cable exposed to acid mine water and is therefore not applicable to repositories. However, in control experiments, the corrosion rates of cable wire were determined after exposure to both aerated and non-aerated distilled water at 95° F. The corrosion rate in non-aerated water is about 6 mils per year. However, when exposed to aerated water, i.e., saturated with oxygen, the corrosion rate is about 37 mils per year. Although these results are not directly applicable to repositories, it is clear that the oxygen content of any water that may contact steel supports is an important factor in determining corrosion rate. The ground water at the Hanford site contains little or no oxygen, and this lack of oxygen would tend to prevent corrosion if oxygen is not supplied by some other source such as the ventilation air or water dissociation. Oxidation of unprotected steel supports with release of hydrogen may occur in wet areas with the oxygen

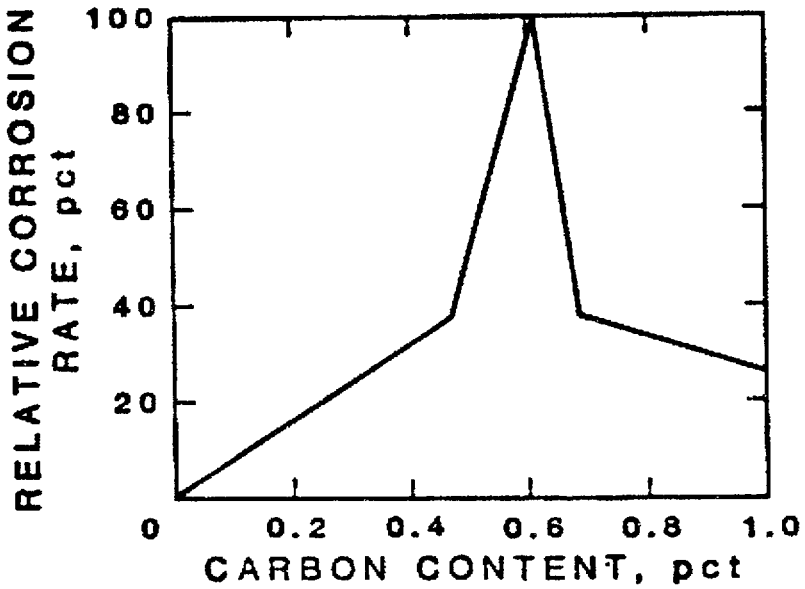

Figure 1. - Effect of carbon content on the relative corrosion rate of steel (adapted from Wang and Beck).

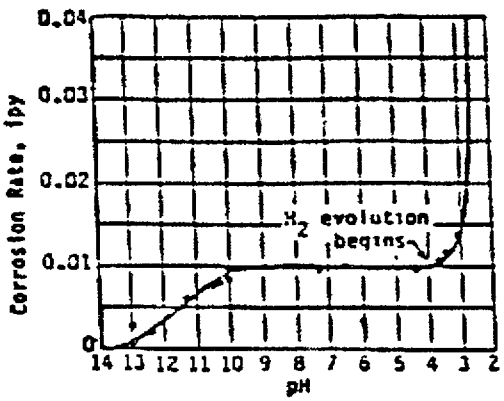

Figure 2.- Effect of pH on corrosion rate of iron in aerated soft water (adapted from Slater).

supplied from the (thermally activated ?) dissociation of water. Dissociation of water has been reported above 150° C (302° F) in a simulated Hanford repository environment (4).

EFFECT OF CHLORIDE CONTENT

The exposure of reinforced concrete to chloride-containing water has recently received considerable attention and simulated substantial research. The impetus for these investigations is the damage to concrete bridges and highways caused by the application of chloride compounds for deicing. The reported chloride content of the ground water at the Hanford site is about 450 milligrams per liter and could have an adverse effect of unprotected steel supports (5).

EFFECT OF TEMPERATURE

At the Spokane Research Center, wire cables were exposed to an atmosphere of 35° C (95° F) and 100 percent humidity. Corrosion rate was only about 0.04 mils per year and is not expected to be temperature sensitive. At temperatures above 100° C (212° F) and at atmospheric pressure, water will be in a gaseous phase and in the absence of liquid water, corrosion rate will generally be small. However, atmospheric corrosion rate can be significantly higher if contaminants such as chlorides and sulfur compounds are present.

Steel immersed in water corrodes much more rapidly and corrosion rate is expected to increase with temperature. The corrosion of unprotected steel supports in a high temperature, oxygen saturated, wet environment could be extremely severe. However, this should be substantiated by testing in an environment identical to that of the repository because other factors could influence corrosion. For example, passivity may retard corrosion or local corrosion such as pitting could prematurely weaken supports.

STRESS CORROSION

Stress corrosion cracking occurs when a material is simultaneously subjected to stress and a corrosive environment. It is a possible deterioration mechanism in all stressed metal supports. Stress corrosion tests should be run on all metals used to fabricate supports in the specific repository environment.

Wire cables are susceptible to stress corrosion in some environments. For example, intergranular breaks can be produced in cable wire by tensile stress and immersion in dilute (0.01 normal) ammonium nitrate and sodium nitrate (6). The maximum reported NO^3 content is only 0.5 milligrams per liter (.0000058 normal) at the Hanford site and therefore stress corrosion of cable bolts is not expected from this source (3).

Some stainless steels are susceptible to stress corrosion particularly in environments containing chlorides which is a characteristic often overlooked by structural engineers (7). Some titanium alloys are resistant to corrosion in chloride containing environments (6). These alloys have been suggested as possible materials for constructing supports, but the necessity for stress corrosion tests in repository environments can not be overemphasized.

CORROSION PROTECTION

Rock bolts and cable bolts in mines are commonly grouted and this serves as effective corrosion protection. Shotcrete can be applied over these supports for additional protection, and additives and sealers have been developed to inhibit the diffusion of water and chlorides. Coatings are used for rebar protection in reinforced concrete exposed to severe corrosive environments, and these appear to be applicable for underground steel supports. Both inorganic (epoxies) and metallic (zinc, nickel) coatings are effective in preventing corrosion.

CORROSION RESISTENT MATERIALS

Many high strength, corrosion resistent materials are used in industry, e.g. the aerospace industry. They are not used by the mining industry for permanent supports because of their high cost. However, some of these materials are used in the manufacture of temporary supports.

Some stainless steels and titanium alloys may be suitable for constructing supports. Both of these materials could substitute for ordinary low carbon steel in the manufacture of rock bolts and other supports.

Many composite materials, e.g. fiberglass, Kevlar fibers, and carbon fibers with advanced polymer binders, are used in aircraft and other structures. They are particularly useful because of their high strength to weight ratio as well as corrosion resistance. They also could be used in the fabrication of permanent supports.

REFERENCES

1. Wang, R., and F. H. Beck. New Stainless Steel Without Nickel or Chromium for Marine Applications. Metals Progress, Vol. 123, No. 3, 1983, pp. 72-76.

2. Slater, J. E. Corrosion of Metals in Association with Concrete. ASTM STP 818, 83 pp.

3. U.S. Department of Energy. Repository Horizon Identification Report, DOE, SD-BWI-TY-001, 1983, 508 pp.

4. Apted, M. J., and P. E. Long. Geochemical Characterization of Basalt/Groundwater Interaction for a Nuclear Waste Repository at the Hanford Site, Washington. U.S. Department of Energy, RHO-BW-SA-215A, 1982, 1 p.

5. U.S. Department of Energy. Environmental Assessment, Reference Repository Location, Hanford Site, Washington. DOE/RW/-0070, Three Volumes, 1986.

6. Brown, B. F. Stress Corrosion Cracking Control Measures. Nat. Assoc., Corrosion Engrs., 1981, 71 pp.

7. Engineering News Record. Vol. 218, No. 9, 1987, pp. 11.

APPENDIX 3

RELEVANT EXPERIENCE

HIGH TEMPERATURE ROCK SUPPORT

TABLE OF CONTENTS

	Page
Introduction	1
Waste Storage Programs	2
Related Projects	3
Specific Research	4
Recommendations	7
Research Programs	10
Avesta Hot Water Storage Project	10
Spent Fuel Test - Climax	12
Nuclear Waste Repository Simulation Experiments	14
Project Salt Vault	17
Office of Nuclear Waste Isolation Test Site	21
Basalt Waste Isolation Project	22
Rio Blanco Oil Shale Company Operations	24
Avery Island Salt Mine	26
Waste Isolation Pilot Plant	28
Canadian Nuclear Fuel Waste Management Program	30
Stripa Mine	31
Specialist Interviews	33
Dr. John F. Abel	33
Dr. Tor L. Brekke	34
Dr. N. Y. Chang	35
Dr. Yoginder P. Chugh	36
Dr. Richard Goodman	38
Mr. Richard Hine	39
Dr. Earl R. Hoskins	40
Dr. William Pariseau	41
Mr. Thomas Peeso	42
Mr. Jean-Francois Raffoux	44
Dr. Miklos Salamon	45
Dr. Shosei Serata	46
Dr. Knostanty F. Unrug	47
Mr. William G. Wood	48
Others	49

INTRODUCTION

The permanent subsurface isolation of defense and civilian generated high-level nuclear waste is not a problem unique to the United States. Many countries around the world are presently involved in developing storage facilities capable of accepting processed nuclear waste within the next 20-40 years. Although the proposed geologic settings vary greatly, including evaporites, clays, and granites, research programs among the involved countries are quite similar. Generally, site specific subsurface research is required and commonly incorporates all or a portion of the following fields of associated study:

- Waste packaging
- Excavation techniques
- Handling and emplacement
- Rock mass characterization/response methods
- Plugging and sealing
- Retrieval methods

A review of the various international waste storage programs presently underway indicates the requirement to demonstrate retrievability prior to first waste emplacement is unique to the United States. Immediate backfilling upon canister emplacement, coupled with no requirement to potentially retrieve at a future date, effectively eliminates the need to support a heated rock mass. Access entries can be sufficiently offset from storage rooms to limit maximum lifetime temperatures to levels controllable with currently available technology. As a result, no specific research related to rock support performance in elevated temperature environments, with few exceptions, has

been conducted to date. The need for rock support is, of course, site specific, and can, perhaps, be extrapolated from acquired in situ geotechnical data and laboratory and computer model studies for similar rock types.

Waste Storage Programs

In an attempt to determine the state-of-the-art for high temperature rock support, a review of past and current research programs underway at the various international sites was initiated. Projects investigated included the following:

(1) Spent Fuel Test - Climax Mine
Nevada Test Site (granite)

(2) Nuclear Waste Repository Simulation Experiments
Asse Salt Mine
Asse, Federal Republic of Germany (salt-potash)

(3) Basalt Waste Isolation Project
Rockwell-Hanford Operations
Hanford, Washington (basalt)

(4) Project Salt Vault
Lyons, Kansas (salt)

(5) Office of Nuclear Waste Isolation Test Site
Colorado School of Mines Experimental Mine
Idaho Springs, Colorado (granite)

(6) Avery Island Salt Mine
Avery Island, Louisiana (salt)

(7) Waste Isolation Pilot Plant

Carlsbad, New Mexico (salt)

(8) Canadian Nuclear Fuel Waste Management Program

Underground Research Laboratory

Pinawa, Manitoba (granite)

(9) Stripa Iron Mine

Orebro, Sweden (granite)

*(10) Grimsel Rock Laboratory

Lucerne, Switzerland (granite)

*(11) Pasquasia Salt Mine

Sicily (marly blue clay)

*(12) Mol Nuclear Waste Storage Laboratory

Mol, Belgium (clay)

*(13) Akenobe Mine

Japan (shalestein)

*(14) Konrad Iron Mine

Salzgitter, Federal Republic of Germany (iron ore)

Related Projects

Several potential sources of related information not associated with nuclear waste isolation were also reviewed. They included:

(1) Heated water and oil cavern storage projects;

(2) Oil shale in situ retorts;

*(3) Subsurface nuclear testing facilities;

*(4) Solution mining projects;

(Note: *Discussion regarding this subject is not included in the following sections due to insufficient information.)

(5) Deep mining operations; and

(6) Expert interviews with specialists in the fields of rock mechanics, mining, and waste isolation.

More detailed discussions of the international programs and projects are coupled with personal interviews in later sections.

Specific Research

With the exception of Project Salt Vault, no specific research regarding rock stabilization has been conducted that relates to the long-term storage of nuclear waste in geologic repositories. Rock bolting is the most common form of support at the various test sites; its use is confined to stabilizing local anomalous zones or as a preventative measure in critical areas of the facility. Heater tests have concentrated on brine migration, rock degradation, and entry deformation and have not been of sufficient duration to determine the effects of prolonged or cyclic heating on rock mass stability. Heated rock tests in massive salt deposits, the most deformable of the selected host media, have been generally inconclusive as to the need for roof support due to slow heat transfer to the peripheral rock mass and minor resultant deformations. The support mechanics of bolts and associated stabilizing systems have not been evaluated, to date, under expected repository conditions; a fact reiterated by many of the most knowledgeable participants in the field of nuclear waste storage.

As previously mentioned, a quantitative evaluation of the contribution of rock bolts to roof stability was performed as part of the Project Salt Vault waste

isolation research effort. Sponsored by the now defunct U.S. Atomic Energy Commission, under contract with the Union Carbide Corporation, demonstration of the disposal of high-level radioactive solids was successfully completed during the project in an inactive salt mine owned by the Carey Salt Company near Lyons, Kansas. The project was initiated in 1963, with all radioactive operations completed by mid-1967. During the course of the demonstration, a shale parting 2 ft into the immediate roof dictated the use of some form of roof support; especially in light of the anticipated accelerated room deformation resulting from the introduction of a heat source. As a result, initial torque, retorque, roof sag, and bolt load data were recorded for full-bolt installations in all of the test rooms. Bradshaw and McClain, both of whom were primary contributors to the project Salt Vault research program, provide an excellent overview of their bolting investigation (Bradshaw, R. G., and W. C. McClain, 1969, Roof-Bolt Test and Application in Supporting a Two-Foot-Thick Roof Bed, Proceedings Third Symposium on Salt, Case Western Reserve, Univ., Cleveland, OH, vol. 2, pp. 466-470).

> "In Project Salt Vault there was a 2-ft-thick bed of salt in the roof which was separated from the salt above by a shale parting. This bed was sagging at a rate of about 0.2 in/year in the center of a 60- X 44-ft room. This was normal and would have been of no concern except that it was planned to place heat sources in the floor. Experience indicated that this might cause an order of magnitude increase in the sag rate, and could possibly cause a roof fall.

There was little available information concerning anchorage capacities which could be developed in rock salt. Therefore, a test was made with 37 bolts installed on 4-ft centers in staggered rows in the center of the room. Using a special retorquing procedure, an average load of about 8000 lb/bolt was achieved, the roof was lifted about 0.08 in., and the sag rate was reduced to zero.

On the basis of this test, the experimental area was bolted using about 1600 bolts. When the heat was applied in the floor, the anticipated horizontal thrust on the roof bed (which would have resulted in accelerated sag) took place, and the bolts reached loads of 15 to 20 thousand pounds (four to five times the dead-weight load), but the bed was prevented from any further sag. That the anchors were capable of developing this amount of strength in salt is postulated to be a result of the retorquing procedure used."

It should be noted that Bradshaw and McClain did not consider roof sag as the direct result of thermally-induced creep. In fact, the roof never became appreciably heated during the testing. The sag was purportedly due to horizontal thrust caused by expanding pillars on either side of the entry, which in turn were driven by heave and thermal stress development around the canisters in the floor.

RECOMMENDATIONS

Although many of the expert sources contacted were unaware of previous research related to high temperature rock stabilization, several recommendations were made regarding potential areas of rock support investigation prior to waste emplacement.

(1) Although a majority of the heat generated by the waste canisters will be confined to the emplacement rooms, thermally-induced stress changes may be expected repository-wide. Attention needs to be given to support requirements in entries not directly thermally loaded, especially those providing long-term repository access.

(2) Bolt hole response characteristics for various materials should be quantified when subjected to various temperature gradients. This would also include analyses of mechanical and chemical bolt, anchor/resin, and host rock degradation.

(3) While in situ heater tests have yet to generate high temperatures in the immediate roof rock, no evaluation of heat transfer to the roof through a conductive fill has been performed. The ability to support a filled emplacement room and subsequently remine the fill without damaging the support should be demonstrated.

(4) Methods to develop and assess ground-reaction-curves for creeping materials need to be researched. The timed installation of support

should incorporate consideration of the areal heat load, accelerated creep of the material, and degradation of the rock mass with time under unique repository conditions.

(5) Extensive spalling of roof and ribs due to heated ventilation may present serious maintenance problems in waste storage room access entries and return airways. The effects of ventilation, exhibiting variable temperatur and humidity, on a rock mass subjected to equally variable conditions should be evaluated.

(6) From a long-term stability standpoint, the geometry and orientation of underground openings should be optimally designed to best withstand the imposed magnitude and orientation of expected stresses.

(7) All potential support systems should be evaluated with respect to coupled thermal-hydrologic-mechanical-chemical (THMC) processes occurring throughout the needed periods of room stability.

Reviewing of the presented case histories and personal experiences, it becomes evident that little is known about high temperature rock support. It was the consensus of those contacted, however, that the "need" for rock support must be established first. Countries outside the United States currently initiating waste storage programs typically do not require options be maintained for retrieval. Therefore, combined with the immediate emplacement of backfill, the need for supporting excessively heated rock may be eliminated. In the U.S., retrieval considerations and debate over the timing of backfill emplacement keep the support of heated rock a major repository

operations issue yet to be resolved. With this in mind, it may be prudent to begin evaluating potential repository support systems and environments prior to site characterization.

RESEARCH PROGRAMS

Avesta Hot Water Storage Project
Avesta, Sweden

As a result of political action toward ending Sweden's dependence on nuclear power by the year 2010, research is being conducted in Avesta to determine the feasibility of long-term heat storage in water-filled subsurface caverns. Although the Avesta cavern is primarily a research project, its size, 15,000 m^3, is suitable for short-term heat storage in the district heating system. A much larger cavern, 100,000 m^3, potentially capable of the seasonal storage of heated water, is being built in Uppsala. The underground storage of heated oil has been practiced in Sweden for many years, providing considerable experience in cavern construction and operation. The heated water storage project at Avesta is a cooperative effort between the Swedish Council for Building Research, Swedish State Power Board, and the Research Council for Energy Resources.

The purpose of the project is to obtain design criteria for rock caverns in the "average" Swedish precambrian rock, concentrating on problems associated with engineering geology, rock mechanics, and thermally-induced geochemical issues (1). Beyond avoiding major zones of fractured rock, to prevent excessive leakage and required grouting, no special site selection was attempted. The cavern is presently set in a precambrian gneiss of sedimentary origin. Orthogonal jointing occurs throughout the rock mass with a common spacing frequency of about 2 per meter. Borehole water pressure tests showed little leakage through the joint system; the

cavern rock mass is considered to be watertight. Situated 25 m below the rock surface (very little soil above the rock), the complete cavern measures 45 m long, 18 m wide, and 22 m high. The cavern location ". . . is suitable regarding the stability of the roof of the rock cavern and also for obtaining sufficient counter-pressure of groundwater to prevent boiling"(1). With water body temperatures ranging from 40 to 115°C, rock response to thermal layering and corrosion of system components due to changing water chemistry become serious issues requiring research prior to operation start-up.

Specific research regarding the effects of high temperature water on rock support at Avesta has not been reported on. Approximately 280 cement-grouted, one inch diameter rebars, 4 m long, were placed in the walls of the cavern as jointing dictated. In addition, 140 similarly installed 4 m bolts and 90, 2.4 m bolts were installed in the roof. An observation gallery was built to directly observe rock surfaces and support performance in the cavern. Although no ground instabilities of any kind have been noted in or around the cavern to date, it has been shown theoretically that ". . .the thermally induced stress probably is a problem of less magnitude than the possible accumulation of deformation due to cyclic temperature loading." (1). However, this theory has not been thoroughly investigated in situ.

1. Bjurström, S., J. Martua, G. Rehbinder, and K. Röshoff, 1983, Stability of a Rock Opening Subjected to a Pulsating Temperature, Proceedings, 5th International Congress on Rock Mechanics, Melbourne, Australia, vol. 2, pp. E173-179.

Spent Fuel Test - Climax
Nevada Test Site

As part of the Nevada Nuclear Waste Storage Investigations (NNWSI), managed by the Nevada Operations Office of the Department of Energy (DOE), 11 spent fuel assemblies were emplaced 420 m below the surface in the Climax granitic stock at the Nevada Test Site (NTS) between June, 1978, and May, 1980. Referred to as the Spent Fuel Test - Climax (SFT-C) Project, personnel from Lawrence Livermore National Laboratory (LLNL) provided technical direction to investigate the feasibility of safe, reliable storage and retrieval of spent fuel from a commercial nuclear reactor.

Of particular interest to the study was the thermomechanical response of the rock mass to extensive areal heating. Stress and deformation measurements were collected throughout the heated test period and were found to compare well with the trends provided by computer modeling. Comparison of absolute values for stress changes and wall rock displacements was not possible, however, since measurements were not taken at the time of room development. Although the displacements about the periphery of the canister storage room were very small, approximately 1-2 mm, the data was sufficient to conclude that, in general, the granitic rock mass behaved thermoelastically. Exceptions did exist in areas where shear zones and faults occurred; deformations were greater and only partially recoverable (1).

Exploratory coring prior to heater and canister storage room development indicated the rock was strong and that "... openings of at least 16 m^2

would remain open for a relatively long period with minimal rock bolting as support" (2). Concern regarding the response of the surrounding rock mass to heating led to the decision to fully or partially bolt virtually the entire test area and support entries. Regular spalling, generated by excavation activities, required installation of wire mesh with all bolting. Conversations with Mr. Jessey Yow, task leader for SFT-C, LLNL, indicated that no roof control problems were experienced during the canister test period. He estimated that rock temperatures in the immediate vicinity of the canisters increased by more than 60°C, whereas entry temperatures did not rise by more than 30°C. As a result, thermally-induced spalling was not considered a viable explanation for localized roof and rib deterioration. No specific studies were conducted to evaluate rock support performance at elevated temperatures; therefore, the contribution of installed bolts to entry stability is not known.

1. Butkovich, T. R., and W. C. Patrick, 1986, Thermomechanical Modeling of the Spent Fuel Test-Climax, Proceedings 27th U. S. Symposium on Rock Mechanics, June 23-25, University of Alabama, Tuscaloosa, Ala., Chapt. 129, pp. 898-905.

2. Patrick, W. C. and M. C. Mayr, 1981, Excavation and Drilling at a Spent-Fuel Test Facility in Granitic Rock, Lawrence Livermore Laboratory, Livermore, CA, UCRL-53227, October, 45 pp.

Nuclear Waste Repository Simulation Experiments

Asse Salt Mine

Asse, Federal Republic of Germany

Brine migration tests were initiated in May, 1983, at the Asse Salt Mine, Federal Republic of Germany (FRG), as part of a bilateral US/FRG agreement to cooperatively investigate the safe storage of high-level nuclear waste in geologic repositories. Funding for the U.S. program is provided by the Department of Energy (DOE) through the Office of Nuclear Waste Isolation/ Battelle Memorial Institute (ONWI/BMI). In the FRG, the program is funded by the Bundesministerium fur Forschung und Technologie (BMFT) and is operated by the Institut fur Tiefiagerung of Gesellschaft fur Strahlen - und Umweltforschung (GSF-IFT). As stated, "... the primary objectives of the test are the observation of the effects of heat and gamma radiation on brine migration, the types of gases produced in the boreholes, the temperature distribution, and the thermomechanical behavior of the salt formation" (1). Four simulated canister emplacements, two employing actual radioactive sources, were installed in a single test room, 7.5 m high and 10 m wide, at the 800 m level between May and December of 1983. Formal testing during the operational phase was completed October 4, 1985; cool down and post-test activities began at this time. Only the data collected during the first 28 months has been published thus far.

Although the main thrust of research concentrated on prediction and measurement of brine transport and accumulation, supplemental data regarding local room deformation was collected throughout the

operational phase. The canister tests were designed to operate at a maximum salt temperature of 210°C, with a 3°C/cm temperature gradient at the borehole wall, closely approximating those conditions anticipated for U.S. storage facilities. Complete horizontal, vertical, and longitudinal room closure and local rock mass displacement was monitored from the onset of room development. In general, room closure rates, reaching equilibrium at 0.025 mm/day shortly after room development, nearly doubled once the canister heat sources were, located in the floor, activated. Roof and rib displacements were very small, on the order of several millimeters, with borehole extensometers indicating that most deformation occurred in the rock mass immediately adjacent to the opening. Floor heave was significantly affected by the thermal output of the canisters and surrounding heaters. Upwards of 90 mm of vertical heave was experienced over 838 days of heating (1). Although rock support was not required in the test room, the long-term effects of continuous heating on room stability have yet to be extrapolated from these short-term tests.

Mr. Tilmann Rothfuchs, Mine Project Manager, stated that no experimentation had been conducted at Asse concerning the high temperature performance of artificial rock support and that none was planned. Entry spalling was routinely managed by "mechanically" cleaning the roof and ribs every few years. Bolting is only used at Asse in high use/travel areas as a safety precaution. Federal Republic of Germany waste storage procedures call for immediate backfilling, and apparently require no contingency for retrieval, thereby precluding long-term room stability evaluations.

1. Coyle, A. J., J. Eckert, and H. Kalia, 1987, Brine Migration Test Report: Asse Salt Mine, Federal Republic of Germany, Technical Report, BMI/ONWI-624, January 155 pp.

Project Salt Vault
Lyons, Kansas

Sponsored by the U.S. Atomic Energy Commission, under contract with the Union Carbide Corporation, a demonstration of the disposal of high-level radioactive solids was successfully completed in an inactive salt mine owned by the Carey Salt Company near Lyons, Kansas. The demonstration spanned five years, beginning in 1963; the first radioactive material was placed in the mine in late 1965, with all radioactive operations completed by mid-1967. Thoughtfully dubbed "Project Salt Vault," the objective of the investigation was fourfold: "(1) to demonstrate the feasibility and safety of disposal of high-level radioactive solids in salt, (2) to design and demonstrate the equipment and techniques required to handle packages of high-level radioactive solids from point of production to the disposal location, (3) to determine the stability of salt under the influence of heat and radiation, and (4) to secure rock mechanics and thermal data which are needed for the design of an actual disposal facility" (1). During the course of the demonstration, the local geology dictated the use of a form of roof support; especially in light of the anticipated accelerated room deformation resulting from the introduction of a heat source. As a result, initial torque, retorque, roof sag, and bolt load data were recorded for full-bolt installations in all of the test rooms. This study represents the only existing quantitative analysis regarding the in situ performance of rock support subjected to potential repository conditions.

Bradshaw and McClain, both of whom were primary contributors to the Project Salt Vault research program, provide an excellent overview of

their bolting investigation (2):

"In Project Salt Vault there was a 2-ft-thick bed of salt in the roof which was separated from the salt above by a shale parting. This bed was sagging at a rate of about 0.2 in/year in the center of a 60- X 44-ft room. This was normal and would have been of no concern except that it was planned to place heat sources in the floor. Experience indicated that this might cause an order of magnitude increase in the sag rate, and could possibly cause a roof fall.

There was little available information concerning anchorage capacities which could be developed in rock salt. Therefore, a test was made with 37 bolts installed on 4-ft centers in staggered rows in the center of the room. Using a special retorquing procedure, an average load of about 8000 lb/bolt was achieved, the roof was lifted about 0.08 in., and the sag rate was reduced to zero.

On the basis of this test, the experimental area was bolted using about 1600 bolts. When the heat was applied in the floor, the anticipated horizontal thrust on the roof bed (which would have resulted in accelerated sag) took place, and the bolts reached loads of 15 to 20 thousand pounds (four to five times the dead-weight load), but the bed was prevented from any further sag. That

the anchors were capable of developing this amount of strength in salt is postulated to be a result of the retorquing procedure used."

The retorquing procedure was quite simple. A manually operated torque wrench was employed to achieve torque values ranging between 125 to 175 ft-lbs upon initial installation of the bolt. The following day they would be retorqued to values 15 to 25 ft-lbs greater than the original setting torque. This retorquing accounted for creep occurring around the bolt expansion anchor. Subsequent retorquing at later dates caused the anchor to expand to a size somewhat larger than the bolt hole, thereby further improving the bolt anchorage capacity. Although this mechanism of anchorage remains unproven, it is a fact that the anchors were capable of developing upwards of 20,000 lb load capacities, negative roof sags, and virtually zero sag rates throughout the heated room test periods.

It should be noted that roof sag was not the direct result of thermally-induced creep. In fact, the roof never became appreciably heated during the testing. The sag was actually due to horizontal thrust caused by expanding pillars on either side of the entry, which in turn were driven by heave and thermal stress development around the canisters in the floor (2). Backfilling and time are two parameters that may significantly alter roof loading mechanisms, and should be considered in future tests.

1. Empson, F. M., R. L. Bradshaw, W. C. McClain, and B. L. Houser, 1969, Results of the Operation of Project Salt Vault: A Demonstration of Disposal of High Level Radioactive Solids in Salt, Proceedings, Third Symposium on Salt, Case Western Reserve Univ., Cleveland, OH, vol. 1, pp. 455-462.

2. Bradshaw, R. G., and W. C. McClain, 1969, Roof-Bolt Test and Application in Supporting a Two-Foot-Thick Roof Bed, Proceedings Third Symposium on Salt, Case Western Reserve, Univ., Cleveland, OH, vol. 2, pp. 466-470.

Office of Nuclear Waste Isolation Test Site
Edgar Mine, Idaho Springs, Colorado

The Office of Nuclear Waste Isolation (ONWI) has sponsored various geotechnical research projects at the Colorado School of Mines (CSM) Experimental Mine, the Edgar Mine, located near Idaho Springs, Colorado, intermittently since the mid-1970's. Heated block tests have been used extensively to characterize the hydrologic-thermal-mechanical response of the isolated rock mass to potential repository environments. The stated objective was to determine "...the usefulness of large-scale field testing in site characterization for an underground nuclear waste repository" (1). Test methods, including block preparation and instrument selection, and specific procedures for data acquisition and analysis were thoroughly evaluated during the field trials. At no time during the initial tests were temperature-elevated rock support studies conducted. Block, borehole, flat-jack grout, and instrument epoxy degradation and failure were also not reported on. Detrimental effects to these items due to thermal loading could not be substantiated through discussions with Mr. Mark Board (1).

Ms. Leslie Sour, a CSM graduate student currently working with ONWI, also noted that no studies specifically related to rock support performance in high temperature environments are presently planned at the CSM-ONWI cooperative test site.

1. Hardin, E.L., M. D. Voegle, M. P. Board, and H. R. Pratt, 1985, Development of a Test Series to determine In Situ Thermomechanical and Transport Properties, included in "Measurement of Rock Properties at Elevated Pressures and Temperatures," ASTM STP 869, H. J. Pincus and E. R. Hoskins, Ed., American Society for Testing and Materials, Philadelphia, pp. 128-153.

Basalt Waste Isolation Project
Rockwell-Hanford Operations
Hanford, Washington

The Basalt Waste Isolation Project (BWIP), Rockwell-Hanford Operations, research site is located near Hanford, Washington, in the south-central portion of the state. The reference repository location lies within the Pasco Basin, a topographic depression in the Columbia Plateau and, more specifically, in the central part of the Cold Creek syncline (1). The Cohassett basalt flow, part of the Grande Ronde Basalt, has been identified as the candidate horizon for the repository. Studies are currently being conducted at a research facility located several miles from the proposed repository site. The facility consists of several exploratory drill holes to the underlying basalt and a near-surface (200 ft depth) research laboratory for in situ rock mass characterization studies. No form of subsurface exploration has been attempted at the reference repository site. The primary goal of projects encompassed within BWIP is to determine the suitability of basalt as a viable waste isolation host rock and to develop the technology required to construct and operate a safe repository at the chosen site.

Interviews with Mr. Dennis Forsberg and Mr. Michael Olson, Rockwell site engineers, revealed that studies concerning rock support have dealt only with market analyses of bolting systems. No studies have evaluated elevated temperatures and rock support performance, however, work has been initiated regarding additional support requirements for heated openings in basalt.

Mr. Nick Barton, Division #1 Director, Norwegian Geotechnical Institute (NGI), and Dr. Kun-Soo Kim, Principal Engineer, Rockwell-Hanford Operations, applied the NGI "Q" system of rock quality classification to the heated basalt environment and determined the additional ground support required to maintain opening stability. Although the conceptual designs formulated by these researchers have not been field tested, Dr. Kim noted that laboratory investigations of the proposed support systems should begin in 1988, with in situ testing following by 1990.

1. Department of Energy, 1986, Environmental Assessment, Reference Repository Location, Hanford Site, Washington, DOE/RW-0070, May, vol. 1, chapter 3.

Rio Blanco Oil Shale Company Operations
Piceance Creek Basin
Rifle, Colorado

Prior to 1980, the Rio Blanco Oil Shale Company owned and operated an in situ retort operation in the C-A tract of the Piceance Creek Basin, near Rifle, Colorado. Mr. Howard Ernest, Mine Manager, stated that two separate underground retorts were burned during the period of mine operation. Access entries, intersecting the periphery of the retort, were supported with 6 ft long split-set bolts. Steel matting was used to supplement the primary support system. Typically, the entries ranged from 16 to 18 ft wide and 10 to 12 ft high, and were used as exhaust drifts during retort burning.

The first retort had no designed provisions for air conditioning, thereby allowing extremely high temperature exhaust gases to infiltrate the access entries, resulting in numerous major roof falls. Although gas temperatures were not measured, Mr. Ernest recalled that roof and rib spalling began between individual bolt installations and progressed until the supports no longer contributed to entry ground stability.

The second retort incorporated an exhaust gas quenching system that dramatically reduced the temperature of the gases escaping through the access entries. Used in conjunction with the quenching system, an unnamed insulating material was applied to the roof, ribs, and floor of the entries between the retort and quench barriers. This combination of

insulating materials and exhaust gas quenching system resulted in an

estimated access entry gas temperature of less than 200°F. Subsequently, no further significant ground control problems were experienced.

Avery Island Salt Mine
Louisiana

The Avery Island salt mine, located off the coast of Louisiana, served as an investigative site for studies regarding the safe storage of high-level nuclear waste in domal salt. Research at the site was conducted by personnel from RE/SPEC Inc., Rapid City, SD, under a subcontract with the Office of Nuclear Waste Isolation (ONWI) as part of the National Waste Terminal Storage (NWTS) Program. The stated purpose of the Avery Island testing program "... was to acquire a field data base to characterize the behavior of domal salt when subjected to an emplaced heat source and to provide data that can be used to verify the numerical models used to predict repository performance (1)." With this in mind, heater tests at Avery Island were designed to compliment previous tests conducted for Project Salt Vault, located in a bedded salt formation near Lyons, Kansas.

Three independent heater tests, employing electric heaters to simulate emplaced waste canisters, were conducted continuously for over 1000 days. Temperature distributions, heat fluxes, roof, rib, and floor displacements, and local stresses were monitored throughout the test period. Dr. Leo VanSambeek, of RE/SPEC Inc., noted that no evaluation of rock support performance was attempted at Avery Island. The heater tests were simply not of sufficient wattage or duration to cause ground stability problems warranting artificial support. This fact is supported by published data indicating a maximum roof-to-floor closure of 1.60 inches and pillar dilation of 1.15 inches occurred over the 1000 day test period immediately adjacent to the heater installations (1). Degradation of the heater emplacement boreholes was not reported on.

1. VanSambeek, L. L., R. G. Stickney, and K. B. DeJong, 1983, Avery Island Heater Tests: Measured Data for 1,000 Days of Heating, RE/SPEC Inc., prepared for Office Nuclear Waste Isolation, Battelle Memorial Institute, Columbus, OH, ONWI-190(5), October, 127 pp.

Waste Isolation Pilot Plant
Carlsbad, New Mexico

The Waste Isolation Pilot Plant (WIPP), located near Carlsbad, New Mexico, was developed by the Department of Energy (DOE) to demonstrate transuranic waste (TRU) disposal and in situ emplacement, testing, and retrieval of high-level waste in bedded salt. Sitting 2150 ft (660 m) below the surface in the Salado evaporite formation, the underground workings are divided into two primary areas: to the north of the shaft station is the high-level waste experimental area and to the south are storage rooms for the permanent disposal of TRU waste. The primary interest of the WIPP facility is the long-term storage of various waste forms generated by U.S. defense programs.

As part of the WIPP Research and Development Program, conducted by personnel of Sandia National Laboratories (SNL), extensive investigations are in progress to determine the behavior of salt subjected to operating repository conditions. Mr. Daryl Munson, SNL, a major contributor to the development of the WIPP high-level waste research program, states that the facility has experienced few, isolated roof-related problems and remains largely unsupported. Roof bolting, though probably unnecessary, is performed only in areas where room stability is critical. He also noted that studies of roof support performance at high temperatures have not been conducted and are not anticipated in the future.

Although high temperature tests have not been conducted, preliminary analyses of premature bolt failures at the WIPP have been reported (1). Laboratory tests on plain carbon steel rock bolts were conducted in

simulated WIPP environments to help determine the failure mode characteristics being experienced at the site. Sustained-load tensile and simple uniaxial tension tests were used to determine the effects a salt environment had on the installed bolts. Loss of ductility through embrittlement by hydrogen absorption was found to be the main contributor to bolt material failure. Three recommendations were cited:

1. Remove cold-worked region from around the rock bolt threads.

2. Apply a protective coating to the bolt prior to installation.

3. Use a "wet" joint (grease or uncured coating) during final installation of the bolt plate and nut.

These measures will help to mitigate environmental effects, however, long-term performance improvements have yet to be demonstrated.

1. Lucas, J. P., 1984, Analysis of Rock Bolt Material Failures at the WIPP Site, Sandia Report SAND 84-0224, NTIS-A03, September, 42 pp.

Canadian Nuclear Fuel Waste Management Program
Pinawa, Manitoba

Limited resources for geoscience research and a concentration of nuclear power development in the Province of Ontario have directed research efforts, under the Canadian Nuclear Fuel Waste Management Program, toward evaluating the potential for long-term waste storage in the plutonic igneous rocks of the Canadian shield. Subsurface investigations are presently being conducted at the Underground Research Laboratory (URL), Pinawa, Manitoba, under the direction of the Whiteshell Nuclear Research Establishment (WNRE), Atomic Energy of Canada Limited (AECC). Of primary interest to researchers at the URL are techniques for large-scale rock mass characterization, radionuclide migration mechanisms, thermal effects on rock mass properties, and potential waste/host rock geochemical interactions.

Mr. Peter Baumgartner, Mining Engineer and Section Head, WNRE, stated that the Canadian approach to waste isolation calls for immediate backfilling of a canister storage room following the emplacement of waste. Canadian law does not provide for canister retrieval at future dates, and, therefore, research regarding elevated temperature effects on roof support is not planned. The URL is situated in a very competent granitic stock and employs a refined smooth-wall blasting technique for drift development. No roof support has been required to date.

Stripa Mine
Orebro, Sweden

The Stripa Mine, located in a massive granite near Orebro, Sweden, is the site of a Swedish-American cooperative research program dedicated to investigating geomechanical, geophysical, hydrological, geochemical, and structural phenomena which may occur during the development and operation of a nuclear waste repository in a large crystalline rock mass. The Swedish Nuclear Fuel Supply Company (SKBF) and the Lawrence Berkeley Laboratory (LBL) began the joint venture in July, 1977, with research in various areas of rock mass characterization continuing today.

Dr. Neville G. W. Cook, a professor at the University of California-Berkeley, and Principal Investigator at the Stripa Mine, commented that although extensive research has been conducted at Stripa to determine the response of the rock mass to high loads and elevated temperatures, no investigations have been performed specifically characterizing roof support performance in a heated environment. He also noted that roof control problems have not occurred during extensive in situ heater tests, effectively eliminating the need to investigate roof support requirements. Dr. Cook has also published related findings concerning the effects of intense jointing at Stripa on entry deformation in elevated temperature environments (1). Thermally-induced displacements proved to be less than those predicted for intact rock based on the theory of thermoelasticity. It was felt that jointing was responsible for the reduced total strain measured. Dr. Cook goes on to state, "Within regions of thermally induced compressive strain part of this strain is taken up by closure of the joint so that the magnitudes of the thermally-induced compressive stresses are

diminished,...". A reduction in stress due to joint deformation is a favorable characteristic of a rock mass subjected to elevated temperatures in terms of retaining ground stability.

Although entry deterioration did not occur during the Stripa Mine heater experiments, severe canister borehole spalling occurred about the full-length periphery of an emplaced 5.0 KW full-scale heater (2). Initial spalling began at the heater midplane, accompanied by increases in canister skin temperatures of 10° to 30°C, owing to an opposition to heat transfer to the borehole wall due to the accumulation of rock chips in the annulus. Progressive spalling continued, eventually raising the canister temperature nearly 100°C. Rock wall temperatures were estimated to range from 300° to 350°C. The occurrence of excessive spalling obviously effects the ability to safely retrieve waste canisters at future dates.

1. Cook, N. G. W., 1983, Effects of Joints on Thermally Induced Displacement and Stresses, Proceedings 24th U.S. Symposium on Rock Mechanics, June, Texas A&M University, College Station, TX, pp. 303-307.

2. Witherspoon, P. A., N. G. W. Cook, and J. E. Gale, 1980, Progress With Field Investigations at Stripa, Swedish-American Cooperative Program on Radioactive Waste Storage in Mined Caverns in Crystalline Rock, Technical Information Report No. 27, February, DOE Contract No. W-7405-ENG-48, NTIS-A04.

SPECIALIST INTERVIEWS

Dr. John F. Abel
Professor of Mining Engineering
Department of Mining Engineering
Colorado School of Mines

Dr. Abel predicts that maintaining the openings of a repository in salt, especially in the range of temperatures expected within the repository environment, will be virtually impossible throughout the repository operations period. The temperature-accelerated creep rates will be such that attempts to negate the resulting entry deformation with conventional roof support will prove futile.

Dr. Abel notes that Stearns-Roger developed conceptual designs of repository layouts for all original Department of Energy test sites. The designs did not include detailed references regarding engineering response to roof control in heated environment. The reports only provided cost estimates, based on support installation patterns, bolt length, anchor type, etc., for conventional bolting practices.

Dr. Tor L. Brekke
Professor of Geological Engineering
Department of Civil Engineering
University of California at Berkeley

Dr. Brekke has no personal experience related to the performance of roof support systems subjected to high temperatures. He was, however, a participant to investigations of ground stability problems associated with underground warm oil storage caverns in Sweden. Apparently, high thermal stresses, resulting from steam pre-heating of the caverns, were responsible for severe collapse problems. The investigations were performed for the Swedish military strategic minerals program, the results of which are not presently available for inspection.

Dr. N. Y. Chang
Professor
Department of Civil Engineering
University of Colorado at Denver

Dr. Chang has done extensive work on the behavior of oil shale subjected to high temperatures; however, these analyses did not include evaluations of the behavior of mine support systems subjected to high temperatures.

Dr. Chang has also worked extensively in the area of earthquake analyses and material response to earthquake action. When designing an underground repository, he believes that it will be very important to not only investigate the dynamic behavior of rock at high temperatures, but also to evaluate material response to earthquake action and determine the relationships between earthquake dynamics and high temperature rock dynamics. The relatively brief, intense shock waves produced by an earthquake may damage or destroy the integrity of an entry and accompanying roof support system. Therefore, it is crucial to investigate the dynamic response of the rock and applied support system to formulate mitigating measures that will ensure the stability of the repository.

For a repository located within a salt horizon, Dr. Chang feels that the geometry of the openings will play a critical role in entry stability. The use of arched versus rectangular openings will help to minimize the detrimental effects of accelerated creep accompanying increasing temperatures.

Dr. Yoginder P. Chugh
Chairman, Department of Mining Engineering
Southern Illinois University at Carbondale

Dr. Chugh states that in deep underground mines where rock temperatures can exceed 145°F, thermal spalling is the primary form of rock failure. As the rock mass is mined and ventilated the rock is sufficiently cooled to cause thermal contraction around the entry periphery, resulting in localized rock failure. Under such conditions, the problem of thermal spalling has been counteracted using steel sets with wooden lagging; a rigid support system that allows for minor yielding during initial support loading.

Dr. Chugh also notes that elevated temperatures, such as those expected in a repository environment, will significantly alter the behavior and material properties of the rock being supported. Specifically, the modulus of elasticity, E, will decrease and Poisson's ratio, v, will increase, indicating an apparent softening of the material. The effects of structural discontinuities in the rock will be diminished as a result of thermal expansion. Loads on any type of support system used in a repository environment will increase at a greater rate due to temperature-induced creep acceleration. Temperature-induced creep will initiate at low absolute and differential stress values and result in greater total creep displacements. Non-linear, inelastic behavior will dominate both physical properties and geometric aspects of the rock mass, complicating related time-dependent analyses. Anisotropic behavior of the rock mass will be affected to varying degrees depending on the orientation of loading to the anisotropic plane.

Simply bolting the rock in a repository will not sufficiently protect entries from spalling. Increasing temperatures within the repository will continually alter the physical characteristics of the rock mass; spalling due to thermal expansion will occur as long as temperature gradients are changing. A partial solution is to incorporate screen, straps, or pans with the bolts to minimize spalling. Circular openings will help to minimize creep rates.

Dr. Chugh also recommends that since confining stress reduces creep, roof support should probably be added soon after mining. However, ground reaction curves, used for roof support selection, should be developed to determine optimum timing of support installation.

Dr. Richard Goodman
Professor of Geological Engineering
Department of Civil Engineering
University of California at Berkeley

Although Dr. Goodman has not personally investigated temperature effects on roof support performance, he was involved in a consulting project in San Francisco that examined the characteristics of a railway tunnel subjected to a fire. The periphery of the tunnel, located in a serpentine deposit, had lost all load-carrying capability due to temperature-induced dehydration. Dr. Goodman could not provide details of the investigation, but he noted that it may be of relative importance to evaluate the dehydration characteristics of any material used to host a nuclear waste repository.

Mr. Richard Hine
Celtite, Inc.
Grand Junction, Colorado

Mr. Hine obtained experience with rock bolting in high temperature retort environments at the Occidental Oil Shale Project, located near Meeker, Colorado. Resin-grouted bolts were installed in the immediate entries around the Occidental retort. During retorting, the air temperatures in the entries exceeded 2000°F. Examination of the bolts on completion of the retort burn revealed that the resin remained intact five to six inches past the exposed plate end of the bolts. Apparently, the resin near the plates had melted due to excessive heat. Mr. Hine emphasized that the oil shale probably acted as a tremendously large heat sink and rapidly dissipated the extreme heat from the entries as it progressed through the shale. Therefore, the behavior of rock bolts exposed to blast heating may be far different from that of a bolt subjected to a more uniformly heated rock mass.

Dr. Earl R. Hoskins
Professor and Head of Department of Geophysics
Texas A & M University

Dr. Hoskins noted temperature-related ground support problems being experienced at the Mount Isa Mine in Australia. Sulfide reactions occurring in the rock generate wall rock temperatures of up to 150°F. Ground stability problems, apparently due to thermal spalling and decreased rock integrity, have forced mine operators to switch from stoping methods to block caving. He was unable to provide additional details regarding these problems and has had no other personal experience concerning the effects of elevated temperature on roof support.

Dr. William Pariseau
Professor
Department of Mining Engineering
University of Utah

The only roof support systems used in heated underground environments that Dr. Pariseau is aware of are in mines such as the Burgin No. 2 silver mine, Sunshine Mining Co., Dividend, Utah, where rock temperatures can exceed 125° F. To his knowledge, roof support does not appear to be affected by the higher temperatures.

Dr. Pariseau stated that the use of point-anchored roof bolts may, however, be ineffective in a heated repository environment. Bolt holes may actually expand in an elastic material due to increasing temperature, thereby rendering a bolt anchor useless, especially if the bolt is secured in a relatively cool rock mass and is then subject to a large, increasing temperature gradient. This may also hold true for resin-grouted bolts; cured resins have low tensile strengths and may not withstand significant hole expansion.

For inelastic materials such as salt, a bolt hole may expand upon heating, however, the accelerated creep would tend to close the hole; the net effect being a relatively unchanged hole diameter. This in no way implies, however, that salt is the best material for bolting in a repository environment. Excessive creep in salt may render rock-anchored support systems ineffective.

Mr. Thomas Peeso
General Manager, Western Division
Celtite, Inc.
Grand Junction, Colorado

Mr. Peeso stated that temperature effects on the performance of roof bolts installed with polyester resin have been investigated by several organizations. First, an article written by R. L. W. Beveridge noted that polyester resin grouts provide superior resistance to deformation in high temperature applications.[1] When compared to epoxy resin grouts, polyester resins remained dimensionally stable to 450° F, whereas epoxy resins became dimensionally unstable above temperatures ranging from 200° to 250° F. The article indicated that polyester resin is a more viable grout material in an elevated temperature environment, such as that expected in a nuclear waste repository.

A second study reporting the variation of polyester resin with increasing temperature, performed by personnel of Celtite (Selfix) Ltd., Derby, England, indicated that reductions in strength of polyester resin anchors subjected to temperatures up to 80°C were considered insignificant. However, reference strength data at 120°C revealed a 47 percent strength loss over that reported at 80°C. Additional tests of polyester resin anchors subjected to fires indicated that burning occurred only at the exposed surface of the resin at the collar of the hole. As a result, "the charred composition resulting from this burning provided an ablative coating to the bulk of the resin, effectively protecting the resin from further combustion." It was concluded by Celtite, England, " . . . in a fire situation the proximal end of the anchor is in a sense sacrificial,

[1]Beveridge, R. L. W. Resin Anchors. Civil Engineering, Aug. 1986

and that the load is carried by a sufficient length of anchor at the distal end which is at or below 80°C.

The results from tests performed by personnel at the Fosroc Construction Chemicals, Ltd., Research Laboratory, England[2], indicated that one particular mix of polyester resin anchor grout was so temperature independent that bolt failure actually preceded resin degradation at high temperatures. The resin anchored bolts evaluated remained competent to temperature extremes of 310° to 440°C, with shear load tests having indicated bolt failure prior to failure of the resin. Fosroc safety standards state that, for a similar polyester resin grout studied, the pull-out performance was considered adequate for conditions under 100°C, and that the pull-out resistance of the grout would remain significant to 200°C.

[2]Haigh, J. G. FOSROC Research Laboratory Report, unpublished, date unknown.

Mr. Jean-Francois Raffoux
Mining Engineer
Deputy Director of Mining and Safety Research
CERCHAR
Verneuil-en-Halatte, France

According to Mr. Raffoux, CERCHAR personnel have performed and are currently performing studies, in cooperation with the French Waste Isolation Project, involving underground heater tests and opening deformation characterizations. Although no studies regarding the effects of temperature on support system performance have been conducted to date, roof bolt resin setting times versus temperature were investigated at CERCHAR several years ago. Results of this work could not be located prior to release of this document.

Dr. Miklos Salamon
Department Head
Department of Mining Engineering
Colorado School of Mines

Dr. Salamon has 23 years of South African deep mine experience, and has seen no investigations specifically evaluating temperature effects on roof support systems. He is aware of studies documenting thermal stresses as possible contributing factors to rib and back spalling in deep stopes, and estimates there are no significant detrimental effects on conventional rock bolts when subjected to rock temperatures reaching 150°F. However, he adds that temperature fluctuations may result in a loss of bolt tension at lower temperatures. He has had no experience with the behavior of rock support when subjected to temperatures expected in a nuclear waste repository environment.

Dr. Salamon comments that temperatures in rock types with which he is familiar, such as quartzite, lava flows, and extremely competent shales, may range from 40° to 65°C prior to mining. Excavation and ventilation may reduce exposed rock temperatures to 25° to 30°C. Cyclic ventilation not only affects thermal stresses in the opening periphery, but also promotes wetting and drying processes. Mitigating the effects of ventilation in a repository will be most difficult in highly fractured or inelastic ground.

Dr. Shosei Serata
President, Serata Geomechanics, Inc.
Richmond, California

Dr. Serata has researched a quantitative approach to stabilizing underground mine openings by designing the geometry and timing of underground excavations to allow formation of stress envelopes surrounding the openings. In this approach, stress concentrations are relocated away from multiple-entry boundaries, resulting in more stable entry systems requiring less artificial support and remaining functional much longer than "conventional" openings. He asserts that this method of stress control is applicable to all three proposed repository rock types.

Dr. Serata cautions that while the stress control method of permanent roof support is effective, conventional roof support systems could enhance permanent roof support and control minor spalling resulting from increased temperatures.

Dr. Knostanty F. Unrug
Professor
Department of Mining Engineering
University of Kentucky

Dr. Unrug states that, to the best of his knowledge, no documented research has been performed in the area of temperature effects on roof support system performance.

From his personal experience in "hot" European mines, where steel arches are the predominant means of entry support and air conditioning is used to maintain relatively cool temperatures and a workable environment, he recalls mining personnel gave no consideration to adverse temperature effects on roof support.

Dr. Unrug anticipates that the expected high repository temperatures will contribute greatly to poor ground conditions. He supports research concerning alternatives to using excessive roof support. The use of ventilation and heat exchange technology to limit rock temperature thresholds throughout the repository operations period is an area of research deserving more attention.

Mr. William G. Wood
Vice President and Director of Safety and Industrial Hygene
Magma Mine
Superior, Arizona

Mr. Wood stated that although the Magma mine is experiencing roof control problems, these problems have yet to be directly related to elevated temperatures in the mine. The copper ore and matrix rock is highly fractured, and succeptable to simple gravity-initiated spalling. However, the rate of spalling may be accelerated due to a thermal differential at the rock-opening interface. As the mine is ventilated, the rock may be sufficiently cooled to contract, thereby reducing frictional stability within fracture zones. However, this hypothesis has not been investigated, and thus it cannot be concluded that the elevated temperature of the rock contributes to ground control problems in the mine. The virgin rock temperature was not specified.

Several well-noted researchers in the fields of geomechanics and underground excavation were consulted in addition to those already referenced. Although they were unaware of past, current, or planned investigations directly addressing the effects of elevated temperature on rock support system performance, each recognized the complexity of the problem and recommended that research commence immediately as the results will directly impact the safe day-to-day operation of the repository.

Those interviewed include:

Dr. Bernard Amadei
Assistant Professor
Department of Civil, Environmental, and Architectural Engineering
University of Colorado

Dr. Z. T. Bieniawski
Professor and Director of Mining and Mineral Resources Research Institute
Pennsylvania State University

Mr. Mark Board
ITASCA Consulting Group
Minneapolis, Minnesota

Dr. Jaak Daemen
Associate Professor
Department of Mining and Geological Engineering
University of Arizona

Dr. Charles Fairhurst
Department Head
Department of Civil and Mineral Engineering
University of Minnesota

Dr. Ian W. Farmer
Professor
Department of Mining and Geological Engineering
University of Arizona

Dr. Zbigniew Hladysz
Associate Professor
Department of Mining Engineering
South Dakota School of Mines and Technology

Dr. William F. Kane
Assistant Professor
Department of Civil Engineering
University of Tennessee

Dr. Michael Karmis
Professor of Mining Engineering
Department of Mining and Minerals Engineering
Virginia Polytechnical Institute

Dr. Louis Panek
Senior Staff Engineer (Retired)
U. S. Bureau of Mines

Dr. Duk-Won Park
Associate Professor
Department of Mineral Engineering
University of Alabama

Dr. Syd S. Peng
professor and Chairman
Department of Mining Engineering
West Virginia University

Dr. E. Tinceliu
Ecole des Mines des Paris
Paris, France

Dr. Wolfgang Wawersik
Supervisor, Geomechanics Division #1542
Sandia National Laboratories
Albuquerque, New Mexico