Westinghouse

Westinghouse Electric Company
Nuclear Plant Projects
P.O. Box 355
Pittsburgh, Pennsylvania 15230-0355
USA

October 2, 2002

AW-02-1557

Document Control Desk
U.S. Nuclear Regulatory Commission
Washington, DC 20555

ATTENTION: Mr. Lawrence Burkhart

APPLICATION FOR WITHHOLDING PROPRIETARY INFORMATION FROM PUBLIC DISCLOSURE

SUBJECT: Transmittal of Westinghouse Proprietary Class 2 and Non-Proprietary Class 3 versions of Document: "AP1000 Design Certification Review – Responses to Requests for Additional Information"

Dear Mr. Burkhart:

The application for withholding is submitted by Westinghouse Electric Company, LLC ("Westinghouse") pursuant to the provisions of paragraph (b)(1) of Section 2.790 of the Commission's regulations. It contains commercial strategic information proprietary to Westinghouse and customarily held in confidence.

The proprietary material for which withholding is being requested is identified in the proprietary version of the subject documents. In conformance with 10 CFR Section 2.790, Affidavit AW-02-1557 accompanies this application for withholding setting forth the basis on which the identified proprietary information may be withheld from public disclosure.

Accordingly, it is respectfully requested that the subject information which is proprietary to Westinghouse be withheld from public disclosure in accordance with 10 CFR Section 2.790 of the Commission's regulations.

Correspondence with respect to this application for withholding or the accompanying affidavit should reference AW-02-1557 and should be addressed to the undersigned.

Very truly yours,

M. M. Corletti

M. M. Corletti
Passive Plant Projects & Development
AP600 & AP1000 Projects

/Enclosures

2907alf.doc

AW-02-1557

COMMONWEALTH OF PENNSYLVANIA:

ss

COUNTY OF ALLEGHENY:

Before me, the undersigned authority, personally appeared James W. Winters, who, being by me duly sworn according to law, deposes and says that he is authorized to execute this Affidavit on behalf of Westinghouse Electric Company, LLC ("Westinghouse"), and that the averments of fact set forth in this Affidavit are true and correct to the best of his knowledge, information, and belief:

James W. Winters, Manager
Passive Plant Projects & Development
Nuclear Plant Projects
Westinghouse Electric Company, LLC

Sworn to and subscribed
before me this 2ND day
of October, 2002

Lorraine M. Piplica
Notary Public

LORRAINE M. PIPLICA
COMMONWEALTH OF PENNSYLVANIA
NOTARY PUBLIC

Notarial Seal
Lorraine M. Piplica, Notary Public
Monroeville Boro, Allegheny County
My Commission Expires Dec. 14, 2003
Member, Pennsylvania Association of Notaries

(1) I am Manager, Passive Plant Projects & Development, in the Nuclear Plant Projects Business Unit, of the Westinghouse Electric Company LLC ("Westinghouse"), and as such, I have been specifically delegated the function of reviewing the proprietary information sought to be withheld from public disclosure in connection with nuclear power plant licensing and rulemaking proceedings, and am authorized to apply for its withholding on behalf of the Westinghouse Electric Company, LLC.

(2) I am making this Affidavit in conformance with the provisions of 10 CFR Section 2.790 of the Commission's regulations and in conjunction with the Westinghouse application for withholding accompanying this Affidavit.

(3) I have personal knowledge of the criteria and procedures utilized by the Westinghouse Electric Company, LLC in designating information as a trade secret, privileged or as confidential commercial or financial information.

(4) Pursuant to the provisions of paragraph (b)(4) of Section 2.790 of the Commission's regulations, the following is furnished for consideration by the Commission in determining whether the information sought to be withheld from public disclosure should be withheld.

(i) The information sought to be withheld from public disclosure is owned and has been held in confidence by Westinghouse.

(ii) The information is of a type customarily held in confidence by Westinghouse and not customarily disclosed to the public. Westinghouse has a rational basis for determining the types of information customarily held in confidence by it and, in that connection, utilizes a system to determine when and whether to hold certain types of information in confidence. The application of that system and the substance of that system constitutes Westinghouse policy and provides the rational basis required.

Under that system, information is held in confidence if it falls in one or more of several types, the release of which might result in the loss of an existing or potential competitive advantage, as follows:

(a) The information reveals the distinguishing aspects of a process (or component, structure, tool, method, etc.) where prevention of its use by any of Westinghouse's competitors without license from Westinghouse constitutes a competitive economic advantage over other companies.

(b) It consists of supporting data, including test data, relative to a process (or component, structure, tool, method, etc.), the application of which data secures a competitive economic advantage, e.g., by optimization or improved marketability.

(c) Its use by a competitor would reduce his expenditure of resources or improve his competitive position in the design, manufacture, shipment, installation, assurance of quality, or licensing a similar product.

(d) It reveals cost or price information, production capacities, budget levels, or commercial strategies of Westinghouse, its customers or suppliers.

(e) It reveals aspects of past, present, or future Westinghouse or customer funded development plans and programs of potential commercial value to Westinghouse.

(f) It contains patentable ideas, for which patent protection may be desirable.

There are sound policy reasons behind the Westinghouse system which include the following:

(a) The use of such information by Westinghouse gives Westinghouse a competitive advantage over its competitors. It is, therefore, withheld from disclosure to protect the Westinghouse competitive position.

(b) It is information which is marketable in many ways. The extent to which such information is available to competitors diminishes the Westinghouse ability to sell products and services involving the use of the information.

(c) Use by our competitor would put Westinghouse at a competitive disadvantage by reducing his expenditure of resources at our expense.

(d) Each component of proprietary information pertinent to a particular competitive advantage is potentially as valuable as the total competitive advantage. If competitors acquire components of proprietary information, any one component may be the key to the entire puzzle, thereby depriving Westinghouse of a competitive advantage.

(e) Unrestricted disclosure would jeopardize the position of prominence of Westinghouse in the world market, and thereby give a market advantage to the competition of those countries.

(f) The Westinghouse capacity to invest corporate assets in research and development depends upon the success in obtaining and maintaining a competitive advantage.

(iii) The information is being transmitted to the Commission in confidence and, under the provisions of 10 CFR Section 2.790, it is to be received in confidence by the Commission.

(iv) The information sought to be protected is not available in public sources or available information has not been previously employed in the same original manner or method to the best of our knowledge and belief.

The proprietary information sought to be withheld in this submittal is that which is appropriately marked in Attachment 1 as Proprietary Class 2 in the Westinghouse document DCP/NRC1557 for submittal to the Commission: (1) "AP1000 Design Certification Review – Response to Requests for Additional Information."

This information is being transmitted by Westinghouse's letter and Application for Withholding Proprietary Information from Public Disclosure, being transmitted by Westinghouse Electric Company (W letter AW-02-1557) and to the Document Control Desk, Attention: Lawrence Burkhart, DIPM/NRLPO, MS O-4D9A.

This information is part of that which will enable Westinghouse to:

(a) Provide documentation supporting determination of APP-GW-GL-700, "AP1000 Design Certification Document," analysis on a plant specific basis

(b) Provide the applicable engineering evaluation which establishes the Tier 2 requirements as identified in APP-GW-GL-700.

Further this information has substantial commercial value as follows:

(a) Westinghouse plans to sell the use of similar information to its customers for purposes of meeting NRC requirements for Licensing Documentation.

(b) Westinghouse can sell support and defense of AP1000 Design Certification.

Public disclosure of this proprietary information is likely to cause substantial harm to the competitive position of Westinghouse because it would enhance the ability of competitors to provide similar methodologies and licensing defense services for commercial power reactors without commensurate expenses. Also, public disclosure of the information would enable others to use the information to meet NRC requirements for licensing documentation without purchasing the right to use the information.

The development of the technology described in part by the information is the result of applying the results of many years of experience in an intensive Westinghouse effort and the expenditure of a considerable sum of money.

In order for competitors of Westinghouse to duplicate this information, similar technical programs would have to be performed and a significant manpower effort, having the requisite talent and experience, would have to be expended for performing and analyzing tests.

Further the deponent sayeth not.

DCP/NRC1527
Docket No. 52-006

October 2, 2002

Attachment 1

List of Westinghouse's Responses to RAIs Transmitted in DCP/NRC1527

ATTACHMENT 1

Table 1 "List of Westinghouse's Responses to RAIs Transmitted in DCP/NRC1527"				
210.001	210.002	210.003	210.004	210.005
210.006	210.007	210.008	210.009	210.010
210.013	210.014	210.015	210.016	210.017
210.018	210.020	210.021	210.022	210.023
210.024	210.025	210.026	210.029	210.030
210.031	210.032	210.033	210.034	210.035
210.036	210.037	210.038	210.039	210.040
210.041	210.043	210.044	210.045	210.046
210.047	210.048	210.049	210.050	210.051
210.052	210.053	210.054	210.055	210.056
210.057	210.061	210.066	252.009	260.001
260.003	261.001	261.002	261.003	261.004
261.008	420.003	420.004	420.006	420.007
420.009	420.010	420.011	420.021	420.023
420.024	420.027	420.030	420.032	420.033
420.034	420.035	420.036	420.037	420.038
420.040	420.041	420.042	435.001	435.002
435.003	435.004	435.005	435.006	435.007
435.008	435.009	435.010	435.011	435.012
435.013	435.014	435.015	440.011	440.012
440.013	440.014	440.016	440.017	440.018
440.019	440.023	440.024	440.027	440.028
440.029	440.030	440.031	440.032	440.033
440.034	440.037	440.038	440.039	440.042
440.044	440.047	440.049	440.050	440.051
440.052	440.058	440.059	440.060	440.064
440.065	440.068	440.071	440.073	440.075
440.076	440.077	440.078	440.079	440.083
440.084	440.085	440.086	440.087	440.088
440.089	440.090	440.093	440.094	440.095
440.107	440.110	440.111	440.112	440.113
440.116	440.118	440.121	440.123	440.124
440.126	440.132	440.134	440.135	440.136
440.137	440.139	440.140	440.141	440.142
440.143	440.144	440.145	440.146	440.149
440.150	440.167	471.001	471.002	471.003
471.004	471.006	471.008	471.010	472.001
472.002	472.003	620.001	620.002	620.003
620.004	620.005	620.006	620.007	620.009
620.010	620.011	620.012	620.013	620.014
620.015	620.016	620.017	620.019	620.020
620.021	620.022	620.023	620.024	620.027
620.028	620.030	620.033	620.035	620.036
620.037	620.038	620.039	620.040	620.041
620.042	620.043	720.001	720.004	720.007
720.011	720.014	720.016	720.019	720.020
720.034	720.076			

DCP/NRC1527
Docket No. 52-006

October 2, 2002

Attachment 3

"AP1000 Design Certification Review –
Response to Request for Additional Information"

AP1000 DESIGN CERTIFICATION REVIEW

Response to Request For Additional Information

RAI Number: 210.001

Question:

Reference, Volume 6, Section 3.9.2.3, Dynamic Response Analysis of Reactor Internals under Operational Flow Transients and Steady-State Conditions, Pg. 3.9-31, last paragraph:

Westinghouse (W) proposes that the assessment of RPV internals flow-induced vibrational response is done using a combination of analysis and testing, as specified in Regulatory Guide (R.G.) 1.20. However, W also proposes that the entire vibration assessment program, including the predictive analysis portion, will be performed by the Combined License (COL) applicant. This proposal is repeated in DCD Section 3.9.8.1 (Volume 6, Pg. 3.9-93) citing consistency with R.G. 1.20 as a basis for deferral of the performance of the entire vibration assessment program to the COL applicant.

The NRC staff is not in complete agreement with this proposal for the following reasons. Title 10 of the Code of Federal Regulations (10 CFR) Part 52.47(a)(2) requires that applications for standard design certification must contain a level of design information sufficient to enable the Commission to reach a final conclusion on all safety questions associated with the design before the certification is granted. Delaying the predictive analysis portion of the vibration assessment program to the COL applicant stage of plant construction does not provide the staff with a level of design information sufficient to reach a final conclusion regarding adequacy of the RPV internals design. Conformance with R.G. 1.20 alone, does not necessarily fulfill the requirements of 10 CFR 52.47(a)(2) for certification of the adequacy of the standard design of the RPV internals, primarily because the R.G. 1.20 scheduling requirements for the submittal of analytical results to the staff occurs much too late to support the standard design certification process.

The staff's position on this issue is that the detailed, predictive analysis portion of the RPV internals flow-induced vibration analysis program should be provided for staff review during the design certification process, and not be deferred to the COL applicant stage of actual plant construction. It is recognized that the other phases of the comprehensive R.G. 1.20 vibration assessment program, i.e., vibration measurement and physical inspection, must be done later by the COL applicant to confirm the predictive analysis results. However, the staff considers the results of the predictive analysis phase of this program to be the kind of detailed information necessary for the staff to make a determination of adequacy of the AP1000 RPV internals design for purposes of final design certification.

Please provide technical documentation of the predictive analysis phase of the vibration assessment program. The technical details should be provided with descriptions of the analytical methods used including computer models, results of the analyses summarized in tabular format, and comparisons of calculated stresses to ASME Code allowables for the major components of the RPV internals design. An example of the presentation of the type of analytical data requested is W topical report WCAP-14761, "AP600 Reactor Internals Flow-Induced Vibration Assessment Program." This type of topical report would also be appropriate for presentation of key details of the AP1000 prototype RPV internals design necessary for staff review at the standard design certification stage.

Westinghouse Response:

A flow-induced vibration assessment of the AP1000 reactor vessel internals will be performed and the results will be documented in an AP1000 Vibration Assessment Report which will be provided to the NRC to support AP1000 Design Certification. This report will be similar in scope to WCAP-14761, "AP600 Reactor Internals Flow-Induced Vibration Assessment Program". The predictive analysis portion of the reactor vessel internals flow-induced vibration analysis program will be included in the report.

The AP1000 Vibration Assessment Report (WCAP-15949) will be referenced in DCD Section 3.9.2.3 and will be included in the Referenced Material list in DCD Table 1.6-1.

The reactor internals vibration assessment will be deleted from the Combined License Information in DCD Section 3.9.8.1 and from the Combined License Information listed in DCD Table 1.8-2.

Design Control Document (DCD) Revision:

From DCD page 3.9-31:

3.9.2.3 Dynamic Response Analysis of Reactor Internals under Operational Flow Transients and Steady-State Conditions

The vibration characteristics and behavior due to flow-induced excitation are complex and not readily ascertained by analytical means alone. Assessment of vibrational response is done using a combination of analysis and testing. Comparisons of results obtained from reference plant vibration measurement programs have been used to confirm the validity of scale model tests and other prediction methods as well to confirm the adequacy of reference plant internals regarding flow induced vibration. The flow-induced vibration assessment **is documented in WCAP-15949 (Reference 18).**~~will be performed by the Combined License applicant.~~

From DCD Page 3.9-92:

3.9.8 Combined License Information

3.9.8.1 Reactor Internals Vibration Assessment and Predicted Response

~~The flow-induced vibration assessment of the reactor internals will be performed by the Combined License applicant. The assessment will be consistent with the guidelines of Regulatory Guide 1.20.~~ Information including predicted vibration response and allowable response will be provided prior to the preoperational vibration testing of the first AP1000 consistent with the guidance of Regulatory Guide 1.20.

From DCD page 3.9-94, Section 3.9.9 References:

18. **"AP1000 Reactor Internals Flow Induced Vibration Assessment Program," WCAP-15949-P (Proprietary) and WCAP-15949-NP (Non-proprietary), November 2002.**

From DCD page 1.6-5, Table 1.6-1:

Table 1.6-1 (Sheet 4 of 20)

MATERIAL REFERENCED

DCD Section Number	Westinghouse Topical Report Number	Title
3.8	WCAP-13891	AP600 Automatic Depressurization System Phase A Test Data Report, May 1994
	WCAP-14324	Final Data Report for ADS Phase B1 Tests, April 1995
	WCAP-15613	AP1000 PIRT and Scaling Assessment, March 2001
3.9	WCAP-7765-AR	Westinghouse PWR Internals Vibrations Summary Three-Loop Internals Assurance, November 1973
	WCAP-8766 (P) WCAP-8780	Verification of Neutron Pad and 17x17 Guide Tube Designs by Preoperational Tests on the Trojan 1 Power Plant, May 1976
	WCAP-8516-P (P) WCAP-8517	UHI Plant Internals Vibrations Measurement Program and Pre- and Post-Hot Functional Examinations, March 1975
	WCAP-10846 (P)	Doel 4 Reactor Internals Flow-Induced Vibration Measurement Program, March 1985
	WCAP-10865 (P) WCAP-10866	South Texas Plant (TGX) Reactor Internals Flow-Induced Vibration Assessment, February 1985
	WCAP-8708-P-A (P) Volumes 1 and 2 WCAP-8709-A Volumes 1 and 2	MULTIFLEX A FORTRAN-IV Computer Program for Analyzing Thermal-Hydraulic-Structure System Dynamics, February 1976
	WCAP-8446 (P) WCAP-8449	17x17 Drive Line Components Tests - Phase 1B 11, 111 D-Loop Drop and Deflection, December 1974
	WCAP-9693 (P)	Investigation of Feedwater Line Cracking in Pressurized Water Reactor Plants, June 1980
	WCAP-15949-P (P) **WCAP-15949-NP**	**AP1000 Reactor Internals Flow Induced Vibration Assessment Program, November 2002**

(P) Denotes Document is Proprietary

From DCD page 1.8-12, Table 1.8-2:

Table 1.8-2 (Sheet 2 of 6)

SUMMARY OF AP1000 STANDARD PLANT COMBINED LICENSE INFORMATION ITEMS

Item No.	Subject	Subsection
2.5-13	Subsurface Instrumentation	2.5.4.6.11
2.5-14	Stability of Slopes	2.5.5
2.5-15	Embankments and Dams	2.5.6
3.3-1	Wind and Tornado Site Interface Criteria	3.3.3
3.4-1	Site-Specific Flooding Hazards Protective Measures	3.4.3
3.5-1	External Missile Protection Requirements	3.5.4
3.6-1	Pipe Break Hazards Analysis	3.6.4.1
3.6-2	Leak-Before-Break Evaluation of as-Designed Piping	3.6.4.2
3.6.3	Leak-Before-Break Evaluation of as-Built Piping	3.6.4.3
3.7-1	Seismic Analysis of Dams	3.7.5.1
3.7-2	Post-Earthquake Procedures	3.7.5.2
3.7-3	Seismic Interaction Review	3.7.5.3
3.7-4	Reconciliation of Seismic Analyses of Nuclear Island Structures	3.7.5.4
3.7-5	Seismic Analyses of Nuclear Island Structures at Soil Sites	3.7.5.5
3.8-1	Containment Vessel Design Adjacent to Large Penetrations	3.8.6.1
3.8-2	Passive Containment Cooling System Water Storage Tank Examination	3.8.6.2
3.8.3	Design Summary Reports - Structures	3.8.6.3
3.8-4	As-Built Summary Report	3.8.6.4
3.9-1	**Reactor Internal Vibration Response**	**3.9.8.1**
3.9-2	Design Specification and Reports	3.9.8.2
3.9-3	Snubber Operability Testing	3.9.8.3
3.9-4	Valve Inservice Testing	3.9.8.4
3.9-5	Surge Line Thermal Monitoring	3.9.8.5
3.9-6	Piping Benchmark Program	3.9.8.6
3.10-1	Experience-Based Qualification	3.10.6

3.11-1	Equipment Qualification File	3.11.5
4.2-1	Changes to Reference Reactor Design	4.2.5

PRA Revision:

None

AP1000 DESIGN CERTIFICATION REVIEW

Response to Request For Additional Information

RAI Number: 210.002

Question:

Reference, Volume 6, Section 3.9.2.3, Pg. 3.9-33, second paragraph:

The DCD refers to vibration test results of other reactor internals designs (Doel 3, Doel 4, and Paluel 1) that will be utilized to perform the AP1000 flow-induced vibration assessment program, proposing that this will all be done at some future time.

Please include these existing vibration test results in comparison to the results of the predictive analysis requested in RAI 210.1 above.

Westinghouse Response:

A flow-induced vibration assessment of the AP1000 reactor vessel internals will be performed and the results will be documented in an AP1000 Vibration Assessment Report which will be provided to the NRC to support AP1000 Design Certification. This report will be similar in scope to WCAP-14761, "AP600 Reactor Internals Flow-Induced Vibration Assessment Program". A comparison of the existing vibration test results and analysis results will be included in the report.

Design Control Document (DCD) Revision:

See Response to RAI 210.001.

PRA Revision:

None

AP1000 DESIGN CERTIFICATION REVIEW

Response to Request For Additional Information

RAI Number: 210.003

Question:

Reference, Volume 6, Section 3.9.2.3, Pg. 3.9-33:

The discussion in the lower half of this page (beginning with the fourth paragraph) highlights specific differences in the AP1000 RPV internals design compared to previous W reactor designs.

Please provide technical data which demonstrate that, in fact, these AP1000 design differences have been evaluated analytically, and result in a design configuration for the RPV internals with acceptable vibration levels when compared to appropriate allowable values for component stress and deflection.

Westinghouse Response:

A flow-induced vibration assessment of the AP1000 reactor vessel internals will be performed and the results will be documented in an AP1000 Vibration Assessment Report which will be provided to the NRC to support AP1000 Design Certification. This report will be similar in scope to WCAP-14761, "AP600 Reactor Internals Flow-Induced Vibration Assessment Program". The results of the AP1000 reactor vessel internals vibration analyses will be included in the report.

Design Control Document (DCD) Revision:

See Response to RAI 210.001.

PRA Revision:

None

AP1000 DESIGN CERTIFICATION REVIEW

Response to Request For Additional Information

RAI Number: 210.004

Question:

Reference, Volume 6, Section 3.9.2.3, Pgs. 3.9-34 and -35:

These pages include discussions which are informative and useful for introductory purposes, but are highly speculative in terms of demonstrating adequacy of the RPV internals design. A technical safety evaluation for purposes of approving / certifying the AP1000 internals design cannot be based solely on these types of general expectations. This further emphasizes the need for a topical report similar to WCAP-14761 (see RAI 210.1 above).

Please provide additional discussion, including analytical results compared to appropriate allowable values, which can be used to develop conclusions of adequacy based on an analytical process.

Westinghouse Response:

A flow-induced vibration assessment of the AP1000 reactor vessel internals will be performed and the results will be documented in an AP1000 Vibration Assessment Report which will be provided to the NRC to support AP1000 Design Certification. This report will be similar in scope to WCAP-14761, "AP600 Reactor Internals Flow-Induced Vibration Assessment Program". The vibration analysis results of the AP1000 reactor vessel internals will be included in the report.

Design Control Document (DCD) Revision:

See Response to RAI 210.001.

PRA Revision:

None

AP1000 DESIGN CERTIFICATION REVIEW

Response to Request For Additional Information

RAI Number: 210.005

Question:

Reference, Volume 6, Section 3.9.2.3, Pg. 3.9-34, fifth paragraph:

The third sentence of this paragraph includes the term "the key elevation." Please explain further the meaning of this term in the context of the discussion of inlet nozzle coolant velocity, and the resulting effects on core barrel response to the fluid forcing function.

Westinghouse Response:

In this context "key" is referring to the lower radial support keys. Therefore, "the key elevation" means the elevation of the lower radial support keys. These keys are located at the lower core support plate and their function is to align the lower internals. This location is evaluated when assessing the internals flow-induced vibration because, due to the decrease in flow area, the fluid velocity at the elevation of the keys is increased over that in the downcomer.

Design Control Document (DCD) Revision:

From DCD Page 3.9.34:

The core barrel outside diameter and inside diameter and the reactor vessel inside diameter are the same as the tested three-loop plants. The core barrel length is 11 inches longer (~6%). Although the AP1000 coolant velocity at the inlet nozzle is higher, the coolant velocity at the **elevation of the lower radial support** keys ~~elevation~~ is approximately the same compared to previous three-loop plants. The coolant velocity in the downcomer annulus between the core barrel and the reactor vessel wall is lower in the AP1000 design than in previous three-loop plants because the AP1000 has no thermal shield or neutron pads in the annulus to restrict this flow.

PRA Revision:

None

AP1000 DESIGN CERTIFICATION REVIEW

Response to Request For Additional Information

RAI Number: 210.006

Question:

Reference, Volume 6, Section 3.9.2.3, Pg. 3.9-35, first paragraph:

This paragraph is an example of the kind of general expectations / conclusions that require analytical verification for purposes of design certification. A recognized specific difference in the AP1000 lower internals design produces a lower natural frequency of the internals assembly, resulting in higher estimated amplitudes of vibration. The stated expectation is that these higher displacements of the internals assembly will be acceptable, but no further technical justification for this expectation is provided. The discussion which follows suggests that the internals vibration frequencies and amplitudes will be accurately determined based on the instrumentation measurements during pre-operational testing of the first plant (but this obviously will not occur until the plant has been built).

Please provide results of a predictive analysis to conservatively quantify the frequencies and displacements of the internals assembly resulting from enveloping estimates of forcing functions due to operational flow transients. The resulting component stresses and deflections should be compared to applicable allowable values to justify any conclusions of adequacy of the AP1000 RPV internals standard design.

Westinghouse Response:

A flow-induced vibration assessment of the AP1000 reactor vessel internals will be performed and the results will be documented in an AP1000 Vibration Assessment Report which will be provided to the NRC to support AP1000 Design Certification. This report will be similar in scope to WCAP-14761, "AP600 Reactor Internals Flow-Induced Vibration Assessment Program".

The frequencies and displacements of the AP1000 reactor will be predicted using analyses that are supported by test data. For these predictions, refined analytical models of reference designs and the AP1000 design will be prepared. For broadband flow turbulence excitation, the mean flow and/or vibration responses predicted for the reference designs using the analysis models will be compared to responses measured during preoperational testing of the reference designs. The reference designs will be a 3XL reactor (14-foot core) for the lower internals and a 3 loop standard reactor (12-foot core) for the upper internals.

The forcing functions that provided reasonable agreement with the test data of the reference designs will then be modified to reflect differences between the reference and the AP1000 designs and the flow turbulence induced responses of the AP1000 design will be calculated.

For heatup, cooldown and reactor coolant pump startup and coastdowns, the internals responses to flow turbulence excitation are expected to be less than those at full reactor power since pump power will be controlled so that it is not greater than that at full temperature. Therefore, with constant pump power, the higher fluid densities at lower temperatures will result in lower flow velocities. Since the turbulence excitations are velocity raised to a power greater than one, the loads for the full power condition are expected to bound those at lower temperatures. Since the excitation is broadband, the variations of structural natural frequency with temperature are not expected to be a large factor.

Oscillatory forces due to postulated vortex shedding from the structures below the lower core support plate and fluidelastic excitation of the components of the upper internals will also be evaluated, although responses of these components due to these excitations have never been observed in previous test results.

Reactor coolant pump speed-related excitations will be evaluated for a range of pump rotation speeds and coolant temperatures since both parameters can change the relationships between a) reactor internals structural natural frequencies, b) acoustic natural frequencies in the primary coolant and c) harmonics of the pump rotation speed.

Responses due to the above excitations will be combined and the stresses produced will be compared to high cycle fatigue allowable stresses.

Design Control Document (DCD) Revision:

See Response to RAI 210.001.

PRA Revision:

None

AP1000 DESIGN CERTIFICATION REVIEW

Response to Request For Additional Information

RAI Number: 210.007

Question:

Reference, Volume 6, Section 3.9.2.3, Pg. 3.9-35, fifth paragraph:

This paragraph indicates that the AP1000 reactor coolant pumps, although lower in rated horsepower, operate at a higher rotational speed than reactor coolant pumps in previous plant designs. Please include the effects of the reactor coolant pump flow-induced vibration in the predictive analysis requested in RAI 210.6 above.

Westinghouse Response:

A flow-induced vibration assessment of the AP1000 reactor vessel internals will be performed and the results will be documented in an AP1000 Vibration Assessment Report which will be provided to the NRC to support AP1000 Design Certification. This report will be similar in scope to WCAP-14761, "AP600 Reactor Internals Flow-Induced Vibration Assessment Program". The effects of the reactor coolant pump flow-induced vibration in the predictive analysis will be included in the report.

Design Control Document (DCD) Revision:

See Response to RAI 210.001.

PRA Revision:

None

AP1000 DESIGN CERTIFICATION REVIEW

Response to Request For Additional Information

RAI Number: 210.008

Question:

Reference, Volume 6, Section 3.9.2.4, Pre-operational Flow-Induced Vibration Testing of Reactor Internals, Pg. 3.9-35, seventh paragraph:

The three aspects, or phases, of a R.G. 1.20 pre-operational vibration assessment test program are appropriately identified. However, the first phase, i.e., a prediction of the vibrations of the reactor internals, although specifically identified, is never really presented in detail anywhere in the following discussion of the overall program. Please provide additional description of the vibration analysis phase of the program, including results of the predictive analysis requested in RAI 210.1 above. Alternatively, provide a reference to the topical report (similar to WCAP-14761) which contains the RPV internals vibration analysis for the AP1000 prototype design.

Westinghouse Response:

A flow-induced vibration assessment of the AP1000 reactor vessel internals will be performed and the results will be documented in an AP1000 Vibration Assessment Report which will be provided to the NRC to support AP1000 Design Certification. This report will be similar in scope to WCAP-14761, "AP600 Reactor Internals Flow-Induced Vibration Assessment Program". A description of the AP1000 reactor vessel internals vibration analysis, including results, will be included in the report.

Design Control Document (DCD) Revision:

See Response to RAI 210.001.

PRA Revision:

None

AP1000 DESIGN CERTIFICATION REVIEW

Response to Request For Additional Information

RAI Number: 210.009

Question:

Reference, Volume 6, Section 3.9.2.4, Pg. 3.9-36, last paragraph:

Please provide clarification of the following statement regarding visual inspection of RPV internals before and after hot functional testing:

> "This inspection is performed on AP1000 plants subsequent to the first."

Does this imply that the first plant built is excluded from these inspections? If so, why would the prototype plant be excluded from inspection?

Westinghouse Response:

The intent is that the inspection of the reactor vessel internals would be performed for both the first unit and all subsequent units. This is stated explicitly in the third paragraph on page 3.9-36:

> "The pre-operational test program of the first AP1000 plant includes a limited vibration measurement program and a pre- and post-hot functional inspection program."

Design Control Document (DCD) Revision:

From DCD Pages 3.9.35-36

The pre-operational test program of the first AP1000 plant includes a limited vibration measurement program and a pre- and post-hot functional inspection program. This program satisfies the guidelines for a Regulatory Guide 1.20 Prototype Category plant. AP1000 plants subsequent to the first plant will also be subject to the pre- and post-hot functional inspection program. The program for plants subsequent to the first plant satisfies the guidelines for a Non-Prototype Category IV plant.

The acceptance standard for the vibration predictions is established and related to the ASME Code allowables for long term steady-state conditions.

During the hot functional test, the internals are subjected to a total operating time at greater than normal full-flow conditions of at least 240 hours. This provides a cyclic loading of greater than 10^6 cycles on the main structural elements of the internals. In addition, there is some operating time with one, two, or three pumps operating.

Instrumentation is designed and installed to measure the vibration of the internals during hot functional testing. The instrumentation includes devices attached to reactor vessel internals to measure component strains and accelerations.

Since the most notable differences with previously tested designs are in the lower internals, the instrumentation is concentrated on the lower internals. In particular, instrumentation is provided to verify that the incorporation of a core shroud does not cause an unacceptable vibration and to confirm that the flow-induced vibration of the vortex suppression plate is acceptable.

Inspection before and after the hot functional test serves to confirm that the internals are functioning correctly. This inspection is performed on **both the first and all subsequent** AP1000 plants ~~subsequent to the first~~. When no indications of harmful vibrations or signs of abnormal wear are detected and no apparent structural changes take place, the core support structures are considered to be structurally adequate and sound for operation. If such indications are detected, further evaluation is required.

The testing and inspection plan of the first plant includes features with emphasis on the areas outlined below. The visual inspection plan also applies to plants subsequent to the first.

PRA Revision:

None

AP1000 DESIGN CERTIFICATION REVIEW

Response to Request For Additional Information

RAI Number: 210.010

Question:

Reference, Volume 6, Section 3.9.2.4, Pg. 3.9-38, second paragraph:

This is a continuation of the DCD approach that verification of acceptability of expected RPV internals vibration levels can be deferred to the pre-operational / hot functional test phase of plant construction. While the final verification of acceptability may, in fact, be most specifically demonstrated at that time by use of actual instrumented test data, the deferral of predictive analysis is not compatible with the need for this type of technical data for the design certification process. 'Expected' vibration levels have to be quantified at some point in the process. The discussion in DCD Section 3.9.2.5.1.2 indicates that the AP1000 RPV internals are represented in detailed analytical models which can be used to analyze the dynamic characteristics of the internals response to various hydraulic forcing functions. The staff considers the analytical results of this type of predictive analysis to be the kind of detailed information necessary for the staff to make a determination of adequacy of the AP1000 RPV internals design for purposes of final design certification.

Please provide analytical results of the predictive analysis phase of the R.G. 1.20 vibration assessment program for staff review. See also RAI 210.1 and RAI 210.6.

Westinghouse Response:

A flow-induced vibration assessment of the AP1000 reactor vessel internals will be performed and the results will be documented in an AP1000 Vibration Assessment Report which will be provided to the NRC to support AP1000 Design Certification. This report will be similar in scope to WCAP-14761, "AP600 Reactor Internals Flow-Induced Vibration Assessment Program". The results of the predictive analysis of the AP1000 reactor vessel internals vibration levels will be included in the report.

Design Control Document (DCD) Revision:

See Response to RAI 210.001.

PRA Revision:

None

AP1000 DESIGN CERTIFICATION REVIEW

Response to Request For Additional Information

RAI Number: 210.013

Question:

Reference, Volume 6, Section 3.9.2.6, Correlation of Reactors Internals Vibration Tests with the Analytical Results, Pg. 3.9-41, first paragraph:

The results of dynamic analysis of reactor internals vibration (used for comparison to test results) are generally mentioned, but it is not clearly defined which reactor design was used to generate the analytical results. Please provide additional information for the reactor design used to obtain the dynamic analysis results, the reference plants providing preoperational vibration testing data, and an evaluation of the applicability of the data comparisons to validation of the AP1000 prototype design.

Westinghouse Response:

The results of preoperational testing in reference plants are compared to results from analytical models of the reference plant reactor vessel internals. This comparison verifies that the analytical modeling techniques provide appropriate results.

A flow-induced vibration assessment of the AP1000 reactor vessel internals will be performed and the results will be documented in an AP1000 Vibration Assessment Report which will be provided to the NRC to support AP1000 Design Certification. This report will be similar in scope to WCAP-14761, "AP600 Reactor Internals Flow-Induced Vibration Assessment Program". The report will include the reference plant analytical results, comparison of these results to the reference plant preoperational vibration test data, and a discussion of the validity of the AP1000 models based on the reference plant evaluations.

Design Control Document (DCD) Revision:

See Response to RAI 210.001.

PRA Revision:

None

AP1000 DESIGN CERTIFICATION REVIEW

Response to Request For Additional Information

RAI Number: 210.014

Question:

Reference, Volume 6, Section 3.9.2.6, Pg. 3.9-41, first paragraph:

A conclusion of adequacy regarding the analytical model is stated without providing, or referencing, any analytical results to demonstrate adequacy. Please provide a summary of results to justify conclusions which would establish the analytical model as a benchmark for future analyses.

Westinghouse Response:

A flow-induced vibration assessment of the AP1000 reactor vessel internals will be performed and the results will be documented in an AP1000 Vibration Assessment Report which will be provided to the NRC to support AP1000 Design Certification. This report will be similar in scope to WCAP-14761, "AP600 Reactor Internals Flow-Induced Vibration Assessment Program". The report will include a description of the analytical model used in the analyses and an evaluation to demonstrate the adequacy of the model.

Design Control Document (DCD) Revision:

See Response to RAI 210.001.

PRA Revision:

None

AP1000 DESIGN CERTIFICATION REVIEW

Response to Request For Additional Information

RAI Number: 210.015

Question:

Reference, Volume 6, Section 3.9.5.1.1, Lower Core Support Assembly, Pg. 3.9-77, second paragraph:

The discussion states that in this design the core barrel is modeled as a beam. Please provide additional description of the core barrel design analysis, addressing in particular, the support type specified as the design basis, i.e., plate-and-shell type, or linear type as defined in American Society of Mechanical Engineers (ASME) Boiler & Pressure Vessel Code, Section III (ASME III), Subsection NF, and the stability criteria used in addition to allowable stress criteria. Additionally, for other RPV internal structures subjected to compressive loading, e.g., support columns, specify the stress and stability criteria used for the design analysis.

Westinghouse Response:

The context of the paragraph in question describes the characteristics of the reactor internals and its modeling considerations. The beam supported at its top and bottom relates to the submodel of the Reactor Vessel Lower Internals shown in DCD Figure 3.9-2 and its evaluation during the seismic and LOCA events. This modeling feature is described in section 3.9.2.5.1.2. The Lower Core Support Assembly, section 3.9.5.1.1, is part of the core support structures located within the reactor pressure vessel. These Core Support Structures (CSS) are evaluated to subsection NG of the ASME Boiler and Pressure Vessel code (not subsection NF). The support types, i.e. plate-and-shell, or linear type, defined in paragraph NF-1212 and NF-1213 are descriptive of components of Subsection NF. Subsection NG addresses Core Support Structures, defined in paragraph NG-1121, and Internal Structures, defined in NG-1122.

For other RPV internal structures classified as Core Support Structures that are subjected to compressive loading, the stability criteria and stability evaluations are addressed by Subsection NG-3211C of Section III of the ASME Boiler and Pressure Vessel Code.

Design Control Document (DCD) Revision:

None

PRA Revision:

None

AP1000 DESIGN CERTIFICATION REVIEW

Response to Request For Additional Information

RAI Number: 210.016

Question:

Reference, Volume 6, Section 3.9.5.1.1, Pg. 3.9-77, fourth paragraph:

The discussion mentions energy absorbing devices which limit dynamic forces imposed on the RPV, and also limit displacement of the core. Please provide additional description of the energy absorbing devices, and explanation of how they can function to limit applied forces (presumably by allowing large displacement), while also limiting displacements of the reactor core to maintain alignment of the core to facilitate control rod insertion.

Westinghouse Response:

The energy absorbing devices limit applied forces by becoming 'plastic' and yielding (in tension) upon load application. They are also designed so that after yielding, a positive stop is provided to ensure no further elongation and to maintain control rod alignment with the fuel assemblies.

See the response to RAI 210.026 for a clarifying figure and description of the secondary core support.

Design Control Document (DCD) Revision:

None

PRA Revision:

None

AP1000 DESIGN CERTIFICATION REVIEW

Response to Request For Additional Information

RAI Number: 210.017

Question:

Reference, Volume 6, Section 3.9.5.2, Design Loading Conditions, Pg. 3.9-79:

Please indicate how the potential effects of thermal stratification in the RPV and in attached piping are accounted for in the design of the RPV internals.

Westinghouse Response:

The potential for thermal stratification in the design of the reactor pressure vessel and internals is considered in the design during those few operating conditions when stratification could occur.

AP1000 Technical Specifications require reactor coolant pump operation, and thus forced circulation flow through the reactor vessel, when the plant is operating in Modes 1 through 5. In Modes 1 and 2, all four reactor coolant pumps must be operating (DCD Section 16.1, LCO 3.4.4). In Modes 3, 4, and 5 a Technical Specification (DCD Section 16.1, LCO 3.4.9) requires that a minimum flow be maintained through the core, with at least one reactor coolant pump operating. During these five modes of operation forced flow conditions exist, and fluid velocities in the reactor vessel are sufficiently high to preclude thermal stratification. The lowest fluid velocities occur in the upper head. Studies have been performed and measurements taken which indicate that the flow pattern in the upper head regions of plants with spray nozzles--like AP1000--is a momentum-dominated circulation rather than a buoyancy-driven stratification. Since AP1000 has spray nozzle flow rates that are higher than those of typical plants and drain holes in the upper support plate, this momentum-dominant circulation pattern characterizes AP1000 as well. Therefore, during operation in Modes 1 through 5, thermal stratification is not an issue for the reactor vessel components.

Thermal stratification could occur in the reactor vessel during passive core cooling system operation and natural circulation cooldown. Thermal stratification in the reactor vessel is considered by performing a thermal/flow analysis using computational fluid dynamics techniques (See DCD Section 5.3.4.1). This analysis provides temperature maps that are used to evaluate thermal stresses. Stress analysis proves that the vessel is in compliance with the fatigue and stress limits of the ASME Code, Section III.

For a discussion of how thermal stratification in attached piping is accounted for, see the responses to RAIs 210.048, 210.049, and 210.050.

AP1000 DESIGN CERTIFICATION REVIEW

Response to Request For Additional Information

Design Control Document (DCD) Revision:

None

PRA Revision:

None

AP1000 DESIGN CERTIFICATION REVIEW

Response to Request For Additional Information

RAI Number: 210.018

Question:

Reference, Volume 6, Section 3.9.5.2.3, Level D Service Conditions, Pg. 3.9-79:

Please define the specific pipe breaks which cannot be excluded from dynamic analysis as a result of application of mechanistic pipe break (leak-before-break) criteria.

Westinghouse Response:

Piping less than a nominal 6" diameter cannot be excluded from dynamic analysis as a result of application of mechanistic pipe break criteria. The 4" diameter piping is therefore the largest that cannot be excluded. In the AP1000, the 4" Class 1 lines are the pressurizer spray and first stage automatic depressurization valve lines.

Design Control Document (DCD) Revision:

None

PRA Revision:

None

AP1000 DESIGN CERTIFICATION REVIEW

Response to Request For Additional Information

RAI Number: 210.020

Question:

Reference, Volume 6, Section 3.9.5.3, Design Bases, Pg. 3.9-80:

Please define which components of the RPV internals assembly are designated as ASME III Class CS core support structures.

Westinghouse Response:

There are two major subassemblies that comprise the RPV internals assembly:

1. The lower internals assembly which defines the geometric boundaries of the core region and physically supports the fuel assemblies.

2. The upper internals assembly which contains the Rod Control Cluster Assemblies and provides alignment with the fuel assemblies for reactivity control.

Certain components of these assemblies locate or transmit loads from the fuel assemblies and are designated ASME III Class CS core support structures.

The following lower internals components are designated as Class CS core support structures:

- Core barrel assembly (flange and cylindrical shell)
- Lower core support plate and fuel alignment pins
- Lower radial restraint system (keys and clevis inserts)

The following upper internals components are designated as Class CS core support structures:

- Upper support assembly (flange, plate and cylindrical skirt)
- Upper support columns
- Upper core plate and fuel alignment pins
- Upper core plate alignment pins (and clevis inserts)

Design Control Document (DCD) Revision:

None

PRA Revision:

None

AP1000 DESIGN CERTIFICATION REVIEW

Response to Request For Additional Information

RAI Number: 210.021

Question:

Reference, Volume 6, Section 3.9.5.3, Pg. 3.9-80:

For those components designated ASME III Class CS core support structures, please provide a specific commitment that they are designed, fabricated, and examined in accordance with the requirements of ASME III, Subsection NG, Core Support Structures. Also for Class CS core support structures, provide a statement that the design documentation for these components includes a certified Design Specification, and a certified Design Report conforming to the requirements of ASME III, Subsection NCA.

For those RPV internals components not designated ASME III Class CS core support structures, please identify the design basis used for design, construction, and examination.

Westinghouse Response:

The components designated as ASME III Class CS core support structures will be designed, fabricated and examined in accordance with the requirements of ASME III, Subsection NG for Core Support Structures. The design documentation for these Class CS core support structures will include a certified Design Specification and a certified Design Report conforming to the requirements of ASME III, Subsection NCA.

The basis used for design, construction, and examination for those RPV internals components not designated ASME III Class CS core support structures will be to the ASME III, Subsection NG requirements for Internals Structures.

The Core Shroud assembly in the AP1000 is similar to that in current Combustion Engineering plants and is designated as an Internals Structure per ASME III, Subsection NG.

Design Control Document (DCD) Revision:

From DCD Page 3.9-78

3.9.5.3 Design Bases

The reactor vessel internals components designated as ASME III Class CS core support structures are designed, fabricated and examined in accordance with the requirements of ASME III, Subsection NG for Core Support Structures. The design documentation for these Class CS core support structures include a certified Design Specification and a certified Design Report conforming to the requirements of ASME III,Subsection NCA.

The basis used for design, construction, and examination for those reactor vessel internals components not designated ASME III Class CS core support structures are the ASME III, Subsection NG requirements for Internals Structures.

The scope of the stress analysis requires many different techniques and methods, both static and dynamic. The analysis performed depends on the mode of operation.

PRA Revision:

None

AP1000 DESIGN CERTIFICATION REVIEW

Response to Request For Additional Information

RAI Number: 210.022

Question:

Reference, Volume 6, Section 3.9.5.3.1, Mechanical Design Bases, Pg. 3.9-80:

The fourth bullet states that, "The core internals are designed to withstand mechanical loads arising from the safe shutdown earthquake and to meet the requirements of the following item." The term "following item" is not clearly defined any further. Please provide additional explanation of what is meant by, "requirements of the following item."

Westinghouse Response:

The "following item" is the next bullet which states:

- "The reactor has mechanical provisions which are sufficient to adequately support the core and internals and to maintain the core intact with acceptable heat transfer geometry following transients arising from abnormal operating conditions."

This bullet will be indented to clearly show that it is a sub-item.

Design Control Document (DCD) Revision:

From DCD Page 3.9.77-78:

- The core internals are designed to withstand mechanical loads arising from the safe shutdown earthquake and to meet the requirements of the following item.

  The reactor has mechanical provisions which are sufficient to adequately support the core and internals and to maintain the core intact with acceptable heat transfer geometry following transients arising from abnormal operating conditions.

PRA Revision:

None

AP1000 DESIGN CERTIFICATION REVIEW

Response to Request For Additional Information

RAI Number: 210.023

Question:

Reference, Volume 6, Table 3.9-14:

The component terms "upper barrel" and "upper package" are listed in this table for maximum allowable deflections. The physical locations and functions of these components are not clear from the arrangement drawings and discussions provided elsewhere in the DCD. Please provide additional arrangement details, e.g., in Figure 3.9-8, Reactor Internals Interface Arrangement, for clarification.

Westinghouse Response:

The terms "upper barrel" and "upper package" describe various regions where displacement criteria are imposed on the design of the reactor internals (core support structures). The "upper barrel" is the core barrel above the upper core plate. The displacement of the "upper package" refers to the relative vertical movement between the upper core plate and upper support plate. The displacement criteria in Table 3.9-14 are in addition to the stress criterion that is identified in subsection NG of section III of the ASME Boiler and Pressure Vessel Code. The upper barrel inward and outward displacement limitations are further described in DCD section 3.9.5.3.2. The upper package deflection limitation is further described in the same section.

Table 3.9-14 will be modified to more clearly identify that the radial deflections are associated with the upper core barrel and to provide a specific definition of the "upper package" deflection.

The upper core barrel and upper core plate will be identified in DCD Figure 3.9-8.

Design Control Document (DCD) Revision:

From DCD page 3.9-119:

Table 3.9-14

MAXIMUM DEFLECTIONS ALLOWED FOR REACTOR INTERNAL SUPPORT STRUCTURES

Component	Allowable Deflections (in.)
Upper ~~barrel~~Core Barrel	
Radial outward	4.1
Radial outward (uniform)	1.0
Radial outward (non-uniform)	< 10 % of annulus area
Upper package – relative vertical motion between upper core plate and upper support plate	0.20
Rod cluster guide tubes	1.00

From DCD page 3.9-177, Figure 3.9-8:

See attached figures for changes.

PRA Revision:

None

Figure From AP1000 DCD Revision 2

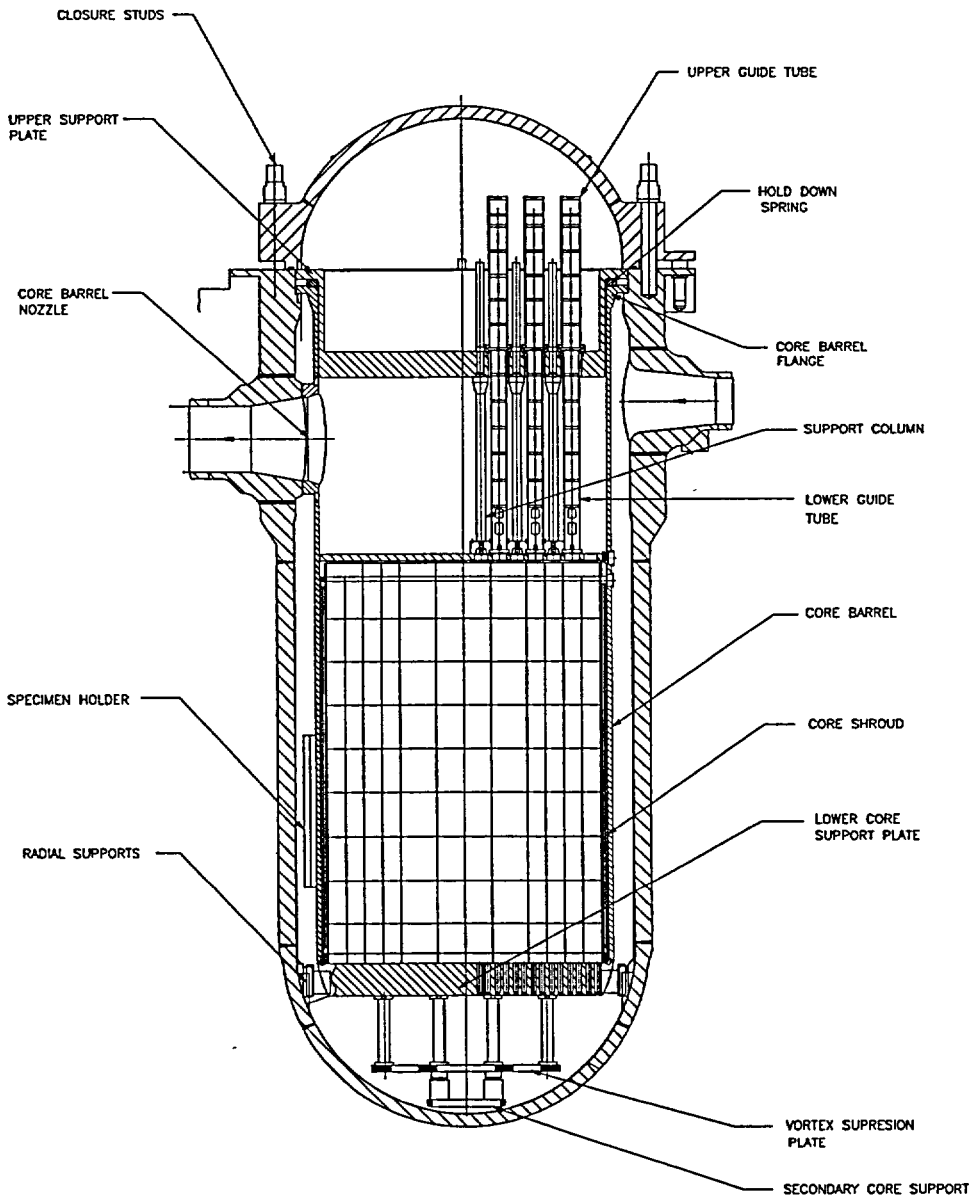

Figure 3.9-8

Reactor Internals Interface Arrangement

Revised Figure

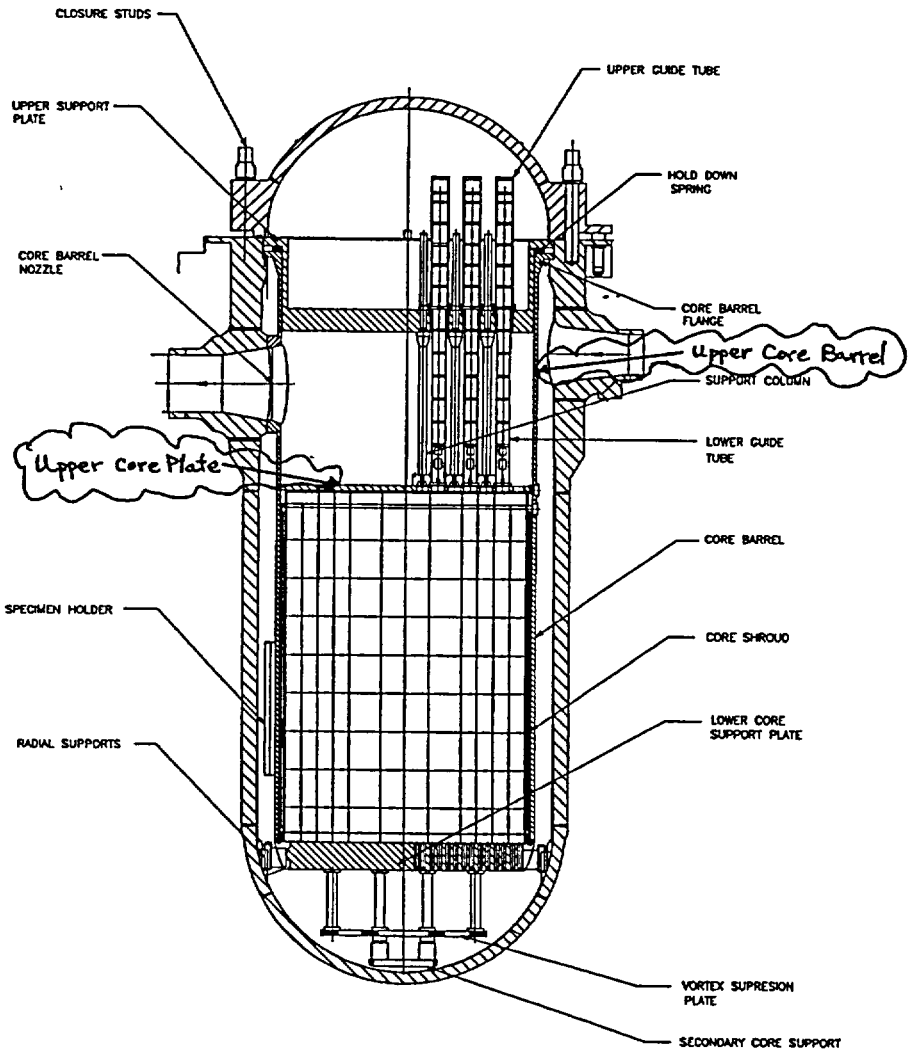

Figure 3.9-8

Reactor Internals Interface Arrangement

AP1000 DESIGN CERTIFICATION REVIEW

Response to Request For Additional Information

RAI Number: 210.024

Question:

Reference, Volume 6, Table 3.9-14:

The maximum allowable deflection for the secondary core supports is not specified in Table 3.9-14 (see discussion of energy-absorbing devices in Section 3.9.5.1.1, Lower Core Support Assembly).

Westinghouse Response:

The maximum deflection of the secondary core support is discussed in DCD section 3.9.5.3.2, and is approximately 0.6 inch. This is in addition to the approximately 0.5 inch free fall (through the 0.5 inch hot gap) between the bottom of the secondary core support to the bottom inside surface of the Pressure Vessel. The total vertical displacement is limited by a) the hot gap between the bottom of the secondary core support plate and the inside surface of the reactor vessel, plus b) the dimension of the positive stop, which limits vertical displacement during a core drop.

See the response to RAI 210.026 for a clarifying picture and description of the secondary core support.

The secondary core support exists to address a hypothetical, beyond design basis accident. The deflection limits in DCD Table 3.9-14 are the deflection limits to augment the stress limits of the ASME code and are for the faulted condition evaluation. The hypothetical severe accident addressed by the secondary core support, is not recognized as any of the level A, B, C or D conditions described in section 3.9.5.2, and therefore this deflection limit is not included in Table 3.9-14.

The hot gap dimension between the secondary core support and the bottom inside surface of the pressure vessel given in DCD section 3.9.5.3.2 will be corrected from 0.9 to 0.5 inch.

Design Control Document (DCD) Revision:

From DCD page 3.9-80, section 3.9.5.3.2:

The criteria for the postulated core drop accident are based on analyses that determine the total downward displacement of the internal structures, following a hypothetical core drop resulting from loss of the normal core barrel supports. The initial clearance between the secondary core support structures and the reactor vessel lower head in the hot condition is approximately 0.~~9~~5 inch. An additional displacement of approximately 0.6 inch would occur from the strain of the energy-absorbing devices of the secondary core support. Therefore, the total drop distance is about 1.~~5~~1 inches. That distance is less than the distance that permits the tips of the rod cluster control assembly to come out of the guide thimble in the fuel assemblies.

PRA Revision:

None

AP1000 DESIGN CERTIFICATION REVIEW

Response to Request For Additional Information

RAI Number: 210.025

Question:

Reference, Volume 6, Section 3.9.5.3.2, Allowable Deflections, Page 3.9-81:

The last paragraph of this section presents a brief description of the function of the secondary core supports assuming failure of the primary core supports. The stated assumption of complete and instantaneous failure of the primary core support structure appears to be conservative in terms of maximizing the energy imparted to the secondary core supports due to a vertical drop of the core. This assumption would appear to result in a completely vertical drop with no off-axis rotation of the core producing uniform strain in all four energy absorbing devices simultaneously. How would the secondary core supports function in the event of a partial, non-uniform failure of the primary core supports resulting in potentially vertical plus rotational displacement of the core? Could rotational plus vertical displacement of the core prevent complete insertion of the control rods?

Westinghouse Response:

The vertical support to the core is mainly carried through the core barrel shell up to the internals support ledge in the reactor vessel flange. Throughout the full range of vertical motion of the drop of the core (approximately one inch), the lower section of the core barrel is maintained in alignment with the reactor vessel through the lower radial support keys attached between the core barrel and the reactor vessel. These radial keys have a vertical dimension of over 8 inches of vertical length. The length of the fuel assembly alignment pins is such that the fuel assemblies also do not lose their alignment to the core plate during this event. Also the engagement of the upper core plate pins (>2 inch) also is maintained through this small vertical drop. With these alignments maintained between the major components, and with the control rods remaining within the thimbles, rotations and adverse vertical displacements are prevented and will not prevent complete insertion of the control rods. In the event of a partial failure of the primary core support, (such as a tear), the dropping or free fall of the core would not be as severe as the instantaneous break considered and therefore complete rod insertion will not be prevented.

Design Control Document (DCD) Revision:

None

PRA Revision:

None

AP1000 DESIGN CERTIFICATION REVIEW

Response to Request For Additional Information

RAI Number: 210.026

Question:

Reference, Volume 6, Section 3.9.5.3.2, Page 3.9-81:

The functional description of the secondary core supports indicates that the kinetic energy resulting from the postulated core drop accident is absorbed by tensile deformation. Please provide additional secondary core support arrangement details sufficient to illustrate how the energy absorbing material is loaded in tension.

Westinghouse Response:

The energy absorbing material is loaded in tension by use of three concentric cylinders. During a hypothetical accident, the outer and inner cylinders remain elastic while loaded in compression and the middle cylinder yields while loaded in tension. The following figure depicts a representative sketch of one of the four secondary core supports. As indicated in the cross-section of half of the sub-assembly, there are three different cross hatched areas. These three cross-hatched areas represent three concentric cylindrical types of components. The complete assembly of the secondary core support (four of these units plus a base plate) is indicated in DCD Figure 3.9-8. During a hypothetical accident, with a loss of the normal core support and a drop of the core, the secondary core support would drop and contact in the inside surface of the reactor pressure vessel bottom head. The outer and inner cylinder (both cross-hatched in the same direction) would be under compressive load. The other cylinder (the middle cylinder located between the outer and inner and cross-hatched in the opposite direction) would be under tension. The middle component under tension has a "necked' down area which is designed to yield during this hypothetical accident. The positive stop is provided when the middle cylinder flange comes in contact with the base plate and there is direct support onto the vessel bottom head.

b,c

Design Control Document (DCD) Revision:

None

PRA Revision:

None

AP1000 DESIGN CERTIFICATION REVIEW

Response to Request For Additional Information

RAI Number: 210.029

Question:

Reference, Volume 6, Table 3.9-9, Pg. 3.9-107:

Under the column heading labeled "Core Supports," there appears to be typographical errors in some of the references to the ASME Code Sections for Service Levels C and D. Please confirm that the reference listed as NG-3324 should be NG-3234 for Service Level C, and the reference listed as NG-3335 should be NG-3235 for Service Level D.

Westinghouse Response:

The ASME Code Sections referenced in DCD Table 3.9-9 in the "Core Supports" column should be NG-3234 for Service Level C, and NG-3235 for Service Level D.

DCD Table 3.9-9 will be revised to correct these two typographical errors.

Design Control Document (DCD) Revision:

See attached Table 3.9-9 from DCD page 3.9-106

PRA Revision:

None

Table 3.9-9

STRESS CRITERIA FOR ASME CODE SECTION III
CLASS 1 COMPONENTS[a] AND SUPPORTS AND CLASS CS CORE SUPPORTS

Design/Service Level	Vessels/Tanks Pumps	Piping (h)	Core Supports	Valves, Disks & Seats	Components Supports [c,d]
Design and Service Level A	ASME Code, Section III NB-3221, 3222	ASME Code, Section III NB-3652, Equation 9	ASME Code, Section III NG-3221, 3222, 3231, 3232	ASME Code, Section III NB-3520, 3525	ASME Code, Section III Subsection NF (e)
Service Level B (Upset)	ASME Code, Section III NB-3223	ASME Code, Section III NB-3654, Equation 9	ASME Code, Section III NG-3223, 3233	ASME Code, Section III NB-3525	ASME Code, Section III Subsection NF (e)
Service Level C (Emergency)	ASME Code, Section III NB-3224	ASME Code, Section III NB-3655, Equation 9	ASME Code, Section III NG-3224, ~~3324~~3234	ASME Code, Section III NB-3526	ASME Code, Section III Subsection NF (e)
Service Level D (Faulted)	ASME Code, Section III (see Chapter 3.9.1.4) NB-3225 (no active Class 1 pumps used)	ASME Code, Section III NB-3656, Equation 9	ASME Code, Section III (see chapter 3.9.1) NG-3225, ~~3335~~3235	(b) (g)	ASME Code, Section III Subsection NF, (e) (see Chapter 3.9.1) (f)

AP1000 DESIGN CERTIFICATION REVIEW

Response to Request For Additional Information

RAI Number: 210.030

Question:

American Society of Mechanical Engineers Code (ASME Code) cases used in the AP1000 design and analysis are listed in Table 5.2-3 of the DCD. Please identify the specific Code cases that are applicable that will be used in the design and analysis of the piping systems, including piping components and associated supports.

Westinghouse Response:

The ASME Code Cases that are applicable for use in the design and analysis of the AP1000 piping and supports are summarized below:

N-122-2 Stress Indices for Integral Structural Attachments Section III, Division 1, Class 1

N-318-5 Procedure for Evaluation of the Design of Rectangular Cross Section Attachments on Class 2 and 3 Piping Section III Division 1

N-319-3 Alternate Procedure for Evaluation of Stresses in Butt Welding Elbows in Class 1 Piping Section III, Division 1

N-391-2 Procedure for Evaluation of the Design of Hollow Circular Cross Section Welded Attachments on Class 1 Piping Section III, Division 1

N-392-3 Procedure for Evaluation of the Design of Hollow Circular Cross Section Welded Attachments on Class 2 and 3 Piping Section III, Division 1

These code cases are identified Table 5.2-3 of the AP1000 DCD.

Design Control Document (DCD) Revision:

None

PRA Revision:

None

AP1000 DESIGN CERTIFICATION REVIEW

Response to Request For Additional Information

RAI Number: 210.031

Question:

Section 3.9.3 of the DCD states that the design specifications and design reports will be completed by the combined license (COL) applicant or his agent. It also states that design specifications for ASME Class 1, 2, and 3 components and piping are prepared utilizing procedures that meet the ASME Code. Please provide these procedures and discuss the differences between the AP600 and AP1000 design for staff review.

Westinghouse Response:

Chapter 17 of the AP1000 DCD provides the discussion of the Quality Assurance requirements and procedures applicable to AP1000 design. The applicable Quality Assurance procedures for the preparation of design specifications for ASME Class 1, 2, and 3 components and piping are the same for both AP600 and AP1000. These procedures were made available to the NRC staff for review at the meetings held on September 9th through the 11th at the Westinghouse office.

Design Control Document (DCD) Revision:

None

PRA Revision:

None

AP1000 DESIGN CERTIFICATION REVIEW

Response to Request For Additional Information

RAI Number: 210.032

Question:

Section 3.9.3 does not provide any information on the completion status for the large bore piping design and analysis. The DCD does not clearly describe where DAC will be defined and used. Please identify the specific piping systems.

Westinghouse Response:

A proposed AP1000 Piping Design Acceptance Criteria (DAC) was provided to the NRC for discussion in a meeting between the NRC and Westinghouse held on July 17th, 2002. Both the format and content of the proposed AP1000 DAC are similar to the format used in the System 80+ Design Control Document (DCD) and approved by the NRC.

The proposed AP1000 DAC will be included in the AP1000 DCD in the introduction section as identified on the following page. The scope of the DAC includes all piping systems in the AP1000.

Design Control Document (DCD) Revision:

Table 1-1
Index of AP1000 Tier 2 Information Requiring NRC Approval of Change

Item	Expiration at First Full Power	Tier 2 Reference
Piping Design Analysis Criteria (DAC)	**Yes**	**Table 1-2**

Table 1-2
Piping Design Acceptance Criteria

Commitment	ADM Reference
ASME Code and Code Cases for AP1000 piping and pipe support design	**Table 1-1, Table 3.9-10, 5.2.1.1, 5.2.1.2, Table 5.2-3**
Analysis Methods; experimental stress analysis, independent support motion, inelastic analysis, small-bore piping, non-seismic / seismic interaction, buried piping	**3.7.3.2, 3.7.3, 3.7.3.12, 3.7.3.13, 3.9.1.3, 3.9.3.1.5, Table 3.9-10, 5.2.1.1**
Piping Modeling; piping benchmark program, decoupling criteria	**3.6.2.1, 3.7.3.8.2.1, 3.9.1.2**
Pipe stress analysis criteria; loading and load combinations, damping values, combination of modal responses, high frequency modes, thermal oscillations in piping connected to the reactor coolant system, thermal stratification, safety-related valve design, installation and testing, functional capability, combination of inertial and seismic motion effects, welded attachments, modal damping for composite structures, minimum temperature for thermal analysis	**3.6.2.2, 3.6.3, 3.7.2.15, 3.7.3.7, 3.7.3.8.2.1, Table 3.7.1-1, 3.9.3.1, 3.9.3.1.2, 3.9.3.1.5, 3.9.3.3, Table 3.9-5, Table 3.9-6, Table 3.9-7, Table 3.9-11, Table 5.2-3**
Pipe support criteria; applicable codes, jurisdictional boundaries, pipe support baseplate and anchor bolt design, use of energy absorbers and limit stops, pipe support stiffnesses, seismic self-weight excitation, design of supplementary steel, considerations of friction forces, pipe support gaps and clearances, instrument line support criteria	**3.9.3.4, 3.9.1.2, 3.9.3.5, 3.9.3.4**

PRA Revision:

None

AP1000 DESIGN CERTIFICATION REVIEW

Response to Request For Additional Information

RAI Number: 210.033

Question:

Actual piping and pipe support design/analysis have not yet been performed and may not be completed as part of the design certification. However, the staff learned in a public meeting with Westinghouse on July 17, 2002, that preliminary piping layouts were completed and drawings were available. Please provide layout drawings and address the feasibility of including these piping layouts in the DCD.

Westinghouse Response:

This level of detail was not included in the AP600, ABWR or System 80+ Design Control Documents and should not be included in the AP1000 Design Control Document.

Piping layout drawings and isometrics for both AP600 and the corresponding AP1000 piping systems, which are designated as Leak-Before-Break (LBB) piping systems, were made available to the NRC staff for review at the meetings held on September 9th through the 11th at the Westinghouse office. The review confirmed the similarities between the Ap600 and Ap1000 piping system designs.

AP1000 piping design criteria documents, including LBB and High Energy Line Break (HELB) criteria were also reviewed by the NRC staff in the same meeting.

Design Control Document (DCD) Revision:

None

PRA Revision:

None

AP1000 DESIGN CERTIFICATION REVIEW

Response to Request For Additional Information

RAI Number: 210.034

Question:

The third paragraph of Section 3.6.2.3.3 referenced an Electric Power Research Institute (EPRI) report (Reference 8) to confirm that for piping systems without closing check valves, there is insufficient energy in the high-frequency depressurization loadings to cause a collapse of the piping system. The tests were performed to simulate seismic and system loading until piping failure occurs. It is not clear how Westinghouse could use the results of the test report to justify not considering loadings generated from the internal system depressurization in verifying piping system integrity and operability. Furthermore, Reference 8 is Volume I, "Project Summary," of a November 1989 draft of an EPRI report. The final report was published in October 1994. The final report should be referenced. In addition, Volume 3, "System Tests," may be more applicable than Volume I for referencing. Please modify the text and the reference accordingly. The modified version should quote specific portion(s) of the report for the purpose of the AP1000 DCD since the reference contains a number of tests and evaluations that are not applicable to the case being discussed in this section.

Westinghouse Response:

Based on discussions held with the NRC staff at the meetings held on September 9th through the 11th at the Westinghouse office, it was agreed that the reference to the EPRI report identified above shall be removed from section 3.6.2.3.3 of the DCD.

Design Control Document (DCD) Revision:

The third paragraph of DCD section 3.6.2.3.3 will be revised as follows:

For piping systems without closing check valves, there is little energy in the high-frequency depressurization loadings. ~~Test results reported in an EPRI report (Reference 8) confirm that this type of loading does not cause collapse of the piping system.~~ These loadings are therefore not considered in the piping and support analysis.

Reference 8 of section 3.6.5 will be deleted as follows:

8. **Deleted** ~~EPRI Report, "Piping and Fitting Dynamic Reliability Program, Volume I," (Draft), November 1989~~

PRA Revision:

None

AP1000 DESIGN CERTIFICATION REVIEW

Response to Request For Additional Information

RAI Number: 210.035

Question:

The completion status of the pipe rupture analysis for the AP1000 needs to be clarified. Subsection 3.6.2.5, under "Verification of the Pipe Break Hazard Analysis," states that to support design certification, the pipe rupture hazard analysis is complete except for the final piping stress analysis, pipe whip restraint design, and the as-built reconciliation. However, the staff notes that: (1) pipe stress analysis is needed to identify intermediate break locations, and (2) pipe whip restraints protect essential components from unacceptable potential consequences resulting from pipe breaks.

As described in Subsection 3.6.2.5, the as-built reconciliation includes a number of activities normally associated with design including ASME Code fatigue analysis, evaluation of pipe break dynamic loads, reconciliation to the design floor response spectra, and confirmation of the reactor coolant loop (RCL) time history seismic analysis.

Table 3.6-2, "Subcompartments and Postulated Pipe Ruptures," and Table 3.6-3, "NI Rooms with Postulated High Energy Line Breaks/Essential Targets/Pipe Whip Restraints and Related Hazard Source," are essentially identical to the corresponding tables in the AP600 DCD with the exception that larger pipe sizes are listed for certain systems.

Based on the above comments: (1) the pipe rupture hazard analysis does not appear to be complete, and (2) if pipe rupture protection is based on the AP600 design, the differences between the AP1000 and the AP600 designs may not have been adequately considered. It appears that the bulk of the pipe rupture hazard analysis design effort will be the responsibility of the COL applicant. Furthermore, considering the higher power rating and the larger pipe sizes of the AP1000 as compared to the AP600, it is reasonable to expect that the higher energy pipe rupture interactions will be potentially more damaging. A design based on pipe rupture protection for the AP600 may not be adequate. Additional information describing the Westinghouse design effort in this area and addressing these concerns should be provided.

Westinghouse Response:

The AP1000 pipe rupture hazard evaluation makes extensive use of the work performed for the AP600 evaluation. Two assumptions are made in the AP1000 pipe rupture hazard evaluation, and these same two assumptions were part of the AP600 evaluation. The first is that the final stress analysis must be shown to satisfy the leak-before-break (LBB) criteria for those lines identified for that evaluation. The second is that the final fatigue analysis needs to confirm that the cumulative usage factor does or does not generate intermediate breaks in the class 1 lines that are part of this pipe break hazard evaluation. Because the non-class 1 lines are designed

to a low stress value, there will be no intermediate stress breaks for these lines. Since the majority of the breaks postulated in this evaluation are at terminal ends, pipe stress and usage factors are less relevant. Based upon the verification of the LBB and fatigue usage assumptions and the similarity in the designs between AP600 and AP1000, the break locations turn out to be the same for the two designs. Although the break locations (like the steam generator main feedwater nozzle terminal end break) were the same for the two designs, the physical coordinates of several breaks shifted due mostly to relocated equipment nozzles. The safety related components for AP1000 are in the same relative positions and in the same rooms as those for AP600. Based upon the applicable piping isometrics for the AP600 and AP1000 designs, break coordinate locations were compared as well as the need for a pipe whip restraint to protect any nearby safety-related equipment. Some of the whip restraints identified for AP1000 need to be repositioned from the location defined for the AP600 design. The whip restraints have not been designed.

The AP1000 piping design uses some larger pipe sizes at a higher power rating compared to the AP600 design. The higher power rating has no direct impact on the pipe rupture hazard evaluation unless it translates into a higher system normal operating temperature and/or pressure. The pressure and temperature change by insignificant percentages and therefore do not impact the evaluation. There are several piping systems in the AP1000 design where the pipe diameter has increased over that used for AP600. All of these systems, except for the main feedwater system, are part of the leak-before-break evaluation and are assumed to meet the LBB criteria for their modified size. The breaks associated with the main feedwater system are mitigated by pipe whip restraints for both the AP600 and AP1000 designs. The whip restraints associated with the larger AP1000 feedwater pipe (20" vs. 16") will be designed for the AP1000 loading.

The COL applicant is ultimately responsible, as for the AP600 design, to verify several assumptions associated with LBB loadings, the final fatigue analysis, and other analysis and layout (separation/shielding/protection) requirements defined in the pipe break hazard evaluation and the ITAAC.

Design Control Document (DCD) Revision:

The first paragraph of section 3.6.2.5 of the DCD will be revised as follows.

3.6.2.5 Evaluation of Dynamic Effects of Pipe Ruptures

The preceding information provides the criteria and methods for the evaluation of the dynamic effects of pipe ruptures. The pipe rupture hazard analysis report **(also referred to as the pipe break evaluation report)** includes the following:

- Prepare a stress summary

- Identify pipe break locations in high energy piping
- Identify through-wall crack locations in high and moderate energy piping
- Identify and locate essential structures, systems, and components
- Evaluate consequences of pipe whip and jet impingement

  For rooms with both high energy breaks and essential items, confirm that there is no adverse interaction between the essential items and the whipping pipe or jet.

  The plant layout is modified as required to provide separation to protect essential systems.

- Evaluate consequences of flooding, environment, and compartment pressurization
- Design and locate protective hardware

  Prepare isometric piping sketches that identify the break locations, the basis for these locations and the protective hardware which mitigates the consequences of these breaks.

- Reconciliation of as-built condition

The line size for the Main Feedwater piping is also corrected from 18 inch to 20 inch as shown below.

Line	Diameter (inches)
Main Feedwater	20 ~~18~~
Startup Feedwater	6
Steam Generator Blowdown	4

PRA Revision:

None

AP1000 DESIGN CERTIFICATION REVIEW

Response to Request For Additional Information

RAI Number: 210.036

Question:

The Combined License applicant needs to confirm that the results of the as-designed piping stress analysis fall under the bounding analysis curve for leak-before-break (LBB) as documented in Appendix 3B. The AP1000 DCD quoted "LBB criteria" and "LBB evaluation report" in Table 2.2.3-4 under Design Commitment and Acceptance Criteria. Please define clearly the term "LBB criteria" and "LBB evaluation report " and discuss how bounding curves, as described in Appendix 3B, will be considered by piping analysts in the design stage without completing the piping analyses and the LBB demonstration evaluation to assure the compliance to LBB criteria during the final as-built reconciliation phase.

Westinghouse Response:

"LBB criteria" refers to the identification of the highest stressed point (critical location) and corresponding normal stress determined from the piping stress analysis, as defined in Appendix 3B of the AP1000 DCD; and comparison of these stresses to the appropriate bounding analysis curve for the specified system. The point defined by the normal stress versus the maximum stress is compared to the bounding analysis curve. If the point is on or below the bounding analysis curve, the leak-before-break analysis and margins are satisfied. The title to Section 3B.3.3.4 of the DCD will be revised as shown on the following page to include "LBB Criteria".

"LBB evaluation report" refers to the documentation of the LBB criteria evaluation for the applicable piping system, as identified above and as defined in the appropriate AP1000 piping design criteria documents. Section 3.6.3.4 of the DCD will be revised as shown on the following page to include "LBB evaluation report".

The piping DAC approach requires the applicant to specify the piping design methods, and the analysis and acceptance criteria that will be used for the design of the piping systems. The piping systems designed for Leak-Before-Break for the AP1000 are similar to the AP600 piping systems that were qualified for Leak-Before-Break, using the same methodologies as proposed for AP600. In Westinghouse letter DCP/NRC1516 dated August 5, 2002, a comparison table identifying the similarities and differences between the LBB-qualified piping systems for AP600 and AP1000 is provided. Piping layout drawings and isometrics for both AP600 and the corresponding AP1000 piping systems, which are designated as Leak-Before-Break (LBB) piping systems, were made available to the NRC staff for review at the meetings held on September 9th through the 11th at the Westinghouse office. The review confirmed the similarities between the AP600 and AP1000 piping system designs. Criteria documents, including LBB bounding analysis curve calculation and High Energy Line Break (HELB) criteria, were also reviewed by the NRC staff at this meeting. In addition, several AP600 piping analysis calculations for LBB piping systems were reviewed by the NRC staff to confirm that the LBB

criteria had been applied and documented as defined by the applicable criteria documents.

Design Control Document (DCD) Revision:

Table 1.1-1 will be revised to include the following:

LBB - Leak Before-Break

Section 3B.3.3.4 formerly titled "Bounding Analysis Curve Comparison" will be re-titled as follows:

3B.3.3.4 Bounding Analysis Curve Comparison – LBB Criteria

To compare the stress results with the bounding analysis curve the following process is followed. The normal and maximum stress at the critical location are calculated by using the loads defined in subsection 3B.3.3. Plot the normal stress versus maximum stress on the bounding analysis curve for the specified system. If the point is on or below the bounding analysis curve, the leak-before-break analysis and margins are satisfied. If the point falls above the bounding analysis curve, the leak-before-break analysis criteria are not satisfied and the pipe layout or support configuration needs to be revised to meet the leak-before-break bounding analysis. Figure 3B-1 shows a typical bounding analysis curve.

3.6.3.4 Documentation of Leak-before-Break Evaluations

The leak-before-break evaluation is used to support the elimination of dynamic effects of pipe breaks from the loading conditions for the piping analysis. An evaluation of leak-before-break using the as-built configuration of the piping system and supports is required as part of the Design Report **(also referred to as LBB evaluation report where applicable)** of the as-built configuration required to meet ASME Code requirements **and LBB criteria.** Appendix 3B contains a discussion of the bounding analysis methods for the leak-before-break evaluation.

The analysis methods, criteria, and loads used for evaluation of stress in piping systems are outlined in subsections 3.7.3 and 3.9.3.

PRA Revision:

None.

AP1000 DESIGN CERTIFICATION REVIEW

Response to Request For Additional Information

RAI Number: 210.037

Question:

Section 3.7.2.5: Is there any enveloping involved in generating the floor response spectra as stated? It appears that there is only one analysis performed for a hard rock site. This should be clarified or corrected, if necessary.

Westinghouse Response:

No enveloping is required since there is only one analysis on hard rock. The third and fourth paragraphs of DCD section 3.7.2.5 will be revised as shown below.

Design Control Document (DCD) Revision:

The floor response spectra for the design of subsystems and components are generated by broadening ~~enveloping~~ the nodal response spectra determined for the hard rock site.

The ~~enveloped floor response spectra are smoothed, and the~~ spectral peaks associated with the structural frequencies are broadened by ±15 percent to account for the variation in the structural frequencies, due to the uncertainties in parameters such as material and mass properties of the structure and soil, damping values, seismic analysis technique, and the seismic modeling technique. Figure 3.7.2-14 shows the ~~smoothing and~~ broadening procedure used to generate the design floor response spectra.

PRA Revision:

None

AP1000 DESIGN CERTIFICATION REVIEW

Response to Request For Additional Information

RAI Number: 210.038

Question:

Section 3.7.3.6 states that for time history analysis, "When the responses from the three components of earthquake motion are calculated simultaneously, each component is statistically independent of the other two. For this case, the components are combined by algebraic sum." This is incorrect. The staff position in SRP 3.7.2 II.6 states that the responses from each of the three components of earthquake motion may be combined algebraically at each time step. When this method is used, the components of earthquake motions specified in the three different directions should be statistically independent (i.e., the input motions not response motions, must be statistically independent). This should be clarified.

Westinghouse Response:

Westinghouse agrees with the above position. The fourth paragraph of DCD section 3.7.3.6 will be revised as shown below.

Design Control Document (DCD) Revision:

One set of three mutually orthogonal artificial time histories is used when time-history analyses are performed. **The components of earthquake motion specified in the three directions are statistically independent and applied simultaneously.** When **this method is used,** the responses from **each of** the three components of motion are ~~calculated simultaneously, each component is statistically independent of the other two. For this case, the components are~~ combined ~~by algebraic sum~~ **algebraically at each time step.**

PRA Revision:

None.

AP1000 DESIGN CERTIFICATION REVIEW

Response to Request For Additional Information

RAI Number: 210.039

Question:

Sections 3.7.3.8.2.2 and 3.9.3 indicate that the small bore piping design and analysis will be completed by the Combined License applicant as part of the as-built reconciliation. Please provide the small bore piping design and analysis procedures and criteria for staff review.

Westinghouse Response:

The AP1000 piping analysis design criteria document is applicable for both large and small bore piping. This procedure was made available to the NRC staff for review at the meetings held on September 9th through the 11th at the Westinghouse office. Review of this criteria indicated that for small bore piping that requires seismic qualification, a seismic analysis consistent with the criteria defined for large bore piping can be used. Alternatively, equivalent static load methods of analysis may be used as defined in DCD subsection 3.7.3.5.

Design Control Document (DCD) Revision:

None.

PRA Revision:

None.

AP1000 DESIGN CERTIFICATION REVIEW

Response to Request For Additional Information

RAI Number: 210.040

Question:

Section 3.7.3.15: Westinghouse should verify that all limitations specified in RG 1.84 for Code Case N-411 apply to the use of 5 percent damping.

Westinghouse Response:

The applicable SSE damping values for AP1000 are defined in Table 3.7.1-1 of the DCD. For piping systems that are evaluated using enveloped response spectra analysis, 5% damping is utilized unless the system is coupled to the Reactor Coolant Loop (RCL). For systems coupled to the RCL, 4% damping is utilized.

Per RG 1.84, the following limitations for the use of Code Case N-411 are defined.

> N-411-1 02-20-86 Alternate Damping Values for Response Spectra
> 02-20-89 Analysis of Classes 1, 2, and 3 Piping,
> 04-30-92 Section III, Division 1
>
> Code Case N-411-1 is acceptable subject to the following conditions in addition to those conditions specified in the Code Case: (1) The Code Case damping should be used completely and consistently, if used at all. (For equipment other than piping, the damping values specified in Regulatory Guide 1.61, "Damping Values for Seismic Design of Nuclear Power Plants," should be used.) (2) The damping values specified may be used only in those analyses in which current seismic spectra and procedures have been employed. Such use should be limited only to response spectral analyses (similar to that used in the study supporting its acceptance--Reference NUREG/CR-3526). (3) When used for reconciliation work or for support optimization of existing designs, the effects of increased motion on existing clearances and on line mounted equipment should be checked. (4) This Code Case is not appropriate for analyzing the dynamic response of piping systems using supports designed to dissipate energy by yielding (i.e., the design of which is covered by Code Case N-420). (5) This Code Case is not applicable to piping in which stress corrosion cracking has occurred unless a case-specific evaluation is made and is reviewed by the NRC staff.

The damping values identified above (i.e. 5% or 4%) are used consistently for all piping system seismic analyses utilizing enveloped response spectra methods. The enveloped response spectra is developed as outlined in DCD section 3.7.1.1, and in accordance with Regulatory Guide 1.122 as detailed in DCD section 3.7.2.5. The design of the AP1000 piping systems does not include supports designed to dissipate energy by yielding, and the piping systems analyzed are not susceptible to stress-corrosion cracking.

AP1000 DESIGN CERTIFICATION REVIEW

Response to Request For Additional Information

Design Control Document (DCD) Revision:

None.

PRA Revision:

None.

AP1000 DESIGN CERTIFICATION REVIEW

Response to Request For Additional Information

RAI Number: 210.041

Question:

Section 3.7.3.15 of the DCD provides information on damping and references Section 3.7.1.3 for additional information. The staff found the information in Section 3.7.3.15 acceptable for piping systems. However, the following two inconsistencies were noted in Section 3.7.1.3 and need to be corrected:

Section 3.7.3.15 states that for time history analysis and independent support motion analysis of piping systems, damping values of 4 percent, 3 percent, and 2 percent are used as described in Table 3.7.1-1. Section 3.7.1 3 only specifies 5 percent damping for piping and 4 percent for the primary coolant loop.

Section 3.7.3.15 states that for subsystems composed of different material types, the composite modal damping approach with the weighted stiffness method is used to determine the composite modal damping value. Section 3.7.1.3 indicates that the composite modal damping is calculated using the strain energy method.

Westinghouse Response:

Subsection 3.7.1.3 will be revised to refer to the damping values provided in Table 3.7.1-1. As stated in the RAI, this table already shows the correct values for damping for time history analysis and independent support motion.

Section 3.7.1.3 will be also revised as shown below to indicate that the composite modal damping is calculated using the stiffness-weighted method.

Design Control Document (DCD) Revision:

DCD Subsection 3.7.1.3 will be revised as follows:

1st paragraph:

Energy dissipation within a structural system is represented by equivalent viscous dampers in the mathematical model. The damping coefficients used are based on the material, load conditions, and type of construction used in the structural system. The safe shutdown earthquake damping values used in the dynamic analysis are presented in Table 3.7.1-1. The damping values are based on Regulatory Guide 1.61, ASCE Standard 4-98 (Reference 3), ~~and 5 percent damping for piping,~~ except for the damping value of the primary coolant loop piping, which is based on Reference 22, and conduits, cable trays and their related supports.

3rd Paragraph:

For structures or components composed of different material types, the composite modal damping is calculated using the **stiffness-weighted method based on Reference 3.**~~strain energy method. The strain energy dependent modal damping values are computed based on Reference 20.~~

3.7.6 References

3. ASCE Standard 4-98, "Seismic Analysis of Safety-Related Nuclear Structures and Commentary," American Society of Civil Engineers, September 1986.

20. **Deleted** ~~Kross, P. W., "Element Associated Damping by Modal Synthesis," Proceedings of the Water Reactor Safety Conference, Salt Lake City, March 1973, National Technical Information Service, U.S. Department of Commerce.~~

PRA Revision:

None

AP1000 DESIGN CERTIFICATION REVIEW

Response to Request For Additional Information

RAI Number: 210.043

Question:

Section 3.7.3.17 states that either direct integration or modal superposition methods may be used in performing time history analysis. However, there is no description of the direct integration analysis methodology. Please provide additional information to describe the significant aspects of this analysis methodology including computer programs, criteria for selection of time steps, specification of damping parameters, treatment of high frequency modes, and consideration of uncertainties.

Westinghouse Response:

All time-history analyses performed for AP600 piping systems utilized modal superposition methods. The same approach will be used for the used in the analysis of AP1000 piping systems. Detailed descriptions of modal superposition are provided in section 3.7 of the AP1000 DCD.

Section 3.7.3.17 of the DCD will be revised to remove direct integration.

Additionally, the last sentence in the first paragraph of section 3.7.3.17 is removed. (Refer to RAI 210.44)

Design Control Document (DCD) Revision:

The first paragraph of section 3.7.3.17 will be revised as follows:

The time history dynamic analysis is an alternate seismic analysis method for response spectrum analysis when time history seismic input is used. This method is also used for dynamic analyses of piping systems subjected to time history hydraulic transient loadings or forcing functions induced by postulated pipe breaks. ~~Direct integration or~~ tThe modal superposition method is used to solve the equations of motion. The computer programs used are GAPPIPE, PIPESTRESS, ANSYS, and WECAN. ~~WECAN is not used for linear time history analyses or response spectra analyses of piping systems.~~

PRA Revision:

None.

AP1000 DESIGN CERTIFICATION REVIEW

Response to Request For Additional Information

RAI Number: 210.044

Question:

The first paragraph in Section 3.7.3.17 indicates that WECAN is not used for linear time history analysis or response spectra analysis of piping systems. The last paragraph in this section discusses the use of WECAN in modal time history analysis (which is generally a linear analysis). Please clarify the application of WECAN in piping analysis and correct the apparent inconsistency in this Section.

Westinghouse Response:

WECAN is used for linear time history analysis. The DCD will be revised as indicated below, which also includes the revision based on RAI 210.043.

Design Control Document (DCD) Revision:

The first paragraph of section 3.7.3.17 of the DCD will be revised as follows:

The time history dynamic analysis is an alternate seismic analysis method for response spectrum analysis when time history seismic input is used. This method is also used for dynamic analyses of piping systems subjected to time history hydraulic transient loadings or forcing functions induced by postulated pipe breaks. ~~Direct integration or~~ tThe modal superposition method is used to solve the equations of motion. The computer programs used are GAPPIPE, PIPESTRESS, ANSYS, and WECAN. ~~WECAN is not used for linear time history analyses or response spectra analyses of piping systems.~~

PRA Revision:

None

AP1000 DESIGN CERTIFICATION REVIEW

Response to Request For Additional Information

RAI Number: 210.045

Question:

Computer programs used in AP1000 analyses are discussed in DCD Section 3.9.1.2 and are listed in Table 3.9-15. For piping design certification, Section 3.9.1.2 indicates that Westinghouse will use PIPESTRESS, GAPPIPE, WECAN, AND ANSYS.

A. Provide a summary listing to identify the program or programs that will be used to analyze each specific piping system as well as the type of analysis that will be performed for each system.

B. WECAN and ANSYS are general purpose finite element analysis programs that are not normally used for piping analysis and do not have the built-in capability for performing ASME Code evaluations. Provide detailed information on their specific application in AP1000 piping analysis and on their verification and validation for this type of application.

C. GAPPIPE is a special purpose computer program for the evaluation of piping systems that use gapped supports in place of snubbers. Identify the specific AP1000 piping systems that utilize these supports. Provide detailed information on the applicability and limitations of the GAPPIPE program and on its verification and validation for use in the AP1000.

D. The PIPESTRESS program is not listed in Table 3.9-15. Instead, the table lists PS+CAEPIPE and CAEPIPE as piping analysis programs. This appears to be an oversight that should be corrected.

E. It appears that PIPESTRESS will be the primary program for piping analysis and design. Provide a summary description of this program including its capabilities, limitations, verification and validation.

F. Westinghouse reported in the July 17, 2002, public meeting that the PIPESTRESS program to be used for the AP1000 piping design and analysis is the same computer program PS+CAEPIPE that is used for the AP600. Please clarify and highlight the control and any changes in the process of converting PS+CAEPIPE to PIPESTRESS.

G. Westinghouse needs to provide three sample piping analysis problems for NRC's consideration of independent benchmarking. Specific piping systems, computer programs, types of analyses, and types of loading will be identified and agreed upon at a later date.

H. The staff learned that the three (3) piping benchmarking problems used in the AP600 were selected as verification problems for the PIPESTRESS computer code. The sample problems were re-analyzed and re-verified for every new revision of the PIPESTRESS code and, therefore, re-run of the sample problems by NRC is not required. While this is an acceptable and more effective alternative to g. above, it needs to be reflected in the AP1000 DCD for formal documentation.

Westinghouse Response:

A. DCD Table 3.9-15 provides a listing of the computer codes to be used in analysis of seismic category 1 components. DCD Section 3.9.1.2 addresses verification and validation of computer programs used in analyses. Specifically, DCD Section 3.9.1.2 states:

A number of computer programs that are used in the dynamic and static analyses of mechanical loads, stresses, and deformations, and in the hydraulic transient load analyses, of seismic Category I components and supports are listed in Table 3.9-15. A complete list of programs will be included in the ASME Code Design Reports. The Combined License applicant will implement the NRC benchmark program using AP1000 specific problems if a piping analysis computer program other than those used for design certification (PIPESTRESS, GAPPIPE, WECAN, and ANSYS) is used.

The development process, verification, validation, configuration control and error reporting and resolution for computer programs used in these analyses for the AP1000 are completed in compliance with an established quality assurance program. The quality assurance program is described in Chapter 17. The verification conforms to at least one of the following methods:

- Hand calculations
- Alternate verified calculational methods
- Results of other verified programs
- Results obtained from experiments and tests
- Known solutions for similar or standard problems
- Measured and documented plant data
- Confirmed published data and correlations
- Results of standard programs and benchmarks
- Parametric sensitivity analysis
- Reference to a verification and validation that has been reviewed and accepted by an independent third party

This approach was also used for AP600 Design Certification. With respect to the use of WECAN and ANSYS codes, these codes are used for analysis of the reactor coolant loop piping.

B. The analysis codes WECAN and ANSYS are used to perform analysis of the reactor coolant loop piping and class 1 components. These the same analysis codes that were used for the design and analysis of the AP600 class 1 components including piping.

C. GAPPIPE is used for applications to replace snubbers with Limit Stops, as needed, if it is determined that snubbers are not desirable for the plant.

D. PIPESTESS will be used for initial qualification of all auxiliary lines. PS+CAEPIPE refers to a family of computer codes that was provided to Westinghouse by SST Systems Inc. The "PS" stands for PIPESTRESS which is the main processor for this family of codes, and performs the applicable piping stress analyses. PIPESTRESS is a nuclear Quality Assured program that was provided by DST Computer Services and distributed by SST Systems. CAEPIPE is a PC based program that was not qualified in accordance with WCAP-8370 and was not used by Westinghouse for any piping analysis work. The current license agreement that Westinghouse has for PIPESTRESS is no longer with SST Systems. Distribution of this program PIPESTRESS is now directly from DST Computer Services. Any reference to program CAEPIPE shall be removed from the AP1000 DCD and any reference to program PS+CAEPIPE shall be modified to PIPESTRESS.

E. See the responses to A and D above.

F. See the response to D above.

G. Three sample confirmatory piping analysis problems were provided by Westinghouse for the AP600 and reviewed by the NRC and Brookhaven National Laboratory (BNL). The three sample problems were:

- Confirmatory Problem 1: Enveloped Response Spectra Analysis
- Confirmatory Problem 2: Multi-Level Response Spectra Analysis
- Confirmatory Problem 3: Time-History Analysis

Comparison of theses results utilizing the PIPESTRESS computer code were reviewed by Westinghouse, BNL, and the NRC and found to be acceptable. Subsequent to the publication of NUREG/CR6414 (BNL-NUREG-52487), the three dynamic benchmark problems were incorporated by DST Computer Services into the formal library of Verification Test Set (VTS) Problems for program PIPESTRESS as documented in the user's manual. These problems are maintained as part of DST's formal Quality Assurance Program.

H. Section 3.9.1.2 of the DCD states "The Combined License applicant will implement the NRC benchmark program using AP1000 specific problems if a piping analysis computer program other than those used for design certification (PIPESTRESS, GAPPIPE, WECAN, and ANSYS) is used". The three benchmark problems identified in item G above for the AP600 are also representative piping analysis problems for the AP1000. If a piping analysis program other than those identified above is used for AP1000 piping stress analysis, the analysis program would need to be benchmarked against the results published in NUREG/CR6414. The AP1000 DCD will be revised as shown on the following page.

Design Control Document (DCD) Revision:

Table 3.9-15 will be revised DCD will be revised as follow:

~~CAEPIPE~~	~~Static analysis of piping analysis~~
~~PS+CAEPIPE~~PIPESTRESS	Static and dynamic analysis of piping systems

The first paragraph of Section 3.9.1.2 will be revised as follows:

A number of computer programs that are used in the dynamic and static analyses of mechanical loads, stresses, and deformations, and in the hydraulic transient load analyses, of seismic Category I components and supports are listed in Table 3.9-15. A complete list of programs will be included in the ASME Code Design Reports. The Combined License applicant will implement the NRC benchmark program using AP1000 specific problems **(Reference 20)** if a piping analysis computer program other than those used for design certification (PIPESTRESS, GAPPIPE, WECAN, and ANSYS) is used.

Section 3.9.8.6 of the DCD will be revised as follows:

3.9.8.6 Piping Benchmark Program

The Combined License applicant will implement a benchmark program as described in subsection 3.9.1.2 if a piping analysis computer program other than one of those used for design certification is used. **The piping benchmark problems identified in Reference 20 for the Westinghouse AP600 are also representative for the AP1000 and can be used for the AP1000 piping benchmark program if required.**

Reference 20 will be added as follows:

"Piping Benchmark Problems for the Westinghouse AP600 Standardized Plant" NUREG/CR-6414 (BNL-NUREG-52487), Brookhaven National Laboratory, January 1997, Prepared for the U.S. Nuclear Regulatory Commission.

PRA Revision:

None.

AP1000 DESIGN CERTIFICATION REVIEW

Response to Request For Additional Information

RAI Number: 210.046

Question:

Thermal hydraulic loads are applicable to several piping systems experiencing valve opening and discharge loads. Please provide the name and the description of the computer programs, along with the verification and validation, to be used for the thermal hydraulic analyses of AP1000 design. The program used to derive the forcing functions shall also be described.

Westinghouse Response:

The codes used to develop thermal-hydraulic loads for piping systems are the same for the AP1000 as those approved for AP600. The listing of codes is provided in DCD Table 3.9-15. The codes used for this purpose include MULTIFLEX, MULTIFLEX-SG and ITCH.

Design Control Document (DCD) Revision:

None.

PRA Revision:

None.

AP1000 DESIGN CERTIFICATION REVIEW

Response to Request For Additional Information

RAI Number: 210.047

Question:

In defining the seismic events, cycles and magnitudes, Section 3.7.3.2 states as follows: ".....two safe shutdown earthquake events with 10 high-stress cycles per event. ..... For ASME Class 1 piping, the **fatigue evaluation is performed based on five seismic events** with an amplitude equal to one-third of the safe shutdown earthquake response. Each event has 63 high-stress cycles."

Section 3.9.3.1.1 states "In addition, systems and components sensitive to fatigue are evaluated.....by including 20 full cycles of the maximum safe shutdown earthquake stress range **or five seismic events** each resulting in 63 full stress cycles with a magnitude equal to one-third of the calculated safe shutdown earthquake response.....".

Please correct the apparent inconsistency between the two sections and if Section 3.9.3.1.1 is correct, Westinghouse needs to say "whichever results in higher (or lower) cumulative usage factor."

Westinghouse Response:

The two sections are attempting to describe the method that is used in considering seismic events in fatigue evaluations of Class 1 piping. AP1000 DCD sections 3.7.3.2 and 3.9.3.1.1 will be revised with consistent terminology.

Additionally, during the meetings held on September 9th through the 11th at the Westinghouse office, discussions with the NRC staff regarding the elimination of OBE from the design basis were conducted. Although OBE is not considered for the ASME Code primary stress evaluations, a reduced range seismic event, as identified in DCD sections 3.7.3.2 and 3.9.3.1.1, is required for the ASME Code secondary stress and fatigue evaluations of Class 1 piping components. Section 3.6.2.1.1.1 of the DCD discusses the criteria for the postulation of intermediate breaks in Class 1 piping. Specifically, intermediate pipe break locations are postulated where the following conditions are identified.

> Intermediate locations where the maximum stress range as calculated by Equation (10) of Paragraph NB-3653 of the ASME Code, Section III exceeds 2.4 Sm (where Sm is the design stress intensity), and either Equation (12) or Equation (13) of Paragraph NB-3653.6, exceed 2.4 Sm.
>
> Intermediate locations where the cumulative usage factor as determined by the ASME Code exceeds 0.1.
>
> Efforts will be made to avoid intermediate break locations through appropriate piping layout and pipe support design.

Although the reduced range seismic event is considered in the Evaluation of ASME Code Equations 10, 11, and 13, it does not need to be included in the identification of intermediate pipe break locations. Section 3.6.2.1.1.1 will be revised to include this clarification.

Design Control Document (DCD) Revision:

DCD Section 3.7.3.2 will be revised as follows:

Seismic Category I structures, systems, and components are evaluated for one occurrence of the safe shutdown earthquake (SSE). In addition, subsystems sensitive to fatigue are evaluated for cyclic motion due to earthquakes smaller than the safe shutdown earthquake. Using analysis methods, these effects are considered by inclusion of seismic events with an amplitude not less than one-third of the safe shutdown earthquake amplitude. The number of cycles is calculated based on IEEE-344-1987 (Reference 21) to provide the equivalent fatigue **damage of two full** safe shutdown earthquake events with 10 high-stress cycles per event. Typically, there are five seismic events with an amplitude equal to one-third of the safe shutdown earthquake response. Each **of the one-third safe shutdown earthquake** events has 63 high-stress cycles. For ASME Class 1 piping, the fatigue evaluation is performed based on five seismic events with an amplitude equal to one-third of the safe shutdown earthquake response. Each event has 63 high-stress cycles.

DCD Section 3.9.3.1.1 will be revised as follows:

Seismic Category I systems and components, including core support structures, are designed for one occurrence of the safe shutdown earthquake which is evaluated as a Service Level D condition for pressure boundary integrity.). **In addition, systems and components sensitive to fatigue are evaluated for cyclic motion due to earthquakes smaller than the safe shutdown earthquake. Using analysis methods, these effects are considered by inclusion of seismic events with an amplitude not less than one-third of the safe shutdown earthquake amplitude. The number of cycles is calculated based on IEEE-344-1987 (Reference 21) to provide the equivalent fatigue damage of two full safe shutdown earthquake events with 10 high-stress cycles per event. There are five seismic events with an amplitude equal to one-third of the safe shutdown earthquake response. Each of the one-third safe shutdown earthquake events has 63 high-stress cycles.**

DCD Section 3.6.2.1.1.1 will be revised as follows:

- At intermediate locations where the following conditions are satisfied:
  - Intermediate locations where the maximum stress range as calculated by Equation (10) of Paragraph NB-3653 of the ASME Code, Section III exceeds 2.4 Sm (where Sm is the design stress intensity), and either Equation (12) or Equation (13) of Paragraph NB-3653.6, exceed 2.4 Sm.
  - Intermediate locations where the cumulative usage factor as determined by the ASME Code exceeds 0.1.
  - Efforts will be made to avoid intermediate break locations through appropriate piping layout and pipe

support design.

The loading conditions considered for the stress range and usage factors calculated to determine break locations are those defined for Level A and B Service conditions for the piping system **with the exception that seismic loads do not need to be considered for the postulation of intermediate break locations.**

PRA Revision:

None

AP1000 DESIGN CERTIFICATION REVIEW

Response to Request For Additional Information

RAI Number: 210.048

Question:

As indicated in Section 3.9.3.1.2 under required actions in response to NRC Bulletin 88-11 request 2(c), Westinghouse states that monitoring of the AP1000 surge line is not required. However, the last paragraph in this section states that a monitoring program will be implemented by the COL holder at the first AP1000. This inconsistency should be clarified.

Westinghouse Response:

Section 3.9.3.1.2 will be clarified to indicate that a monitoring program is not required for plants subsequent to the first AP1000 plant. The surge line monitoring program described in Sections 3.9.3.1.2 and 3.9.8.5 applies only to the first AP1000 plant.

Design Control Document (DCD) Revision:

DCD Section 3.9.3.1.2 will be revised as follows:

Request 2. c)

> Applicants are requested to either monitor the surge line for the effects of thermal stratification, beginning with hot functional testing, or obtain data through collective efforts to assess the extent of thermal stratification, thermal striping and piping displacements.
>
> AP1000 Conformance
>
> As part of the Westinghouse Owners Group program on surge line thermal stratification, Westinghouse collected surge line physical design and plant operational data for all domestic Westinghouse PWRs. In addition, Westinghouse collected surge line monitoring data from approximately 30 plants. This experience was used in the development of the AP1000 thermal stratification loadings. **As described in the AP1000 Conformance to Request 3 of Bulletin 88-11, monitoring will be performed during hot functional testing and during the first cycle of the first AP1000 plant. This Combined License item is identified in DCD subsection 3.9.8.5. Subsequent** ~~M~~monitoring of the AP1000 surge line is ~~therefore~~ not required.

PRA Revision:

None

AP1000 DESIGN CERTIFICATION REVIEW

Response to Request For Additional Information

RAI Number: 210.049

Question:

Section 3.9.3.1.2: The discussion on the identification and evaluation of unisolable lines susceptible to thermal cycling (Bulletin 88-08) is identical to AP600. Did Westinghouse consider the differences between the AP1000 and the AP600 with regard to parameters that may affect the thermal cycling and stratification loadings (fluid temperatures, pressures, flow rates)? Detailed calculations should be provided for staff review.

Westinghouse Response:

Pursuant to NRC Bulletins 79-13, 88-08 and 88-11, the propensity for thermal stratification, cycling and striping (TASCS) in the AP600 piping was evaluated. It was concluded that several piping systems are susceptible to adverse stresses resulting from TASCS loadings. The TASCS loadings are then considered in the detailed piping analysis of the following piping systems:

- Cold leg piping in the loop with passive RHR (during long-term PRHR operation)
- Pressurizer surge line
- Automatic depressurization system stage 4 lines
- Normal residual heat removal suction line
- Passive residual heat removal return line

In Westinghouse letter DCP/NRC1516, "Transmittal of Additional Information on AP1000 Piping Systems Qualified for Leak-Before-Break", August 5, 2002, a comparison of the AP1000 piping systems are made to the AP600 piping systems. The following table is a comparison of the parameters relevant to TASCS, in going from the AP600 design to the AP1000 design. A summary of AP600 analysis results, including detailed computational fluid dynamics (CFD) design analysis results where applied, is also provided.

AP1000 DESIGN CERTIFICATION REVIEW

Response to Request For Additional Information

Comparison of Parameters Relevant to TASCS (AP600 to AP1000 Design)

Relevant Parameter	Cold Leg Piping	Pressurizer Surge Line	ADS Stage 4 Lines	Normal RHR Suction Line	Passive RHR Return Line
Pipe Size	No Change	No Change	Increased from 10" and 12" to 14" and 18"	No Change	Increased from 10" to 14"
Pipe Routing	No Change	No Change	No Change	No Change	No Change
Temperature	AP1000 operating temperature is 535 F, compared to 529 F for AP600.	This line connects the hot leg to the pressurizer lower head. Normal operation stratification ΔT decreased from 53 to 43F. Heatup/cooldown design ΔT remains unchanged at 320F.	This line is connected to the hot leg. Hot leg normal operation temperature increased from 600 to 610F.	This line is connected to the hot leg. Hot leg normal operation temperature increased from 600 to 610F.	This line is connected to the steam generator channel head, near the reactor coolant pump inlet nozzles. Cold leg normal operation temperature increased from 529 to 535F.
Flow Rate	Cold leg flow during normal PRHR operation increases.	Hot leg flow increased.	Hot leg flow increased.	Hot leg flow increased.	PRHR return flow during normal power operation increases.
AP600 Evaluation Results	Design analysis showed a maximum stratification of 256F. AP1000 analysis should demonstrate similar results.	Design analysis of the surge line uses 320F. No change for required for AP1000.	Design analysis show a maximum stratification of 120 F. AP1000 analysis results may be affected by higher hot leg flow rates.	Design analysis predicted negligible stratification. A ΔT of 100F conservatively was used in piping stress analysis. AP1000 results should be similar.	Design analysis predicted a ΔT of 50F. A ΔT of 100F conservatively was used in piping stress analysis. AP1000 results should be similar.

* The evaluation of the AP600 cold leg piping was for passive residual heat removal return flow through the steam generator channel head and into the cold leg, with or without natural circulation in the loops, and without the reactor coolant pumps in operation.

The AP1000 physical design for these piping systems is similar to the AP600 design in most respects, except for some pipe size increases. Temperature changes are minor. Flow rates have increased for the reactor coolant loop for normal power operation.

As part of the detailed piping design for the AP1000, Westinghouse will perform system reviews of the AP1000 piping similar to the calculations performed for AP600, which were reviewed by the NRC staff during their meetings held at the Westinghouse offices on September 9th-11th, 2002. Westinghouse will evaluate the design differences with respect to the effects on TASCS loading, and perform additional calculations (including CFD) if necessary. Resulting thermal loadings will be included in the piping design analyses.

Design Control Document (DCD) Revision:

None

PRA Revision:

None

AP1000 DESIGN CERTIFICATION REVIEW

Response to Request For Additional Information

RAI Number: 210.050

Question:

Section 3.9.3.1.2: The discussion on the identification and evaluation of the pressurizer surge line susceptible to thermal stratification (Bulletin 88-11) is identical to the AP600. Did Westinghouse consider the differences between the AP1000 and the AP600 with regard to the potential for stratification between the pressurizer and the hot leg? Specifically, it is not well known that the pressurizer could be stratified and **the heat-up and cool-down rate** could exceed the defined limit with large surge flow rate. Please describe in the DCD the control of the heat-up and cool-down procedure such that the ΔT between the pressurizer and the reactor coolant system (RCS) hot leg will be less than acceptable value(s) and pressurizer stratification will not be a concern from the stress and fatigue points of view.

Westinghouse Response:

The design of the AP1000 surge line is identical to the AP600 surge line. Therefore, the discussion and evaluation presented in Section 3.9.3.1.2 is the same for the AP600 and AP1000. Section 3.9.3.1.2 provides a detailed conformance assessment of the AP1000 design to NRC Bulletin 88-11.

The AP1000 design will have a slightly lower susceptibility to surge line stratification during normal operation than the AP600 design due to the increased AP1000 operating temperature. Specifically, surge line stratification can develop due to the temperature difference between the pressurizer and the hot leg. In the AP600, the hot leg temperature ranges between 545 and 600 F, while the AP1000 hot leg temperature ranges between 557 and 610 F. The pressurizer operating temperature is 653 F for both plants. Therefore the normal operating ΔT for the AP600 approximately 53 F, while the normal operating ΔT for the AP1000 surge line is 43 F. The surge line is designed to accommodate a temperature difference of 320 F, which can occur during shutdown operations. This limitation is identified in Appendix E of Chapter 19 in the AP1000 DCD (subsection 19E.3.1.3.4.).

Design Control Document (DCD) Revision:

None

PRA Revision:

None

AP1000 DESIGN CERTIFICATION REVIEW

Response to Request For Additional Information

RAI Number: 210.051

Question:

Section 3.9.3.1.5, Section 3.9.3.1.3, Section 3.9.3.1.7: Westinghouse needs to clarify whether Sections 3.9.3.1.3 and 3.9.3.1.7 and the tables that they reference apply to piping or only to other ASME Class 1, 2 and 3 components. They also need to clarify that Tables 3.9-5, 3.9-9, and 3.9-10 apply to piping (these tables are not referenced in Section 3.9.3.1.5 which discusses piping).

Westinghouse Response:

Sections 3.9.3.1.3 and 3.9.3.1.7 and the tables that they reference also apply to piping. Tables 3.9-3, 3.9-5, 3.9-6, 3.9-7, 3.9-9, 3.9-10, and 3.9-11 all apply to the definition of load cases, appropriate load case combinations, and applicable stress criteria and the corresponding stress allowables for ASME Section III Class 1, Class 2, or Class 3 piping. Section 3.9.3.1.5 of the DCD will be revised as shown below to include identification of all applicable tables.

Design Control Document (DCD) Revision:

The first paragraph of DCD section 3.9.3.1.5 will be revised as follows:

The loads for ASME Code Classes 1, 2, and 3 piping are included in the loads listed in Tables 3.9-3. Tables **3.9-5**,-3.9-6, **and 3.9-9** lists ~~**additional**~~ **the** loading combinations and stress limits for Class 1 piping. Tables **3.9-5,** 3.9-**7, and 3.9-10** lists the ~~**additional**~~ loading combinations and stress limits for Class 2 and 3 piping.

PRA Revision:

None.

AP1000 DESIGN CERTIFICATION REVIEW

Response to Request For Additional Information

RAI Number: 210.052

Question:

The last paragraph in Section 3.9.3.1.5 indicates that a monitoring program for the feedwater line at the first AP1000 is identified in Subsection 3.9.3.1.2. The staff did not find any information on a feedwater line monitoring program within this subsection. Please explain and make the necessary correction.

Westinghouse Response:

Feedwater line monitoring was not required for the AP600 and is not implemented in the AP1000. Feedwater line monitoring was part of the AP600 justification for applying Leak-Before-Break methodology to the feedwater piping. These requirements were deleted for AP600 once the NRC did not approve Leak-Before-Break for the feedwater line. However, subsection 3.9.3.1.5 was not appropriately updated. The AP1000 DCD will be updated to delete this reference to feedwater line monitoring.

Design Control Document (DCD) Revision:

DCD Section 3.9.3.1.5 will be revised as follows:

~~A monitoring program for the feedwater line at the first AP1000 is identified in subsection 3.9.3.1.2.~~

PRA Revision:

None.

AP1000 DESIGN CERTIFICATION REVIEW

Response to Request For Additional Information

RAI Number: 210.053

Question:

Section 3.9.3.1.7 indicates that there are no special stress limits required to provide functional capability. This is inconsistent with Section 3.9.3.1.5 and Table 3.9-11 which discuss and provide functional capability requirements. Please clarify and make the necessary correction.

Westinghouse Response:

Section 3.9.3.1.7 will be revised to refer to table 3.9-11 for piping functional capability requirements.

Design Control Document (DCD) Revision:

The first paragraph of section 3.9.3.1.7 will be revised as follows:

Table 3.9-3 lists the loads for ASME Code Class 2 and 3 components. Table 3.9-5 provides the loading combinations. The loading conditions for ASME Class 2 and 3 piping are presented in Table 3.9-3. Table 3.9-10 presents the stress limits for the various service levels. ~~No special stress limits are required to provide~~ **f**Functional capability **requirements are presented in Table 3.9-11.** Subsection 3.7.3 summarizes the seismic analysis methods and criteria for these components. The pipe break analysis methods are summarized in subsection 3.6.2. Analysis methods for Class 2 and 3 piping are summarized in subsection 3.9.3.1.5.

PRA Revision:

None.

AP1000 DESIGN CERTIFICATION REVIEW

Response to Request For Additional Information

RAI Number: 210.054

Question:

It was discussed in the public meeting on July 17, 2002, that the AP1000 is designed for 60-year life. However, when licensed, it will only be for 40-year life. Please clarify in the DCD the fatigue life considered in the design and how the environmental effects on fatigue will be addressed.

Westinghouse Response:

The AP1000 is designed for a 60-year design life. Therefore, the number of normal and upset transients used in fatigue evaluations performed for the design of systems, structures and components are based on a 60-year design life. Due to regulatory requirements, the Combined Operating license granted for a standard plant has a 40-year operating life. An owner that would choose to operate an AP1000 beyond 40 years would be required to apply for a plant life extension with the NRC.

The response to RAI 210.055 provides the clarification on how environmental effects will be addressed in fatigue evaluations for AP1000.

Design Control Document (DCD) Revision:

None

PRA Revision:

None

AP1000 DESIGN CERTIFICATION REVIEW

Response to Request For Additional Information

RAI Number: 210.055

Question:

Current test data indicates that the ASME Code, Section III design fatigue curves may not be conservative for nuclear power plant primary system environments. The Section III Subgroup on Design (SGD) has formed a task group to provide recommendations to the SGD regarding the effect of the environment on Section III design fatigue curves. The NRC staff has been addressing the environmental fatigue issue in its review of license renewal applications. The NRC staff-referenced evaluations of the current test data are provided in NUREG/CR-6583, "Effects of LWR Coolant Environments on Fatigue Design Curves of Carbon and Low-Alloy Steels," and NUREG/CR-5704, "Effects of LWR Coolant Environments on Fatigue Design Curves of Austenitic Stainless Steels," in its license renewal reviews. Describe the method that will be used to account for the effect of the environment on the fatigue design of reactor coolant pressure boundary components in the AP-1000 plant.

Westinghouse Response:

In SECY-95-245, the NRC staff concluded that based on component sample evaluations including fatigue environmental effects, the fatigue limit would not be exceeded for most components, and that a fatigue failure of piping is not a significant contributor to core-melt frequency. Therefore no further evaluation of fatigue environmental effects on operating plants was required. The evaluations were based on typical component designs of plants with a 40 year design life. Current industry efforts to address fatigue environmental effects for license renewal are focused in the EPRI MRP ITG on Fatigue Issues. This group has proposed methods to address environmental effects in fatigue evaluations. Similar methods have been proposed and discussed by the PVRC Steering Committee on Cyclic Life and Environmental Effects, and are contained in the PVRC draft report, "Assessment of Environmental Effects on Fatigue Life in LWR Nuclear Applications", by Van der Sluys and Yakawa. These methods based on industry data will be used to evaluate the effect of environment on the fatigue design of components.

Design Control Document (DCD) Revision:

None

PRA Revision:

None

AP1000 DESIGN CERTIFICATION REVIEW

Response to Request For Additional Information

RAI Number: 210.056

Question:

Section 3.9.3.3.1: The discussion on the design of the pressurizer safety and relief valve (PSARV) module is identical to AP600. The differences, based on the staff's understanding, between the AP600 and the AP1000 design are focused on whether the analysis of the piping system and supports has been completed at the design certification stage. Please justify in the DCD that the AP1000 plant specific PSARV piping configuration can be designed to withstand the combined action of transient thrust forces and the thermal gradients caused by the valve opening without performing the structural dynamic and thermal fatigue analysis.

Westinghouse Response:

The piping systems for the AP1000 Automatic Depressurization System Valves and the Pressurizer Safety Valves are mounted in and supported by a module design termed the PSADS module. The design of this piping module is essentially the same as the similar PSADS module designed for the AP600. The design of this piping system was completed for the AP600 design, and Westinghouse has a high confidence that the piping configuration can be designed to withstand the combined action of transient thrust forces and the thermal gradients caused by the valve opening based on our experience of AP600. It is noted that the effects of the thrust forces on this module have been significantly reduced when compared to Pressurizer and Safety Relief Valve (PSARV) systems used in conventional Westinghouse PWRs due to specific design features incorporated in both the AP600 and AP1000. Specifically, the ADS valves are slow-opening valves when compared to PORVs. This significantly reduces the thrust loads associated with opening of these valves at high pressure. In addition, the pressurizer safety valves are designed without a water loop seal. This also significantly reduces the thrust loads associated with the opening of the pressurizer safety valves. The pressurizer safety valve discharge piping is also significantly reduced in length, and discharges to the containment atmosphere. This eliminates the amount of piping that experience loads due to safety valve discharge.

Piping layout drawings and isometrics for both the AP600 and AP1000 PSADS modules were made available to the NRC staff for review at the meetings held on September 9th through the 11th at the Westinghouse office. The review confirmed a) the similarities between the AP600 and AP1000 designs, b) the safety valves do not contain any water loop seals upstream of the valves, and c) the length of piping downstream of the safety valves is minimized.

Design Control Document (DCD) Revision:

None

PRA Revision:

None

AP1000 DESIGN CERTIFICATION REVIEW

Response to Request For Additional Information

RAI Number: 210.057

Question:

This appendix contains a discussion on the hot water heating system (VYS), which includes a limited amount of high-energy piping in the auxiliary building. No breaks are postulated in these 3-inch lines in the nuclear island because there are no anchors or fittings on these lines in the nuclear island. "No anchor or fittings" is not an adequate basis for not postulating breaks on a high energy line. Please provide more specific justification, following the criteria contained in the SRP, for the conclusion that no breaks need to be postulated.

Westinghouse Response:

The hot water heating system lines in the auxiliary building sub-compartments that include seismic category 1 systems or components are restricted to pipes 1 inch and smaller NPS. Pipe breaks are not postulated in piping runs of a nominal diameter equal to or less than one inch. Appendix 3E will be revised as shown below.

Design Control Document (DCD) Revision:

The second paragraph of Appendix 3E will be revised as follows:

In addition to the high-energy pipe identified in the figures, the hot water heating system (VYS) includes a limited amount of high-energy piping in the auxiliary building. The subject piping is the 3 inch-diameter supply and return header piping for the heating coils in HVAC equipment in the auxiliary building. ~~There are no anchors or fittings on these lines in the nuclear island.~~ **The hot water heating system lines in the auxiliary building sub-compartments that include seismic category 1 systems or components are restricted to pipe sizes less than or equal to 1 inch NPS.** Therefore, there are no postulated pipe breaks in these lines on the nuclear island.

PRA Revision:

None

AP1000 DESIGN CERTIFICATION REVIEW

Response to Request For Additional Information

RAI Number: 210.061

Question:

Reference, Volume 6, Section 3.9.4.2.3, Pg. 3.9-73:

(Editorial): The first sentence in this section appears to be missing some text, or may be incorrectly worded. Please provide clarification.

Westinghouse Response:

The sentence should read: "The internal components of the control rod drive mechanism include the latch assembly, drive rod and the coupling *that* attaches the drive rod to the rod cluster control assemblies and gray rod control assemblies."

Design Control Document (DCD) Revision:

From DCD page 3.9-72

The internal components of the control rod drive mechanism include the latch assembly, drive rod and the coupling **that** attaches the drive rod to the rod cluster control assemblies and gray rod control assemblies.

PRA Revision:

None

AP1000 DESIGN CERTIFICATION REVIEW

Response to Request For Additional Information

RAI Number: 210.066

Question:

AP1000 DCD, Revision 0, Volume 3, "Tier 2 Information" did not address New Generic Issue 89, "Stiff Pipe Clamps." Please provide information on whether the use of stiff clamps are allowed or prohibited on the design of AP1000 piping systems. If the use of stiff pipe clamps are permitted, please define the conditions under which they may be used and describe how their impacts on stiffness and discontinuities are addressed on the design of thick-wall and thin-wall piping systems.

Westinghouse Response:

The support design criteria for both the AP600 and the AP1000 prohibit the use of "stiff" yoke type pipe clamps as they induce large local stresses into the piping system. This criteria document was reviewed by the NRC staff during meetings held at the Westinghouse offices on September 9-11, 2002.

Design Control Document (DCD) Revision:

None

PRA Revision:

None

AP1000 DESIGN CERTIFICATION REVIEW

Response to Request For Additional Information

RAI Number: 252.009

Question:

Section 3.8.2.2 indicates that the containment pressure vessel shell material is SA738, Grade B. This material has been approved by ASME Code Case N-655 which approves SA-738, Grade B, material for the construction of containment vessels. The staff finds this application of SA-738 , Grade B, material acceptable subject to the following two conditions:

a. Westinghouse needs to specify in its purchase specifications that SA-738 Supplementary Requirement S17, Vacuum Carbon-Deoxidized Steel, applies to this material, and

b. SA-738 Supplementary Requirement S20, Maximum Carbon Equivalent for Weldability, also applies to the material.

These two requirements are needed to ensure adequate materials properties and weldability of the containment vessel material. SA-738, Grade B, material is exempt from postweld stress relief heat treatment up to 1.75 inches of thickness. The AP1000 containment vessel is 1.75 inches thick. That means that the welds will not be stress relieved and, therefore, higher residual stresses will be present in the welds. Also, the material will most likely be procured in the quenched and tempered condition. Welding will reduce the impact properties of the material in the heat effected zone. Requiring vacuum-degassed steel will ensure adequate material properties. Requiring a carbon equivalent weldability check will ensure that the steel is readily weldable because the residual elements of the steel will be more tightly controlled. Westinghouse will need to include these two conditions in an updated revision to the DCD. (Section 6.2)

Westinghouse Response:

The DCD will be revised to identify the supplemental requirements noted in the question which are included in the AP1000 design.

Design Control Document (DCD) Revision:

Revise first paragraph of 3.8.2.6 as follows:

Materials for the containment vessel, including the equipment hatches, personnel locks, penetrations, attachments, and appurtenances meet the requirements of NE-2000 of the ASME Code. The basic containment material is SA738, Grade B, plate. **The procurement specification for the SA738, grade B, plate includes supplemental requirements S17, Vacuum Carbon-Deoxidized Steel and S20, Maximum Carbon Equivalent for Weldability.** This material has been selected to satisfy the lowest service metal temperature requirement of -15°F. This temperature is established by analysis for the portion of the vessel exposed to the environment when the minimum ambient air temperature is -40°F. Impact test requirements are as specified in NE-2000.

PRA Revision:

None

AP1000 DESIGN CERTIFICATION REVIEW

Response to Request For Additional Information

RAI Number: 260.001

Question:

In the AP 600 DCD (Tier 2) Section 17.3, "Quality Assurance During Design, Procurement, Fabrication, Inspection and/or Testing of Nuclear Power Plant Items and Services," Westinghouse stated:

> Safety Related systems classified as Equipment Classes A, B, and C, and (sic) will meet the requirements of 10 CFR 50, Appendix B. For systems, structures, and components included in the regulatory treatment of non-safety systems (RTNSS), the quality assurance requirements are identified in Table 17.1. See section 16.3 for systems that should be considered for designation of systems and components included in the regulatory treatment of non-safety systems.

In the AP1000 DCD (Tier 2) Section 17.3, Westinghouse revised the above paragraph to state:

> Safety Related systems classified as Equipment Classes A, B, and C, and (sic) will meet the requirements of 10 CFR 50, Appendix B. For systems, structures, and components ~~included in the regulatory treatment of non-safety systems (RTNSS)~~**that are important in protecting the utilities' investment and for preventing and mitigating severe accidents**, the quality assurance requirements are identified in Table 17.1. See section 16.3 for systems that should be considered for designation of systems and components included in the ~~regulatory treatment of non-safety systems~~**that have investment protection short term availability requirement.**

The regulatory treatment of non-safety-related systems (RTNSS) is defined in SECY 95-132, "Policy and Technical Issues Associated with the Regulatory Treatment of Non-Safety Systems (RTNSS) in Passive Plant Designs," dated May 22, 1995, and the Standard Review Plan (SRP) Section 17.4, "Design Reliability Assurance Program [D-RAP]." Westinghouse should revise DCD (Tier 2) Sections 17.3 and 17.4, to maintain the RTNSS classification. If any RTNSS systems were removed from the D-RAP, Westinghouse should either place these systems back into the D-RAP or provide a technical justification for removing them from the D-RAP.

Westinghouse Response:

The DCD text will be revised to retain the RTNSS terminology. Note that no systems were removed from the D-RAP due to the change in terminology. The revised text is shown below.

Design Control Document (DCD) Revision:

Section 17.3:

Safety-related systems are classified as Equipment Classes A, B and C, and will meet the requirements of 10 CFR 50, Appendix B. For ~~nonsafety-related~~ systems, structures, and components **included in the regulatory treatment of nonsafety systems (RTNSS)** ~~that are important in protecting the utilities' investment and for preventing and mitigating severe accidents~~, the quality requirements are identified in Table 17-1. See Section 16.3 for systems that should be considered for designation of systems and components **included in the regulatory treatment of nonsafety systems** ~~that have investment protection short-term availability controls~~.

Section 17.4.8

D-RAP	Design Reliability Assurance Program – performed as part of the AP1000 design effort to assure that the reliability assumptions of the PRA remain valid throughout the plant operating lifetime.
FVW	Fussel-Vesely Worth
O-RAP	Operational Reliability Assurance Process
PRA	Probabilistic Risk Assessment
RAW	Risk Achievement Worth
Risk-significant	Any SSC determined in the PRA or by risk-significance analysis (e.g., Level 2 PRA and shutdown risk analysis) to be a major contributor to overall plant risk
RRW	Risk Reduction Worth
RTNSS	**Regulatory Treatment of Nonsafety Systems**
SSC	Structures, Systems, and Components

PRA Revision:

None

AP1000 DESIGN CERTIFICATION REVIEW

Response to Request For Additional Information

RAI Number: 260.003

Question:

On May 9, 2002, Westinghouse gave a presentation to the Nuclear Regulatory Commission staff on the AP1000 design. During the presentation, Westinghouse stated that two system functions were added and one function was removed from the D-RAP. Westinghouse used most of the AP600 D-RAP to create the AP1000 D-RAP.

(a) The two functions that were added were: (1) the passive containment cooling system (PCS) diverse motor operated valve (MOV) drain function for evaporative cooling of the containment shell during design basis accidents; and (2) the Normal Residual Heat Removal (RNS) function. Westinghouse should provide risk ranking changes (i.e., risk achievement worth and risk reduction worth), expert panel and engineering judgement information on the PCS and RNS functions that were added.

(b) In the AP600 design, the PMS actuation hardware, the ESF Actuation and Protection Logic Cabinets were in the scope of the D-RAP. For the AP1000 design, the PMS actuation hardware, the ESF Actuation and Protection Logic Cabinets were removed from the scope of the D-RAP. Westinghouse should provide additional information stating why these cabinets were removed from the scope of the D-RAP.

(c) In the AP600 design, two containment recirculation lines provide long term core cooling following a loss-of-coolant accident (LOCA). A motor operated valve (MOV) in each of these recirculation lines is normally closed. These MOVs automatically open to allow containment re-circulation when the In-containment Refueling Water Storage Tank (IRWST) level is reduced to about the same level as the containment. The MOVs also allow long term core cooling to be provided by the RNS pumps. These valves together with the IRWST re-circulation squib valves can provide rapid flooding of the containment to support in vessel retention during severe accidents.

For the AP1000 design, the automatic open function of the passive core cooling system (PXS) containment re-circulation isolation motor operated valves (MOVs) was removed. This function was also removed from the D-RAP. For the AP1000 design, DCD (Tier 2) Table 6.3-3 shows that these valves are normally open. However, DCD (Tier 2) page 6.3-10 states "the containment re-circulation motor operated valve and squib valves automatically open to provide redundant flow paths from the containment to the reactor." The DCD (Tier 2) also states in the next paragraph that "the motor-operated valve path can be manually opened to intentionally drain the IRWST to the reactor cavity during severe accidents." This language in the DCD (Tier 2) assumes that the valves are normally closed. Westinghouse should clarify whether the valves position are normally open or closed in the AP1000 design. If these MOVs are normally closed, then the automatic open function should be within the scope of the D-RAP.

Westinghouse Response:

(a) This question is answered in the response to RAI 260.002.

(b) The changes to Table 17.4-1 on the PMS were made to incorporate changes in I&C system terminology that were made to the AP1000 DCD chapter 7. The scope of the hardware covered by the AP1000 D-RAP is the same as in the AP600. Based on DCD figure 7.1.2, some additional changes should be made to Table 17.4-1, including:

- Plant Protection Subsystem (replaces Reactor Trip and ESF Subsystems)
- ESF Coincidence Logic (replaces ESF Actuation Cabinets)
- ESF Actuation Subsystem (replaces Protection Logic Cabinets)

(c) The MOVs in the PXS containment recirculation lines are normally open in the AP1000. They are normally closed in the AP600. The text in section 6.3 will be revised to make this clear. See DCD revisions below.

Design Control Document (DCD) Revision:

(a) None

(b) Table 17.4-1

Table 17.4-1 (Sheet 5 of 10)

RISK-SIGNIFICANT SSCs WITHIN THE SCOPE OF D-RAP

System, Structure, or Component (SSC)[1]	Rationale[2]	Insights and Assumptions
System: Protection and Safety Monitoring System (PMS)		
CMT Level Sensors	RAW/CCF	These level sensors provide input for automatic actuation of the ADS. They also provide indications to the operator.
PMS Actuation Software	RAW/CCF	The PMS software modules include field input signal processing, control board signal input processing, actuation logic algorithms and output logic functions.
Reactor Trip Switch Gear	RAW/CCF	These breakers open automatically to allow insertion of the control rods.

Table 17.4-1 (Sheet 5 of 10)

RISK-SIGNIFICANT SSCs WITHIN THE SCOPE OF D-RAP

System, Structure, or Component (SSC)[1]	Rationale[2]	Insights and Assumptions
PMS Actuation Hardware	RAW/CCF	The PMS hardware includes the following: **Plant Protection** ~~Reactor Trip~~ Subsystems **ESF Coincidence Logic** **ESF Actuation** Subsystems Manual Input Multiplexers

Section 6.3.2.1.3:

Containment recirculation initiates when the recirculation line valves are open and the containment flood-up level is sufficiently high. When the in-containment refueling water storage tank level decreases to a low level, the containment recirculation ~~motor-operated valve and~~ squib valves automatically open to provide redundant flow paths from the containment to the reactor.

These recirculation flow paths can also provide a suction flow path from the containment to the normal residual heat removal pumps, when they are operating after containment flood up. In addition, the **squib valves in the recirculation paths containing normally open** motor-operated valves ~~path~~ can be manually opened to intentionally drain the in-containment refueling water storage tank to the reactor cavity during severe accidents. This action is modeled in the AP1000 probabilistic risk assessment.

Section 6.3.3.3.2:

Following the initial thermal-hydraulic transient for a loss of coolant accident event, the passive core cooling system continues to supply water to the reactor coolant system for long-term cooling. When the water level in the in-containment refueling water storage tank drops to a low-low level, the water level in the containment has increased to a sufficient level to provide recirculation flow. The in-containment refueling water storage tank low-low level signal opens the squib ~~and motor-operated~~ valves in the lines between the containment and the gravity injection line. Initially, some of the water remaining in the tank drains to the containment until the water levels equalize. During this drain, injection to the core continues. The redundant flow paths provide continued cooling of the core by recirculation of the water in the containment. Figure 6.3-3 and Table 6.3-1 provide process flow information illustrating passive core cooling system performance for the various modes of system operation.

Section 6.3.3.4.3

The in-containment refueling water storage tank injection squib valves automatically open via the same low hot leg level signal that opens the automatic depressurization stage four valves. The operators can also open these injection and depressurization valves via the diverse actuation system. Once these valves open, injection from the in-containment refueling water storage tank provides gravity injection for core cooling. When the in-containment refueling water storage tank level drops to a low level, the squib valves ~~and motor-operated valves~~ in the containment recirculation line automatically open. This action initiates containment recirculation flow, with flow passing through the in-containment refueling water storage tank gravity injection lines, which provides long-term core cooling.

PRA Revision:

None

AP1000 DESIGN CERTIFICATION REVIEW

Response to Request For Additional Information

RAI Number: 261.001

Question:

Regulatory Guide (RG) 1.68, Revision 2, Appendix A, "Initial Test Programs," Section 1, "Pre-operational Testing," Item i, "Primary and Secondary Containment," provides a list of systems, features, and performance demonstrations that should be included in the test program for primary and secondary containment. The NRC staff reviewed these tests and found that the containment isolation valve closure time tests were not included in AP1000 Section 14.2.9.1, "Pre-operational Test Description." Safety-related closure time tests are discussed in the AP1000 Design Control Document (DCD) (Tier 2) Section 5.4.8, "Valves," and should also be included in DCD (Tier 2) Section 14.2.9.1.

Westinghouse Response:

Subsection **14.2.9.1.10 Containment Isolation and Leak Rate Testing** includes an item "a)" under **General Test Acceptance Criteria and Methods** that states, "Proper operation of safety-related containment isolation valves, listed in Table 6.2.3-1, is verified by the performance of baseline in-service tests as specified in subsection 3.9.6."

The containment isolation valves include an exercise inservice test as indentified in **Table 3.9-16 Valve Inservice Test Requirements.** The exercise inservice test includes the testing requirement for measuring stroke time. The wording under the **Manual/Power-Operated Valve Exercise Tests** heading of subsection **3.9.6.2.2 Valve Testing** states, "The inservice testing requirement for measuring stroke time for valves in the AP1000 will be completed in conjunction with a valve exercise inservice test. The stroke time test is not identified as a separate inservice test."

Therefore, the regulatory guidance is addressed in the present revision of the DCD.

Design Control Document (DCD) Revision:

None.

PRA Revision:

None.

AP1000 DESIGN CERTIFICATION REVIEW

Response to Request For Additional Information

RAI Number: 261.002

Question:

RG 1.68, Revision 2, Appendix A, Section 1, Item j, "Instrumentation and Control Systems," provides a list of instrumentation and control (I&C) systems that should be included in the test program. (Some of these tests can be conducted in conjunction with the appropriate system level tests.) Based on a review of DCD (Tier 2) Section 14.2, "Initial Test Program," Item J, instrumentation, controls, automatic actuation signals, and interlocks, the following system tests were not identified: Item j(12), Failed fuel detection system; Item j(16), Hotwell level control system; Item j(20), instruments used to detect external and internal flooding conditions that could result from such sources as fluid system piping failures; and Item j(22), instruments that can be used to track the course of postulated accidents such as the reactor vessel water level monitors.

a) AP1000 DCD (Tier 2) Section 4.2.4.3, "Letdown Radiation Monitoring," states "the chemical and volume control system letdown monitor may also be used to indicate a breach in the fuel rod pressure boundary. A breach in the fuel rod pressure boundary would be a cause for a sudden increase in reactor coolant activity." In addition, DCD (Tier 2) Section 9.3.6.1.2.1, "Purification," states "the chemical and volume control system is designed to maintain the reactor coolant system activity level at less than the technical specification limit for normal operations with design basis fuel defects." Therefore, the Chemical and Volume Control System (CVCS) letdown radiation monitor should be added as a non-safety-related defense-in-depth testing function in DCD (Tier 2) Section 14.2.9.2.3, "Chemical Volume and Control System Testing."

b) AP1000 SSAR Section 14.2.9.4.1, "Condensate System Testing," did not have a test for the hotwell level control system. Westinghouse should add a test in Section 14.2.9.4.1 for the hotwell level control system.

c) A review of AP1000 DCD (Tier 2) Section 14.3, "Certified Design Material," revealed that Table 14.3.5, Flood Protection, pages 14.3-37 and 38, is a design feature for the AP1000. In addition, there is Inspections, Tests, Analyses, and Acceptance Criteria (ITAAC) for flood protection. Therefore, flood protection tests should also be in the Section 14.2, Initial Test Program, for instruments that detect floods.

d) During the AP600 design review, the NRC staff requested additional information on instrumentation that can be used to track the course of postulated accidents such as containment wide-range pressure indicators, reactor vessel water level monitors, containment sump or pressure suppression level monitors, high range radiation detectors, and humidity monitors. Westinghouse responded by stating that "Instrumentation used for tracking the course of postulated accidents is tested per test abstract 14.2.8.1.60, Post Accident and Monitoring Sampling Functions." The Post Accident Monitoring and Sampling Functions follow the guidance in RG 1.97, "Instruments for Light-Water-Cooled Nuclear Power Plant to Assess Plant and Environs Conditions During and Following and Accident."

For the AP1000 design, test abstract 14.2.8.1.60 no longer exists. Many of the post accident and monitoring functions for tracking post accident conditions are now found in several other test abstracts such as 14.2.9.1.1, "Reactor Coolant System Testing," 14.2.9.1.12, "Protection and Safety Monitoring System Testing." and 14.2.9.2.20, "Primary Sampling System Tests," etc. In DCD (Tier 2) Section 7.5, "Safety-Related Display Information," Table 7.5, "Post Accident Monitoring System," lists most of the instruments in RG 1.68, Appendix A, Section 1, Item J, "Instrumentation and Control Systems." However, the NRC staff could not find any post accident test functions for the reactor vessel level indication system (RVLIS) and the humidity monitors. Please explain. (Westinghouse may also want to consider adding a separate pre-operational test abstract in Section 14.2.9 for the Post Accident Monitoring System found in Table 7.5.)

Westinghouse Response:

The item letter below corresponds to the RAI question letter above.

a) Radiation monitors are tested as part of the radiation monitoring system in accordance with DCD subsection 14.2.9.2.18.

b) The condensate hotwell level control system is part of the condensate system controls and is addressed in the present DCD revision by subsection 14.2.9.4.1 General Test Method and Acceptance Criteria item "b)", which states that, "Proper calibration and operation of the system instrumentation, controls, actuation signals, and interlocks are verified."

c) As noted in the RAI, flood protection is a design feature for the AP1000. There are, however, no instruments for detecting floods (other than those for containment flooding, which is covered in other Initial Test Program sections). Instead, meeting certain building design criteria as identified in the ITAAC establishes the acceptability of the design for flood protection.

d) Reactor vessel level indication is provided from a range in the vessel from the bottom of the hot leg to approximately the reactor vessel mating flange via level instrumentation connected to the hot legs. The hot leg instrumentation initial testing is part of subsection 14.2.9.1.1 Reactor Coolant System Testing. Refer to item g) under General Test Acceptance Criteria and Methods.

Per the criteria in DCD section 7.5, "Post Accident Monitoring System" AP1000 does not require the RVLIS nor the humidity monitors for PAMS and they are therefore not included in table 7.5-1. However, the instruments are tested. Please refer to subsection 5.2.5.3.4 Containment Pressure, Temperature and Humidity Monitors, which identifies that the containment humidity monitors are part of the containment leak rate test system. In turn, the containment leak rate test system is described in section 6.2.5. DCD subsection 6.2.5.2.1 General Description identifies that the humidity sensors are installed inside containment for Type A testing. DCD subsection 14.2.9.1.10 Containment Isolation and Leak Rate Testing, General Test Acceptance Criteria and Methods, item f) identifies that a Type A integrated leak rate test is performed.

Westinghouse does not recommend adding a separate pre-operational test abstract in DCD section 14.2.9 for the Post Accident Monitoring System. As noted by the NRC and as supplemented by the Westinghouse response above, all of the post accident and monitoring functions for tracking post accident conditions are presently found in other test abstracts. Adding a separate section will add confusion or at least unnecessary duplication in the DCD.

The responses above verify that regulatory guidance is addressed in the present revision of the DCD.

Design Control Document (DCD) Revision:

None.

PRA Revision:

None.

AP1000 DESIGN CERTIFICATION REVIEW

Response to Request For Additional Information

RAI Number: 261.003

Question:

RG 1.68, Revision 2, Appendix A, Section 1, Item k, "Radiation Protection Systems," states that "appropriate tests should be conducted to demonstrate proper operation of the following types of systems and components used to monitor or measure radiation levels, to provide for personal protection or to control or limit the release of radioactivity: Item k(4), High Efficiency Particulate Air Filters (HEPA) filter and charcoal adsorber efficiency and in-place leak test. Tests should be conducted as appropriate to verify redundancy and electrical independence." A footnote in RG 1.68 in item k states that "these tests should be consistent with the provisions of Regulatory Guide 1.52, Design, Testing, and Maintenance Criteria for Engineered-Safety-Feature Atmospheric Cleanup System Air Filtration and Adsorption Units of Light-Water-Cooled Nuclear Power Plants."

In AP1000 DCD (Tier 2) Section 9.4.1.2.2, "Component Description," Westinghouse states:

> **HEPA Filters**
>
> HEPA filters are constructed, qualified, and tested in accordance with UL-386 (Revision 9) and ASME N509 (Reference 2), Section 5.1. Each HEPA filter cell is individually shop tested to verify efficiency of at least 99.97 percent using a mono-disperse of 0.3 μm aerosol.
>
> **Charcoal Adsorbers**
>
> Each charcoal absorber is designed, constructed, qualified and tested in accordance with ASME N509 Section 5.2, ASME 510, Sections 11, 12, and 16, and Regulatory Guide 1.140. Each charcoal adsorber is a single assembly with welded construction and 4-inch deep Type III rechargeable adsorber cell, conforming to IE Bulletin 80-03. (Reference 29)

In AP1000 DCD (Tier 2) Section 12.3.3,5, "Air Filtration Units," Westinghouse states:

> The guidance and recommendations of Regulatory Guide 1.140 concerning maintenance and in-place testing provisions for atmospheric cleanup systems, air filtration, and absorption units are used as a guide in the design of the various ventilation systems.

AP1000 DESIGN CERTIFICATION REVIEW

Response to Request For Additional Information

Westinghouse should provide additional information on pre-operational absorber efficiency and in-place leak tests in Section 14.2 for all safety-related and non-safety-related defense-in-depth radiation protection and ventilation systems which contain HEPA Filters and Charcoal Adsorbers. These pre-operational tests should be performed in accordance with the guidance in RG 1.68, Revision 2, Item k(4), RG 1.52 and RG 1.140, "Design, Testing and Maintenance Criteria for Normal Ventilation Exhaust System Air Filtration and Adsorption Units of Light-Water-Cooled Nuclear Power Plants."

Westinghouse Response:

There are two AP1000 HVAC systems that utilize HEPA filters and charcoal adsorbers. They are the nuclear island nonradioactive ventilation system (subsection 9.4.1) and the containment air filtration system (subsection 9.4.7). The initial test program associated with these systems is described in section 14.2, subsections 14.2.9.2.10 and 14.2.9.4.12 respectively.

Subsection 14.2.9.2.10 **General Test Acceptance Criteria and Methods, Item a)**, states, "Proper function of the fans, filters, heaters, coolers, and dampers is verified." Thus testing of the HEPA filters and charcoal adsorbers (filters) is performed. Subsection 9.4.1.4 **Testing and Inspection** identifies that the HEPA filters and charcoal adsorbers are tested in place and that the ductwork is leak tested in place in accordance with the appropriate specifications and RG 1.140.

Similarly, subsection 14.2.9.4.12 **General Test Acceptance Criteria and Methods, Item c)**, states, "Proper operation of the containment air filtration filters is verified." Thus testing of the HEPA filters and charcoal adsorbers (filters) is performed for the containment air filtration system filters also. Subsection 9.4.7.4 **Testing and Inspection** identifies that the HEPA filters and charcoal adsorbers are tested in place and that the ductwork is leak tested in place in accordance with the appropriate specifications and RG 1.140.

Design Control Document (DCD) Revision:

None.

PRA Revision:

None.

AP1000 DESIGN CERTIFICATION REVIEW

Response to Request For Additional Information

RAI Number: 261.004

Question:

RG 1.68, Revision 2, Appendix A, Section 1, Item m, "Fuel Storage and Handling Systems," states "the following list is illustrative of the equipment and components tests that should be included in the test program. Item m(3), Operability and leak tests of sectionalizing devices and drains and leak tests of gaskets or bellows in the refueling canal and fuel storage pool." The NRC staff reviewed pre-operational test in DCD (Tier 2) Section 14.2.9.1.15, "Fuel Handling and Reactor Component Servicing Equipment Test," and found that there was no pre-operational leak tests of gaskets or bellows in the refueling canal and fuel storage pool. Westinghouse should add this pre-operational test to Section 14.2.9.1.15.

Westinghouse Response:

The critical gasket in the design is the double-gasketed blind flange at the refueling canal end, which is part of the containment isolation system. It is tested as part of 14.2.9.1.10 Containment Isolation and Leak Rate Testing, General Test Acceptance Criteria and Methods item d). There are other less critical gaskets in the design.

Westinghouse will add the following to 14.2.9.2.7 Spent Fuel Pool Cooling System Testing, General Test Acceptance Criteria and Methods:

"g) The gates, drains, bellows and gaskets in the refueling canal and fuel storage pool are checked for unacceptable leakage."

Design Control Document (DCD) Revision:

14.2.9.2.7 Spent Fuel Pool Cooling System Testing

General Test Acceptance Criteria and Methods

New item g)...

"g) The gates, drains, bellows and gaskets in the refueling canal and fuel storage pool are checked for unacceptable leakage."

PRA Revision:

None.

AP1000 DESIGN CERTIFICATION REVIEW

Response to Request For Additional Information

RAI Number: 261.008

Question:

In addition to the test abstracts in RAI 261.004; RG 1.68, Revision 2, Appendix A, Section 1, Pre-operational Testing, Item m, Fuel Storage and Handling Systems, states "the following list is illustrative of the equipment and components tests that should be included in the test program: Item m(6), Irradiated fuel pool or building ventilation system tests."

The NRC staff reviewed pre-operational tests in DCD, Tier 2, Section 14.2.9.1.15, "Fuel Handling and Reactor Component Servicing Equipment Test," and found that there was no pre-operational test for the irradiated fuel pool or building ventilation system. Westinghouse should add this pre-operational test to Section 14.2.9.1.15 or add the irradiated fuel pool or building ventilation system test to pre-operational tests performed in Section 14.2.9.2.11, "Radiologically Controlled Area Ventilation System."

Westinghouse Response:

Subsection 14.2.9.2.11 **General Test Acceptance Criteria and Methods, Item a)**, states that, "Radiologically controlled area ventilation system performance is observed and recorded during a series of individual component and integrated system testing to verify the system performs its defense-in-depth function as described in subsection 9.4.3 and appropriate design specifications." Subsection 9.4.3.4 **Testing and Inspection** identifies that, "A system air balance test and adjustment to design conditions is conducted in the course of the plant preoperational test program. Airflow rates are measured and balanced in accordance with the guidelines of SMACNA HVAC Systems – Testing, Adjusting and Balancing (Reference 19)".

Therefore, the regulatory guidance is addressed in the present revision of the DCD.

Design Control Document (DCD) Revision:

None.

PRA Revision:

None.

AP1000 DESIGN CERTIFICATION REVIEW

Response to Request For Additional Information

RAI Number: 420.003

Question:

420.3 (DCD 7.1)

Discuss how the AP1000 I&C "Fail-safe" mode requirement complies with general design criterion (GDC) 23, "Protection System Failure Modes"; IEEE279, section 4.5, "Channel Integrity"; IEEE603, section 5.5, "System Integrity" - for reactor protection system (RPS), engineered safety feature actuation system (ESFAS) and supporting data communication systems.

Westinghouse Response:

The protection system meets the requirements of GDC 23, "Protection System Failure Modes as follows:

> The protection system is designed considering the most probable failure modes of the components under various perturbations of the environment and energy sources. Reactor trip channels are designed on the deenergize-to-trip principle so that a single event (that is, loss of power) that could affect many functions at the same time causes the channels to actuate to their tripped conditions.
>
> The PMS is designed to place the safety systems in a safe state, or into a state that has been demonstrated to be acceptable, if the input instrument fails. Each protection channel has different characteristics and therefore different techniques are used to achieve a fail-safe design. Examples of protective features for selected functions include:
>
> - Reactor trip circuits are designed to fail in the tripped state.
> - Engineered safety features actuated components are designed to fail into a state that has been demonstrated to be acceptable if conditions such as disconnection, loss of power source, or postulated adverse environments are experienced.
> - Sensor circuits are designed, where possible, so that a loss of power will produce a 'safe' signal or will produce an off-scale value or a signal that can be identified by the protection system as 'bad.' Digital protective equipment input circuits are designed to recognize off-scale or bad values and take appropriate action (alarm, actuate, or use redundant signal or equipment where available, etc.)

- De-energize-to-actuate circuits are used for engineered safety feature actuation system (ESFAS) functions where spurious actuation is not a concern.

The protection system, including the supporting data communication systems, meets the requirements of IEEE 279, section 4.5 and IEEE 603, section 5.5 as follows:

> The safety system instrumentation is designed to maintain its capability to initiate its protective functions during and following natural phenomena as credible to the plant, such as earthquakes, tornadoes, hurricanes, floods and winds. Functional capability of the system is maintained during events such as fires, flooding, explosions, missiles, electrical faults, and pipe whip. The equipment is environmentally and seismically qualified.
>
> Redundancy of equipment provides protective functions despite loss of one of the redundant divisions.
>
> Potential causes of fire and missiles resulting from postulated faults within the safety system equipment are identified and addressed. Equipment is built to industry codes, standards, and practices aimed at maximizing reliability and safety. For example, wiring used within electrical equipment and devices used to protect wiring from overcurrent (such as circuit breakers, fuses, and current limiters) are sized and coordinated according to National Electric Code. Insulation used is flame retardant and meets National Electric Code, IEEE, and Underwriter's Laboratory guidelines applicable to the environment where the wiring is located. Electronics are housed in cabinets of metal construction. Circuits leaving the protection cabinets to the other redundant protection divisions or nonsafety areas use isolation devices. In addition, the low power level of the digital equipment limits the fire ignition potential.

Design Control Document (DCD) Revision:

None

PRA Revision:

None

AP1000 DESIGN CERTIFICATION REVIEW

Response to Request For Additional Information

RAI Number: 420.004

Question:

420.4 (DCD 7.1)

Discuss the AP1000 I&C system manual control at a system-level provision per requirement of IEEE279 (Section 4.17) for RPS and ESFAS, including associated parameter displays.

Westinghouse Response:

Manual initiation of protective functions at the system-level is available. Fixed-position controls are provided for use as a manual backup to the automatic protection signals provided by the PMS. Manual initiation of a protective function at the system level performs all actions performed by automatic initiation, such as providing the required action sequencing functions and interlocks.

The controls for manual initiation of protective functions at the system level are located in the MCR and are easily accessible to the operator.

Manual initiation depends on the operation of the minimum of equipment and, once initiated, proceeds to completion unless deliberate operator intervention is taken. No single failure in either the automatic portion, manual portion, or shared portion prevents manual or automatic initiation of a protective function at the system level. This capability is achieved through the redundant structure of the PMS.

The AP1000 human system interface design includes a minimum inventory of dedicated or fixed-position displays and controls. The minimum inventory of fixed-position instrumentation includes those displays, controls, and alarms used to monitor the status of critical safety functions and to manually actuate the safety systems that achieve these critical safety functions. DCD Table 2-3 lists the minimum inventory of fixed-position displays, alarms, and controls.

Design Control Document (DCD) Revision:

None

PRA Revision:

None

AP1000 DESIGN CERTIFICATION REVIEW

Response to Request For Additional Information

RAI Number: 420.006

Question:

420.6 (DCD 7.1.2.14.2)

Please provide the Commercial Dedication process ITAAC for staff review.

Westinghouse Response:

The Commercial Dedication ITAAC is located in Table 2.5.2-8, Item #13. A copy is provided below.

Table 2.5.2-8 (cont.)
Inspections, Tests, Analyses, and Acceptance Criteria

Design Commitment	Inspections, Tests, Analyses	Acceptance Criteria
13. The use of commercial grade computer hardware and software items in the PMS is accomplished through a process that specifies requirements for: a) Review of supplier design control, configuration management, problem reporting, and change control. b) Review of product performance. c) Receipt acceptance of the commercial grade item. d) Acceptance based on equipment qualification and software validation in the integrated system.	Inspection will be performed of the process defined to use commercial grade components in the application.	A report exists and concludes that the process has requirements for: a) Review of supplier design control, configuration management, problem reporting, and change control. b) Review of product performance. c) Receipt acceptance of the commercial grade item. d) Acceptance based on equipment qualification and software validation in the integrated system.

AP1000 DESIGN CERTIFICATION REVIEW

Response to Request For Additional Information

Design Control Document (DCD) Revision:

None

PRA Revision:

None

AP1000 DESIGN CERTIFICATION REVIEW

Response to Request For Additional Information

RAI Number: 420.007

Question:

420.7 (DCD 7.1.2.5)

Describe the Qualified Data Processing Subsystems (QDPS) in more detail. DCD takes credit on the QDPS in the Defense-in-Depth and Diversity analysis. Describe the relationship between the QDPS and the RTS/ESFAS. Are the QDPS sharing sensors with the RTS or the ESFAS? (Figure 7.1-1 showing some sensors feed into plant protection subsystem directly while some sensors feed into QDPS subsystem). If the QDPS has separate sensors, do they have same qualification requirement as RTS/ESFAS ?

Westinghouse Response:

The Qualified Data Processing Subsystem (QDPS), a subsystem of the Protection and Safety Monitoring System (PMS), provides safety-related display of selected parameters in the control room. Power is provided to the QDPS from the Class 1E dc and UPS system for 72 hours after a loss of all ac power (station blackout). After 72 hours, the ancillary diesel generators provide power for the QDPS. QDPS is a two-train subsystem (Divisions B and C). The PMS, including the QDPS, is diverse from the Diverse Actuation System (DAS). Sensors are not shared between PMS and DAS.

The RTS/ESFAS signals are processed by the Plant Protection Subsystem of PMS. Within PMS, some sensors are shared between the Plant Protection Subsystem and QDPS. Shared sensors are processed first by the QDPS because the QDPS will need this sensor for more than 24 hours following a station blackout. 24-hour batteries power the Plant Protection Subsystem; therefore, the Plant Protection Subsystem can not be used for QDPS functions.

The typical input parameter for RTS/ESFAS is four-way redundant with one sensor for each of the four divisions. If that parameter is also needed by QDPS, the B and C division sensors are processed first by QDPS then sent to the Plant Protection Subsystem. The A and D division sensors are not shared with QDPS and thus are processed directly by the Plant Protection Subsystem. If an RTS/ESFAS parameter is not needed by QDPS, it is processed directly by the Plant Protection Subsystem in all four divisions.

Design Control Document (DCD) Revision:

DCD Figures 7.1-1 and 7.1-2 will be revised to show two-way communication between the QDPS and the Plant Protection Subsystem. See attached mark-ups.

REVISION to DCD Figure 7.1-1

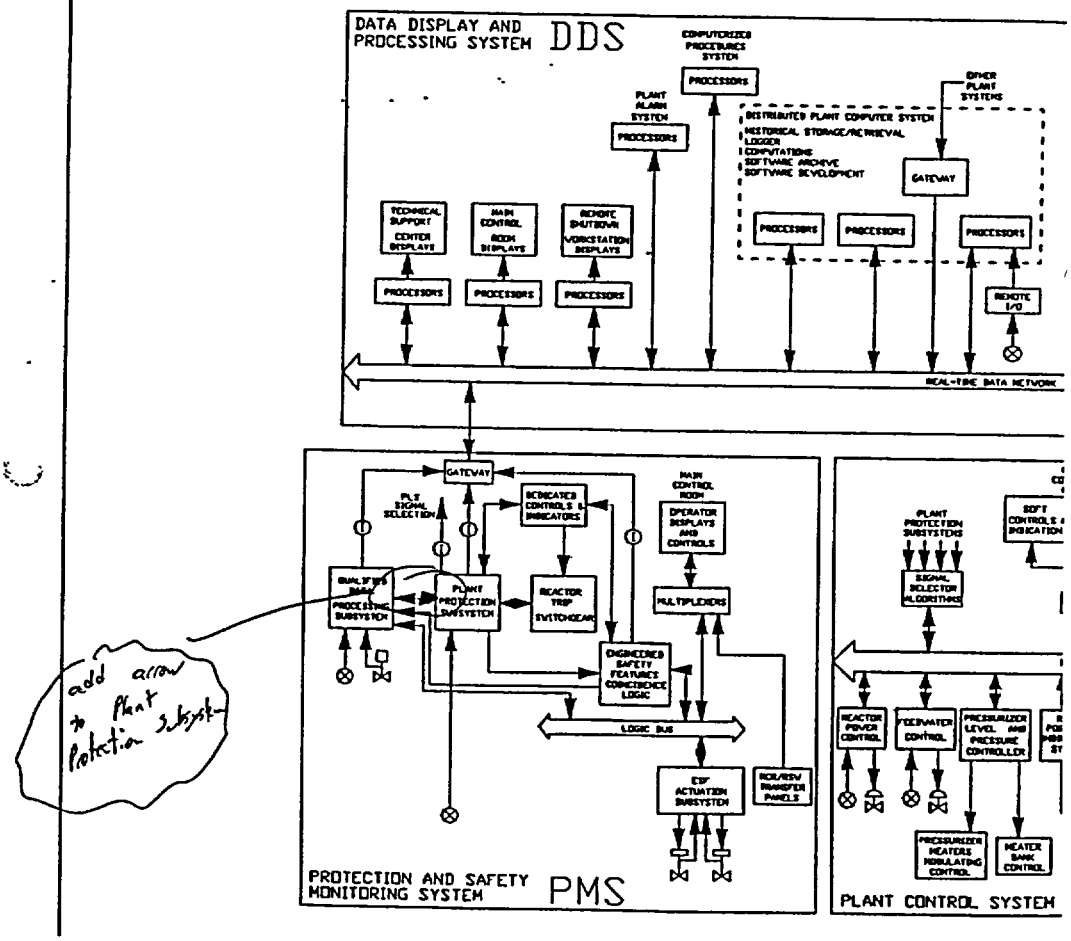

REVISION to DCD Figure 7.1-2

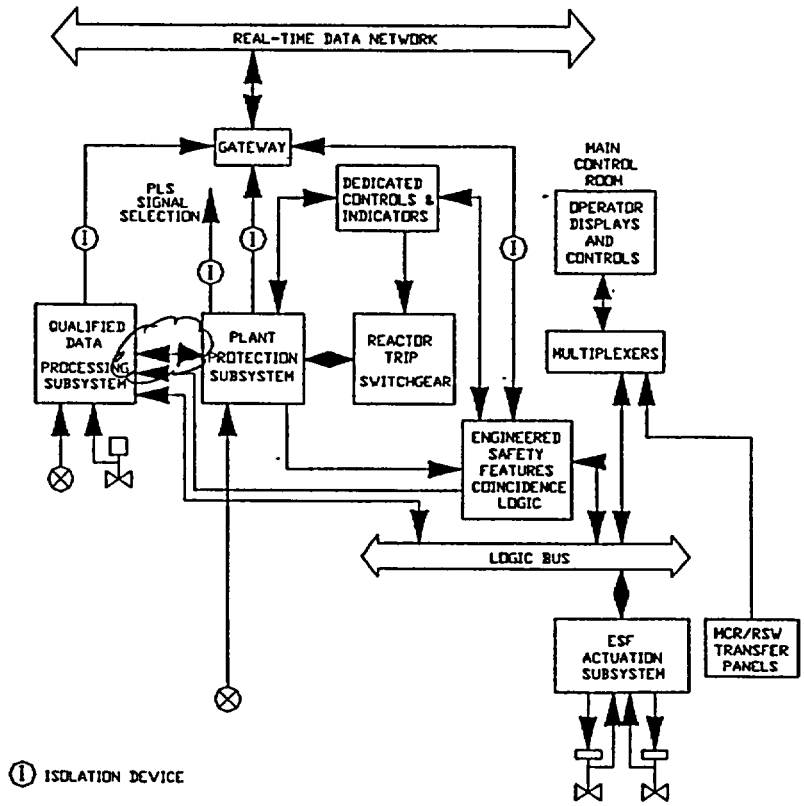

Figure 7.1-2

Protection and Safety Monitoring System

AP1000 DESIGN CERTIFICATION REVIEW

Response to Request For Additional Information

PRA Revision:

None

AP1000 DESIGN CERTIFICATION REVIEW

Response to Request For Additional Information

RAI Number: 420.009

Question:

420.9 (DCD 7.4.3.1.1)

DCD 7.4.3.1.1, "Remote Shutdown Workstation," states that control of nonsafety-related components is available, allowing operation and control when alternating current (ac) power is available. ANSI 58.6 - 1996, "Criteria for Remote Shutdown for Light Water Reactors," Criteria 4.9 states that remote shutdown systems and components, comprising the means to achieve and maintain safe shutdown conditions within 72 hours after a fire-induced evacuation occurrence, shall be capable of being powered by both onsite and offsite electric power systems. Otherwise, an independent onsite power system shall be provided. Discuss the AP1000 design compliance with this criterion.

Westinghouse Response:

The Remote Shutdown Workstation receives power from the Non-Class 1E dc and UPS System (EDS). The EDS system is capable of providing power to the remote shutdown workstation from offsite power systems or from either of the two onsite standby diesel generators. The EDS can also provide uninterruptible battery-backed power for up to two hours following the loss of all ac power sources (offsite and both diesel generators). The EDS system is described in DCD section 8.3.2.1.2. This is the same design as the approved AP600 design.

Design Control Document (DCD) Revision:

None

PRA Revision:

None

AP1000 DESIGN CERTIFICATION REVIEW

Response to Request For Additional Information

RAI Number: 420.010

Question:

420.10 (DCD 7.1.2.8)

Provide the Data Communication System (DCS) ITAAC for staff review. SRP Chapter 7, Section 7.9, "Data Communication System" may be used as guidance.

Westinghouse Response:

The AP1000 has two systems that include data communications systems (DCSs) as defined in SRP Chapter 7, Section 7.9. They are the Class 1E Protection and Safety Monitoring System (PMS) and the Data Display and Processing System (DDS). The real-time data network, which is part of the DDS system, is also used by the plant control system (PLS). The Diverse Actuation System (DAS) does not have a DCS as defined by SRP 7.9.

The ITAAC for PMS is 2.5.2. The ITAAC for PLS is 2.5.3. The ITAAC for DDS is 2.5.4. The ITAACs cover the DCS portions of these systems. The DCSs are integral with the systems of which they are a part. The performance of the DCS can not be separated from the performance of the complete system. A separate DCS ITAAC is not needed.

The design considerations listed in SRP Section 7.9 are addressed as follows:

- Quality of components – The quality of the PMS components and modules is addressed in WCAP-15776, Section 3.4. The ITAAC for the PMS hardware and software design process (ITAAC 2.5.2, item 11) includes the DCS components. The use of commercial grade DCS components in the PMS system is covered by ITAAC 2.5.2, item 13.

  The DDS and PLS equipment, including DCS components, is designed and tested in accordance with industry standards. No ITAAC is required for the quality of the non-safety DDS and PLS components.

- DCS software quality – The PMS software design process, including DCS software, is covered by ITAAC 2.5.2, item 12. The use of commercial grade DCS software in the PMS system is covered by ITAAC 2.5.2, item 13.

  The DDS and PLS software, including DCS software, is developed and tested in accordance with industry standards. No ITAAC is required for the quality of the non-safety DDS and PLS software.

- Performance – Setpoint calculations are a Combined License applicant responsibility. The performance of the PMS is covered by ITAAC 2.5.2, items 6, 7, 8, and 9. The setpoint calculations are covered by ITAAC 2.5.2, item 10.

The performance of the DDS is covered by ITAAC 2.5.4, items 2, 3, and 4. The performance of the PLS is covered by ITAAC 2.5.3, item 2.

- Reliability – The PMS is designed to be reliable. WCAP-13382 provides a description of the hardware elements that comprise the PMS for the AP600. CENPD-396-P provides a description of the hardware elements that comprise the Common Qualified Platform.

  The DDS and PLS are designed and tested in accordance with industry standards for reliable operation.

- Control of access – The DCSs do not present an electronic path by which unauthorized personnel can change plant software or display erroneous plant status to the operators. See response to RAI 420.002 for additional details.

- Single-failure criterion – The single-failure criterion is addressed in WCAP-15776, Section 3.2.

  The non-safety DDS and PLS are not required to meet the single-failure criterion.

- Independence – Independence is addressed in WCAP-15776, Sections 3.7 – 3.12 and 4.3. The ITAAC for PMS separation (ITAAC 2.5.2, item 5) includes the DCS components. Isolation devices are covered by ITAAC 2.5.2, item 7.

- Failure modes – See DCD Section 3.1 and WCAP-15776, Section 2.10, for details concerning AP1000 conformance to GDC 23, "Protection System Failure Modes."

- System testing and inoperable surveillance – System testing and inoperable surveillance are addressed in WCAP-15776, Sections 3.13 and 4.5.

- EMI/RFI susceptibility – The EMI/RFI susceptibility of the PMS is covered by ITAAC 2.5.2, item 3.

  No ITAAC is required for the EMI/RFI susceptibility of the non-safety DDS and PLS.

- Defense in-depth and diversity (D-in-D&D) analysis – AP1000 instrumentation and control D-in-D&D is addressed in WCAP-15775. This analysis includes the DCS portions of PMS and DDS. The Diverse Actuation System (DAS) does not have a DCS as defined by SRP 7.9.

- DCSs exposed to seismic hazard – The seismic qualification of the PMS is covered by ITAAC 2.5.2, item 2.

  No ITAAC is required for the seismic qualification of the non-safety DDS and PLS.

Design Control Document (DCD) Revision:

None

PRA Revision:

None

AP1000 DESIGN CERTIFICATION REVIEW

Response to Request For Additional Information

RAI Number: 420.011

Question:

420.11 (DCD 7.1.7, item 5)

DCD 7.1.7, item 5, listed the AP600 protection system set point study (WCAP-14605) to be applicable for AP1000 design. Explain how the AP600 protection system set point study can be used to address all the set point concerns for the AP1000 design when the Common Q system will be used as AP1000 protection system hardware.

Westinghouse Response:

WCAP-14605, "Westinghouse Setpoint Methodology for Protection Systems – AP600," describes the methodology that will be used by the Combined License applicant to perform the setpoint study, as stated in DCD 7.1.6. The methodology can be used for performing setpoint studies independent of the hardware used for the protection system. For example, the value used for rack calibration accuracy may change as a result of a platform change; however, the methodology used to account for rack calibration accuracy will not change. Thus, the methodology, but not the setpoint study itself, is independent of PMS platform.

Design Control Document (DCD) Revision:

None

PRA Revision:

None

AP1000 DESIGN CERTIFICATION REVIEW

Response to Request For Additional Information

RAI Number: 420.021

Question:

420.21 (DCD Figure 7.1-10)

Describe the signal selector in the AP1000 design. Also, describe the inspection, tests, analyses, and associated acceptance criteria for the signal selector devices to be used in the AP1000 I&C system design.

Westinghouse Response:

The signal selector algorithm is described in DCD section 7.1.3.2. The signal selector function is a non-safety function that is performed by software (signal selector algorithm) running on the distributed controllers of the plant control system. The inspection, tests, analyses, and associated acceptance criteria for the plant control system are found in DCD Volume 1, section 2.5.3.

Item 2 in Table 2.5.3-2 describes the operational test that will be performed for the control interfaces supported by the plant control system, including the signal selector for those interfaces. Basically, signals will be simulated and the plant control system will be tested for correct response. These simulated signal combinations will include simulations of sensor failures (bad signals that should be screened out by the signal selector algorithm).

The inspection, tests, analyses, and associated acceptance criteria for the AP1000 plant control system are not changed from AP600.

Design Control Document (DCD) Revision:

None

PRA Revision:

None

AP1000 DESIGN CERTIFICATION REVIEW

Response to Request For Additional Information

RAI Number: 420.023

Question:

420.23 (DCD 7.1.7, items 8, 9, 10)

During the AP600 review, Westinghouse stated that the process to design, manufacture, install, operate, maintain, and modify the instrumentation and control systems is described in DCD Chapter 7 and WCAP-13383, "AP600 Instrumentation and Control Hardware and Software Design Verification and Validation Process Report." These procedures are available for NRC review. Provide a formal design implementation process with a phased inspection, test, analysis and acceptance criteria (ITAAC) for AP1000 specific Common Q system design development. The description of the development plan should include details of the hardware and software management plan, the configuration plan, and the verification and validation plan. The detailed description should be non-proprietary. The new document should be part of AP1000 Tier 2 Information Requiring NRC Approval for Change (Tier 2*).

Westinghouse Response:

The Common Q design implementation process is described in WCAP-15927, "Design Process for AP1000 Common Q Safety Systems," which replaces NABU-DP-00014-GEN (DCD section 7.1, Reference 10). WCAP-15927 was provided to the staff by DCP/NRC1520 on August 22, 2002. Additional details regarding the Common Q software development plans are available in CE-CES-195 (DCD 7.1, Reference 9). Both documents are non-proprietary. Westinghouse proposes DCD changes shown below, including making these documents Tier 2*.

Design Control Document (DCD) Revision:

Table 1.6-1 (Sheet 12 of 20)

MATERIAL REFERENCED

DCD Section Number	Westinghouse Topical Report Number	Title
7.1	WCAP-13382 (P) WCAP-13391	AP600 Instrumentation and Control Hardware Description, May 1992

[*WCAP-13383*	*AP600 Instrumentation and Control Hardware and Software Design, Verification, and Validation Process Report, Revision 1, June 1996*]*
[*WCAP-14605 (P)* *WCAP-14606*	*Westinghouse Setpoint Methodology for Protection Systems - AP600, April 1996*]*
WCAP-14080 (P) WCAP-14081	AP600 Instrumentation and Control Software Architecture and Operation Description, June 1994
WCAP-15775	AP1000 Instrumentation and Control Defense-in-Depth and Diversity Report, March 2002
[*WCAP-15927*	***Design Process for AP1000 Common Q Safety Systems, August 2002***]*
WCAP-15776	Safety Criteria for the AP1000 Instrumentation and Control Systems, March 2002

7.1.7 References

[*9. CE-CES-195, Rev. 01, "Software Program Manual for Common Q Systems," May 26, 2000.*]*

[*10. ~~NABU-DP-00014-GEN~~WCAP-15927, Rev. 0, "Design Process for AP1000 Common Q Safety Systems," ~~9 March 2001~~August 2002.*]*

PRA Revision:

None

AP1000 DESIGN CERTIFICATION REVIEW

Response to Request For Additional Information

RAI Number: 420.024

Question:

420.24 (DCD Figure 7.1-4)

In the AP600 design, there is an interface between the Remote Shutdown Workstation and the Reactor Trip Switchgear. Explain why the AP1000 design has not shown this interface. Discuss procedure changes from the AP600 design to the AP1000 design with respect to the control transfer from the main control room to the remote shutdown workstation following an evacuation of the control room.

Westinghouse Response:

For both AP600 and AP1000 procedures will instruct the operator to trip the reactor before evacuating the control room and transferring control to the remote shutdown workstation (RSW). Therefore, no hardwired reactor trip interface is needed at the RSW.

The RSW is in a room that is not normally manned. A hardwired reactor trip located at the RSW would be always active. This situation leads to the possibility of an inadvertent reactor trip caused by activity in the area of the RSW.

Because the RSW hardwired reactor trip is not needed and could lead to unnecessary reactor trip, it was removed from the AP1000 design. It remains possible to trip the reactor using soft controls from the RSW after control is transferred to the RSW.

Design Control Document (DCD) Revision:

The following change will be made to the fifth paragraph of 7.4.3.1.1 for clarification.

> Operator control capability at the remote shutdown workstation is normally disabled, and operator control functions are normally performed from workstations located inside the main control room; however, operator control capability can be transferred from the main control room workstations to the remote shutdown workstation if the control room requires evacuation. **Procedures will instruct the operator to trip the reactor prior to evacuating the control room and transferring control to the remote shutdown workstation.** This operator control transfer capability can not be disabled by any single active failure coincident with the loss of offsite power.

PRA Revision:

None

AP1000 DESIGN CERTIFICATION REVIEW

Response to Request For Additional Information

RAI Number: 420.027

Question:

420.27 (DCD 6.3.9)

To support the AP600 review, Westinghouse performed a failure mode and effects analysis (FMEA) on Core Makeup Tank (CMT) level instrumentation as documented in WCAP-13594 (proprietary), "FMEA of Advanced Passive Plant Protection System." This reference is not listed in AP1000 DCD 6.3.9. Provide this reference for AP1000 docket if the analysis is still applicable.

Westinghouse Response:

Appendix A of WCAP-13594, which describes the FMEA for CMT level instrumentation, is applicable to AP1000. WCAP-13594 will be added to DCD Table 1.6-1 and subsection 6.3.9 as shown below.

Design Control Document (DCD) Revision:

Table 1.6-1

MATERIAL REFERENCED

DCD Section Number	Westinghouse Topical Report Number	Title
6.3	WCAP-8966	Evaluation of Mispositioned ECCS Valves, September 1977
	WCAP-13594 (P) WCAP-13662	FMEA of Advanced Passive Plant Protection System, Revision 1, June 1998
7.2	WCAP-13594 (P) WCAP-13662	FMEA of Advanced Passive Plant Protection System, Revision 1, June 1998

6.3.9 References

1. WCAP-8966, "Evaluation of Mispositioned ECCS Valves," September 1977.

2. **WCAP-13594 (P)**, WCAP-13662 (NP~~onproprietary~~), "FMEA of Advanced Passive Plant Protection System," Revision 1, June 1998.

PRA Revision:

None

AP1000 DESIGN CERTIFICATION REVIEW

Response to Request For Additional Information

RAI Number: 420.030

Question:

420.30 (DCD 7.1.7, item 10)

DCD 7.1.7 Reference 10, NABU-DP-00014-GEN, Rev. 0, "Design Process for Common Q Safety Systems," has not been reviewed by the NRC staff. Please provide this document for staff review.

Westinghouse Response:

WCAP-15927, "Design Process for AP1000 Common Q Safety Systems," replaces NABU-DP-00014-GEN. WCAP-15927 was provided to the staff by DCP/NRC1520 on August 22, 2002.

Design Control Document (DCD) Revision:

Table 1.6-1 (Sheet 12 of 20)

MATERIAL REFERENCED

DCD Section Number	Westinghouse Topical Report Number	Title
7.1	WCAP-13382 (P) WCAP-13391	AP600 Instrumentation and Control Hardware Description, May 1992
	[*WCAP-13383*	*AP600 Instrumentation and Control Hardware and Software Design, Verification, and Validation Process Report, Revision 1, June 1996*]*
	[*WCAP-14605 (P)* *WCAP-14606*	*Westinghouse Setpoint Methodology for Protection Systems - AP600, April 1996*]*
	WCAP-14080 (P) WCAP-14081	AP600 Instrumentation and Control Software Architecture and Operation Description, June 1994
	WCAP-15775	AP1000 Instrumentation and Control Defense-in-Depth and Diversity Report, March 2002
	[*WCAP-15927*	***Design Process for AP1000 Common Q Safety Systems***]*

7.1.2.14.1 Design Process

[WCAP-13383 provides a planned design process for hardware and software development during the following life cycle stages:

- *Design requirements phase*
- *System definition phase*
- *Hardware and software development phase*
- *System test phase*
- *Installation phase*

~~NABU-DP-00014-GEN~~WCAP-15927 (Reference 10), a Common Q document, also provides a planned design process for hardware and software development during similar life cycle stages:

- *Conceptual phase*
- *System definition phase*
- *Software design phase*
- *Hardware design phase*
- *Software implementation phase*
- *Hardware implementation phase*
- *System integration phase*
- *Installation phase*

*Depending on the protection and safety monitoring system hardware used for AP1000, either WCAP-13383 or ~~NABU-DP-00014-GEN~~WCAP-15927 describe design processes that will be used for AP1000.]**

7.1.7 References

[10. *~~NABU-DP-00014-GEN~~WCAP-15927, Rev. 0, "Design Process for AP1000 Common Q Safety Systems," ~~9 March 2001~~August 2002.]**

PRA Revision:

None

AP1000 DESIGN CERTIFICATION REVIEW

Response to Request For Additional Information

RAI Number: 420.032

Question:

420.32 (DCD 7.7.1.8.1)

In the AP1000 DCD Highlight/Strikeout Version from the AP600 DCD (Revision 0 of the AP1000 DCD), there is indication on design change at Feedwater Control System. Describe the changes made from the AP600 design to the AP1000 design. Discuss the reasons for the change.

Westinghouse Response:

The changes to DCD 7.7.1.8.1 are a result of changes to the design of the feedwater system; specifically AP1000 does not have variable speed feedwater pumps. The AP1000 feedwater system components are described in DCD section 10.4.7.2.2. Because AP1000 does not have variable speed feedwater pumps, the control algorithm used to generate the speed control signal is not needed and has been removed form DCD 7.7.1.8.1.

Design Control Document (DCD) Revision:

None

PRA Revision:

None

RAI Number: 420.033

Question:

420.33 (DCD Table 7.5-8)

Explain the reason to delete "Post Accident Sampling Station Area Radiation Monitor."

Westinghouse Response:

Post-accident sampling, if necessary, would be performed from the Primary Sampling Station. DCD Tables 7.5-1 and 7.5-8 will be revised to include the Primary Sampling Station Area Radiation Monitor.

Design Control Document (DCD) Revision:

The DCD will be revised as follows

Table 7.5-1 (Sheet 12 of 12)

POST-ACCIDENT MONITORING SYSTEM

Variable	Range/ Status	Type/ Category	Qualification		Number of Instruments Required	Power Supply	QDPS Indication (Note 2)	Remarks
			Environmental	Seismic				
Primary sampling station area radiation level	10^{-1} – 10^{7} mR/hr	E3	None	None	1	Non-1E	No	

Table 7.5-8

SUMMARY OF TYPE E VARIABLES

Function Monitored	Variable	Type/Category
Containment Radiation	Containment area high range radiation level	E2
Area Radiation	Technical support center radiation level	E3
	Primary sampling station area radiation level	E3

PRA Revision:

None

AP1000 DESIGN CERTIFICATION REVIEW

Response to Request For Additional Information

RAI Number: 420.034

Question:

420.34 (DCD Table 7.5-1 & TS Table 3.3.3-1)

Explain the reason to down grade the "Hydrogen Concentration Monitor" from Category C1 to Category C3 and deleted from the Technical Specification Table 3.3.3-1, "Post-Accident Monitoring Instrumentation."

Westinghouse Response:

The safety classification of the hydrogen concentration monitors have been downgraded for the AP1000 (when compared to the AP600), consistent with the requirements of 10 CFR 50.44 which has recently been revised by the NRC. The hydrogen concentration monitors for AP1000 are not safety-related. They are properly categorized as C3 in the post-accident monitoring table, in accordance with the criteria outlined in DCD Section 7.5. The hydrogen concentration monitors are used as a backup indication of a breach of fuel cladding following a severe accident. The primary indication is the core exit thermocouples. They have also been removed from the Technical Specifications, as permitted by the revised regulations.

Design Control Document (DCD) Revision:

None

PRA Revision:

None

AP1000 DESIGN CERTIFICATION REVIEW

Response to Request For Additional Information

RAI Number: 420.035

Question:

420.35 (DCD 7.7.1.11)

DCD Section 7.7.1.11, "Diverse Actuation System" provides diverse protection in the low probability case where a common mode failure occurred at the PMS. Describe the interface design between the safety-grade PMS channels and the nonsafety-grade DAS channels and the arrangement at the actuated devices. Is the Component Interface Module (CIM) of the Common Q design utilized in the AP1000 design ?

Westinghouse Response:

The diverse actuation system (DAS) does not share sensors with the protection and safety monitoring system (PMS) or the plant control system; therefore there is no interface between DAS and PMS for input channels. Actuated equipment (e.g., valves) is shared between DAS and PMS. In these situations the DAS and the PMS will interface with the actuated equipment using separate actuation devices (e.g., separate pilot solenoids on air-operated valves, separate igniters on squib valves, separate input relays in motor control centers for motor-operated valves). The DAS actuation devices are isolated from the PMS actuation devices. This is explained in DCD section 7.7.1.11 in the "Isolation" subsection.

The component interface module (CIM) of the Common Q design will not be used to provide a DAS interface to actuated equipment that is also controlled by PMS.

Design Control Document (DCD) Revision:

None

PRA Revision:

None

AP1000 DESIGN CERTIFICATION REVIEW

Response to Request For Additional Information

RAI Number: 420.036

Question:

420.36 (DCD 7.2.2.2.6)

Explain the design difference between AP600 and AP1000 with respect in conformance to Requirements on Multiple Setpoints used for Reactor Trips (Paragraph 6.8.2 of IEEE 603-1991). AP600 does not use multiple setpoint for reactor trips, why does AP1000 need to use multiple setpoints for a particular mode of operation ?

Westinghouse Response:

There is no design difference between the AP600 and AP1000 with respect to multiple setpoints for reactor trips. The DCD change between AP600 and AP1000 regarding multiple setpoints is limited to the high neutron flux reactor trips described in DCD 7.2.1.1.1 and 7.2.1.1.2. These trips are described as four separate trips (Source Range High, Intermediate Range High, Power Range High (Low Setpoint), and Power Range High (High Setpoint). The AP600 position that multiple setpoints are not required was a result of considering these four trips to be separate and distinct trips each with its own (single) setpoint.

During the process of revising the DCD from AP600 to AP1000 it was noted that Westinghouse plants have historically described these trips as a high neutron trip with multiple setpoints when addressing conformance with IEEE 279. The DCD change was made in an attempt to describe the high neutron flux trips in a way that is consistent with the way neutron flux trips have traditionally been described.

There is no change to the design of the high neutron flux trips from AP600 to AP1000. The change is limited to the method of describing the trips.

Design Control Document (DCD) Revision:

None

PRA Revision:

None

AP1000 DESIGN CERTIFICATION REVIEW

Response to Request For Additional Information

RAI Number: 420.037

Question:

420.37 (DCD 7.3.1.2.17)

DCD Figure 7.2-1 sheet 13 Functional Diagram indicates that the Control Room Isolation and Air Supply Initiation logic has a signal to actuate MCR Pressure Relief Valves. There is no discussion in DCD 7.3.1.2.17 for this provision. Describe the design of Main Control Room Isolation system in DCD 7.3.1.2.17.

Westinghouse Response:

The main control room habitability systems are described in DCD 6.4.

The PMS system provides a signal to open the VES pressure relief isolation valves following a time delay after the VES actuation signal, as stated in DCD Figure 6.4-2 (sheet 2 of 2) Note 13. The PMS logic for the VES actuation signal is shown in Figure 7.2-1, sheet 13, and described in DCD 7.3.1.2.17.

DCD 7.3.1.2.17 will be revised as shown below to address the signal to open the pressure relief isolation valves.

Design Control Document (DCD) Revision:

7.3.1.2.17 Control Room Isolation and Air Supply Initiation

Signals to initiate isolation of the main control room, ~~and~~ to initiate the air supply, **and to open the control room pressure relief isolation valves** are generated from either of the following conditions:

1. High-2 control room air supply radioactivity level
2. Loss of ac power sources
3. Manual initiation

PRA Revision:

None

AP1000 DESIGN CERTIFICATION REVIEW

Response to Request For Additional Information

RAI Number: 420.038

Question:

420.38 (DCD 2.5.1, Table 2.5.1-4, 3.h)

AP600 DCD 2.5.1, Table 2.5.1-4 Design Commitment 3.h) states that the DAS equipment can withstand the room ambient temperature and humidity conditions that exist at the plant locations in which the DAS equipment is installed. However, in AP1000 DCD 2.5.1, Table 2.5.1-4 Design Commitment 3h) has been changed to "The DAS equipment can withstand the room ambient temperature and humidity conditions that will exist at the plant locations in which the DAS equipment is installed at the times the DAS is required to be operational." The staff considers that the DAS should be available all the time while the plant is in operation. Justify the wording changes in the Design Commitment.

Westinghouse Response:

We agree that the DAS should be available all the time while the plant is in operation. The revised wording is intended to clarify that the DAS does not need to be qualified for conditions resulting from a prolonged (more than 2 hours) loss of ac power (station blackout).

The DAS receives electrical power from the non-Class 1E UPS system, which has 2-hour batteries. Two hours after the loss of all ac power, the DAS will no longer receive power and thus will not function. When there is no ac power available, there is no HVAC in the annex building. This situation could lead to environmental conditions for which the DAS does not need to be qualified.

The following DCD changes will be made for clarification:

Design Control Document (DCD) Revision:

DCD 2.5.1, "Diverse Actuation System," will be revised as follows:

Design Description

3h) The DAS equipment can withstand the room ambient temperature and humidity conditions that will exist at the plant locations in which the DAS equipment is installed at the times **for which** the DAS is ~~required~~ **designed** to be operational.

Table 2.5.1-4 (cont.) Inspections, Tests, Analyses, and Acceptance Criteria		
Design Commitment	**Inspections, Tests, Analyses**	**Acceptance Criteria**
3.h) The DAS equipment can withstand the room ambient temperature and humidity conditions that will exist at the plant locations in which the DAS equipment is installed at the times **for which** the DAS is ~~required~~ **designed** to be operational.	Type tests, analyses, or a combination of type tests and analyses will be performed on the equipment.	A report exists and concludes that the DAS equipment can withstand the room ambient temperature and humidity conditions that will exist at the plant locations in which the DAS equipment is installed at the times **for which** the DAS is ~~required~~ **designed** to be operational.

DCD 7.7.1.11, "Diverse Actuation System" will be revised as follows:

Operability, Availability, and Testing

The diverse actuation system is designed to provide protection under all plant operating conditions in which the reactor vessel head is in place **and non-Class 1E UPS power is available.** The automatic actuation processors, in each of the two redundant automatic subsystems of the diverse actuation system, are provided with the capability for channel calibration and testing while the plant is operating. To prevent inadvertent DAS actuations during online calibration, testing activities or maintenance, the normal activation function is bypassed. Testing of the diverse actuation system is performed on a periodic basis.

PRA Revision:

None

AP1000 DESIGN CERTIFICATION REVIEW

Response to Request For Additional Information

RAI Number: 420.040

Question:

420.40 (DCD 2.5.2, item 11)

DCD 2.5.2 Design Description 11 states that the PMS hardware and Software is developed using a planned design process which provides for specific design documentation and reviews during specific life cycle stages. "Specific life cycle" should be defined in this Tier 1 material to allow the staff to perform audit and review.

Westinghouse Response:

Westinghouse agrees that the term "specific life cycle" is not well defined. The DCD Tier 1 material section 2.5.2 will be revised as shown below to remove the term and more closely match AP600.

Design Control Document (DCD) Revision:

2.5.2 Protection and Safety Monitoring System

Design Description

11. The PMS hardware and software is developed using a planned design process which provides for specific design documentation and reviews during ~~specific~~ **the following** life cycle stages~~.~~**:**

    a) **Design requirements phase, may be referred to as conceptual or project definition phase**
    b) **System definition phase**
    c) **Hardware and software development phase, consisting of hardware and software design and implementation**
    d) **System integration and test phase**
    e) **Installation phase**

Table 2.5.2-8 Inspections, Tests, Analyses, and Acceptance Criteria		
Design Commitment	**Inspections, Tests, Analyses**	**Acceptance Criteria**
11. The PMS hardware and software is developed using a planned design process which provides for specific design documentation and reviews during ~~specific~~ **the following** life cycle stages~~.~~**:** **a) Design requirements phase, may be referred to as conceptual or project definition phase** **b) System definition phase** **c) Hardware and software development phase, consisting of hardware and software design and implementation** **d) System integration and test phase** **e) Installation phase**	Inspection will be performed of the process used to design the hardware and software.	A report exists and concludes that the process defines the organizational responsibilities, activities, and configuration management controls for the following: a) Establishment of plans and methodologies. b) Specification of functional requirements. c) Documentation and review of hardware and software. d) Performance of system tests and the documentation of system test results. e) Performance of installation tests and inspections.

PRA Revision:

None

AP1000 DESIGN CERTIFICATION REVIEW

Response to Request For Additional Information

RAI Number: 420.041

Question:

420.41 (DCD 16.1, TS LCO 3.3.1)

Technical Specification Limiting Condition of Operation (LCO) 3.3.1 Conditions N and O has added a new Required Action N.2.2 and O.2.2 respectively which states that "With two interlock channels inoperable, place the Functions associated with one inoperable interlock channel in bypass and with one inoperable interlock channel in trip." Explain why this Action is required for the AP1000 design, but was not required for the AP600 design. Are all the interlock logics using 2-out-of-4 coincident logic? Why the wording in Required Actions for N.2.1 and O.2.1 are different?

Westinghouse Response:

All protection system interlocks covered by LCO 3.3.1 conditions N.2.2 and O.2.2 (P-6, P-8, P-10, and P-11) use 2-out-of-4-bypass logic.

The AP600 2-out-of-4-bypass logic allows the operator to place two channels in bypass. The protection system will then automatically treat the remaining 2 channels as 1-out-of-2. The Common Q platform does not support this automatic bypass logic feature. Therefore the AP1000 2-out-of-4-bypass logic will not allow two redundant channels to be placed in bypass simultaneously. If two channels are inoperable, the operator is expected to place one inoperable channel in bypass and the other inoperable channel in trip. The protection system will then treat the remaining two channels as 1-out-of-2, accomplishing the same logic as the AP600 2-out-of-4-bypass logic. The Technical Specification changes to LCO 3.3.1 Conditions N.2.2 and O.2.2 reflect this difference in operator response.

Design Control Document (DCD) Revision:

None

PRA Revision:

None

AP1000 DESIGN CERTIFICATION REVIEW

Response to Request For Additional Information

RAI Number: 420.042

Question:

420.42 (DCD 16.1, TS LCO 3.3.2)

Technical Specification LCO 3.3.2 Condition J has added a new Required Action J.2.2 which states that "With two interlock channels inoperable, place the Functions associated with one inoperable interlock channel in bypass and with one inoperable interlock channel in trip." Explain why this Action is required for the AP1000 design and was not required for the AP600 design. Are all the interlock logics using 2-out-of-4 coincident logic?

Westinghouse Response:

All protection system interlocks covered by LCO 3.3.2 condition J.2.2 (P-6, P-11, P-19, and P-12) use 2-out-of-4-bypass logic.

The AP600 2-out-of-4-bypass logic allows the operator to place two channels in bypass. The protection system will then automatically treat the remaining 2 channels as 1-out-of-2. The Common Q platform does not support this automatic bypass logic feature. Therefore the AP1000 2-out-of-4-bypass logic will not allow two redundant channels to be placed in bypass simultaneously. If two channels are inoperable, the operator is expected to place one inoperable channel in bypass and the other inoperable channel in trip. The protection system will then treat the remaining two channels as 1-out-of-2, accomplishing the same logic as the AP600 2-out-of-4-bypass logic. The Technical Specification change to LCO 3.3.2 Condition J.2.2 reflects this difference in operator response.

Design Control Document (DCD) Revision:

None

PRA Revision:

None

AP1000 DESIGN CERTIFICATION REVIEW

Response to Request For Additional Information

RAI Number: 435.001

Question:

Appendix 1A, "Conformance With Regulatory Guides," of the AP1000 Design Control Document (Tier 2) lists the applicable regulatory guides (RGs) with referenced IEEE Standards. The column, "Clarification/Summary Description of Exceptions," states that, for several IEEE Standards, the AP1000 uses the latest version of the industry standards which are not endorsed by a RG. However, Westinghouse states that their use should not result in a deviation from the design philosophy otherwise stated in the RG. For each of these standards, discuss (1) the difference between the latest version of the industry standard used in the design of the AP1000 and the standard endorsed by the regulatory guide, and (2) the conformance of the AP1000 to the standard.

Westinghouse Response:

DCD Appendix 1A lists sixteen regulatory guides that endorse IEEE standards applicable to the AP1000 electrical systems. Generally the endorsed standards have been superseded by a later version. In most cases the newer version is used by AP1000. In some cases, AP1000 uses an older version of the standard to preserve consistency with the AP600 design and to assure regulatory conformance.

Regulatory Guide	Endorsed IEEE Standard	Version used by AP1000
1.32, Rev. 2, 2/77	308 – 1974 450 – 1975	308 – 1991 450 – 1995
1.53, Rev. 0, 6/73	379 – 1972	379 – 2000
Revision 2 of the DCD references IEEE Std. 379-1994; however, this will be changed to IEEE Std. 379-2000 to agree with DG-1118 (Proposed Revision 1 of Regulatory Guide 1.53).		
1.63, Rev. 3, 2/87	317 – 1983 741 – 1986	317 – 1983 741 – 1997
1.73, Rev. 0, 1/74	382 – 1972	382 - 1996
1.75, Rev. 2, 9/78	384 – 1974	384 – 1981
1.89, Rev. 1, 6/84	323 – 1974	323 – 1974

1.100, Rev. 2, 6/88	344 – 1987	344 - 1987
1.106, Rev. 1, 3/77	279 – 1971	603 – 1991
1.118, Rev. 3, 4/95	338 – 1987	338 – 1987
1.128, Rev. 1, 10/78	484 – 1975	484 – 1996
1.129, Rev. 1, 2/78	450 – 1975	450 – 1995
1.131, Rev. 0, 8/77	383 – 1974	383 – 1974
1.139, Rev. 0, 5/78	338	338 – 1987
1.153, Rev. 1, 6/96	603 – 1991	603 – 1991
1.156, Rev. 0, 11/87	572 – 1985	572 – 1985
1.158, Rev. 0, 2/89	535 – 1986	535 – 1986

The AP1000 standards not endorsed by a regulatory guide do not deviate from the regulatory guide design philosophy. A comparison table between the endorsed IEEE standard and the AP1000 version follows.

Number & Section of R.G. 1.32, Rev. 2	IEEE Standard Endorsed by R.G., Section and Title	IEEE Standard used by AP1000, Section and Title	Major Difference	AP1000 Conformance
R.G. 1.32, Rev. 2	IEEE Std. 308-1974	IEEE Std. 308-1991		The guidelines are applicable to the Class 1E dc and UPS system only. AP1000 has no safety-related ac power systems.
C.1a	5.2.3(4) – Preferred Power Supply	6.2.3 – Preferred Power Supply		This requirement for access to the second offsite power source does not apply to AP1000 because AP1000 is not required to have two sources of offsite power.
C.1b	5.3.4 – Battery Charger Supply	6.3.4 – Battery Charger	The revised text defines the sizing requirements in conformance with the regulatory position.	The Class 1E dc and UPS System fully conforms to this R.G. There are no safety-related ac power systems in the AP1000. The battery charger supply is not required to meet the Independence requirement of IEEE 308-1974, section 5.2.2(3).
C.1c	IEEE Std. 450-1975	IEEE Std. 450-1995	The revised text deletes Table 2 and refers to IEEE 450-1987. IEEE 450-1995 has superceded IEEE 450-1987. IEEE 450-1995 section 5 retains the same test schedule.	Periodic testing of the batteries is a Combined License applicant responsibility.
C.1d	5.2.1, 5.2.2(3), 5.2.4	6.2.1, 6.2.2(3), 6.2.4	The revised text invokes	See DCD Appendix 1A for

Number & Section of R.G. 1.32, Rev. 2	IEEE Standard Endorsed by R.G., Section and Title	IEEE Standard used by AP1000, Section and Title	Major Difference	AP1000 Conformance
	– Independence of redundant standby sources to be per R.G. 1.6 and 1.75.	– Independence of redundant standby sources to be per R.G. 1.6 and 1.75.	IEEE 384-1981 and IEEE 387-1984, which address the requirements of R.G 1.6 and R.G. 1.75.	AP1000 conformance with R.G. 1.6 and R.G. 1.75.
C.1e	4.9 – Connection of non-Class 1E equipment to Class 1E system should be per R.G. 1.75.	5.11 – Connection of non-Class 1E equipment to Class 1E system should be per R.G. 1.75.	The revised text invokes IEEE Std. 384-1981, which addresses the requirements of R.G. 1.75.	See DCD Appendix 1A for AP1000 conformance with R.G. 1.75.
C.1f	5.2.4 – Selection of diesel generator capacity	6.2.4 – Selection of diesel generator capacity	The revised text invokes IEEE 387-1984, which addresses R.G. 1.9 requirements on standby power source capacity.	The guidelines are not applicable to the AP1000 because there are no Class 1E diesel generators in the AP1000 design.
C.2a	8.2 and 8.3 shared electric systems for multi-unit nuclear power plants shall follow R.G. 1.81.	8.2 and 8.3 shared electric systems for multi-unit nuclear power plants shall follow R.G. 1.81.	The IEEE standard text is essentially the same. The revised text conforms to the intent of the R.G.	The AP1000 design certification basis is addressing only a single-unit plant; therefore, the multi-unit design considerations are not applicable.
C.2b	7 – Table 3 Suggested Alternatives with Degraded Class 1E Power Systems Conditions	No corresponding section in the current standard.	Section 7 and Table 3, which were identified as unacceptable by R.G.1.32, position 2.b, have been deleted from the current standard.	Fully conforms to R.G.

Number & Section of R.G. 1.53, Rev. 0	IEEE Standard Endorsed by R.G., Section and Title	IEEE Standard used by AP1000, Section and Title	Major Difference	AP1000 Conformance
R.G. 1.53, Rev. 0	IEEE Std. 379 - 1972	IEEE Std. 379 – 2000	IEEE Std. 379-2000 is endorsed by DG-1118.	
C.2	5.2 – Undetectable Failures	5.2 – Nondetectable Failures	The current version of the standard defines nondetectable failures and clarifies the analysis requirements.	Fully conforms to R.G.
C.3	6.2 – Channels	6.1 and 6.2 – Procedure and Systems Portions Analysis	The current version of the standard, Sections 6.1 and 6.2, has been updated to include specific statements that conform to the regulatory position.	Fully conforms to R.G.
C.4	6.3 and 6.4 – Protection System Logic and Actuator Circuit	6.2.2, 6.2.3, and 6.2.4 – System Logic, Actuation Devices, & Electrical power Supplies	The current version of the standard addresses the regulatory position by eliminating potentially ambiguous interpretation.	Fully conforms to R.G.

Number & Section of R.G. 1.63, Rev. 3	IEEE Standard Endorsed by R.G., Section and Title	IEEE Standard used by AP1000, Section and Title	Major Difference	AP1000 Conformance
R.G. 1.63, Rev. 3	IEEE Std. 317-1983	IEEE Std. 317-1983	AP1000 uses the endorsed version of this standard.	Fully conforms to R.G.
R.G. 1.63, Rev. 3	IEEE Std. 741-1986, Section 5.4	IEEE Std. 741-1997, Section 5.4	None	Fully conforms to R.G.

Number & Section of R.G. 1.73, Rev. 0	IEEE Standard Endorsed by R.G., Section and Title	IEEE Standard used by AP1000, Section and Title	Major Difference	AP1000 Conformance
R.G. 1.73, Rev. 0	IEEE Std. 382-1972	IEEE Std. 382-1996		
C.1	Part I, Section 4 – Type Test Description	Part I, Section 6.1 – Type Test Plan	The current version of the standard, Part I, Section 6.1, includes specific statements that conform to the regulatory position.	Fully conforms to R.G.
C.2	Part I, Section 4.5.2 – Test Sequence	Part II – Qualification Cases	The current version of the standard, Part II, includes specific statements that conform to the regulatory position.	Fully conforms to R.G.
C.3	Part I, Section 4.4 – Accident or Other Special Environment Simulation	Part I, Section 6.1 – Type Test Parameter Values	The current version of the standard, Part I, Section 6.1, includes specific statements that conform to the regulatory position.	Fully conforms to R.G.
C.4	Part II, Section 1 – Exposure to Nuclear Radiation	Part III, Section 4 – Normal Radiation Aging Test	Figures 4 and 5 of IEEE 382-1996 provide radiation test data.	Fully conforms to R.G.
C.5	Only applicable to gas-cooled reactors			Not applicable to AP1000
C.6	Part I, Section 6 – Standards References	Part I, Section 2 -- References	The applicability of specific standards has been covered in the DCD.	Fully conforms to R.G.

Number & Section of R.G. 1.75, Rev. 2	IEEE Standard Endorsed by R.G., Section and Title	IEEE Standard used by AP1000, Section and Title	Major Difference	AP1000 Conformance
R.G. 1.75, Rev. 2	IEEE Std. 384-1974	IEEE Std. 384-1981		
C.1	3 – Definitions: isolation device	3 – Definitions: isolation device	None	Fully conforms to R.G. Two fuses in series may be used as an isolation device for Class 1E and non-Class 1E isolation.
C.2	3 – Definitions: raceway	3 – Definitions: raceway	The definition of "raceway" has been revised to delete "interlocked armor enclosing cable" to be construed as a raceway.	Fully conforms to R.G.
C.3	4.3 – Methods of Separation	5.2 – Methods of Achieving Independence	The revised text defines additional methods to achieve independence.	Conforms to R.G. by alternate means
C.4	4.5(1) – Associated Circuits	5.5 – Associated Circuits	None	Fully conforms to R.G.
C.5	4.5 – Associated Circuits – concluding note	5.5.2 – Criteria – concluding note	None	The R.G. supplement clarifies the application of the "Note." The current standard does not categorically deviate from the R.G. position.
C.6	4.5(3), 4.62., and 5.1.1.2 – Analysis Document Submission	5.5 and 5.6 – Analysis Document Submission	None	Fully conforms to R.G.
C.7	4.6.2 – No Blanket Exemption for Non-Class 1E I&C Circuits	5.6 – Non-Class 1E Circuits; General Criteria	The revised text removes the exemption for instrumentation and control circuits.	Fully conforms to R.G.

Number & Section of R.G. 1.75, Rev. 2	IEEE Standard Endorsed by R.G., Section and Title	IEEE Standard used by AP1000, Section and Title	Major Difference	AP1000 Conformance
C.8	5.1.1.1 – Separation of Redundant Circuits in a Confined Space	6.1 -- Separation of Redundant Circuits in a Confined Space	The revised text elaborates on the minimum separation distances for various routing conditions and identifies testing/analysis requirements for special cases.	Fully conforms to R.G.
C.9	5.1.1.3 – Cable Splices in the Raceways Prohibited	6.1.1.2 -- Cable Splices in the Raceways Prohibited	The revised section imposes cable qualification requirements in accordance with IEEE Std. 383-1974. This requirement addresses both cables and the field splices to withstand fire hazards.	The current standard conforms to the R.G. position by alternate means.
C.10 & C.11	5.1.2 – Identification	6.1.2 – Identification	The revised text conforms to the intent of the R.G.	Fully conforms to R.G.
C.12	5.1.3 – Cable Spreading Area	6.1.3 – Nonhazard Area	The revised text defines the requirements for nonhazard areas, and routing of the power circuit cables in enclosed raceways, which address the underlying reasons of the R.G. position.	The current standard conforms to the R.G. position by alternate means. See DCD subsection 8.3.2.4.2 for exceptions related to spacial separation between separation groups.
C.13	Figure 2	Figures 4, 5, 6, and 7	The revised figures clarify the requirements. There is no significance attached to the tray width by virtue of the fact	Fully conforms to R.G.

Number & Section of R.G. 1.75, Rev. 2	IEEE Standard Endorsed by R.G., Section and Title	IEEE Standard used by AP1000, Section and Title	Major Difference	AP1000 Conformance
			that tray dimensions are not included.	
C.14	5.2.1 – Standby Generating Units	6.2, 5.7, and 5.9 – Standby Power Supply	The revised text imposes sufficient requirements to ensure the independence of the redundant standby generating units.	This requirement for independence of Class 1E standby generating units does not apply to AP1000 because AP1000 does not have Class 1E standby generating units.
C.15	5.3.1 – Independent Ventilation Required to Preserve Redundant Class 1E Battery Operation	6.3, 5.7, and 5.9 – Independent Ventilation Required to Preserve Redundant Class 1E Battery Operation	The revised text imposes sufficient requirements to ensure the independence of the redundant batteries.	Fully conforms to R.G.
C.16	5.7 – Instrumentation Cabinets	6.6 and 6.7 – Control Switchboard & Instrumentation Cabinets	The revised text conforms to the intent of the R.G.	Fully conforms to R.G.

Number & Section of R.G. 1.89, Rev. 1	IEEE Standard Endorsed by R.G., Section and Title	IEEE Standard used by AP1000, Section and Title	Major Difference	AP1000 Conformance
R.G. 1.89, Rev. 1	IEEE Std. 323-1974	IEEE Std. 323-1974	AP1000 uses the endorsed version of this standard.	Fully conforms to R.G. as clarified in DCD Appendix 1A.

Number & Section of R.G. 1.100, Rev. 2	IEEE Standard Endorsed by R.G., Section and Title	IEEE Standard used by AP1000, Section and Title	Major Difference	AP1000 Conformance
R.G. 1.100, Rev. 2	IEEE Std. 344-1987	IEEE Std. 344-1987	AP1000 uses the endorsed version of this standard.	Fully conforms to R.G.

Number & Section of R.G. 1.106, Rev. 1	IEEE Standard Endorsed by R.G., Section and Title	IEEE Standard used by AP1000, Section and Title	Major Difference	AP1000 Conformance
R.G. 1.106, Rev. 1	IEEE Std. 279-1971	IEEE Std. 603-1991	None	Fully conforms to R.G. 1.106 according to the guidance of R.G. 1.153.

Number & Section of R.G. 1.118, Rev. 3	IEEE Standard Endorsed by R.G., Section and Title	IEEE Standard used by AP1000, Section and Title	Major Difference	AP1000 Conformance
R.G. 1.118, Rev. 3	IEEE Std. 338-1987	IEEE Std. 338-1987	AP1000 uses the endorsed version of this standard.	Fully conforms to R.G.

Number & Section of R.G. 1.128, Rev. 1	IEEE Standard Endorsed by R.G., Section and Title	IEEE Standard used by AP1000, Section and Title	Major Difference	AP1000 Conformance
R.G. 1.128, Rev. 1	IEEE Std. 484-1975	IEEE Std. 484-1996		
C.1	4.1.4 – Ventilation	5.4 – Ventilation	None	Fully conforms to R.G.
C.2	4.2.1 – Location	5.1(d) – Location	None	Fully conforms to R.G.
C.3	4.2.2 – Mounting	5.2 – Mounting	None	Fully conforms to R.G.
C.4	5.3.2 – Acceptance Test	6.3.3 – Acceptance Test	Revised text references IEEE 450-1995.	Fully conforms to the intent of the R.G. to use the latest version of IEEE 450.
C.5	7 – References	7 – References	The latest version deleted many of the IEEE standards references found in the approved version but not endorsed by the R.G.	Fully conforms to R.G.
C.6	Sections containing the verb "should" to be treated the same as requirements of the standard.	Sections containing the verb "should" to be treated the same as requirements of the standard.	None	Fully conforms to R.G.
C.6.a	4.1.1 – Location, Item (2)	5.1 – Location, Item (c)	Latest version includes minor wording changes for clarification.	Fully conforms to R.G.
C.6.b	4.1.1 – Location, Item (4)	5.1 – Location, Item (f)	Latest version includes minor wording changes for clarification.	Fully conforms to R.G.
C.6.c	4.1.1 – Location, Item (5)	5.1 – Location, Item (g)	Latest version includes minor wording changes for clarification.	Fully conforms to R.G.
C.6.d	4.1.2 – Mounting, Item (2)	5.2 – Mounting, Item (b)	The latest IEEE version states that a three-tier rack is acceptable provided the requirements of 5.1(f)	Fully conforms to R.G.

Number & Section of R.G. 1.128, Rev. 1	IEEE Standard Endorsed by R.G., Section and Title	IEEE Standard used by AP1000, Section and Title	Major Difference	AP1000 Conformance
			are met and maintenance is not adversely affected. AP1000 has a two-step battery rack configuration.	
C.6.e	4.1.5 – Instrumentation and Alarms	5.5 – Instrumentation and Alarms	The latest version added instrumentation to measure current through the battery.	Fully conforms to R.G.
C.6.f	5.1.2 – Unpacking, Item (3)	6.1.2 – Unpacking, Item (c)	Added requirement to add electrolyte on low level.	Fully conforms to R.G.
C.6.g	5.1.3 – Storage, Item (1)	6.1.3 – Storage, Item (a)	None	Fully conforms to R.G.
C.6.h	5.2.3 – Preoperational Care	None	The Preoperational Care section has been deleted from the latest version of the standard.	Conforms to the intent of the R.G. The AP1000 batteries will be maintained in accordance with IEEE Std 450-1995 after battery assembly is complete to the stage of intercell connections.
C.6.i	5.3.1 – Freshening Charge	6.3.2 – Data Collection	The latest version includes wording changes for clarification. 6.3.2(b) has been revised to reference manufacturer's recommendations rather than specific values.	Fully conforms to R.G.
C.6.j	6 – Records	7 – Records	The latest version removes the item to retain quality assurance	Fully conforms to R.G.

Number & Section of R.G. 1.128, Rev. 1	IEEE Standard Endorsed by R.G., Section and Title	IEEE Standard used by AP1000, Section and Title	Major Difference	AP1000 Conformance
			records. This requirement can be found elsewhere.	

Number & Section of R.G. 1.129, Rev. 1	IEEE Standard Endorsed by R.G., Section and Title	IEEE Standard used by AP1000, Section and Title	Major Difference	AP1000 Conformance
R.G. 1.129, Rev. 1	IEEE Std. 450-1975	IEEE Std. 450-1995		Not applicable to AP1000 design certification. Maintenance, testing and replacement of batteries are the Combined License applicant's responsibility.

Number & Section of R.G. 1.131, Rev. 0	IEEE Standard Endorsed by R.G., Section and Title	IEEE Standard used by AP1000, Section and Title	Major Difference	AP1000 Conformance
R.G. 1.131, Rev. 0	IEEE Std. 383-1974	IEEE Std. 383-1974	AP1000 uses the endorsed version of this standard.	Fully conforms to R.G. The insulating and jacketing material for electrical cables are selected to meet the fire and flame test requirements of IEEE Standard 1202 or IEEE Standard 383 excluding the option to use the alternate flame source, oil or burlap.

Number & Section of R.G. 1.139, Rev. 0	IEEE Standard Endorsed by R.G., Section and Title	IEEE Standard used by AP1000, Section and Title	Major Difference	AP1000 Conformance
C.5	IEEE Std. 338 (no specific version)	IEEE Std. 338-1987	None	Fully conforms to R.G. IEEE Std. 338-1987 is endorsed by R.G. 1.118.

Number & Section of R.G. 1.153, Rev. 1	IEEE Standard Endorsed by R.G., Section and Title	IEEE Standard used by AP1000, Section and Title	Major Difference	AP1000 Conformance
R.G. 1.153, Rev. 1	IEEE Std. 603-1991 (including the correction sheet dated January 30, 1995)	IEEE Std. 603-1991	AP1000 uses the endorsed version of this standard.	Fully conforms to R.G.

Number & Section of R.G. 1.156, Rev. 0	IEEE Standard Endorsed by R.G., Section and Title	IEEE Standard used by AP1000, Section and Title	Major Difference	AP1000 Conformance
R.G. 1.156, Rev. 0	IEEE Std. 572-1985	IEEE Std. 572-1985	AP1000 uses the endorsed version of this standard.	Fully conforms to R.G.

Number & Section of R.G. 1.158, Rev. 0	IEEE Standard Endorsed by R.G., Section and Title	IEEE Standard used by AP1000, Section and Title	Major Difference	AP1000 Conformance
R.G. 1.158, Rev. 0	IEEE Std. 535-1986	IEEE Std. 535-1986	AP1000 uses the endorsed version of this standard.	Fully conforms to R.G.

Design Control Document (DCD) Revision:

APPENDIX 1A

CONFORMANCE WITH REGULATORY GUIDES

Criteria Section	Referenced Criteria	AP1000 Position	Clarification/Summary Description of Exceptions
DIVISION 1 – Power Reactors			
Reg. Guide 1.53, Rev. 0, 6/73 - Application of the Single-Failure Criterion to Nuclear Power Plant Protection Systems			
General	IEEE Std. 379-1972	Exception	Regulatory Guide 1.53 endorses IEEE Std. 379-72 (Reference 10), which has been superseded by IEEE Std. 379~~-1994~~-2000 (Reference 11). The AP1000 uses the latest version of the industry standards (as of 4/2001). This version is not endorsed by a regulatory guide but its use should not result in deviation from the design philosophy otherwise stated in Regulatory Guide 1.53. **IEEE Std. 379-2000 is endorsed by DG-1118 (Proposed Revision of Regulatory Guide 1.53).** The guidelines are applicable to safety-related dc power systems. There are no safety-related ac power sources in the AP1000.
Reg. Guide 1.73, Rev. 0, 1/74 - Qualification Tests of Electric Valve Operators Installed Inside the Containment of Nuclear Power Plants			
General	IEEE Std. 382-1972	Exception	Qualification of valve appurtenances, such as motor operators, solenoid valves, and limit switches, is in accordance with this regulatory guide. For safety-related motor-operated valves located inside containment, environmental qualification is performed in accordance with IEEE Standards 382-1996 (Reference 21) and 323-1974 (Reference 22). ~~The AP1000 does not comply with Part III 2.3.2 of Reference 21.~~
C.1-6		Conforms	

Reg. Guide 1.75, Rev. 2, 9/78 - Physical Independence of Electric Systems

General	IEEE Std. 384-1974	Exception	Regulatory Guide 1.75 endorses IEEE Std. 384-74 (Reference 23) which has been superseded by a later revision, IEEE Std. 384-~~92~~ 81 (Reference 24). ~~Due to the AP1000 commitment to use the latest version of the industry standards (as of 4/2001), i~~It is the later version that is used for the referenced purposes. This version has not yet been endorsed by a regulatory guide. The differences between the two revisions are not expected to contribute to conflicting design configurations because the jurisdiction of Regulatory Guide 1.75 with regard to the onsite ac power sources is limited. Specifically, since the AP1000 does not use safety-related ac power sources, the guidelines of Regulatory Guide 1.75 are applicable on a very limited basis to provide guidance on the Class 1E/non-Class 1E electrical separation and isolation for the following ac components that employ safety-related and nonsafety-related circuits: a) Class 1E dc battery chargers b) Reactor coolant pump switchgear c) Class 1E dc and UPS system regulating transformers. See subsection 8.3.2.4.2 for exceptions related to spacial separation between separation groups. Two fuses in series may be used as an isolation ~~devise~~ **device** for Class 1E and non-Class 1E isolation.

Reg. Guide 1.118, Rev. 43, 4/95 - Periodic Testing of Electric Power and Protection Systems

General	IEEE Std. 338-1987	Conforms	Guidelines apply to safety-related dc power systems. Since the AP1000 has no safety-related ac power sources, the guidelines do not apply to the AP1000 ac power sources.

1A.1 References

10. IEEE 379-72, IEEE ~~Standard~~ **Trial-Use Guide for the** Application of the Single-~~-~~Failure Criterion to Nuclear Power Generating Station ~~Class 1E~~**Protection** Systems, ~~1994~~**1972**.

11. IEEE 379-~~1994~~**2000**, IEEE Standard Application of the Single--Failure Criterion to Nuclear Power Generating Station ~~Class 1E~~**Safety** Systems, ~~1988~~**2000**.

21. IEEE 382-1996, IEEE Standard for Qualification of ~~Safety-Related Valve~~ Actuators **for Power-Operated Valve Assemblies with Safety-Related Functions for Nuclear Power Plants,** ~~1985~~**1996**.

22. IEEE 323-1974, IEEE Standard for Qualifying Class 1E Equipment for Nuclear Power Generating Stations, ~~1983~~**1974**.

23. IEEE 384-74, IEEE **Trial-Use** Standard **Criteria** for ~~Independence~~ **Separation** of Class 1E Equipment and Circuits, 1974.

24. IEEE 384-~~92~~**81**, IEEE Standard **Criteria** for Independence of Class 1E Equipment and Circuits, 1981.

30. ~~IEEE Std. 338-1977, IEEE Standard Criteria for the Periodic Surveillance Testing of Nuclear Power Generating Stations Safety Systems, 1977~~**Not used**.

3.2.2.5 Equipment Class C

Class C is a safety-related class equivalent to ANS Safety Class 3. It applies to other safety-related functions required to mitigate design basis accidents and other design basis events. Minor leakage will not prevent Class C structures, systems, and components from meeting the safety-related function, either from the regard of radiation dose or system functioning.

This class also applies to equipment that, upon rupturing, would cause dose limits for unrestricted areas, as specified in 10 CFR 20, to be exceeded or would cause a loss of core cooling.

10 CFR 21 applies to Class C structures, systems, and components. Class C structures, systems, and components use codes and standards consistent with the guidelines for NRC Quality Group C. Class C structures, systems, and components are seismic Category I except those noted below which are not required to provide a safety-related function following a seismic event. 10 CFR 50, Appendix B and ASME Code, Section III, Class 3 apply. In addition to these requirements, for systems that provide emergency core cooling functions, full radiography in accordance with the requirements of ASME Code, Section III, ND-5222 will be conducted on the piping butt welds during construction. For Class C air and gas storage tanks fabricated without welding, ASME Code, Section VIII, Appendix 22 may be used in lieu of Section III, Class 3. 10 CFR 50, Appendix B requirements and 10 CFR 21 apply to the manufacture of safety-related air and gas storage tanks. For core support structures ASME Code, Section III, Subsection NG applies. For electrical systems, appropriate IEEE standards, including IEEE standard 323-~~83~~**74** (Reference 3) and IEEE standard 344-87 (Reference 4), apply.

3.2.6 References

3. IEEE~~/ANSI~~ 323-~~83~~**74**, "IEEE Standard for Qualifying Class 1E Equipment for Nuclear Power Generating Stations."

3.8.2.1.6 Electrical Penetrations

Figure 3.8.2-4, sheet 6, shows a typical 12-inch-diameter electrical penetration. The penetration assemblies consist of three modules (or six modules in a similar 18-inch-diameter penetration) passing through a bulkhead attached to the containment nozzle. Electrical design of these penetrations is described in subsection 8.3.1.1.5.
Electrical penetrations are designed to maintain containment integrity under design basis accident conditions, including pressure, temperature, and radiation. Double barriers permit testing of each assembly to verify that containment integrity is maintained. Design and testing is according to IEEE Standard 317-83 and IEEE Standard 323-~~83~~74.

3.10.2.2 Seismic and Operability Qualification of Active Mechanical Equipment

The accelerations used for the static valve qualification are equivalent, as justified by analysis, to 6.0g in two orthogonal horizontal directions and 6.0g vertical. These values are derived from the test response spectra in IEEE 382-~~1985~~1996. The piping design maintains the operator accelerations to these levels. If the natural frequency of the valve is less than 33 hertz, a dynamic analysis of the valve is performed to determine the equivalent acceleration to be applied during the static test.

3.10.2.3 Valve Operator Qualification

Active valve motor operators, position sensors, and solenoid valves are seismically qualified according to IEEE 382-~~1985~~1996, as discussed in the appropriate equipment qualification data packages.

7.1.4.2 Conformance With Industry Standards

- IEEE 379-~~1994~~2000; "IEEE Standard Application of the Single-Failure Criterion to Nuclear Power Generating Station Safety Systems"

7.2.2.2.2 Conformance to the Single Failure Criterion for Reactor Trip (Paragraph 5.1 of IEEE 603-1991, IEEE 379-~~1994~~2000)

A single failure in the protection and safety monitoring system or the reactor trip actuation divisions does not prevent a reactor trip, even when a reactor trip channel is bypassed for test or maintenance. Conformance of the equipment to this requirement is discussed in WCAP-15776 (Reference 2). In addition to the redundancy of equipment, diversity of reactor trip functions is incorporated. Most Condition II, III, or IV events requiring a reactor trip are protected by trips from diverse parameters. For example, reactor trip, because of an uncontrolled rod cluster control assembly bank withdrawal at power, may occur on power range high neutron flux, overtemperature, overpower, pressurizer high pressure or pressurizer high water level. Reactor trip on complete loss of reactor coolant flow may occur on low flow or from the diverse parameter of low reactor coolant pump speed.

8.1.4.3 Design Criteria, Regulatory Guides, and IEEE Standards

- IEEE 379-~~1994~~2000, IEEE Standard Application of the Single Failure Criterion to Nuclear Power Generating Station Safety Systems. Refer to Regulatory Guide 1.53.

15.0.8 Plant Systems and Components Available for Mitigation of Accident Effects

In determining which systems are necessary to mitigate the effects of these postulated events, the classification system of ANSI N18.2-1973 (Reference 1) is used. The design of safety- related systems (including protection systems) is consistent with IEEE Standard 379-~~1994~~-2000 and Regulatory Guide 1.53 in the application of the single-failure criterion. Conformance to Regulatory Guide 1.53 is summarized in subsection 1.9.1.

PRA Revision:

None

AP1000 DESIGN CERTIFICATION REVIEW

Response to Request For Additional Information

RAI Number: 435.002

Question:

Section 3.1, "Conformance with Nuclear Regulatory Commission General Design Criteria," states AP1000 plant design supports an exemption to the requirements of GDC 17 for two physically independent offsite circuits by providing safety-related systems for core cooling and containment integrity.

Section 8.2.3, "Conformance to Criteria," refers to Section 3.1 as described above. Section 8.2, "Offsite Power System," does not describe the exemption to GDC 17 regarding two independent offsite circuits. The exemption should be discussed in detail in the main body of the offsite power system.

Westinghouse Response:

Westinghouse agrees to add details regarding the exemption to GDC 17 to the main body of DCD section 8.2.

Design Control Document (DCD) Revision:

8.2.3 Conformance to Criteria

The offsite sources are not Class 1E. Commercial equipment is manufactured to the industrial standards listed in subsection 8.2.6. The design meets General Design Criterion 1. Unit trips occur at the generator breaker and do not cause the loss of the preferred power source to the plant electrical systems. The AP1000 does not require ac power sources for mitigating design basis events; Chapter 15.0 describes the design bases assumptions utilized for analysis of these events. ~~The AP1000 meets the intent of General Design Criteria 17 as outlined in Section 3.1.~~

The AP1000 plant design supports an exemption to the requirement of GDC 17 for two physically independent offsite circuits by providing safety-related passive systems for core cooling and containment integrity, and multiple nonsafety-related onsite and offsite electric power sources for other functions. See Section 6.3 for additional information on the systems for core cooling.

A reliable dc power source supplied by batteries provides power for the safety-related valves and instrumentation during transient and accident conditions.

The Class 1E dc and UPS system is the only safety-related power source required to monitor and actuate the safety-related passive systems. Otherwise, the plant is designed to maintain core cooling and containment integrity, independent of nonsafety-related ac power sources indefinitely. The only electric power source necessary to accomplish these safety-related functions is the Class 1E dc and UPS power system which includes the associated safety-related 120V ac distribution switchgear.

Although the AP1000 is designed with reliable nonsafety-related offsite and onsite ac power that are normally expected to be available for important plant functions, nonsafety-related ac power is not relied upon to maintain the core cooling or containment integrity.

The nonsafety-related ac power system is designed such that plant auxiliaries can be powered from the grid under all modes of operation. During loss of offsite power, the ac power is supplied by the onsite standby diesel-generators. Preassigned loads and equipment are automatically loaded on the diesel-generators in a predetermined sequence. Additional loads can be manually added as required. The onsite standby power system is not required for safe shutdown of the plant.

Conformance with General Design Criterion 18 is provided by the test and inspection capability of the system.

PRA Revision:

None

AP1000 DESIGN CERTIFICATION REVIEW

Response to Request For Additional Information

RAI Number: 435.003

Question:

The frequency of catastrophic failures of the main step-up transformers due to lightning or solar storms has been greater than what was previously anticipated. Describe the design for lightning and solar storm protection for the main step-up transformers. Note that the solar storm cycle is 11 to 12 years.

Westinghouse Response:

The main step-up transformers are protected from lightning coming from two sources. Lightning can affect transformers by both a direct strike to the transformer and also by lightning propagating to the transformer over the transmission lines connected to it. Therefore, two means of protection are used. Grounded shield wires are located above the equipment in the transformer area, including the main step-up transformers, to intercept lightning strikes in the area and conduct them to ground. Suitably rated surge arresters are located on the high voltage side of the main step-up transformers to reduce the magnitudes of incoming, lightning-caused, voltage surges to levels which are well within the insulation withstand capability of the transformer.

The detailed design of direct-stroke lightning protection and the associated grounding depends on the lightning activity at the plant site and the soil resistivity of the ground. It is site-specific and will be addressed by the Combined License applicant. (See DCD Section 8.3.3.)

The main step-up transformer design includes margins to prevent core saturation and localized overheating due to solar induced currents. The design of the off-site power system will also address the effects of solar storms. The Combined License applicant is responsible for the design of the off-site power system. (See DCD Sections 1.8(2) and 8.2.5.)

Design Control Document (DCD) Revision:

None

PRA Revision:

None

AP1000 DESIGN CERTIFICATION REVIEW

Response to Request For Additional Information

RAI Number: 435.004

Question:

Discuss the assumptions used in sizing the Class 1E batteries to include the simultaneous starting of all connected loads with the maximum inrush for the first minute.

Westinghouse Response:

During normal operation each dc bus is connected to its corresponding battery and battery charger, as well as the dc loads. The dc buses normally receive power from the battery chargers with the batteries held on float charge. If the charger or its power source fails the battery will begin to supply the loads. The dc loads will not lose power during this transition; therefore, no inrush will be generated by the transition from charger to battery.

The governing factor for the AP1000 Class 1E battery size is the steady state loading condition. The steady state loads are required to operate for a long period of time; 0 to 24 hours and 0 to72 hours, compared to 0 to 2 hours normally considered for the conventional nuclear plants.

For the battery sizing calculation, battery loads are identified as either defined or random loads. The continuous (defined) loads are significantly larger than the random loads. The batteries are initially sized based on the defined loads.

Random loads (primarily motor-operated valves) are then analyzed to determine the appropriate time interval the load can be anticipated. For example, containment isolation valves are assumed to stroke within the first 6 hours. Maximum inrush current has been considered for the valves. The duration for the random loads is conservatively assumed as one minute. Also, all random loads occurring within the same one-minute period have been added to get the total load for that minute. It is further assumed that once the valves stroke to their safe position they will not stroke again. The random loads are then added to the battery loads at the most critical time of the duty cycle within the appropriate time window. This simulates the worst-case load on the battery. This technique meets the requirements of IEEE 485-1997.

Design Control Document (DCD) Revision:

None

PRA Revision:

None

AP1000 DESIGN CERTIFICATION REVIEW

Response to Request For Additional Information

RAI Number: 435.005

Question:

Per IEEE Std 485, "Recommended Practice for Sizing Lead-Acid Batteries for Stationary Application," discuss whether battery sizing calculations have taken into account (1) temperature correction factor (2) design margin, and (3) aging factor.

Westinghouse Response:

The AP1000 battery sizing calculations meet the requirements of IEEE 485-1997. A temperature correction factor of 1.11 (60ºF) is used. A design margin of 10% is used. An aging factor of 1.25 is used.

Design Control Document (DCD) Revision:

None

PRA Revision:

None

AP1000 DESIGN CERTIFICATION REVIEW

Response to Request For Additional Information

RAI Number: 435.006

Question:

Standard molded-case breakers can be used in direct current (dc) circuits. However, the dc interrupting rating will generally be ▯ to 1/3 of the alternating current (ac) value. Many manufacturers publish no dc application data for these breakers. Discuss how the design will ensure that molded-case breakers will have adequate dc interrupting ratings.

Westinghouse Response:

The limited availability of molded-case breakers with a high dc interrupting rating is known in the industry. However, there are manufacturers who can supply molded case breakers with UL-listed interrupting ratings for dc circuits. The application of molded-case circuit breakers in the AP1000 dc distribution system is as follows:

- The AP1000 design generally utilizes fusible disconnect switches in the Class 1E dc system. If a molded-case circuit breaker is used in a particular circuit, it will be sized to meet the dc interrupting rating requirement. Proper documentation will be obtained to ensure that the molded-case breakers have adequate dc interrupting rating.

- The non-Class 1E dc power system has molded-case circuit breakers. These breakers will have UL-listed current interrupting ratings for dc applications.

Design Control Document (DCD) Revision:

None

PRA Revision:

None

AP1000 DESIGN CERTIFICATION REVIEW

Response to Request For Additional Information

RAI Number: 435.007

Question:

Discuss the operating voltage range for the safety-related dc power system as described in IEEE Std 946. Discuss the design to ensure that the voltage range will envelope the design-basis accident conditions and that the batteries are sized to provide adequate voltages at the end of the battery duty cycle.

Westinghouse Response:

The AP1000 dc power system design is based on IEEE Std 946-1992, "IEEE Recommended Practice for the Design of DC Auxiliary Power Systems for Generating Stations." The batteries have been sized in accordance with IEEE Std 485-1997. The battery loads used for sizing the batteries are shown in DCD Tables 8.3.2-1, 2, 3, & 4. These loads include continuous, defined noncontinuous loads, and random loads. The number of plates selected for each cell is based on battery manufacturer's curve for end-of-discharge cycle voltage of 1.75V/cell, i.e., battery end-of-discharge voltage of 105 Vdc. Also, aging factor (1.25), temperature factor (1.11) for minimum operating temperature of 60ºF, and design margin of 1.1, as recommended by IEEE 485, have been used to calculate the number of plates. The selected batteries and battery charger sizes and the Class 1E dc power distribution configuration are shown on DCD Figure 8.3.2-1 (sheets 1 and 2).

The operating voltage range under all operating modes, including charging, equalizing, and end-of-discharge is 105 to 140 Vdc. The maximum equalizing voltage for batteries is 140 Vdc and the end-of-discharge voltage is 105 Vdc. The nominal system voltage is 125 Vdc.

The operating voltage range for the equipment and the associated loads will be specified in accordance with Table 1 of IEEE Std 946-1992 to ensure reliable operation of the dc power system for the full range of operating voltages, including charging, equalizing, and end-of-discharge. Also, as described above and in the response to RAI 435.004, the batteries have been sized to provide steady state and transient power within the required voltage range of 105 to 140 Vdc.

Design Control Document (DCD) Revision:

None

PRA Revision:

None

RAI Number: 435.008

Question:

Failures of the uninterruptible power supply (UPS) system constitute one of the main causes of forced plant outages. Discuss the design to ensure that the failure or unavailability of a single battery, battery charger, or inverter will not result in a plant trip.

Westinghouse Response:

A failure or the unavailability of a single safety-related battery, battery charger or inverter will not result in a plant trip or a forced outage.

DCD subsection 8.3.2 provides a description of the dc power systems. The dc power systems include a spare Class 1E battery bank with a spare battery, battery charger, and permanently installed cable connections that allow the spare bank to be connected to the affected bus by a plug-in, twist-lock disconnect. The spare bank can be aligned to either the Class 1E or the non-Class 1E dc power system, if component failures occur.

Following a loss of either a Class 1E or a non-Class 1E battery charger, which is normally providing power to the associated dc bus, the battery would immediately supply the bus, maintaining continuity of power to the affected dc bus. Following a loss of either a Class 1E or a non-Class 1E battery, the battery charger would continue to supply power to the dc bus. With the loss of either a battery charger or a battery, continuity of power to the associated dc bus is maintained. Therefore, there is no effect on plant operation since the spare battery can be aligned while the faulty component is repaired.

Following the loss of either a Class 1E or a non-Class 1E inverter, the associated dc bus remains energized and the dc loads are not affected. The 208Y/120-Vac instrumentation and control power bus associated with the failed inverter remains continuously energized. Each uninterruptible power supply (UPS) includes an inverter and a backup voltage regulating transformer that can supply the associated instrumentation and control bus if the inverter fails. The UPS includes a static transfer switch that automatically transfers the bus to the regulated power source if power is unavailable from the inverter. A manual mechanical bypass switch is also included in the UPS to provide a second connection for the bus to the backup regulated power source when the inverter is removed from service for maintenance.

Therefore, with a failure of a single battery charger or a single battery, power is continuously maintained to the dc buses. With a failure of an inverter, power to the instrumentation and control power bus is automatically transferred to a regulated backup power source. With a

single failure or the unavailability of these components, the associated buses remain energized, thereby preventing a plant trip or forced outage.

Design Control Document (DCD) Revision:

None

PRA Revision:

None

AP1000 DESIGN CERTIFICATION REVIEW

Response to Request For Additional Information

RAI Number: 435.009

Question:

Discuss the design to ensure that each safety-related battery charger has sufficient capacity to meet the largest combined demands of the various steady-state loads plus the charging capacity to restore the battery charger from the design minimum charge to the fully charged state in less than 12 hours (in accordance with IEEE Std 946) regardless of the state of the plant during which these demands occur.

Westinghouse Response:

Each battery charger is capable of providing the largest combined demands of the various steady-state loads on its associated dc system while providing sufficient power to charge the battery from the design minimum charge state to 95% of fully charged condition within 24 hours. Battery charger capacity requirements are calculated using the method of IEEE 946-1992 section 6.2.

IEEE 946 recommends an 8- to 12-hour recharge time. This recommendation is based on an assumption that the batteries are designed for a 2- to 12-hour discharge cycle. The AP1000 Class 1E batteries are designed for 24- and 72-hour discharge cycles. A longer charging time up to 24 hours is considered acceptable, given the large overall battery capacity and the benefits of limiting battery charger capacity.

Design Control Document (DCD) Revision:

None

PRA Revision:

None

AP1000 DESIGN CERTIFICATION REVIEW

Response to Request For Additional Information

RAI Number: 435.010

Question:

Inverter and charger failures have been reported to be age-related. Capacitors, transformers, and semiconductors are affected by increase in ambient temperature. Discuss the conservatism used in the AP1000 design as it relates to these components.

Westinghouse Response:

The Class 1E and non-Class 1E inverters and battery chargers (UPS equipment) are located in a controlled environment. The room ambient temperature is maintained between 19ºC and 23ºC for the Class 1E and between 10ºC and 40ºC for the non-Class 1E UPS equipment, respectively. The UPS equipment is rated for continuous operation at 40ºC ambient. In addition, the temperature-sensitive components such as capacitors, transformers, and semiconductors used in the UPS equipment are designed to continuously withstand a higher temperature, about 60ºC to 70ºC. In addition, Class 1E electrical components are environmentally qualified per 10 CFR 50.49. Therefore, considering the temperature margins conservatively provided in the AP1000 design, the age-related failure of the UPS equipment is not expected.

Air cooling is provided by the nuclear island nonradioactive ventilation system (VBS) for Class 1E UPS equipment located in the auxiliary building. This system is described in DCD subsection 9.4.1. The non-Class 1E UPS equipment is located in the annex building. Air cooling is provided in the annex building by the annex building nonradioactive ventilation system (VXS), which is described in DCD subsection 9.4.2.

Design Control Document (DCD) Revision:

None

PRA Revision:

None

AP1000 DESIGN CERTIFICATION REVIEW

Response to Request For Additional Information

RAI Number: 435.011

Question:

Discuss the design features or operating practices used to reduce the risk of simultaneous failures (common cause failures) affecting all of the battery divisions.

Westinghouse Response:

The AP1000 Class 1E dc and UPS system has the following provisions to reduce the risk of simultaneous failure (common-mode failures) affecting all battery divisions:

- The AP1000 Class 1E dc and UPS system consists of four completely independent divisions located in separate rooms. Their circuits are routed in dedicated, physically separate raceways. The electrical independence between the Class 1E and non-Class 1E systems and between the Class 1E divisions is maintained in accordance with Regulatory Guide 1.75 and IEEE Std 384-1981, with exceptions stated in DCD 8.3.2.4.2.

- The AP1000 design utilizes battery monitors. These monitors continuously monitor the conditions of the battery by measuring inter-cell resistance to provide advance indication of a maintenance requirement. Also, the batteries are in a controlled environment provided by the independent ventilation systems as described in DCD section 9.4. The controlled environment eliminates the possibility of a common-mode failure caused by high or low room ambient temperature.

- Industry experience does not indicate any failure mode of lead calcium batteries that could result in common-mode failures when proper maintenance and quality control are exercised.

Design Control Document (DCD) Revision:

None

PRA Revision:

None

AP1000 DESIGN CERTIFICATION REVIEW

Response to Request For Additional Information

RAI Number: 435.012

Question:

Discuss the aspects of the AP1000 design that preclude the ac power supply source (offsite) from becoming a load on the safety-grade batteries.

Westinghouse Response:

The AP1000 design for the battery chargers has a dc output blocking diode feature that prevents the Class 1E battery from discharging back through the battery charger's filter and rectifier upon loss of ac input power. This design feature precludes the ac power supply source from becoming a load on the Class 1E battery as stated in DCD subsection 8.3.2.1.1.1.

Design Control Document (DCD) Revision:

None

PRA Revision:

None

AP1000 DESIGN CERTIFICATION REVIEW

Response to Request For Additional Information

RAI Number: 435.013

Question:

Are the battery cells provided with explosion resistant vent caps that would prevent the ignition of gases within the cell from an ignition source outside the cell? Please describe.

Westinghouse Response:

The battery cells for the AP1000 are provided with flame arrester vent caps that would prevent the ignition of gases within the cell from an ignition source outside the cell. The details of the arrester design are specific to the battery manufacturer.

Design Control Document (DCD) Revision:

None

PRA Revision:

None

AP1000 DESIGN CERTIFICATION REVIEW

Response to Request For Additional Information

RAI Number: 435.014

Question:

The loads used for digital control power supplies and computers in the AP1000 design are inherently non-linear in nature. Also variable speed drives and fluorescent lighting blasts introduce harmonics into the plant distribution system. Discuss the measures taken so that the total harmonic distortion (THD) due to non-linear loads on power system will not affect the current and voltage waveform of the UPS system.

Westinghouse Response:

Total harmonic distortion (THD) due to nonlinear loads has been addressed in the AP1000 has been addressed. The UPS inverters have harmonic filters designed specifically to reduce the effects of large third, fifth, seventh, and higher-order harmonics that may result from anticipated 100 percent nonlinear loads. To provide high-quality power from the UPS system, the inverters are specified to power loads with a crest factor of 2 or higher (ratio of peak to rms value).

The variable speed drives used for the reactor coolant pumps have special filters to eliminate the introduction of harmonics into the distribution system. Also, the battery chargers are furnished with output filtering to limit ripple currents feeding into the dc power supply for the inverters.

Design Control Document (DCD) Revision:

None

PRA Revision:

None

AP1000 DESIGN CERTIFICATION REVIEW

Response to Request For Additional Information

RAI Number: 435.015

Question:

Discuss the protection provided in the AP1000 design to suppress voltage spikes that may result from surges caused by de-energizing highly inductive loads.

Westinghouse Response:

The dc system is protected from surges generated on the ac system by the isolation provided by the battery chargers and voltage regulating transformers. To further assure protection, metal-oxide varistor (MOV) surge suppressors are used at the input terminals to all battery chargers and inverters to minimize the potential for component damage resulting from electrical transients. The MOV-type surge suppressor is safe to use. It does not emit toxic fumes upon failure and arcing or burning.

On the dc system, inductive loads are limited to relay and motor starter coils. Surge suppression devices are installed across the coils to limit voltage spikes when the coils de-energize.

In the ac system surge arresters are used in locations where switching or lightning transients may occur. In addition, surge suppressors are provided to protect the plant instrumentation and monitoring system from lightning-induced surges in the signal and power cables connected to devices located outside.

Design Control Document (DCD) Revision:

None

PRA Revision:

None

AP1000 DESIGN CERTIFICATION REVIEW

Response to Request For Additional Information

RAI Number: 440.011

Question:

Provide technical justifications demonstrating that the NRC approved neutronics and thermal-hydraulics computer codes such as TWINKLE and ANC, are valid for application in analyzing the AP1000.

Westinghouse Response:

TWINKLE is a multi-dimensional spatial neutronics code, which uses an implicit finite-difference method to solve the two-group transient neutronic equations in one, two, and three dimensions. TWINKLE has been used in the one-dimensional (axial) mode to calculate the kinetic response of the reactor for rapid transients, such as the RCCA bank withdrawal from subcritical conditions and RCCA ejection events. The code is applied to an individual plant by adjusting the kinetic coefficients (moderator temperature coefficient, Doppler power defect, trip reactivity, and delayed neutron fraction) to match the bounding safety-analysis values specified for the plant. The TWINKLE code is documented in WCAP-7979-P-A and had been approved by the NRC for operating Westinghouse plants, and was approved for the AP600 as part of AP600 Design Certification (See section 15.1.4 of NUREG-1512, FSER for AP600). Since the AP1000 fuel design is similar to that of operating Westinghouse plants, i.e., falls within the NRC-approved applicable range of the code, the application of the TWINKLE code to the AP1000 for analysis of kinetic responses is acceptable.

The fuel computer codes such as ANC are discussed in DCD Section 4.3. The ANC code was approved by the NRC and is Reference 57 in DCD section 4.3.5.

From DCD Section 4.3.5:

57. Davidson, S. L., (Ed.), et. al., "ANC: Westinghouse Advanced Nodal Computer Code," WCAP-10965-P-A, (Proprietary) September 1986.

Design Control Document (DCD) Revision:

None

PRA Revision:

None

AP1000 DESIGN CERTIFICATION REVIEW

Response to Request For Additional Information

RAI Number: 440.012

Question:

Tier 2 Information Section 4.1 states that "other types of fuel may be used ...." The staff assume that these "other types" of fuel will be NRC-approved fuel types.

Is this a correct assumption?

Westinghouse Response:

DCD section 4.1 is referring to "other types of fuel rods" which may be used within some fuel assemblies. One type being an integral fuel burnable absorber (IFBA) containing a thin boride coating on the surface of the fuel pellets. Another type being fuel pellets containing gadolinium oxide mixed with uranium oxide. These fuel rod types, planned for use in the AP1000, are currently being used in operating reactor applications and have been NRC-approved.

Design Control Document (DCD) Revision:

None

PRA Revision:

None

AP1000 DESIGN CERTIFICATION REVIEW

Response to Request For Additional Information

RAI Number: 440.013

Question:

Section 4.3.1.7, on anticipated transient without scram (ATWS), makes reference to topical report WCAP-11992, "Joint Westinghouse Owners Group/Westinghouse Program: ATWS Rule Administrative Process," dated December 1988, which was rejected by the NRC staff (letter from NRC to Vanderburg, Chairman, Westinghouse Owners Group, "Review of WCAP-11922," dated July 1, 1997).

Since this topical report is not acceptable for referencing in licensing applications, it should be removed from this submittal.

Westinghouse Response:

Reference to WCAP-11992 will be removed, as indicated below, in the next revision of the DCD.

Design Control Document (DCD) Revision:

From DCD chapter 4.3, page 4.3-6:

4.3.1.7 Anticipated Transients Without Scram (ATWS)

The AP1000 diverse reactor trip actuation system is independent of the reactor trip breakers used by the protection monitoring system. The diverse reactor trip reduces the probability and consequences of a postulated ATWS. The effects of anticipated transients with failure to trip are not considered in the design bases of the plant. Analysis has shown that the likelihood of such a hypothetical event is negligibly small. Furthermore, analysis of the consequences of a hypothetical failure to trip following anticipated transients has shown that no significant core damage would result, system peak pressures should be limited to acceptable values, and no failure of the reactor coolant system would result. (See WCAP-8330, Reference 5). The process used to evaluate the ATWS risk in compliance with 10 CFR 50.62 is described in ~~WCAP-11992 (Reference 6) and in~~ Section 15.8 of this DCD.

From DCD chapter 4.3, page 4.3-40:

6. **Deleted.** ~~Loftus, P. A., et al., "Joint Westinghouse Owners Group/Westinghouse Program: ATWS Rule Administration Process," WCAP-11992, December 1988.~~

AP1000 DESIGN CERTIFICATION REVIEW

Response to Request For Additional Information

From DCD chapter 1.6, page 1.6.7, Table 1.6-1 (Sheet 6 of 20):

WCAP-8330	Westinghouse Anticipated Transients Without Reactor Trip Analysis, August 1974
~~WCAP-11992~~	~~Joint Westinghouse Owners Group/Westinghouse Program: ATWS Rule Administration Process, December 1988~~
WCAP-7308-L-P-A (P) WCAP-7308-L-A	Evaluation of Nuclear Hot Channel Factor Uncertainties, June 1988

PRA Revision:

None

AP1000 DESIGN CERTIFICATION REVIEW

Response to Request For Additional Information

RAI Number: 440.014

Question:

Provide quantitative technical analysis to support that the AP1000 can meet the present ATWS Rule that requires an ATWS mitigation system actuation circuitry (AMSAC), which automatically initiate the auxiliary feedwater system and initiate a turbine trip under conditions indicative of an ATWS, and meet the basis of the rule, i.e., the reactor vessel pressure will exceed 3200 pounds-per-square inch (absolute) (psia) for no more than five percent of the cycle time. The analysis should be performed for all applicable non-loss-of-coolant accident (LOCA) transients in order to identify the limiting ATWS case. Discuss the methods used and verify that the methods are acceptable. Also, justify that the assumptions for the applicable ATWS analyses are adequate as they relate to input parameters such as the initial power level, moderator temperature coefficient (MTC), pressurizer safety and relief valves capacity, reactor coolant system (RCS) volume, steam generator pressure, passive residual heat removal system (PRHR) heat transfer capacity and its actuation delay time, and the AMSAC setpont to trip the turbine and initiate the PRHR. Also include a discussion and applicable values of the unfavorable exposure time for the MTC (in accordance with the NUREG-0460 guidance for the newer plant design) assumed in the analyses.

Westinghouse Response:

As discussed in section 15.8 of the DCD, for Westinghouse plants, the ATWS rule (10 CFR 50.62) requires the installation of ATWS mitigation systems actuation circuitry (AMSAC), which consists of circuitry separate from the reactor protection system, to trip the turbine and initiate decay heat removal.

The basis for the ATWS rule requirements, as outlined in SECY-83-293 (Reference 1), is to reduce the risk of core damage because of ATWS to less than 10^{-5} per reactor year. The AP1000 includes a diverse actuation system, which provides the AMSAC protection features mandated for Westinghouse plants by 10 CFR 50.62, plus a diverse reactor scram (see section 7.7 of the DCD). Thus, the AP1000 meets the ATWS rule.

Similar to the AP600, the AP1000 relies on the PRHR in lieu of an auxiliary or emergency feedwater system as its safety-related method of removing decay heat. Westinghouse has requested exemption from the part of the ATWS regulation, 10 CFR 50.62(c)(1), that requires auxiliary or emergency feedwater as an alternate system for decay heat removal during an ATWS event. The staff concluded for AP600 that Westinghouse had met the intent of the ATWS rule by relying on the PRHR system to remove the decay heat, and meets the underlying purpose of the rule. This exemption was reviewed by the NRC during the pre-certification

review, and found to be applicable to the AP1000. By separate letter, Westinghouse has requested this exemption for the AP1000.

In the course of the AP600 review, the staff asked Westinghouse to submit an analysis demonstrating that the AP600 ATWS response is within the bounds considered by the staff during its deliberations leading to the ATWS rule. For Westinghouse plants, the complete loss of normal feedwater (LONF) event is the limiting event for the ATWS analysis because it produces the maximum RCS pressure. During the AP600 Design Certification review, Westinghouse was required to demonstrate that the LONF was still the limiting event, considering the differences resulting from using the PRHR heat exchanger as the safety-related decay heat removal system.

In addition, as required by the staff, Westinghouse showed that the unfavorable exposure time (UET), given the cycle design (including the moderator temperature coefficient [MTC]), is less than 5 percent, or equivalently, that the ATWS pressure limit is met for at least 95 percent of the cycle. The UET is the time during the cycle when reactivity feedback is not sufficient to maintain pressure under 3200 psig for a given reactor state.

In Westinghouse letter DCP/NRC 1240, dated January 30, 1998, Westinghouse provided the staff a complete set of analyses to demonstrate the limiting ATWS scenario for the AP600 passive plant. The results of the analyses presented in this report demonstrated that, as was the case for the current Westinghouse PWRs, the LONF event was also the limiting ATWS scenario for the passive AP600. Based on the similarities of the design of the AP600 and AP1000, including their reliance on passive safety features such as the PRHR heat exchanger to mitigate the consequences of the ATWS, Westinghouse performed an ATWS analysis of the LONF event for the AP1000 Probabilistic Risk Assessment. The analysis presented in Appendix A of the PRA demonstrates that the peak AP1000 RCS pressure is less than 3200 psig with a UET of 0. This is a result of the operation of the passive safety systems, as well as the lower MTC associated with the lower core boron concentration of the AP1000. PRA Appendix A provides a discussion of the AP1000 ATWS analysis assumptions.

Design Control Document (DCD) Revision:

None

PRA Revision:

None

AP1000 DESIGN CERTIFICATION REVIEW

Response to Request For Additional Information

RAI Number: 440.016

Question:

In Section 4.3.2.2.4, the 5th sentence in the 2nd paragraph "The calibrated difference in power ...." is not a complete sentence. Please clarify.

Westinghouse Response:

The sentence will be modified, as indicated below, in the next revision of the DCD.

Design Control Document (DCD) Revision:

From DCD section 4.3.2.2.4, page 4.3-11:

The calibrated difference in power between the core top and bottom halves, **called the flux difference,** (ΔI), is derived for each of **the** four channels of ex-core detectors **and** is displayed on the control panel ~~and is called the flux difference, (ΔI)~~.

PRA Revision:

None

AP1000 DESIGN CERTIFICATION REVIEW

Response to Request For Additional Information

RAI Number: 440.017

Question:

Section 4.3.2.2.6 makes reference to topical reports WCAP-7811, "Power Distribution Control of Westinghouse Pressurized Water Reactors," WCAP-8385, "Power Distribution Control and Load Following," and WCAP-10216-P-A, "Relaxation of Constant Axial Offset Control, F_Q Surveillance Technical Specification."

A. Both WCAP-7811 and WCAP-8385, which are used for determining power peaking factors, radial and axial distributions etc., are not approved by NRC. Please provide technical justification for the use of these topical reports in analyzing the AP1000 reactor.

B. WCAP-10216-P-A was developed specifically for use in 12-foot cores only. Please provide technical justification to support the use of this topical report in the AP1000 14-foot core design.

Westinghouse Response:

A topical report on the power distribution control was issued in 1968 as WCAP-7811 (Proprietary 3) and WCAP-7208 (Proprietary 2), for the purpose of providing the licensing basis for the Westinghouse PWR plant operation. Subsequently, a major technological development was achieved in this area and WCAP-8385 was issued in 1976. WCAP-8385 was reviewed and accepted by the NRC. The acceptance letter was issued on January 21, 1978 from Mr. John F. Stolz, Chief of Light Water Reactors, Branch No.1, Division of Project Management, United States Nuclear Regulatory Commission addressed to Mr. C. Eicheldinger, Westinghouse Electric Corporation. This documentation has been used for many Westinghouse PWR plants licensing basis since then. In 1982, WCAP-10216 was issued to reinforce the Westinghouse power distribution control technology. WCAP-10216 was approved in November 1993. WCAP-8385 and WCAP-10216-P-A provide the basis of reactor control technology for the majority of Westinghouse PWR plants including AP1000.

Demonstration of the theory developed in WCAP-8385 and WCAP-10216-P-A was made for typical Westinghouse's latest plants at that time, which were mostly 12-foot long cores. However, the theory is not core height dependent. Validity of the conclusion of these reports is judged to be applicable for 14-foot cores as well.

In 1988, the South Texas Project Unit 1 and Unit 2 plants started commercial operation. These are standard Westinghouse PWR plants with 14-foot cores. These plants were licensed based on WCAP-8385 technology.[1] These plants have been operating successfully up to present day. The South Texas plants use the BEACON system for on-line power distribution

measurements. The power distribution behavior has been confirmed to be quite consistent as expected, as proven by more than ten years of plant operation.

Other Westinghouse 14-foot PWR plant operating experience includes the Tihange Unit 3 and Doel Unit 4 plants, which have been operating successfully in Belgium since 1985.

Notes:

(1) Reference: Section 4.3-9 of the South Texas Project Electric Generating Station Unit 1 & 2 Updated Final Safety Analysis Report (UFSAR).

Design Control Document (DCD) Revision:

None

PRA Revision:

None

AP1000 DESIGN CERTIFICATION REVIEW

Response to Request For Additional Information

RAI Number: 440.018

Question:

Section 4.3.2.2.6 states that allowing for fuel densification effects, the average linear power at 3400 megawatts (MW) is 5.72 kilowatts-per-foot (kW/ft), and that from Figure 4.3-14, the conservative upper bound value of normalized local power density, including uncertainty allowances, is 2.60 corresponding to a peak linear heat rate of 15.0 kW/ft at each core elevation at 101 percent power. Since the AP1000 14-foot core design has a total of 41,448 fuel rods, which is equivalent to an average linear power of 5.86 kW/ft without fuel densification effects, it is not clear to the staff how the numbers stated in Section 4.3.2.2.6 are derived.

Provide additional supporting information to clarify the above statement.

Westinghouse Response:

3400 MWt * 1000 kW/MW * 0.974 (fraction of heat generated in the fuel rod) /
(41,448 rods * 14 ft * (1/1.002) (densification effect)) = 5.72 kW/ft

5.72 * 2.60 * 1.01 = 15.0 kW/ft

Design Control Document (DCD) Revision:

None

PRA Revision:

None

AP1000 DESIGN CERTIFICATION REVIEW

Response to Request For Additional Information

RAI Number: 440.019

Question:

Section 4.3.2.2.6 indicates that the uncertainty factors for the hot channel heat flux factor, F_Q, to be 1.03, 1.05, and 1.056, for the engineering uncertainty, method uncertainty, and rod bow effects, respectively.

Provide a derivation on the determination of these uncertainty factors values.

Westinghouse Response:

A correction is needed in the last sentence of the last paragraph of Section 4.3.2.2.6 as follows:

> The value for the rod bow factor, F^B_Q, is 1.056, which accounts for the maximum ~~DNB~~ F_Q penalty as a function of burnup due to rod bow effects.

When the F_Q uncertainty was defined in the past, it consisted of a portion related to the nuclear calculation accuracy and another portion related to the fuel pellet/rod manufacturing uncertainty. These are called calculational and engineering uncertainties denoted by U_n and U_e.

An intensive study was made to define the U_n by comparing a large number of the critical experiments and operating plant data with prediction calculations. The results are documented in WCAP-7308-L-P-A (Reference 7 of DCD Section 4.3-5). The U_n was conservatively defined to be 1.05.

U_e is the allowance on the power peaking factor required for manufacturing tolerances. The engineering factor allows for local variations in enrichment, pellet density and eccentricity of the gap between pellet and clad. Combined statistically, the net effect is a factor of 1.03. The fuel manufacturing specification is determined consistently.

Westinghouse had defined the total F_Q uncertainty factor as a product of U_n and U_e, i.e., 1.0815 (1.05 x 1.03). This is a very conservative value because U_n and U_e are considered to be independent statistically.

In 1973, the fuel rod bow issue was raised. An intensive study was made and the results are documented in WCAP-8691, Revision 1, "Fuel Rod Bow Evaluation, July 1979 (Reference 19 of DCD Section 4.4.8). The conclusion of the report (accepted by NRC) is as follows:

As long as the F_Q uncertainty, due to the rod bow, U_b, is less than 1.057, the statistically combined total uncertainty is less than 1.0815. This means the current Westinghouse total F_Q

definition can cover the rod bow effect without introducing an additional penalty factor. The topical report concluded that the maximum U_b is less than 5.7%.

Design Control Document (DCD) Revision:

From DCD Section 4.3.2.2.6, page 4.3-16:

The independence of the various individual uncertainties constituting the uncertainty factor on F_Q enables the uncertainty (F^U_Q) to be calculated by statistically combining the individual uncertainties on the limiting rod. The standard deviation of the resultant distribution of F^U_Q is determined by taking the square root of the sum of the variances of each of the contributing distributions WCAP-7308-L-P-A (Reference 7). The values for F^E_Q and F^N_U are 1.03 and 1.05, respectively. The value for the rod bow factor, F^B_Q, is 1.056, which accounts for the maximum ~~DNB~~ F_Q penalty as a function of burnup due to rod bow effects.

PRA Revision:

None

Response to Request For Additional Information

RAI Number: 440.023

Question:

In Tier 2 Information, Section 4.1 states that (1) the AP1000 fuel assemblies are the same as the 17x17 XL Robust fuel assemblies except that they have four intermediate flow mixing grids in the top mixing vane grid span, (2) the XL Robust fuel assembly evolved from VANTAGE 5 HYBRID design, and (3) the AP1000 fuel assembly design also includes a protective grid for enhanced debris resistance.

Since the WRB-2M critical heat flux correlation is developed from test assemblies designed to simulate modified VANTAGE 5 H fuel with or without modified flow mixer grids, provide justification why these test data and the WRB-2M correlation are applicable to the AP1000 fuel design. The justification should discuss the effects on the critical heat flux of (1) differences in the modified intermediate flow mixer grids in the test assemblies and the intermediate flow mixer grids in the AP1000 fuel design, and (2) any other differences of the test assemblies from the AP1000 fuel design, such as the protective grid.

Westinghouse Response:

As described in WCAP-15025-P-A, the WRB-2M Critical Heat Flux (CHF) correlation is based on test data from rod bundles containing the Modified VANTAGE 5H (V5H) Low Pressure Drop (LPD) Mixing Vane (MV) grids and the Modified Intermediate Flow Mixer (IFM) grids. The WRB-2M correlation is applicable to the AP1000 fuel design because the AP1000 fuel assemblies use the same Modified V5H Mixing Vane Grid design and the same IFM grid design that were tested to develop the WRB-2M correlation. The protective grid, located below the heated length, has no adverse impact on fuel CHF performance.

Design Control Document (DCD) Revision:

None

PRA Revision:

None

AP1000 DESIGN CERTIFICATION REVIEW

Response to Request For Additional Information

RAI Number: 440.024

Question:

Section 4.4.2.2.1 shows the applicable ranges of various parameters of the WRB-2M and WRB-2 correlations, respectively, including the local mass velocity applicability range from 0.97 to 3.1M-lb/ft^2-hr for WRB-2M, and between 0.9 and 3.7M-lb/ft^2-hr for WRB-2.

A. Are there checks in the VIPRE-W code to verify that these correlations are not used outside their applicability ranges? If not, how is it ensured that the correlations are applied within their applicability range?

B. Will the local mass velocity for all design-basis transients ever fall below the lower bound applicability ranges of these correlations? If so, which critical heat flux correlation will be used for the low flow conditions, and what is the basis for its applicability to the AP1000 fuel design?

Westinghouse Response:

A. The VIPRE output lists the DNBRs for all axial steps and the associated local thermal/hydraulic conditions. The local conditions at the location of minimum DNBR are checked to determine whether the conditions are within the range of applicability of the correlation.

B. The local mass velocity does not fall below the lower limit of applicability for any of the AP1000 design-basis transients.

Design Control Document (DCD) Revision:

None

PRA Revision:

None

AP1000 DESIGN CERTIFICATION REVIEW

Response to Request For Additional Information

RAI Number: 440.027

Question:

Section 4.4.4.3.2 states that the minimum DNBR is calculated for the design power shape for non-overpower/overtemperature DNB events, and this design shape results in calculated DNBR that bounds the normal operation shapes.

Explain the design power shape for non-overpower/overtemperature events and how this shape bound the normal operation shapes for the DNBR calculations.

Westinghouse Response:

The design axial power shape for non-over-power / over-temperature events is shown in Figure 1.3-13 of WCAP-9500-P-A (Proprietary) and WCAP-9500-A (Nonproprietary), May 1982, "Reference Core Report 17x17 Optimized Fuel Assembly," Davidson, S. L. and Iorii, J. A. (Reference 15 of DCD Section 4.2.6). In accordance with the current reload design methodology, the design power shape is verified with the plant / cycle-specific power shape in each reload design. The design axial power shape has been verified to be acceptable with the axial shapes generated from the reference AP1000 Cycle 1 core design.

Design Control Document (DCD) Revision:

None

PRA Revision:

None

Response to Request For Additional Information

RAI Number: 440.028

Question:

Section 4.4.4.5.2 states that the effect of crud on the flow and enthalpy distribution in the core is not directly accounted for in the VIPRE-W evaluations; however, conservative treatment by the VIPRE-W modeling method has been demonstrated to bound this effect in DNBR calculations [WCAP-14565-P-A].

Provide analysis or data that demonstrates the VIPRE-W modeling method bound the effect of crud on the flow and enthalpy distribution.

Westinghouse Response:

Section 4.1 of WCAP-14565-P-A describes VIPRE-01 (VIPRE) comparisons with the THINC-IV code. The THINC-IV calculations assumed 1-mil of crud thickness on fuel rod surface. The comparisons show that the VIPRE solutions are in good agreement with the THINC-IV results. It is also show that the VIPRE two-phase flow correlations produce conservatively high void predictions and bound the effect of crud on DNBR.

Design Control Document (DCD) Revision:

None

PRA Revision:

None

AP1000 DESIGN CERTIFICATION REVIEW

Response to Request For Additional Information

RAI Number: 440.029

Question:

Section 4.4.1.2.1 states that the NRC has approved the fuel design evaluations up to 60,000 megawatt-days-per-megatons uranium (MWD/MTU) in Reference 81 [WCAP-12610-P-A, "VANTAGE+ Fuel Assembly Reference Core Report"] and up to 62,000 MWD/MTU in Reference 9 [WCAP-12488-A, "Westinghouse Fuel Criteria Evaluation Process"]. There is a footnote under Reference 9 that states "NRC Staff Approval is required prior to implementing a change in this information; see DCD Introduction Section 3.5."

Explain the footnote under Reference 9.

Westinghouse Response:

Explanation of the footnote is provided in DCD Tier 1 Section 3.5 "Plant-Specific Changes to Designated Information in the Tier 2 Information", as follows:

> Tier 2* means the portion of the Tier 2 information, designated as such in the AP1000 design control document, which is subject to the change process in Section VIII of the AP1000 design certification rule. This designation expires for some Tier 2* information under Section VIII of the AP1000 design certification rule.
>
> An applicant who references the AP1000 design certification rule may not depart from Tier 2* information, which is designated with italicized text or brackets and an asterisk in the AP1000 design control document, without NRC approval. The departure will not be considered a resolved issue, within the meaning of Section VI of the AP1000 design certification rule and 10 CFR 52.63(a)(4).
>
> The AP1000 Tier 2* information, summarized in Table 1-1 of this introduction, is designated with italicized text in the Tier 2 Information. Certain figures that are indicated to be Tier 2* may contain information beyond that considered to be Tier 2*. A review of the text referencing the figure may be necessary to determine what information on the figure is considered to be Tier 2*. The AP1000 Tier 2* information for which the Tier 2* designation expires when the COL holder first achieves 100% power operation is indicated in Table 1-1 of this introduction.

Design Control Document (DCD) Revision:

None

PRA Revision:

None

AP1000 DESIGN CERTIFICATION REVIEW

Response to Request For Additional Information

RAI Number: 440.030

Question:

Section 4.4.1.2.2 states that for higher burnups, the peak kilowatt-per-foot (kw/ft) experienced during Condition I and III events is limited to that maximum value which is sufficient to provide that the fuel center-line temperatures remain below the melting temperature of the fuel rods.

Explain why the statement is limited to only Condition I and III events.

Westinghouse Response:

This is a typographical error in Section 4.4.1.2.2. The statement is limited to only Condition I and II events. The sentence should read as follows:

> For higher burnups, the peak kilowatt-per-foot experienced during Condition I and ~~III~~ II events is limited to that maximum value which is sufficient to provide that the fuel center-line temperatures remain below the melting temperature for the fuel rods.

This is consistent with required reactor performance and safety criteria as defined in DCD Section 4.2 which states the following regarding fuel damage.

- The mechanical design and physical arrangement of the reactor core components, together with corrective actions of the reactor control, protection, and emergency cooling systems (when applicable) provide that:
  - Fuel damage, that is, breach of fuel rod clad pressure boundary, is not expected during Condition I and Condition II events. A very small amount of fuel damage may occur. This is within the capability of the plant cleanup system and is consistent with the plant design bases.
  - The reactor can be brought to a safe state following a Condition III event with only a small fraction of fuel rods damaged. The fraction of fuel rods damaged must be limited to meet the dose guidelines of 10 CFR 100 although sufficient fuel damage might occur to preclude immediate resumption of operation.
  - The reactor can be brought to a safe state and the core kept subcritical with acceptable heat transfer geometry following transients arising from Condition IV events.

AP1000 DESIGN CERTIFICATION REVIEW

Response to Request For Additional Information

Design Control Document (DCD) Revision:

From DCD section 4.4.1.2.2, page 4.4-3:

The center-line temperature limit has been applied to reload cores with a lead rod average burnup of up to 60,000 MWD/MTU. For higher burnups, the peak kilowatt-per-foot experienced during Condition I and ~~III~~ II events is limited to that maximum value which is sufficient to provide that the fuel center-line temperatures remain below the melting temperature for the fuel rods. Thus, the fuel rod design basis that fuel rod damage not occur due to fuel melting continues to be met.

PRA Revision:

None

AP1000 DESIGN CERTIFICATION REVIEW

Response to Request For Additional Information

RAI Number: 440.031

Question:

Section 4.4.1.3 states that core cooling evaluations are based on the thermal flow rate entering the reactor vessel, and that a typical maximum value of 5.9 percent is allotted as bypass flow. Section 4.4.1.3.2 states that the maximum bypass flow fraction of 5.9 percent assumes the use of thimble plugging devices in the rod cluster control guide tubes that do not contain any other core components. Table 5.1-3 lists five components which constitute the 5.9 percent core bypass flow.

Describe how these flow fractions for the 5 components are determined.

Westinghouse Response:

Core bypass flow is defined as the total amount of reactor coolant flow which bypasses the core region and is not considered effective in the core heat transfer process. The current design core bypass flow limit for the AP1000 design is 5.9% of total reactor vessel flow. The core bypass flow paths in the AP1000 design are:

1. Core Shroud Region

   The core shroud region consists of vertical baffle plates that follow the periphery of the core. For the AP1000 design the core shroud region is orificed near the core inlet. In this upflow design, all the flow that passes through the core shroud region is considered core bypass flow.

2. Head Cooling Spray Nozzles

   These nozzles are flow paths between the reactor vessel and core barrel annulus and the fluid volume in the vessel closure head region above the upper support plate. A fraction of the flow that enters the vessel inlet nozzles and into the vessel/barrel downcomer passes through these head cooling nozzles and into the vessel closure head region. This flow path allows the circulation of a small fraction of the cold leg coolant into the upper head region of the reactor vessel to adjust or control the bulk reactor vessel upper head temperature.

3. Outlet Nozzles

Some of the flow that enters the vessel/barrel downcomer will leak through the gaps between the core barrel outlet nozzles and the reactor vessel outlet nozzles and merge with the vessel outlet nozzle flow. Since the lower reactor internals are designed to be removable from the reactor vessel, a small circumferential gap exists at each of the outlet nozzle locations. While the gap is designed to be very small and closes down somewhat at operating conditions, there is some amount of flow which leaks directly from the vessel inlet/downcomer region and out these nozzle gaps.

4. Baffle Plate-Core Cavity Gap

The baffle plates surround the reactor fuel assemblies or core region. The gap between the peripheral fuel assemblies and the baffle plates is referred to as the core cavity region. Vertical flow between the peripheral fuel assemblies and the inside surface of the core baffle plates constitutes this core bypass flow path.

5. Fuel Assembly Thimble Tubes

Thimble tubes are used as paths for the insertion and removal of control rods, thimble plugging devices and various core components such as burnable absorbers. These tubes are physically part of each fuel assembly and flow within them is partially effective in removing core heat. However, such flow is analytically not considered to be effective in heat removal, and is consequentially core bypass flow.

The flow fractions for the above five bypass flow paths were calculated for the AP1000 utilizing an integrated computer code that models Westinghouse reactor vessel and internals. In addition to core bypass flows, the code calculates reactor vessel pressure losses, baffle-barrel flows and velocities, and hydraulic lift forces. This code has been utilized extensively in reactor vessel hydraulic calculations for Westinghouse operating plants. For each reactor vessel calculation, plant specific parameters are input to the code. These parameters include reactor vessel, reactor internal component, and fuel assembly hydraulic characteristics, along with plant operating data (e.g. inlet temperature, reactor coolant pressure and flow). Calculation of core bypass flows for the AP1000 has therefore been performed according to the standard design practice for reactor vessel hydraulic evaluations that has been utilized in the design of Westinghouse operating plants.

Although flows are calculated for each of the core bypass flow paths, the AP1000 design requirement is to ensure that the total core bypass flow is maintained at 5.9% or less of the total vessel flow.

AP1000 DESIGN CERTIFICATION REVIEW

Response to Request For Additional Information

Design Control Document (DCD) Revision:

None

PRA Revision:

None

AP1000 DESIGN CERTIFICATION REVIEW

Response to Request For Additional Information

RAI Number: 440.032

Question:

Section 4.4.2.9.2 states that core and vessel pressure drops based on the best-estimate flow are quoted in Table 4.4-1, and that the uncertainties quoted are based on the uncertainties in both the test results and the analytical extension of these values to the reactor application. Table 4.4-1 lists the core and vessel pressure drops uncertainty values for AP600 and Typical XL plant, but not for AP1000.

Explain why the pressure drop uncertainties are not included for AP1000, or provide an update of Table 4.4-1 to include the uncertainties for the AP1000 core and vessel pressure drops, similar to those shown for the AP600 and Typical XL Plant.

Westinghouse Response:

Table 4.4-1 in Revision 1 of the AP1000 DCD includes the AP1000 core and vessel pressure drop uncertainty values. The following is taken from the Revision 1 of the AP1000 DCD, Table 4.4-1 (Sheet 2 of 2) , page 4.4-40:

Design Parameters	AP1000[a]	AP600	Typical XL Plant
Pressure drop[k]			
Across core (psi)	39.9 ± 4.0[l]	17.5 ± 1.7	38.8 ± 3.9
Across vessel, including nozzle (psi)	62.3 ± 6.2[l]	45.3 ± 4.5	59.7 ± 6.0

Design Control Document (DCD) Revision:

None

PRA Revision:

None

AP1000 DESIGN CERTIFICATION REVIEW

Response to Request For Additional Information

RAI Number: 440.033

Question:

Section 4.4.3.1 states that total RCS volume including pressurizer and surge line and reactor coolant system liquid volume, including pressurizer water at steady state power conditions, are given in Table 5.1-2; and that the steady-state pressure drops and temperature distributions throughout the RCS are presented in Table 5.1-3. However, most of these information are not included in these tables.

Provide an update of Tables 5.1-2 and 5.1-3 to include these data.

Westinghouse Response:

The total RCS liquid volume (including 1000 ft^3 of pressurizer liquid) at steady state power conditions is 9600 ft^3. These parameters will be added to Table 5.1-2 in the DCD.

The steady state pressure drops and temperature distributions throughout the RCS are presented in Table 5.1-1 rather than 5.1-3. The table number referred to in section 4.4.3.1 will be changed in the DCD.

Design Control Document (DCD) Revision:

From DCD page 5.1-10:

Table 5.1-2

NOMINAL SYSTEM DESIGN AND OPERATING PARAMETERS

General	
Plant design life, years	60
NSSS power, MWt	3415
Reactor coolant pressure, psia	2250
Reactor coolant liquid volume at power conditions (including 1000 ft^3 pressurizer liquid), ft^3	**9600**
Loops	
Number of cold legs	4
Number of hot legs	2
Hot leg ID, in.	31
Cold leg ID, in.	22

Reactor Coolant Pumps

Type of reactor coolant pumps	Canned-motor
Number of reactor coolant pumps	4
Nameplate motor rating, hp	7000
Effective pump power to coolant, MWt	15

Pressurizer

Number of units	1
Total volume, ft^3	2100
Water volume, ft^3	1000
Spray capacity, gpm	500
Inside diameter, in.	90
Height, in.	607

Steam Generator

Steam generator power, MWt/unit	1707.5
Type	Vertical U-tube
	Feedring-type
Number of units	2
Surface area, ft^2/unit	123,540
Shell design pressure, psia	1200
Zero load temperature, °F	557
Feedwater temperature, °F	440
Exit steam pressure, psia	836
Steam flow, lb/hr per steam generator	7.49×10^6
Total steam flow, lb/hr	14.97×10^6

From DCD page 4.4-20:

- The steady-state pressure drops and temperature distributions through the reactor coolant system are presented in Table 5.1-31.

PRA Revision:

None

AP1000 DESIGN CERTIFICATION REVIEW

Response to Request For Additional Information

RAI Number: 440.034

Question:

Section 4.4.3.6 states that the thermal and hydraulic characteristics are given in Tables 4.1-1, 4.4-1, and 4.4-2. As shown in Table 5.1-3, certain thermal design parameters, such as the reactor coolant flow rate and temperatures, are affected by the amount of plugging of the steam generator tubes.

Update Tables 4.1-1 and 4.4.1 to clarify the percent of tube plugging for which the thermal and hydraulic design parameters are referring to.

Westinghouse Response:

The input to the thermal / hydraulic safety analyses is based on 10% steam generator tube plugging conditions.

In the next revision of the DCD, Tables 4.1-1 and 4.4-2 will be revised, as indicated below, to add footnotes to the appropriate parameters affected by SG tube plugging (e.g., coolant flow, coolant temperature).

Design Control Document (DCD) Revision:

From DCD Section 4.1, Table 4.1-1:

Coolant Flow[c]			
Total vessel thermal design flow rate (10^6 lbm/hr)	113.5	72.9	145.0
Effective flow rate for heat transfer (10^6 lbm/hr)	106.8	66.3	132.7
Effective flow area for heat transfer (ft^2)	41.5	38.5	51.1
Average velocity along fuel rods (ft/s)	15.9	10.6	16.6
Average mass velocity, (10^6 lbm/hr-ft^2)	2.41	1.72	2.60
Coolant Temperature[e] [c]			
Nominal inlet (°F)	535.0	532.8	561.2
Average rise in vessel (°F)	77.2	69.6	63.6
Average rise in core (°F)	81.4	75.8	68.7
Average in core (°F)	578.1	572.6	597.8
Average in vessel (°F)	573.6	567.6	593.0

a. WRB-2M will be used in future reloads

b. See subsection 4.4.2.2.1 for the use of the W-3, WRB-2 and WRB-2M correlations
c. Flow rates and temperatures are based on 10 percent steam generator tube plugging for the AP600 and AP1000 designs

From DCD Section 4.4, Table 4.4-1:

Coolant conditions[d]			
Vessel minimum measured flow rate (MMF)			
10^6 lbm/hr	115.55	74.4	148.9
gpm	301,670	193,200	403,000
Vessel thermal design flow rate (TDF)			
10^6 lbm/hr	113.5	72.9	145.0
gpm	296,000	189,600	392,000
Effective flow rate for heat transfer[e]			
10^6 lbm/hr	106.8	66.3	132.7
gpm	278,500	172,500	358,700
Effective flow area for heat transfer (ft^2)	41.5	38.5	51.1
Average velocity along fuel rods (ft/s)[e]	15.9	10.6	16.6
Average mass velocity, 10^6 lbm/hr-ft^2[e]	2.41	1.72	2.60
Coolant Temperature[e] [d]			
Nominal inlet (°F)	535.0	532.8	561.2
Average rise in vessel (°F)	77.2	69.6	63.6
Average rise in core (°F)	81.4	75.8	68.7
Average in core (°F)	578.1	572.6	597.8
Average in vessel (°F)	573.6	567.6	593.0

Note:
(a) Robust Fuel Assembly
(b) 1.25 applies to Core and Axial Offset limits; 1.22 and 1.21 apply to all other RTDP transients
(c) WRB-2M is used for AP1000. WRB-2 or W-3 is used for AP1000 where WRB-2M is not applicable. See subsection 4.4.2.2.1 for use of W-3, WRB-2 and WRB-2M correlations
(d) Based on vessel average temperature equal to 573.6°F. Flow rates and temperatures based on 10 percent steam generator tube plugging

PRA Revision:

None

AP1000 DESIGN CERTIFICATION REVIEW

Response to Request For Additional Information

RAI Number: 440.037

Question:

In Tier 2 Information, Section 5.3.2.6.1.2 discusses the least squares adjustment procedure proposed to be applied in the dosimetry evaluation. The estimate of the uncertainties associated with the dosimeter activation measurement involves use of variances and covariances. If a code which has not been approved by the staff is used, then the values of the variances and covariances should be listed and their applicability to AP1000 justified.

Westinghouse Response:

Uncertainty information, including the associated variance and covariance matrix data, are used as inputs to the least squares adjustment code, however, they are not part of the code itself.

To elaborate on this point, the application of the least squares methodology requires the following input:

1) The calculated neutron energy spectrum and associated uncertainties at the measurement location.

2) The measured reaction rate and associated uncertainty for each sensor contained in the multiple foil set.

3) The energy dependent dosimetry reaction cross-sections and associated uncertainties for each sensor contained in the multiple foil sensor set.

For a given application, the calculated neutron spectrum is obtained from the results of plant specific neutron transport calculations applicable to the irradiation period experienced by the dosimetry sensor set. The sensor reaction rates are derived from the measured specific activities obtained from the counting laboratory using the specific irradiation history of the sensor set to perform the radioactive decay corrections. The dosimetry reaction cross-sections and uncertainties are obtained from the Sandia National Laboratory - Radiation Metrology Laboratory (SNLRML) dosimetry cross-section library. The SNLRML library is an evaluated dosimetry reaction cross-section compilation recommended for use in LWR evaluations by ASTM Standard E1018, "Application of ASTM Evaluated Cross-Section Data File, Matrix E 706 (IIB)". There are no additional data or data libraries built into the least squares adjustment code system. All of the required input is supplied externally at the time of the analysis.

The uncertainties associated with the measured reaction rates, dosimetry cross-sections, and calculated neutron spectrum are input to the least squares procedure in the form of variances and covariances. The assignment of the input uncertainties also follows the guidance provided in ASTM Standard E 944.

The following provides a summary of the uncertainties associated with a typical least squares evaluation in a present day LWR dosimetry set:

Reaction Rate Uncertainties

The overall uncertainty associated with the measured reaction rates includes components due to the basic measurement process, the irradiation history corrections, and the corrections for competing reactions. A high level of accuracy in the reaction rate determinations is assured by utilizing laboratory procedures that conform to the ASTM National Consensus Standards. In all cases, the latest available versions of the applicable standard are used in the dosimetry evaluations.

From these standards, it is noted that the achievable uncertainties in the measured specific activities of each of the sensors comprising typical multiple foil sensor sets are as follows:

Reaction	Precision	Bias
$^{63}Cu(n,\alpha)^{60}Co$	1%	3%
$^{46}Ti(n,p)^{46}Sc$	1%	3%
$^{54}Fe(n,p)^{54}Mn$	1%	3%
$^{58}Ni(n,p)^{58}Co$	1%	3%
$^{238}U(n,f)FP$	1%	5%
$^{237}Np(n,f)FP$	1%	5%
$^{59}Co(n,\gamma)^{60}Co$	1%	5%

These uncertainties include the impacts of counting statistics, sample weighing, detector calibration, source/detector geometry corrections, and product nuclide branching ratios.

In determining reaction rates from the measured specific activities, the following additional uncertainties are incurred:

Reaction	Fission Yield	Product Half-Life	Competing Reactions
$^{63}Cu(n,\alpha)^{60}Co$		0.02%	
$^{46}Ti(n,p)^{46}Sc$		0.2%	
$^{54}Fe(n,p)^{54}Mn$		0.2%	
$^{58}Ni(n,p)^{58}Co$		0.2%	
$^{238}U(n,f)FP$	1%	0.1%	4%
$^{237}Np(n,f)FP$	2%	0.1%	1%
$^{59}Co(n,\gamma)^{60}Co$		0.02%	

After combining all of these uncertainty components, the sensor reaction rates derived from the counting and data evaluation procedures typically result in the following net uncertainties associated with the sensor reaction rates that are input to the least squares evaluation:

Reaction	Reaction Rate Uncertainty
$^{63}Cu(n,\alpha)^{60}Co$	5%
$^{46}Ti(n,p)^{46}Sc$	5%
$^{54}Fe(n,p)^{54}Mn$	5%
$^{58}Ni(n,p)^{58}Co$	5%
$^{238}U(n,f)FP$	10%
$^{237}Np(n,f)FP$	10%
$^{59}Co(n,\gamma)^{60}Co$	5%

The listed uncertainty values are at the 1σ level.

In addition to the use of ASTM National Consensus Standards in the evaluation of sensor reaction rates, these procedures have been periodically tested via round robin counting exercises included as a part of the NRC Sponsored Light Water Reactor Surveillance Dosimetry Improvement Program (LWR-SDIP) as well as by evaluation of fluence counting standards provided by the National Institute of Science and Technology (NIST). A summary of some of these counting validations is as follows:

1980 Round robin counting of foil sets irradiated at the Thermal Shield Back (TSB) and Pressure Vessel Face (PVF) positions of the PCA simulator.

1981 Round robin counting of additional foil sets included in the first metallurgical simulated surveillance capsule, also irradiated in the PCA benchmark mockup.

These two counting exercises involved direct comparisons with measurements obtained by The Hanford Engineering Development Laboratory (HEDL). At the time of these irradiations, HEDL was a prime contractor providing measurement services for the PCA benchmark and was cross-calibrated with NIST and the MOL Laboratory in Belgium.

1985 Counting and evaluation of $^{46}Ti(n,p)^{46}Sc$, $^{54}Fe(n,p)^{54}Mn$, and $^{58}Ni(n,p)^{58}Co$ certified fluence standards supplied by NIST.

Comparisons with fluence standards involve the determination not only of the reaction rate of each foil, but also of the spectrum averaged cross-section in the NIST ^{235}U irradiation facility. Thus, the comparisons with the certified fluence standards test both the measurement process and the energy dependent reaction cross-sections used in the evaluation.

1992 Counting of NIST foils irradiated in an ex-vessel dosimetry experiment at the Trojan power reactor.

This exercise involved duplicate counting of a subset of irradiated foils by both Westinghouse and NIST to assure adequate cross-calibration of the laboratories so that data could be confidently mixed in the overall fluence evaluations performed by NIST and ORNL.

Results of these counting intercomparisons are summarized as follows:

	[Westinghouse]/[HEDL]		[Westinghouse]/[HEDL]		
Reaction	1980	1981	1985	1992	Average
$^{63}Cu(n,\alpha)^{60}Co$	1.041	1.018		0.969	1.009
$^{46}Ti(n,p)^{46}Sc$	1.036		1.012	1.030	1.026
$^{54}Fe(n,p)^{54}Mn$	1.006	1.008	1.011	1.056	1.020
$^{58}Ni(n,p)^{58}Co$	1.006	0.990	1.028	1.029	1.013
$^{238}U(n,f)FP$	1.014	1.014			1.014
$^{237}Np(n,f)FP$	1.006	1.017			1.012
$^{59}Co(n,\gamma)^{60}Co$	1.017	1.017			1.017

These comparisons demonstrate that the procedures used by Westinghouse in the determination of reaction rates have produced accurate and stable results over an extended period. The cross-comparisons with HEDL and NIST support the reaction rate uncertainties used by Westinghouse in performing LWR fluence evaluations.

Dosimetry Cross-Section Uncertainties

The reaction rate cross-sections used in the neutron fluence evaluations are taken from the SNLRML library. This data library provides reaction cross-sections and associated uncertainties, including covariances, for 66 dosimetry sensors in common use. Both cross-sections and uncertainties are provided in a fine multigroup structure for use in least squares adjustment applications. These cross-sections were compiled from the most recent cross-section evaluations and they have been tested with respect to their accuracy and consistency for least squares evaluations. Further, the library has been empirically tested for use in fission spectra determination as well as in the fluence and energy characterization of 14 MeV neutron sources. Detailed discussions of the contents of the SNLRML library along with the evaluation process for each of the sensors may be obtained in the RSIC Data Library Collection DLC-178, "SNLRML Recommended Dosimetry Cross-Section Compendium," dated July 1994.

For sensors of interest to LWR dosimetry applications, the following uncertainties in the fission spectrum averaged cross-sections are provided in the SNLRML documentation package.

Reaction	Uncertainty
$^{63}Cu(n,\alpha)^{60}Co$	4.08-4.16%
$^{46}Ti(n,p)^{46}Sc$	4.51-4.87%
$^{54}Fe(n,p)^{54}Mn$	3.05-3.11%
$^{58}Ni(n,p)^{58}Co$	4.49-4.56%
$^{238}U(n,f)FP$	0.54-0.64%
$^{237}Np(n,f)FP$	10.32-10.97%
$^{59}Co(n,\gamma)^{60}Co$	0.79-3.59%

These tabulated ranges provide an indication of the dosimetry cross-section uncertainties associated with typical sensor sets used in LWR irradiations.

Calculated Neutron Spectrum

The neutron spectrum input to the least squares adjustment procedure is obtained directly from the results of plant specific transport calculations for each sensor location. The spectrum at each location is input in an absolute sense (rather than as simply a relative spectral shape). Therefore, within the constraints of the assigned uncertainties, the calculated data are treated equally with the measurements.

While the uncertainties associated with the reaction rates are obtained from the measurement procedures and counting benchmarks and the dosimetry cross-section uncertainties are supplied directly with the SNLRML library, the uncertainty matrix for the calculated spectrum is constructed from the following relationship:

$$M_{g'g} = R_n^2 + R_g * R_{g'} * P_{g'g}$$

where R_n specifies an overall fractional normalization uncertainty and the fractional uncertainties $R_{g'}$ and R_g specify additional random groupwise uncertainties that are correlated with a correlation matrix given by:

$$P_{g'g} = [1-\theta] * \delta_{g'g} + \theta * e^{-H}$$

where

$$H = \frac{(g-g')^2}{2\gamma^2}$$

The first term in the correlation matrix equation specifies purely random uncertainties, while the second term describes the short-range correlations over a group range γ (θ specifies the strength of the latter term). The value of δ is 1.0 when g = g' and is 0.0 otherwise.

A typical set of parameters defining the input uncertainties for the calculated spectrum is as follows:

Flux Normalization Uncertainty (R_n)	15%
Flux Group Uncertainties (R_g, $R_{g'}$)	
(E > 0.0055 MeV)	15%
(0.68 eV < E < 0.0055 MeV)	29%
(E < 0.68 eV)	52%
Short Range Correlation (θ)	
(E > 0.0055 MeV)	0.9
(0.68 eV < E < 0.0055 MeV)	0.5
(E < 0.68 eV)	0.5
Flux Group Correlation Range (γ)	
(E > 0.0055 MeV)	6
(0.68 eV < E < 0.0055 MeV)	3
(E < 0.68 eV)	2

For this typical spectrum correlation matrix, the combination of the normalization uncertainty with the group dependent random uncertainties results in the following overall uncertainty in the calculated spectrum for the three energy ranges defined above.

(E > 0.0055 MeV)	21%
(0.68 eV < E < 0.0055 MeV)	56%
(E < 0.68 eV)	74%

These uncertainty assignments are consistent with an industry consensus uncertainty of 15-20% (1σ) for the integral flux above 1.0 MeV and provide for a reasonable increase in the uncertainty for neutrons in the intermediate and thermal energy ranges.

As a final remark, it should be noted that the counting of the dosimetry sensor sets, dosimetry cross-section libraries, and transport calculations will be based on the latest guidelines and standards available when the AP1000 plant has been built and the dosimetry is evaluated.

Design Control Document (DCD) Revision:

None

PRA Revision:

None

AP1000 DESIGN CERTIFICATION REVIEW

Response to Request For Additional Information

RAI Number: 440.038

Question:

Section 5.3.4.1, on reactor vessel integrity and design states that "..reactor vessel is designed and fabricated ... to General Design Criteria 1, General Design Criteria 30 and 50.55a..." You should also state that General Design Criteria 14 and 31 are also applicable in the pressure vessel design.

Westinghouse Response:

General Design Criteria 14 and 31 will be added to the design criteria for the reactor vessel in DCD section 5.3.4.1.

Design Control Document (DCD) Revision:

From DCD page 5.3-15:

The reactor vessel is designed and fabricated in accordance with the quality standards set forth in 10 CFR 50, General Design Criteria 1, ~~General Design Criteria~~**14**, 30, **31** and 50.55a and the requirements of the American Society of Mechanical Engineers (ASME) Code, Section III. Principal design parameters of the reactor vessel are given in Table 5.3-5. The vessel design and construction enables inspection in accordance with the ASME Code, Section XI.

PRA Revision:

None

AP1000 DESIGN CERTIFICATION REVIEW

Response to Request For Additional Information

RAI Number: 440.039

Question:

In Tier 2 information, Table 5.4-1 provides the AP1000 canned-motor RCP design parameters, including the design flow, developed head, and motor/pump rotor moment of inertia.

Provide an AP1000 canned-motor pump head-capacity design values.

Westinghouse Response:

Table 5.4-1 provides the design flow and developed head for the reactor coolant pump. The developed head in the table is the design head. Therefore, the design point for the reactor coolant pump as given in the table is 78,750 gpm @ 365 ft head.

Design Control Document (DCD) Revision:

None

PRA Revision:

None

AP1000 DESIGN CERTIFICATION REVIEW

Response to Request For Additional Information

RAI Number: 440.042

Question:

Section 5.4.1.2.1 states that the two canned-motor pumps that connected to the two outlet nozzles on each steam generator head turn in the same direction.

Explain why the AP1000 design changes the turning direction of the canned-motor pumps from the AP600 design, where the two pumps turn in opposite direction.

Westinghouse Response:

The AP1000 reactor coolant pumps have a radial discharge nozzle that allows the pumps to turn in the same direction. In contrast, the AP600 reactor coolant pumps have a tangential discharge nozzle that requires that the two pumps connected to a steam generator turn in opposite directions.

Design Control Document (DCD) Revision:

None

PRA Revision:

None

AP1000 DESIGN CERTIFICATION REVIEW

Response to Request For Additional Information

RAI Number: 440.044

Question:

10 CFR 50.34(f)(2)(xiii), regarding TMI Action Item II.E.3.1, requires that the pressurizer heaters be provided with a sufficient power supply and associated motive and control power interfaces to establish and maintain natural circulation in hot standby conditions with only on-site power available. Section 5.4.5.3.1 states that the AP1000 design conforms to this requirement because the pressurizer heater buses can be powered from the on-site diesel generators via manual alignment with sufficient capability to establish and maintain natural circulation in hot standby conditions. It also states that natural circulation cooling for a loss of all alternating-current (ac) power is a design basis for the AP1000, and that under a loss of all ac power, cooling is provided by the passive residual heat removal system (PRHRS). Since the AP1000 diesel generators are of non-safety grade design, the staff considers that the PRHRS with proper capability may provide an alternative to meet the intent of 10 CFR 50.34(f)(2)(xiii) to ensure availability of a safety grade decay heat removal method.

Provide analyses and/or test data to demonstrate and confirm the capability and reliability of the AP1000 PRHRS to maintain natural circulation cooling in hot standby conditions without the pressurizer heater power supply.

Westinghouse Response:

The AP1000 non-LOCA analyses contained in Section 19E.4.10.2 of the Design Control Document provides an analysis that demonstrates the capability of the PRHR to maintain natural circulation cooling in hot standby conditions and reduce the core average temperature to the safe shutdown temperature of 420 F. The transient analyzed is a loss of normal feedwater, and no credit for operation of the pressurizer heaters is taken. Results of this analysis, which lasted up to 48 hours, demonstrates that the RCS remained subcooled even without operation of the pressurizer heaters.

Similar to the design of the AP600, the AP1000 PRHR does not require the RCS to remain subcooled in order for it to perform its safety-related function of decay heat removal. The heat exchanger is designed to remove core decay heat with either subcooled water, saturated water, or saturated steam as its operating fluid. For postulated transients where RCS subcooling may be lost in the long term, some steam could be collected in the top of the steam generator U-tubes bundle (primary side) potentially terminating natural circulation through the primary loops. Such conditions would improve PRHR HX performance because a small amount of steam would be carried through the PRHR inlet lines to the PRHR heat exchanger where it would be

condensed. These conditions increase the natural circulation driving head and heat removal by steam condensation.

Design Control Document (DCD) Revision:

None

PRA Revision:

None

AP1000 DESIGN CERTIFICATION REVIEW

Response to Request For Additional Information

RAI Number: 440.047

Question:

Figure 5.4-6 shows that the relief valve on the suction line of the RNS is normally open and discharges into the containment sump, whereas Figure 5.4.7 shows the same valve to be normally closed and Section 5.4.9.2 states that the discharge from that valve is directed into the containment atmosphere.

Explain and correct the discrepancy.

Westinghouse Response:

DCD Figure 5.4-6 is in error and will be corrected to show the relief valve on the suction line of the RNS as normally closed and discharging to containment atmosphere.

Design Control Document (DCD) Revision:

From DCD page 5.4-100, Figure 5.4-6:

See attached figures for changes.

PRA Revision:

None

Figure From AP1000 DCD Revision 2

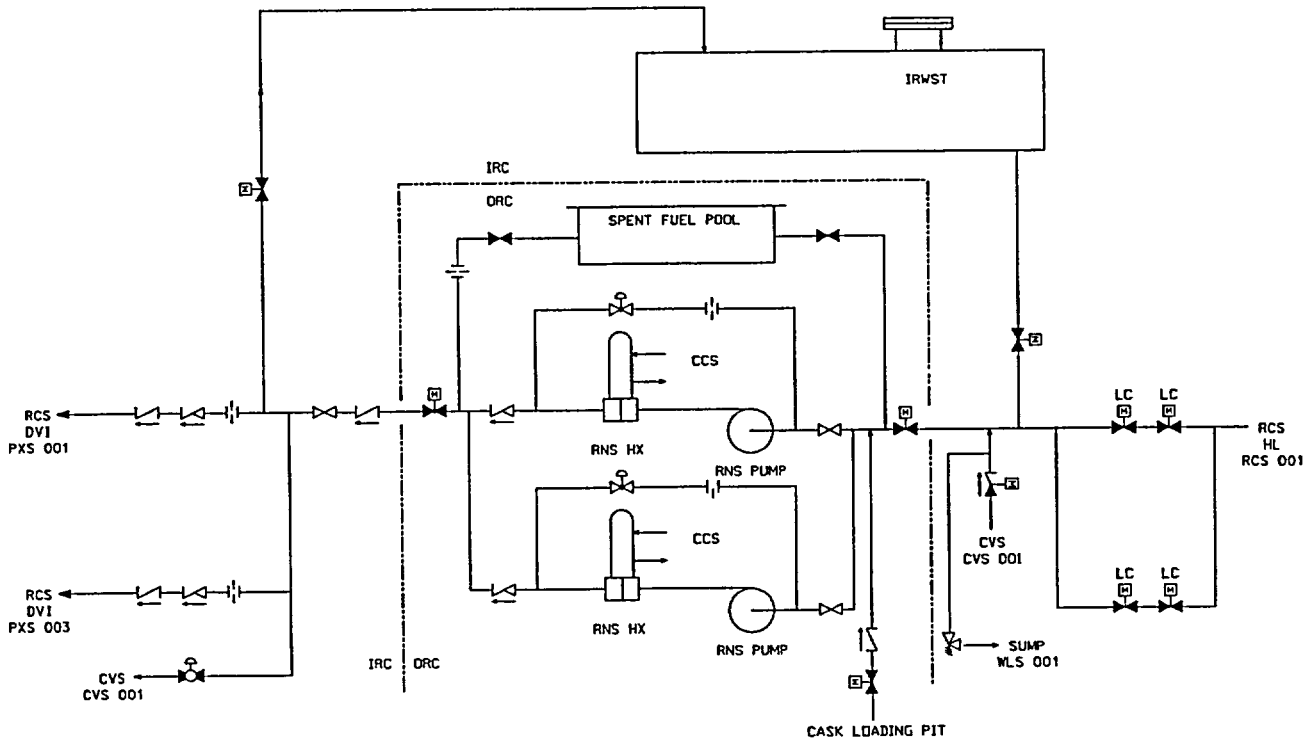

Figure 5.4-6

Normal Residual Heat Removal System

Corrected Figure

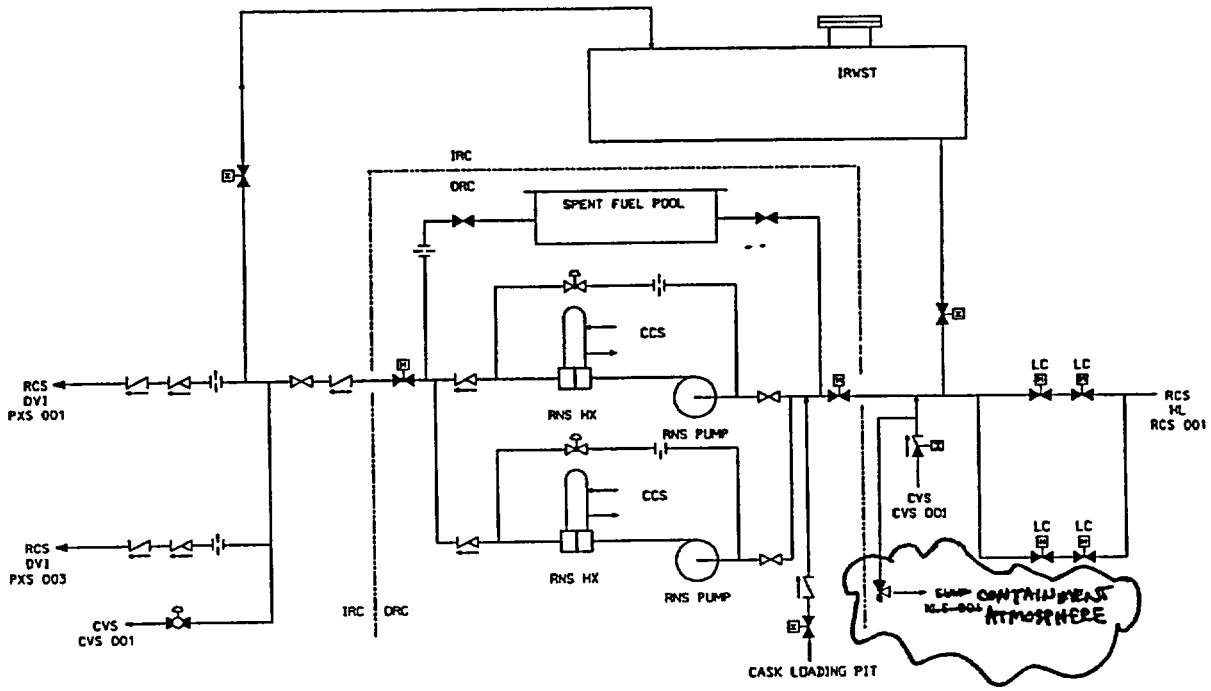

Figure 5.4-6

Normal Residual Heat Removal System

AP1000 DESIGN CERTIFICATION REVIEW

Response to Request For Additional Information

RAI Number: 440.049

Question:

Section 5.4.12 of NUREG-0800, "Standard Review Plan [SRP] for the Review of Safety Analysis Reports for Nuclear Power Plants," specifies that procedures should be developed for use of the vent paths to remove gases that may inhibit core cooling from the U-tubes of the steam generators; and that the procedures to operate the vent system should consider when venting is needed, and when it is not needed, with consideration of a variety of initial conditions, operator actions, and necessary instrumentation.

Describe the AP1000 procedures for venting the RCS system, including the criteria for opening and closing the RVHVS valves and automatic depressurization system (ADS) first stage valves, respectively, the bases for these criteria, the necessary instrumentation, and the procedures.

Westinghouse Response:

The AP1000 reactor vessel head vent provides the plant with a safety-related, single-failure tolerant vent path that could be used to prevent pressurizer overfill following some accident scenarios. The design bases for the head vent include the ability to relieve water from the RCS at a flowrate sufficient to prevent pressurizer overfill during an event where the mass addition from the core makeup tanks (CMTs) causes an increase in pressurizer inventory that otherwise might overfill the pressurizer. In addition, the head vent retains the capability to vent non-condensable gasses that may accumulate in the RCS due to a severe accident.

The reactor vessel head vent valves are opened during plant startup operations to vent air from the reactor vessel head. Once the reactor vessel head is in place and bolted, the reactor coolant system is filled water solid, with the high point vents (including the reactor vessel head vents and the manual pressurizer high point vents) opened to allow air to be vented from the system. After the vents are closed, a reactor coolant pump in each steam generator is started and allowed to run for a short time, and is then stopped. The high point vent lines are then reopened to allow any air that collects in the high points to be vented. The vents are then reclosed, and the venting procedure is repeated until all of the air is removed from the RCS.

In addition to the normal venting procedures during plant startup, the AP1000 reactor vessel head vent could also be used under a design basis accident scenario. Following long-term (> 30 minutes) operation of the CMTs in response to a transient (non-LOCA) event, the pressurizer water level can increase and conservative Chapter 15 accident analyses indicate the pressurizer may eventually become water solid. To avoid this occurrence, the operator opens the head vent valves, based on indication of high pressurizer level, and reduces the inventory in the RCS, and prevents pressurizer overfill. When pressurizer level is sufficiently reduced, the operator recloses the head vent valves. In this case the operator uses pressurizer level as the primary indication to control operation of the reactor vessel head vent.

Other reactor vessel head vent operations are a result of multiple failures in the passive safety-related systems including multiple ADS failures or possibly multiple failures in the passive RHR system. In these cases, manual operation is based on the operator recognizing the multiple failures in the passive safety-related systems, or based on high pressurizer level (in the case of multiple PRHR failures) as described above. In these cases, operation of the reactor vessel head vent prevents a buildup of non-condensable gasses in the RCS. The venting of non-condensable gasses is not a safety-related function required for mitigating design basis events.

Manual operation of the first stage ADS valves is not required to mitigate design basis accidents. Manual operation of the first stage ADS valves is performed in the case of multiple failures of safety-related systems, or is performed as a recovery action from a design basis event. Examples include manual operation of the first stage ADS in response to a steam generator tube rupture event if other means of RCS depressurization have failed, or manual operation to reduce the pressure in the RCS following a transient to allow initiation of the nonsafety-related normal RHR system. Manual operation of the ADS valves is also performed on indication of high core exit temperature indicative of a core damage event, or in the case of failure of the ADS valves to operate when required. Venting of the ADS valves under these circumstances helps mitigate these events by depressurizing the RCS and preventing the buildup of non-condensable gases.

Design Control Document (DCD) Revision:

None

PRA Revision:

None

AP1000 DESIGN CERTIFICATION REVIEW

Response to Request For Additional Information

RAI Number: 440.050

Question:

In Tier 2 Information, Section 6.3 describes the passive core cooling system. Each of the core makeup tank (CMT) and accumulator outlet injection lines contains a flow-tuning orifice that provides a mechanism for the field adjustment of the injection line resistance to establish the required flow rates assumed in the design. In the AP600 design, flow tuning orifices are also included in the in-containment refueling water storage tank (IRWST) injection lines.

Provide the reason why the AP1000 IRWST injection lines do not have flow-tuning orifices.

Westinghouse Response:

The flow tuning orifices in the AP600 IRWST injection lines had a limited function. The IRWST line B had a portion of 10" pipe from the IRWST to the RNS pump suction connection. The rest of the line is 8". All of line A is 8". As a result, line B would of had a lower line resistance than line A. The only function of the orifices were to limit the minimum resistance of line B to be no less than the minimum resistance of line A. This tuning minimized the potential spill in case of a DVI break in line B.

For AP1000 both lines have the same diameters; both have a 10" section connected to the IRWST that changes to 8" just before the connection with the recirculation lines. As a result the resistances of the two lines are nearly the same. In addition, elimination of the orifices eliminates large flanges, which helps to accommodate the larger pipe size in the AP1000 (from a physical space view). The minimum and maximum line resistances have been calculated for these two lines. This calculation accounts for not having flow tuning orifices. Those resistances have been used in the safety analysis performed for the DCD and they have been used in the ITAAC acceptance criteria.

Design Control Document (DCD) Revision:

None

PRA Revision:

None

AP1000 DESIGN CERTIFICATION REVIEW

Response to Request For Additional Information

RAI Number: 440.051

Question:

In Tier 2 Information, Table 6.3-3 indicates that the containment recirculation line motor-operated valves (MOV), V117A/B, are normally open. Figures 6.3-2 and 6.3-3 also show these MOVs are normally open. However, Section 6.3.2.1.3 states that "when the in-containment refueling water storage tank level decreases to a low level, the containment recirculation motor-operated valve and squib valves automatically open to ...," and "... In addition, the motor-operated valve path can be manually open to intentionally drain the in-containment refueling water storage tank to the reactor cavity during severe accidents." These descriptions appear to suggest the MOVs in the recirculation paths are normally closed.

Clarify the apparent discrepancy between Section 6.3.2.1.3 and the related table and figures, and make corrections, if necessary.

Westinghouse Response:

The MOVs in the PXS containment recirculation lines are normally open in the AP1000. They are normally closed in the AP600. This change was made to improve the reliability of opening this line in the PRA. The text in section 6.3 will be revised to make this clear. See DCD revisions below.

Design Control Document (DCD) Revision:

Section 6.3.2.1.3:

Containment recirculation initiates when the recirculation line valves are open and the containment flood-up level is sufficiently high. When the in-containment refueling water storage tank level decreases to a low level, the containment recirculation ~~motor-operated valve and~~ squib valves automatically open to provide redundant flow paths from the containment to the reactor.

These recirculation flow paths can also provide a suction flow path from the containment to the normal residual heat removal pumps, when they are operating after containment flood up. In addition, the **squib valves in the recirculation paths containing normally open** motor-operated valves ~~path~~ can be manually opened to intentionally drain the in-containment refueling water storage tank to the reactor cavity during severe accidents. This action is modeled in the AP1000 probabilistic risk assessment.

Section 6.3.3.3.2:

Following the initial thermal-hydraulic transient for a loss of coolant accident event, the passive core cooling system continues to supply water to the reactor coolant system for long-term cooling. When the water level in the in-containment refueling water storage tank drops to a low-low level, the water level in the containment has increased to a sufficient level to provide recirculation flow. The in-containment refueling water storage tank low-low level signal opens the squib ~~and motor-operated~~ valves in the lines between the containment and the gravity injection line. Initially, some of the water remaining in the tank drains to the containment until the water levels equalize. During this drain, injection to the core continues. The redundant flow paths provide continued cooling of the core by recirculation of the water in the containment. Figure 6.3-3 and Table 6.3-1 provide process flow information illustrating passive core cooling system performance for the various modes of system operation.

Section 6.3.3.4.3

The in-containment refueling water storage tank injection squib valves automatically open via the same low hot leg level signal that opens the automatic depressurization stage four valves. The operators can also open these injection and depressurization valves via the diverse actuation system. Once these valves open, injection from the in-containment refueling water storage tank provides gravity injection for core cooling. When the in-containment refueling water storage tank level drops to a low level, the squib valves ~~and motor-operated valves~~ in the containment recirculation line automatically open. This action initiates containment recirculation flow, with flow passing through the in-containment refueling water storage tank gravity injection lines, which provides long-term core cooling.

PRA Revision:

None

AP1000 DESIGN CERTIFICATION REVIEW

Response to Request For Additional Information

RAI Number: 440.052

Question:

Section 7.3.1.2.4 describes the actuation logic and "preset time delays" of various stages of the ADS. For example, it states the preset time delay after the core makeup tank Low-1 level setpoint (coincident with the CMT injection signal) for actuation of ADS, stage 1 (ADS-1), subsequent time delays for actuations of ADS, stage 2 (ADS-2) and ADS, stage 3 (ADS-3), and the preset time delay after the CMT Low-2 level setpoint (coincident with low RCS pressure). It also states the preset time delay between the actuation of the isolation valves and the depressurization valves for various stages for the ADS. Table 15.6.5-7 specifies the earliest actuation times (or delay times) for the actuations of various stages of ADS.

Where are the delay times between the actuation of the isolation valves and the depressurization valves for various stages of ADS specified? What are the values assumed in the Chapter 15 design-basis analyses? Do the earliest actuation times for various stages listed on Table 15.6.5-7 include the delay times between the actuation of the isolation and control valves?

Westinghouse Response:

The time delays provided to allow for the opening of ADS isolation valves are included in the time delays shown in Table 15.6.5-7. For example, the ADS stage isolation valves have an maximum opening time of 20 sec. They are actuated on a ADS stage 1 actuation signal without any delay. As a result they will open during the 20 sec time delay shown in Table 15.6.5-7 "20 sec after CMT Low-1". The ADS stage 2 isolation valves have a maximum opening time of 30 sec. They are actuated 40 sec after a stage 1 signal, so that they will be open by the time the ADS stage 2 ADS valves start to open 70 sec after a ADS stage 1 signal. The ADS isolation valves for stage 3 and 4 are sequenced open in the same manner.

The Chapter 15 analysis assumes that the ADS isolation valves are sequenced open during the time delays shown in table 15.6.5-7. As a result, no other inputs to the safety analysis are necessary.

Table 15.6.5-7 shows all of the time delays for the ADS control valves.

Design Control Document (DCD) Revision:

None

AP1000 DESIGN CERTIFICATION REVIEW

Response to Request For Additional Information

PRA Revision:

None