CHAPTER 7†: CONFINEMENT

7.0 INTRODUCTION

Confinement of all radioactive materials in the HI-STORM 100 System is provided by the MPC. The design of the HI-STORM 100 confinement boundary assures that there are no credible design basis events that would result in a radiological release to the environment. The HI-STORM 100 Overpack and HI-TRAC Transfer Cask are designed to provide physical protection for an MPC during normal, off-normal, and postulated accident conditions to assure that the integrity of the MPC confinement boundary is maintained. The inert atmosphere in the MPC and the passive heat removal capabilities of the HI-STORM 100 also assure that the SNF assemblies remain protected from degradation, which might otherwise lead to gross cladding ruptures during dry storage.

A detailed description of the confinement structures, systems, and components important to safety is provided in Chapter 2. The structural adequacy of the MPC is demonstrated by the analyses documented in Chapter 3. The physical protection of the MPC provided by the Overpack and the HI-TRAC Transfer Cask is demonstrated by the structural analyses documented in Chapter 3 and for off-normal and postulated accident conditions in Chapter 11. The heat removal capabilities of the HI-STORM 100 System are demonstrated by the thermal analyses documented in Chapter 4.

This chapter describes the HI-STORM 100 confinement boundary design and describes how the design satisfies the confinement requirements of 10CFR72 [7.0.1]. It also provides an evaluation of postulated radiological releases to the environment under normal, off-normal, and accident conditions of storage to ensure compliance with the limits established by the regulations.

This chapter is in compliance with NUREG-1536 except as noted in Table 1.0.3.

† This chapter has been prepared in the format and section organization set forth in Regulatory Guide 3.61. However, the material content of this chapter also fulfills the requirements of NUREG-1536. Pagination and numbering of sections, figures, and tables are consistent with the convention set down in *Chapter 1,* Section 1.0, herein. Finally, all terms-of-art used in this chapter are consistent with the terminology of the glossary (Table 1.0.1) and component nomenclature of the Bill-of-Materials (Section 1.5).

7.1 CONFINEMENT BOUNDARY

The primary confinement boundary against the release of radionuclides is the cladding of the individual fuel rods. The spent fuel rods are protected from degradation by maintaining an inert gas atmosphere (helium) inside the MPC and keeping the fuel cladding temperatures below the design basis values specified in Chapter 2.

The HI-STORM 100 confinement boundary consists of any one of the seven fully-welded MPC designs described in Chapter 1. Each MPC is identical from a confinement perspective so the following discussion applies to all MPCs. The confinement boundary of the MPC consists of:

- MPC shell
- bottom baseplate
- MPC lid (including the vent and drain port cover plates)
- MPC closure ring
- associated welds

The above items form a totally seal-welded vessel for the storage of design basis spent fuel assemblies.

The MPC requires no valves, gaskets or mechanical seals for confinement. Figure 7.1.1 shows an elevation cross-section of the MPC confinement boundary. All components of the confinement boundary are Important to Safety, Category A, as specified in Table 2.2.6. The MPC confinement boundary is designed and fabricated in accordance with the ASME Code, Section III, Subsection NB [7.1.1] to the maximum extent practicable. Chapter 2 provides design criteria for the confinement design. Section 2.2.4 provides applicable Code requirements. Exceptions to specific Code requirements with complete justifications are presented in Table 2.2.15.

7.1.1 Confinement Vessel

The HI-STORM 100 confinement vessel is the MPC. The MPC is designed to provide confinement of all radionuclides under normal, off-normal and accident conditions. The MPC is designed, fabricated, and tested in accordance with the applicable requirements of ASME, Section III, Subsection NB [7.1.1] to the maximum extent practicable. The MPC shell and baseplate assembly and basket structure are delivered to the loading facility as one complete component. The MPC lid, vent and drain port cover plates, and closure ring are supplied separately and are installed following fuel loading. The MPC lid and closure ring are welded to the upper part of the MPC shell at the loading site to provide redundant sealing of the confinement boundary. The vent and drain port

cover plates are welded to the MPC lid after the lid is welded to the MPC. The welds forming the confinement boundary are described in detail in Section 7.1.3.

The MPC lid is made intentionally thick to minimize radiation exposure to workers during MPC closure operations, and is welded to the MPC shell. The vent and drain port cover plates are welded to the MPC lid following completion of MPC draining, moisture removal, and helium backfill activities to close the MPC vent and drain openings. The MPC lid has a stepped recess around the perimeter for accommodating the closure ring. The MPC closure ring is welded to the MPC lid on the inner diameter of the ring and to the MPC shell on the outer diameter. The combination of the welded MPC lid and closure ring form the redundant closure of the MPC.

Table 7.1.1 provides a summary of the design ratings for normal, off-normal and accident conditions for the MPC confinement vessel. Tables 1.2.2, 2.2.1, and 2.2.3 provide additional design basis information.

The design basis leakage rate for the MPC confinement boundary is provided in Table 7.1.1. The MPC shell and baseplate are helium leakage tested during fabrication in accordance with the requirements defined in Chapter 9. Following fuel loading and MPC lid welding, the MPC lid-to-shell weld is examined by liquid penetrant method (root and final), volumetrically examined (if volumetric examination is not performed, multi-layer liquid penetrant examination must be performed), helium leakage tested, and hydrostatically tested. If the MPC lid weld is acceptable, the vent and drain port cover plates are welded in place, examined by the liquid penetrant method (root and final), and a leakage rate test is performed. Finally, the MPC closure ring is installed, welded and inspected by the liquid penetrant method (root, if multiple pass, and final). Chapters 8, 9, and 12 provide procedural guidance, acceptance criteria, and Technical Specifications, respectively, for performance and acceptance of liquid penetrant examinations, volumetric examination, hydrostatic testing, and leakage rate testing of the field welds on the MPC.

After moisture removal, the MPC cavity is backfilled with helium. The helium backfill provides an inert atmosphere within the MPC cavity that precludes oxidation and hydride attack of the SNF cladding. Use of a helium atmosphere within the MPC contributes to the long-term integrity of the fuel cladding, reducing the potential for release of fission gas or other radioactive products to the MPC cavity. Helium also aids in heat transfer within the MPC and reduces the maximum fuel cladding temperatures. MPC inerting, in conjunction with the thermal design features of the MPC and storage cask, assures that the fuel assemblies are sufficiently protected against degradation, which might otherwise lead to gross cladding ruptures during long-term storage.

7.1.2 Confinement Penetrations

The MPC penetrations are designed to prevent the release of radionuclides under all normal, off-normal and accident conditions of storage. Two penetrations (the MPC vent and drain ports) are provided in the MPC lid for MPC draining, moisture removal and backfilling during MPC loading operations, and for fuel cool-down and MPC flooding during unloading operations. No other

confinement penetrations exist in the MPC. The MPC vent and drain ports are equipped with metal-to-metal seals to minimize leakage and withstand the long-term effects of temperature and radiation. The vent and drain connectors allow the vent and drain ports to be operated like valves and prevent the need to hot tap into the penetrations during unloading operations. The MPC vent and drain ports are sealed by cover plates which are seal welded to the MPC lid. No credit is taken for the seal provided by the vent and drain ports. The MPC closure ring covers the vent and drain port cover plate welds and the MPC lid-to-shell weld providing the redundant closure of the MPC vessel. The redundant closures of the MPC satisfy the requirements of 10CFR72.236(e) [7.0.1].

The MPC has no bolted closures or mechanical seals. The confinement boundary contains no external penetrations for pressure monitoring or overpressure protection.

7.1.3 Seals and Welds

The MPC is designed, fabricated, and tested in accordance with the applicable requirements of ASME, Section III, Subsection NB [7.1.1] to the maximum extent practicable. The MPC has no bolted closures or mechanical seals. Section 7.1.1 describes the design of the confinement vessel welds. The welds forming the confinement boundary are summarized in Table 7.1.2.

Confinement boundary welds are performed, inspected, and tested in accordance with the applicable requirements of ASME Section III, Subsection NB [7.1.1] to the maximum extent practicable. The use of multi-pass welds, root pass, for multiple pass welds, and final surface liquid penetrant inspection, and volumetric examination essentially eliminates the chance of a pinhole leak through the weld. If volumetric examination is not performed, multi-layer liquid penetrant examination must be performed. Welds are also helium leak tested, providing added assurance of weld integrity. Additionally, a hydrostatic test is performed on the MPC lid-to-shell weld to confirm the weld's structural integrity. The ductile stainless steel material used for the MPC confinement boundary is not susceptible to delamination or hydrogen-induced weld degradation. The closure weld redundancy assures that failure of any single MPC confinement boundary closure weld does not result in release of radioactive material to the environment. Table 7.1.3 provides a summary of the closure weld examinations and tests.

7.1.4 Closure

The MPC is a totally seal-welded pressure vessel. The MPC has no bolted closure or mechanical seals. The MPC's redundant closures are designed to maintain confinement integrity during normal conditions of storage, and off-normal and postulated accident conditions. There are no unique or special closure devices. Primary closure welds (lid-to-shell and vent/drain port cover plate-to-lid) are examined and leakage tested to ensure their integrity. A description of the MPC weld examinations is provided in Chapter 9.

Since the MPC uses an entirely welded redundant closure system, no direct monitoring of the closure is required. Section 11.2.1.4 describes requirements for verifying the continued confinement

capabilities of the MPC in the event of off-normal or accident conditions. As discussed in Section 2.3.3.2, no instrumentation is required or provided for HI-STORM 100 storage operations, other than normal security service instruments and TLDs.

7.1.5 Damaged Fuel Container

The MPC is designed to allow for the storage of specified damaged fuel assemblies and fuel debris in a specially designed damaged fuel container (DFC). Fuel assemblies classified as damaged fuel or fuel debris as specified in the Approved Contents Section of Appendix B to the CoC have been evaluated.

To aid in loading and unloading, damaged fuel assemblies and fuel debris will be loaded into stainless steel DFCs prior to placement in the HI-STORM 100 System. The DFCs that may be loaded into the MPCs are shown in Figures 2.1.1 through Figure 2.1.2c. The DFC is designed to provide SNF loose component retention and handling capabilities. The DFC consists of a smooth-walled, welded stainless steel square container with a removable lid. The container lid provides the means of DFC closure and handling. The DFC is provided with stainless steel wire mesh screens in the top and bottom for draining, moisture removal and helium backfill operations. The screens are specified as a 250-by-250-mesh with an effective opening of 0.0024 inches. There are no other openings in the DFC. The CoC specifies the fuel assembly characteristics for damaged fuel acceptable for loading in the MPC-24E, MPC-24EF, MPC-68, MPC-68F or MPC-68FF and for fuel debris acceptable for loading in the MPC-24EF, MPC-68F or MPC-68FF.

Since the DFC has screens on the top and bottom, the DFC provides no pressure retention function. The confinement function of the DFC is limited to minimizing the release of loose particulates within the sealed MPC. The storage design basis leakage rates are not altered by the presence of the DFCs. The radioactive material available for release from the specified fuel assemblies are bounded by the design basis fuel assemblies analyzed herein.

Table 7.1.1

SUMMARY OF CONFINEMENT BOUNDARY DESIGN SPECIFICATIONS

Design Condition	Design Pressure (psig)	Design Temperature (°F)
Normal	100	MPC Lid: 550
		MPC Shell: 450
		MPC Baseplate: 400
Off-Normal	100	MPC Lid: 775
		MPC Shell: 775
		MPC Baseplate: 775
Accident	200	MPC Lid: 775
		MPC Shell: 775
		MPC Baseplate: 775

Table 7.1.2

MPC CONFINEMENT BOUNDARY WELDS

Confinement Boundary Welds		
MPC Weld Location	**Weld Type†**	**ASME Code Category (Section III, Subsection NB)**
Shell longitudinal seam	Full Penetration Groove (shop weld)	A
Shell circumferential seam	Full Penetration Groove (shop weld)	B
Baseplate to shell	Full Penetration Groove (shop weld)	C
MPC lid to shell	Partial Penetration Groove (field weld)	C
MPC closure ring to shell	Fillet (field weld)	††
Vent and drain port cover plates to MPC lid	Partial Penetration Groove (field weld)	D
MPC closure ring to closure ring radial	Partial Penetration Groove (field weld)	††
MPC closure ring to MPC lid	Partial Penetration Groove (field weld)	C

† The tests and inspections for the confinement boundary welds are listed in Section 9.1.1.

†† This joint is governed by NB-5271 (liquid penetrant examination).

Table 7.1.3

CLOSURE WELD EXAMINATIONS AND TESTS

Closure Weld Description	Inspections/Tests	ASME Acceptance Criteria
MPC Lid-to-Shell	VT on Tack Welds PT Root Pass PT Final Pass VT Final Pass Volumetric Examination of Weld (UT) or multi-layer PT Hydrostatic Test Post Hydrostatic Test - PT Helium Leakage Test	NF-5360 NB-5350 NB-5350 NF-5360 NB-5332 NB-6000 NB-5350 Sect. V and ANSI N14.5
Vent/Drain Cover Plate to MPC Lid	VT on Tack Welds PT Root Pass PT Final Pass VT Final Pass Helium Leakage Test	NF-5360 NB-5350 NB-5350 NF-5360 Sect. V and ANSI N14.5
Closure Ring Radial Welds	VT on Tack Welds PT Root Pass (if multiple pass) PT Final Pass VT Final Pass	NF-5360 NB-5350 NB-5350 NF-5360
Closure Ring-to-MPC Shell	VT on Tack Welds PT Root Pass (if multiple pass) PT Final Pass VT Final Pass	NF-5360 NB-5350 NB-5350 NF-5360
Closure Ring-to-MPC Lid	VT on Tack Welds PT Root Pass PT Final Pass VT Final Pass	NF-5360 NB-5350 NB-5350 NF-5360

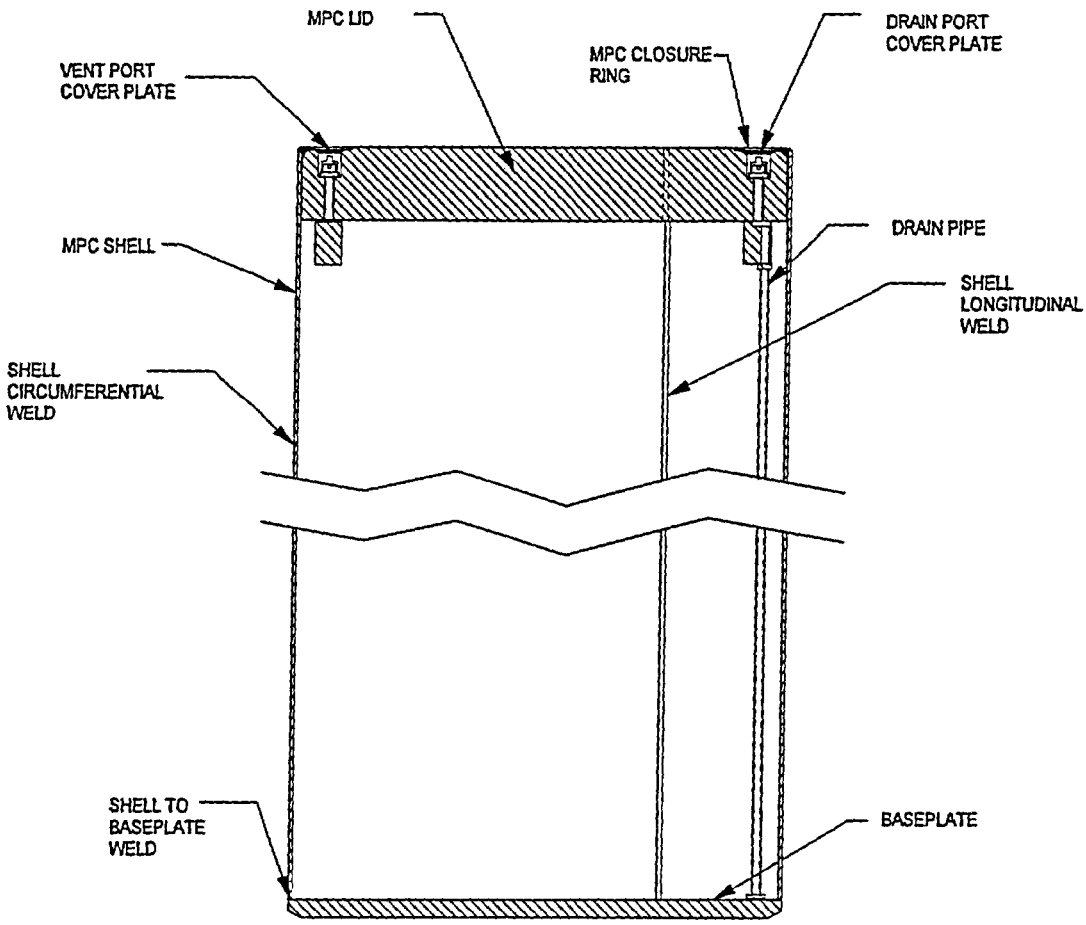

Figure 7.1.1; HI-STORM 100 System Confinement Boundary

7.2 REQUIREMENTS FOR NORMAL AND OFF-NORMAL CONDITIONS OF STORAGE

The MPC uses multiple confinement barriers provided by the fuel cladding and the MPC enclosure vessel to assure that there is no release of radioactive material to the environment. Chapter 3 shows that all confinement boundary components are maintained within their Code-allowable stress limits during normal storage conditions. Chapter 4 shows that the peak confinement boundary component temperatures and pressures are within the design basis limits for all normal conditions of storage. Since the MPC confinement vessel remains intact, and the design bases temperatures and pressure are not exceeded, the design basis leakage rate is not exceeded during normal conditions of storage.

7.2.1 Release of Radioactive Material

The MPC is closed by the MPC lid, the vent and drain port cover plates, and the MPC closure ring. Weld examinations, including multiple surface examinations, volumetric examination, hydrostatic testing, and leakage rate testing on the MPC lid weld, and multiple surface examinations and leakage rate testing of the vent and drain port cover plate welds, assure the integrity of the MPC closure. The MPC is a strength-welded pressure vessel designed to meet the stress criteria of the ASME Code, Section III, Subsection NB [7.1.1]. The all-welded construction of the MPC with redundant closure provided by the fully welded MPC closure ring and extensive inspections and testing ensures that no release of fission gas or crud for normal storage and transfer conditions will occur. The above discussion notwithstanding, an analysis is performed in Section 7.2.7 to calculate the annual dose at 100 meters based on an assumed leakage rate of 5×10^{-6} atm-cm^3/sec under reference test conditions.

7.2.2 Pressurization of the Confinement Vessel

The loaded and sealed MPC is drained, removed of moisture, and backfilled with helium gas. This process provides a chemically non-reactive environment for storage of spent fuel assemblies. First, air in the MPC is displaced with water and then the water is displaced by helium or nitrogen gas during MPC blowdown. The MPC is then removed of all moisture, and backfilled with a predetermined mass of helium as specified in the Technical Specifications. Chapter 8 describes the steps of these processes and the Technical Specifications provide the acceptance criteria. This drying and backfilling process ensures that the resulting inventory of oxidizing gases in the MPC remains below 0.25% by volume, and that the MPC pressure is maintained within the design limitations. In addition, the MPC basket fluid contact areas are stainless steel alloy material or aluminum of extremely high corrosion and erosion resistance. The aluminum oxide layer on the aluminum components (e.g., optional aluminum heat conduction elements and Boral neutron absorption plates) ensures that there is a minimal amount of reaction during the short duration of exposure to the fuel pool water (see Section 3.4.1 for discussion of combustible gas controls during lid welding). Carbon steels are not employed in the construction of the MPCs. Therefore, no protective coatings which could interact with borated spent fuel pool water are used.

The only means of pressure increase in the MPC is from the temperature rise due to normal heat-up to normal operating temperatures and the release of backfill and fission gas contents from fuel rods into the MPC cavity. Under the most adverse conditions of normal ambient temperature, full

insolation, and design basis decay heat, the calculated pressure increase assuming 1% fuel rod failure is well below the system design pressure as shown in Chapter 4. For off-normal conditions of storage, failure of up to 10% of the fuel rods has been analyzed and would result in an MPC internal pressure below the value specified as the normal design pressure.

7.2.3 Confinement Integrity During Dry Storage

There is no credible mechanism or event that results in a release of radioactive material from the MPC under normal conditions. Since the MPC remains structurally intact and provides redundant welded closures as discussed above, the postulated leakage of radioactive material from the MPC will be limited to a leakage rate equivalent to the acceptance test criteria specified for the MPC helium leak tests. Leakage from the MPC during normal conditions of storage could result in the release of gaseous fission products, fines, volatiles and airborne crud particulates as discussed in Section 7.3.1. The conservative assumption is made that 2.5% of the fuel inventory is available for release under normal conditions of storage and 11.5% of the fuel inventory is available for release under off-normal conditions of storage. The maximum cavity internal operating pressure with 10% fuel rod failure reported in Table 4.4.14 is bounded by the use of an internal cavity pressure of 101.4 psia (6.90 ATM), which is assumed as an initial condition for this evaluation.

The annual dose equivalent for the whole body, thyroid and other critical organs to an individual at the site boundary (100 meters) as a result of an assumed effluent release under normal and off-normal conditions of storage were determined. These doses were determined for each type of MPC. The ISFSI controlled area boundary must be at least 100 meters from the nearest loaded HI-STORM 100 System in accordance with 10CFR72.106(b) [7.0.1]. The doses are compared to the regulatory limits specified in 10CFR72.104(a) [7.0.1].

Confinement boundary welds performed at the fabricator=s facility are inspected by volumetric and liquid penetrant examination methods as detailed in Section 9.1. Field welds are performed on the MPC lid, the MPC vent and drain port covers, and MPC closure ring. The weld of the MPC lid-to-shell is liquid penetrant examined on the root and final pass, volumetrically (or multilayer liquid penetrant) examined, hydrostatically tested, and leak rate tested. The vent and drain port cover plates are liquid penetrant examined on the root and final pass and leak rate tested. The MPC closure ring welds are inspected by the liquid penetrant examination method. In Chapter 11, the MPC lid-to-shell weld is postulated to fail to confirm the safety of the HI-STORM 100 confinement boundary. The failure of the MPC lid weld is equivalent to the MPC drain or vent port cover weld failing. The MPC lid weld failure affects the MPC confinement boundary; however, no leakage will occur due to redundant sealing provided by the MPC closure ring.

7.2.4 Control of Radioactive Material During Fuel Loading Operations

The procedures for closure of the MPC, described in Section 8.1, are intended to assure that there is no unintended release of gas, liquid, or solid materials from the MPC during dry storage. During MPC closure operations, the lines used for venting or draining are routed to the plant's spent fuel pool or radioactive waste processing systems. MPC closure operations are performed inside the plant's fuel building in a controlled and monitored environment.

Radioactive effluent handling during fuel loading and MPC draining, moisture removal, helium backfilling, and sealing operations is in accordance with the plant's 10CFR50 license and radioactive waste management system.

7.2.5 External Contamination Control

The external surface of the MPC is protected from contamination by preventing it from coming in contact with the spent fuel pool water. Prior to submergence in the spent fuel pool, an inflatable seal is installed at the top of the annulus formed between the MPC shell and the HI-TRAC transfer cask cavity. This annulus is filled with clean demineralized water and the seal is inflated. The inflated seal, backed by the demineralized water maintained at a slight positive pressure, is sufficient to preclude the entry of contaminated water into the annulus. These steps assure that the MPC surface is free of contamination that could become airborne during storage.

Additionally, following fuel loading operations and removal from the spent fuel pool, the upper end of the MPC shell is surveyed for loose surface contamination in accordance with the Technical Specifications contained in Chapter 12 of this FSAR.

7.2.6 Confinement Vessel Releasable Source Term

As discussed in Section 7.3.1, the source term used to evaluate the annual dose at the minimum controlled area boundary of 100 meters due to leakage from the MPC confinement boundary consists of gaseous fission products, fines, volatiles and airborne crud particulates. For storage of spent fuel assemblies with burnups in excess of 45 GWD/MTU the source term from the assumed rod breakage fractions of ISG-5 [7.2.2] must be augmented by the source term from 50% of the rods having peak cladding thicknesses greater than 70 micrometers. ISG-11 [7.2.1] recommends that for high burnup fuel assemblies to be classified as intact, no more than 3% of the rods may have peak cladding oxide thickness' greater than 70 micrometers and no more than 1% of the rods may have peak cladding oxide thickness' greater than 80 micrometers. Using Equation 7-0 below the fraction of the source term available for release may be determined:

Equation 7-0

$$F_R = F_B * (100\%) + F_{70} * P_S$$

where:

F_R is the percentage of the source term available for release,

F_B is the rod breakage fraction from ISG-5,

F_{70} is the percentage of rods that have peak cladding oxide thicknesses greater than 70 microns

P_S percentage of the source term for rods having peak cladding oxide thickness' greater than 70 microns that must be included in the total source term available for release.

Table 7.2.1 contains a summary of the values required for Equation 7-0 and the results for normal and off-normal conditions of storage. Additionally, a summary of the isotopes available for release is provided in Table 7.3.1.

7.2.7 Release of Contents Under Normal and Off-Normal Storage Conditions

7.2.7.1 Confinement Boundary Leakage Rate

The methodology presented in Section 7.3.3.1 was used to determine the leakage rate at the upstream conditions. Using the capillary diameter determined in Section 7.3.3.1, and the parameters for normal and off-normal conditions provided in Table 7.3.4, Equation 7-3 was solved for the leakage rate at the upstream conditions. The resultant normal and off-normal condition leakage rate, 1.12×10^{-5} cm^3/s (at 581 K, 6.90 ATM) was calculated.

7.2.7.2 Percentage of Nuclides that Remain Airborne

In addition to the small fraction of fines that are released in the event of a cladding breach, only 10% of the fines released to the MPC cavity remain airborne long enough to be available for release from the MPC [7.3.11]. It is conservatively assumed that 100% of the volatiles, crud and gases remain airborne and available for release.

7.2.7.3 Fraction of Volume Released

The minimum free volume of each MPC design is presented in Tables 4.4.12, 4.4.13, 4.4.24, and 4.4.25.: Using conservatively reduced values of these volumes and the upstream normal and off-normal condition leakage rate of 1.12×10^{-5} cm^3/s, the fraction of the volume released per second is calculated. For calculation of the doses from the MPC-24, MPC-24E and MPC-24EF the minimum free volume from the MPC-24E is used as it conservatively bounds the MPC-24 and MPC-24EF.

7.2.7.4 Release Fraction

The release fraction is that portion of the total radionuclide inventory that is released from the inside of the fuel rods to the MPC cavity. The release fractions provided in NUREG/CR-6487 [7.3.2] are used. A summary of the release fractions is provided in Table 7.3.1.

7.2.7.5 Radionuclide Release Rate

The radionuclide release rate is the product of the quantity of isotopes available for release, the number of assemblies, the percentage of nuclides that remain airborne, the fraction of volume released, and the release fraction.

7.2.7.6 Atmospheric Dispersion Factor

For the evaluation of the dose at the controlled area boundary, the instantaneous ?/Q calculated for accident conditions (8.0×10^{-3} sec/m^3) was reduced to 1.6×10^{-4} sec/m^3 based on the long term nature of the release (1 year); the height of the release being essentially a ground level release ($h_e = 0$); all 16 compass directions (22.5 degree sectors) will be similarly affected due to the long term nature of the continuous release (over one year); the increase in average wind speeds (>1 m/s); and the additional effects of a reduction in atmospheric stability. Therefore, the ?/Q reduction factor of 50 used to correct the short term accident release ?/Q is conservative.

7.2.7.7 Dose Conversion Factors

Dose Conversion Factors (DCF) from EPA Federal Guidance Report No. 11, Table 2.1 [7.3.5] and EPA Federal Guidance Report No. 12, Table III.1 [7.3.6] were used for the analysis. The DCFs are provided on the spread sheets included as Appendix 7.A.

7.2.7.8 Occupancy Time

An occupancy time of 8,760 hours is used for the analysis [7.0.2]. This conservatively assumes that the individual is exposed 24 hours per day for 365 days at the minimum controlled area boundary of 100 meters.

7.2.7.9 Breathing Rate

A breathing rate of 3.3×10^{-4} m^3/sec for a worker is used for the analysis [7.0.2]. This assumption is in accordance with the guidance provided in NUREG-1536 [7.0.2] for a worker.

7.2.8 Postulated Doses Under Normal and Off-Normal Conditions of Storage

The annual dose equivalent for the whole body, thyroid and other critical organs to an individual at the site boundary (100 meters) as a result of an assumed effluent release under normal and off-normal conditions of storage were determined. These doses are determined for each type of MPC and for each condition of storage (i.e., normal and off-normal). The postulated doses as a result of exposure

to soil with ground surface contamination and soil contaminated to a depth of 15 cm were also determined. The resultant doses were negligible compared to those resulting from submersion in the plume and are therefore not reported.

The doses were determined using spreadsheet software. The resultant doses are summarized for each MPC type in Tables 7.3.2 through Table 7.3.5 of the HI-STORM FSAR. Example spread sheets used for the dose estimates are presented in Appendix 7.A. Table 7.3.9 compares the doses to the regulatory limits of 10CFR72.104(a).

7.2.8.1 Whole Body Dose

The annual dose equivalent to the whole body (ADE) is the sum of the inhaled committed effective dose equivalent (CEDE) and the deep dose equivalent to the whole body from submersion in the plume. The postulated doses were determined using spreadsheet software. Example spread sheets are provided in Appendix 7.A.

The CEDE is the product of radionuclide release rate, the atmospheric dispersion factor, the occupancy time, the breathing rate, and the effective dose conversion factor.

The Deep Dose Equivalent is the product of the nuclide release rate, the atmospheric dispersion factor, the occupancy time, and the effective dose conversion factor.

7.2.8.2 Critical Organ Dose

The Annual Dose Equivalent (ADE) to the critical organ (or tissue) is the sum of the committed dose equivalent (CDE) to the critical organ or tissue from inhalation and the deep dose equivalent (DDE) to the organ or tissue from submersion in the plume. The postulated doses as a result of exposure to soil with ground surface contamination and soil contaminated to a depth of 15 cm were also determined. The resultant doses were negligible compared to those resulting from submersion in the plume and are therefore not reported.

The committed dose equivalent to the organ or tissue from inhalation is the product of *the* radionuclide release rate, the atmospheric dispersion factor, the occupancy time, the breathing rate, and the organ/tissue dose conversion factor. The deep dose equivalent to the organ or tissue from submersion in the plume is the product of the radionuclide release rate, the atmospheric dispersion factor, the occupancy time, and the organ/tissue dose conversion factor.

7.2.8.3 Site Boundary

The estimated annual dose equivalent for critical organs and the whole body at the minimum site boundary of 100 meters are presented in Tables 7.3.2 through 7.3.5. Since doses from any one MPC does not bound the doses from all other MPCs, bounding doses have been presented in Table 7.3.8 for BWR fuel (MPC-68, MPC-68F and MPC-68FF) and PWR fuel (MPC-24, MPC-24E, MPC-24EF and MPC-32) separately. The doses from the MPC-68 bound the doses from all casks containing

BWR fuel and the doses from the MPC-32 bounds the doses from all casks containing PWR fuel. Additionally, Table 7.3.8 compares these bounding doses to the regulatory limits of 10CFR72.104(a).

7.2.9 Assumptions

The following presents a summary of assumptions for the normal condition confinement analysis of the HI-STORM 100 System.

- The distance from the cask to the site boundary is 100 meters.
- Under normal conditions of storage, 2.5% of the source term is available for release. Under off-normal conditions of storage, 11.5% of the source terms are available for release. This assumption is in accordance with ISG-5 [7.2.2], ISG-11 [7.2.1] and NUREG-1536 [7.0.2] for normal and off-normal storage conditions.
- Unchoked flow correlations were used as the unchoked flow correlations better approximate the true measured flow rate for the leakage rates.
- For conservatism, the upstream pressure at reference test conditions (inside of the MPC) is assumed to be 2 ATM and the down stream pressure (outside of the MPC) is assumed to be 1 ATM.
- The leak hole diameter is determined using reference test conditions rather than actual test conditions from Table 7.3.7. This is conservative, as it yields a larger leak hole diameter.
- The temperature at test conditions is assumed to be equal to a temperature, 212° F based on the maximum temperature achievable by the water in the MPC during performance of the leak test. This is conservative because the leak hole diameter computed from test conditions is larger.
- Off-normal storage conditions (i.e., MPC cavity at a pressure of 101.4 psia (6.90 ATM) at MPC cavity average temperature of 581 K) are postulated for this analysis as these conditions bound the normal conditions of storage.
- The capillary length required for Equation 7-3 was conservatively chosen to be the MPC lid closure weld which is 1.9 cm.
- The majority of the activity associated with crud is due to ^{60}Co. This assumption follows from the discussion provided in NUREG/CR-6487 [7.3.2].
- The normal and off-normal condition leakage rate persists for one year without a decrease in the rate or nuclide concentration.
- The individual at the site boundary is exposed for 8,760 hours [7.0.2]. This conservatively assumes that the individual is exposed 24 hours per day for 365 days.

- A breathing rate of 3.3×10^{-4} m^3/sec for a worker is used for the analysis [7.0.2]. This assumption is in accordance with the guidance provided in NUREG-1536 for a worker.

- All fuel stored in the MPC is of the design basis type with a bounding burnup and cooling time.

- Exposure to dose conversion factors for inhalation reported in EPA Federal Guidance Report No. 11, Table 2.1 [7.3.5] were selected by the most restrictive clearance class for each organ and each radionuclide.

- For conservatism, the maximum possible leakage rate under reference test conditions is assumed to be 7.5×10^{-6} atm-cm^3/s, which is 150% of the reference test leak rate of 5.0×10^{-6} atm-cm^3/s.

Table 7.2.1
Parameters for Determining the Percentage of the Source Term Available for Release

MPC-24, MPC-24E, MPC-24EF, MPC-32, MPC-68 and MPC-68FF

Parameter	Normal	Off-Normal
F_B	.01	.10
F_{70}	3.0%	3.0%
P_S	50%	50%
F_R	2.5%	11.5%

MPC-68F

Parameter	Normal	Off-Normal
F_R	1.0%	10.0%

7.3 CONFINEMENT REQUIREMENTS FOR HYPOTHETICAL ACCIDENT CONDITIONS

The MPC uses redundant confinement closures to assure that there is no release of radioactive materials, including fission gases, volatiles, fuel fines or crud, for postulated storage accident conditions. The analyses presented in Chapters 3 and 11 demonstrate that the MPC remains intact during all normal, off-normal and postulated accident conditions, including the associated increased internal pressure due to decay heat generated by the stored fuel. The MPC is designed, fabricated, and tested in accordance with the applicable requirements of ASME, Section III, Subsection NB [7.1.1] to the maximum extent practicable. In summary, there is no mechanistic failure that results in a breach of the MPC confinement boundary.

The above discussion notwithstanding, this section evaluates the consequences of a non-mechanistic postulated ground level breach of the MPC confinement boundary. This breach could result in the release of gaseous fission products, fines, volatiles and airborne crud particulates. The internal design accident pressure of 200 psig, as specified in Table 7.1.1, is conservatively increased in the analysis to 225 psig for this evaluation. The following doses to an individual at the site boundary (100 meters) as a result of an assumed effluent release under accident conditions of storage were determined: the committed dose equivalent (CDE) from inhalation and the deep dose equivalent (DDE) from submersion for critical organs and tissues (gonad, breast, lung, red marrow, bone surface, thyroid); the committed effective dose equivalent (CEDE) from inhalation and the deep dose equivalent (DDE) from submersion for the whole body; the lens dose equivalent (LDE) for the lens of the eye; the shallow dose equivalent (SDE) from submersion for the skin; and the resulting Total Effective Dose Equivalent (TEDE) and Total Organ Dose Equivalent (TODE).

These doses were determined for each type of MPC. The ISFSI controlled area boundary must be at least 100 meters from the nearest loaded HI-STORM 100 System in accordance with 10CFR72.106(b) [7.0.1]. The doses are compared to the regulatory limits specified in 10CFR72.106(b) [7.0.1].

7.3.1 Confinement Vessel Releasable Source Term

In accordance with NUREG/CR-6487 [7.3.2], the following contributions are considered in determining the releasable source term for packages designed to transport irradiated fuel rods: (1) the radionuclides in the fuel rods, (2) the radionuclides on the surface of the fuel rods, and (3) the residual contamination on the inside surfaces of the vessel. NUREG/CR-6487 goes on to state that a radioactive aerosol can be generated inside a vessel when radioactive material from the fuel rods or from the inside surfaces of the container become airborne. The sources for the airborne material are (1) residual activity on the cask interior, (2) fission and activation-product activity associated with corrosion-deposited material (crud) on the fuel assembly surface, and (3) the radionuclides within the individual fuel rods. In accordance with NUREG/CR-6487, contamination due to residual activity on the cask interior surfaces is negligible as compared to crud deposits on the fuel rods themselves and therefore may be neglected. The source term considered for this calculation results from the

spallation of crud from the fuel rods and from the fines, gases and volatiles which result from cladding breaches. The methodology of NUREG/CR-6487 is conservatively applied to the storage confinement accident analysis as dry storage conditions are less severe than transport conditions.

The inventory for isotopes other than ^{60}Co is calculated with the SAS2H and ORIGEN-S modules of the SCALE 4.3 system as described in Section 5.2. The inventory for the MPC-24, MPC-24E, MPC-24EF and MPC-32 was conservatively based on the B&W 15x15 fuel assembly with a burnup of 70,000 MWD/MTU, 5 years of cooling time, and an enrichment of *4.8%*. The inventory for the MPC-68 and MPC-68FF was based on the GE 7x7 fuel assembly with a burnup of *60,000* MWD/MTU, 5 years of cooling time, and 4.4% enrichment. The CoC limits the fuel assembly burnup below 60,000 MWD/MTU for both BWR and PWR fuel at 5 years of cooling time. This ensures that the inventory used in this calculation exceeds that of the fuel authorized for storage. The inventory for the MPC-68F was based on the GE 6x6 fuel assembly with a burnup of 30,000 MWD/MTU, 18 years of cooling time, and 1.8% enrichment. The CoC limits the burnup and cooling time of fuel (intact, damaged or debris) in an MPC-68F to a maximum of 30,000 MWD/MTU at a minimum of 18 years cooling time. Additionally, the MPC-68F was analyzed containing 67 GE 6x6 assemblies and a DFC containing 18 thorium rods. Finally, an Sb-Be source stored in one fuel rod in one assembly with 67 GE 6x6 assemblies was analyzed. The isotopes which contribute greater than 0.1% to the total curie inventory for the fuel assembly are considered in the evaluation as fines. The analysis also includes actinides as the dose conversion factors for these isotopes are in general, orders of magnitude greater than other isotopes (e.g., isotopes of plutonium, americium, curium, and neptunium were included regardless of their contribution to the inventory). A summary of the isotopes available for release is provided in Table 7.3.1.

7.3.2 Crud Radionuclides

The majority of the activity associated with crud is due to ^{60}Co [7.3.2]. The inventory for ^{60}Co was determined by using the crud surface activity for PWR rods (140×10^{-6} Ci/cm^2) and for BWR rods (1254×10^{-6} Ci/cm^2) provided in NUREG/CR-6487 [7.3.2] multiplied by the surface area per assembly (3×10^5 cm^2 and 1×10^5 cm^2 for PWR and BWR, respectively, also provided in NUREG/CR-6487). The source terms were then decay corrected (5 years for the MPC-24, MPC-24E, MPC-24EF, MPC-32, MPC-68 and MPC-68FF; 18 years for the MPC-68F) using the basic radioactive decay equation:

Equation 7-1:

$$A(t) = A_0 e^{-\lambda t}$$

where:

$A(t)$ is activity at time t [Ci]

A_0 is the initial activity [Ci]

λ is the $\ln 2/t_{1/2}$ (where $t_{1/2}$ = 5.272 years for ^{60}Co)

t is the time in years (5 years for the MPC-24, MPC-24E, MPC-24EF, MPC-32, MPC-68 and MPC-68FF; 18 years for the MPC-68F)

Total ^{60}Co crud is 140 $\mu Ci/cm^2$ for PWR and 1254 $\mu Ci/cm^2$ for BWR [7.3.2].

PWR
Surface area per Assy = 3.0E+05 cm^2
140 $\mu Ci/cm^2$ x 3.0E+05 cm^2 = 42.0 Ci

BWR
Surface area per Assy = 1.0E+05 cm^2
1254 $\mu Ci/cm^2$ x 1.0E+05 cm^2 = 125.4 Ci

$^{60}Co(t) = {}^{60}Co_0\, e^{-(\lambda t)}$, where $\lambda = \ln 2/t_{1/2}$, t = 5 years (for the MPC-24, MPC-24E, MPC-24EF, MPC-32 and MPC-68), t = 18 years (MPC-68F), $t_{1/2}$ = 5.272 years for ^{60}Co [7.3.3]

MPC-24, MPC-24E, MPC-24EF and MPC-32

$^{60}Co(5) = 42.0\ Ci\ e^{-(\ln 2/5.272)(5)}$
$^{60}Co(5) = 21.77$ Ci

MPC-68 and MPC-68FF

$^{60}Co(5) = 125.4\ Ci\ e^{-(\ln 2/5.272)(5)}$
$^{60}Co(5) = 64.98$ Ci

MPC-68F

$^{60}Co(18) = 125.4\ Ci\ e^{-(\ln 2/5.272)(18)}$
$^{60}Co(18) = 11.76$ Ci

A summary of the ^{60}Co inventory available for release is provided in Table 7.3.1.

7.3.3 Release of Contents Under Non-Mechanistic Accident Conditions of Storage

7.3.3.1 Confinement Boundary Leakage Rate

The helium leak rate testing performed on the MPC confinement boundary verifies the helium leak rate under reference test conditions to be less than or equal to 5×10^{-6} atm-cm^3/s [1] as required by the Technical Specifications. As demonstrated by analysis, the MPC confinement boundary is not compromised as a result of normal, off-normal, and accident conditions. Based on the robust nature of the MPC confinement boundary, the NDE inspection of the welds, and the measurement of the helium leakage rate, there is essentially no leakage. However, it is conservatively assumed that the maximum possible leakage rate under reference test conditions from the confinement vessel is 7.5×10^{-6} atm-cm^3/s. The actual leakage test is performed at an elevated pressure (90 +10/-0 psig) to magnify the leakage rate. For purposes of determining the leak hole diameter, reference test condition parameters from Table 7.3.7 are used in Equation 7-2 and Equation 7-3 as it results in a larger leak hole diameter.

[1] According to ANSI N14.5 (1997), the mass-like leakage rate specified herein is often used in leakage testing. This is defined as the rate of change of the pressure-volume product of the leaking fluid at test conditions.

Equation B-1 of ANSI N14.5 (1997) [7.3.8] is used to express this mass-like helium flow rate (Q_u) measured in atm-cm^3/s as a function of the upstream volumetric leakage rate (L_u) as follows:

Equation 7-2

$$Q_u = L_u * P_u \quad \text{atm-cm}^3/\text{sec (Equation B-1 from ANSI N14.5(1997))}$$

$$L_u = Q_u/P_u \quad \text{cm}^3/\text{sec}$$

where:

L_u is the upstream volumetric leakage rate [cm^3/s],
Q_u is the mass-like helium leak rate [atm cm^3/s], and
P_u is the upstream pressure [ATM]

The corresponding leakage rate at accident conditions is determined using the following methodology. For conservatism, unchoked flow correlations were used as the unchoked flow correlations better approximate the true measured flowrate for the leakage rates. Using the equations for molecular and continuum flow, Equation B-5 provided in ANSI N14.5-1997 [7.3.8], the corresponding capillary diameter, D, was calculated. For conservatism, the upstream pressure at reference test conditions (inside of the MPC) is assumed to be 2 ATM (minimum) and the down stream pressure (outside of the MPC) is assumed to be 1 ATM (at 298 K), therefore, the average pressure is 1.5 ATM. The evaluation was performed using the helium gas temperature at reference test conditions of both 70°F and 212°F. These temperatures are representative of the possible temperature of the helium gas in the confinement vessel during the helium leak test. The 212°F helium temperature is the upper bound because the water inside the MPC is shown not to boil in Chapter 4 as long as the "time-to-boil" time limit is not exceeded. From the two calculations using the two temperatures, it was determined that the higher temperature (212°F) results in a greater capillary diameter. The capillary length required for Equation 7-3 was conservatively chosen to be the minimum MPC lid closure weld which is 1.9 cm. Table 7.3.6 provides a summary of the parameters used in the calculation.

Equation 7-3

$$L_u = [\frac{2.49x10^6 D^4}{a\,u} + \frac{3.81x10^3 D^3 \sqrt{\frac{T}{M}}}{a\,P_a}][P_u - P_d][\frac{P_a}{P_u}]$$

where:

L_u is the allowable leakage rate at the upstream pressure [cm^3/s],
a is the capillary length [cm],
T is the temperature [°K],
M is the gas molecular weight [g/mole] from ANSI N14.5, Table B1 [7.3.8],

u is the fluid viscosity for helium [cP] from Rosenhow and Hartnett [7.3.9]
P_u is the upstream pressure [ATM],
P_d is the downstream pressure [ATM], and
P_a is the average pressure; $P_a = (P_u + P_d)/2$ [ATM].
D is the capillary diameter [cm].

The capillary diameter (D) computed from the above equation is equal to 4.96×10^{-4} cm.

Using the capillary diameter determined above, and the parameters for accident conditions provided in Table 7.3.6, Equation 7-3 was solved for the leakage rate at the upstream conditions. The resultant hypothetical accident leakage rate, 1.95×10^{-5} cm^3/s (at 843 K, 16.31 ATM) was calculated.

7.3.3.2 Percentage of Nuclides that Remain Airborne

In addition to the small fraction of fines that are released in the event of a cladding breach, only about 10% of the fines released to the MPC cavity remain airborne long enough to be available for release from the cask MPC [7.3.11]. It is conservatively assumed that 100% of the volatiles, crud and gases remain airborne and available for release.

7.3.3.3 Fraction of Volume Released

The minimum free volume of each MPC design the confinement vessel is presented in Table 4.4.14, 4.4.13, 4.4.24, and 4.4.25. Using conservatively reduced values of these volumes and the upstream hypothetical accident leakage rate of 1.25×10^{-5} cm^3/s, the fraction of the volume released per second is calculated. For the analysis of the MPC-24 and MPC-24E, the smaller of the two minimum free volumes was conservatively chosen.

7.3.3.4 Release Fraction

The release fraction is that portion of the total radionuclide inventory that is released from the cladding to the MPC cavity. The release fractions provided in NUREG/CR-6487 [7.3.2] are used. A summary of the release fractions is provided in Table 7.3.1.

7.3.3.5 Radionuclide Release Rate

The radionuclide release rate is the product of the quantity of isotopes available for release, the number of assemblies, the percentage of nuclides that remain airborne, the fraction of volume released, and the release fraction.

7.3.3.6 Atmospheric Dispersion Factor

The short-term accident condition atmospheric dispersion factor at 100 meters was determined using Regulatory Guide 1.145 [7.3.4]. In accordance with NUREG-1536 [7.0.2], the dispersion factor was determined on the basis of F-stability diffusion, a wind speed of 1 m/s, and plume meandering.

Reg Guide 1.145 [7.3.4] specifies that χ/Q be calculated using the following three equations. The values determined using Equations 7-4 and 7-5 should be compared and the higher value selected. This value should be compared with the value determined using Equation 7-6, and the lower value of these two should be selected as the appropriate χ/Q value. This methodology was used to determine the value for χ/Q.

Equation 7-4

$$\frac{\chi}{Q} = \frac{1}{U(\pi \sigma_y \sigma_z + A/2)}$$

Equation 7-5

$$\frac{\chi}{Q} = \frac{1}{U(3\pi \sigma_y \sigma_z)}$$

Equation 7-6

$$\frac{\chi}{Q} = \frac{1}{U \pi \Sigma_y \sigma_z}$$

where:

χ/Q	is relative concentration, in sec/m^3,
π	is 3.14159,
U	is windspeed at 10 meters above plant grade, in m/sec,
σ_y	is lateral plume spread, in meters, a function of atmospheric stability and distance (Figure 1, Reg Guide 1.145 [7.3.4]),
σ_z	is vertical plume spread, in meters, a function of atmospheric stability and distance (Figure 2, Reg Guide 1.145 [7.3.4]),
Σ_y	is lateral plume spread with meander and building wake effects, in m, = M σ_y, where M is determined from Figure 3, Reg Guide 1.145 [7.3.4], and
A	is the smallest vertical-plane cross-sectional area of the structure (cross section of the MPC), m^2.

Equations 7-4 through 7-6 were solved using the parameters presented in Table 7.3.5. The atmospheric dispersion factor, χ/Q, at 100 meters was selected in accordance with the methodology described above. The χ/Q value used to determine the dose is 8.0×10^{-3} sec/m^3. This short term accident condition χ/Q is deemed conservative for an accident evaluation period of 30 days.

7.3.3.7 Dose Conversion Factors

Dose Conversion Factors (DCF) from EPA Federal Guidance Report No. 11, Table 2.1 [7.3.5] and EPA Federal Guidance Report No. 12, Table III.1 [7.3.6] were used for the analysis. The DCFs are provided on the spread sheets included as Appendix 7.A.

7.3.3.8 Occupancy Time

An occupancy time of 720 hours (30 days) is used for the analysis [7.0.2]. This conservatively assumes that the individual is exposed 24 hours per day for 30 days at the minimum controlled area boundary of 100 meters. The accident event duration is considered conservative as any accident condition of storage resulting in the failure of 100% of the stored fuel rods would be detected by the routine security and surveillance inspections and corrective actions would be completed prior to the end of this 30-day period.

7.3.3.9 Breathing Rate

A breathing rate of 3.3×10^{-4} m^3/sec for a worker is used for the analysis [7.0.2]. This assumption is in accordance with the guidance provided in NUREG-1536 [7.0.2] for a worker.

7.3.4 Postulated Accident Doses

The following doses to an individual at the site boundary (100 meters) as a result of an assumed effluent release under accident conditions of storage were determined; the committed dose equivalent (CDE) from inhalation and the deep dose equivalent (DDE) from submersion for critical organs and tissues (gonad, breast, lung, red marrow, bone surface, thyroid); the committed effective dose equivalent (CEDE) from inhalation and the deep dose equivalent (DDE) from submersion for the whole body; the lens dose equivalent (LDE) for the lens of the eye; the shallow dose equivalent (SDE) from submersion for the skin; and the resulting Total Effective Dose Equivalent (TEDE) and Total Organ Dose Equivalent (TODE). These doses are determined for each type of MPC. The postulated doses as a result of exposure to soil with ground surface contamination and soil contaminated to a depth of 15 cm were also determined. The resultant doses were negligible compared to the those resulting from submersion in the plume and are therefore not reported.

The doses were determined using spreadsheet software. The resultant doses are summarized for each MPC type in Tables 7.3.2 through Table 7.3.5 of the HI-STORM FSAR. Example spread sheets used for the dose estimates are presented in Appendix 7.A.

7.3.4.1 Whole Body Dose (Total Effective Dose Equivalent)

The Total Effective Dose Equivalent is the sum of the inhaled committed effective dose equivalent (CEDE) from inhalation and the deep dose equivalent (DDE) to the whole body from submersion in the plume. The postulated doses were determined using spreadsheet software. Example spread sheets are provided in Appendix 7.A.

The CEDE is the product of radionuclide release rate, the atmospheric dispersion factor, the occupancy time, the breathing rate, and the effective dose conversion factor. The deep dose equivalent to the whole body from submersion is the product of the nuclide release rate, the atmospheric dispersion factor, the occupancy time, and the effective dose conversion factor.

7.3.4.2 Critical Organ Dose

The dose to the critical organ (or tissue) is the sum of the committed dose equivalent to the critical organ or tissue from inhalation and the deep dose equivalent to the organ or tissue from submersion in the plume. The postulated doses as a result of exposure to soil with ground surface contamination and soil contaminated to a depth of 15 cm were also determined. The resultant doses were negligible compared to the those resulting from submersion in the plume and are therefore not reported.

The committed dose equivalent to the organ or tissue from inhalation is the product of radionuclide release rate, the atmospheric dispersion factor, the occupancy time, the breathing rate, and the organ/tissue dose conversion factor. The deep dose equivalent to the organ or tissue from submersion in the plume is the product of the nuclide release rate, the atmospheric dispersion factor, the occupancy time, and the organ/tissue dose conversion factor.

The lens dose equivalent (LDE) as a result of submersion in the plume was estimated using guidance from Dr. James Turner in his book, *Atoms, Radiation, and Radiation Protection* [7.3.10]. Dr. Turner states that alpha particles and low-energy beta particles, such as those from tritium, cannot penetrate to the lens of the eye (at a depth of 3 mm). The discussion continues that many noble gases emit photons and energetic beta particles, which in turn must be considered in the dose estimate. Dr. Turner states that the dose-equivalent rate to tissues near the surface of the body (e.g., lens of the eye) is more than 130 times the dose-equivalent rate in the lung from gases contained in the lung. Using the accident condition of storage for the MPC-68 and the MPC-32 (which have the highest dose to the lung for BWR and PWR fuel respectively), the estimated dose to the lung from gases in the lung is 3.60×10^{-3} mrem and 4.88×10^{-3} mrem, respectively. Conservatively multiplying this value by 150, the estimated LDE is 0.540 mrem for BWR fuel and 0.732 mrem for PWR fuel. These estimated LDEs for BWR and PWR fuel are a small fraction of the 15 rem limit imposed by 10CFR72.106(b).

7.3.5 Site Boundary

The estimated accident doses at the controlled area boundary are highest for the accident condition of storage for the MPC-68 for BWR fuel and the MPC-32 for PWR fuel. The estimated TEDEs (39.2mrem for BWR fuel and 29.1 mrem for PWR fuel) are small fractions of the 5 rem whole body limit imposed by 10 CFR 72.106(b). The maximum estimated Total Organ Dose Equivalents (TODE) to the lung and bone surface, which are the highest critical organ doses to BWR and PWR fuel, respectively, (205 mrem and 233 mrem, respectively) are small fractions of the 50 rem critical organ limit imposed by 10 CFR 72.106(b). Additionally, the shallow dose equivalents to the skin (0.303 mrem and 0.202 mrem) are small fractions of the 50 rem shallow dose equivalent to skin or

other extremity limit imposed by 10 CFR 72.106(b).

7.3.6 Assumptions

The following presents a summary of assumptions for the accident condition confinement analysis of the HI-STORM 100 System.

- The distance from the cask to the site boundary is 100 meters.
- 100% of the fuel rods have ruptured. This assumption is conservative because it results in the greatest potential release of radioactive material.
- Unchoked flow correlations were used as the unchoked flow correlations better approximate the true measured flowrate for the leakage rates associated with transportation packages.
- For conservatism, the upstream pressure at reference test conditions (inside of the MPC) is assumed to be *2 ATM* and the down stream pressure (outside of the MPC) is assumed to be 1 ATM.
- The leak hole diameter is determined using reference test conditions rather than actual test conditions from Table 7.3.7. This is conservative, as it yields a larger leak hole diameter.
- The temperature at test conditions is assumed to be equal to an ambient reference temperature, 212° F based on the maximum temperature achievable by the water in the MPC during performance of the leak test. This is conservative because the leak hole diameter computed from test conditions is larger.
- Bounding accident conditions (i.e., MPC cavity pressure of 225 psig (which is above the design pressure of 200 psig) at peak cladding temperature limit (570° C)) are postulated for this analysis.
- The capillary length required for Equation 7-3 was conservatively chosen to be the MPC lid closure weld which is 1.9 cm.
- The majority of the activity associated with crud is due to ^{60}Co. This assumption follows from the discussion provided in NUREG/CR-6487 [7.3.2].
- The accident condition leakage rate persists for 30 days without a decrease in the rate or nuclide concentration.
- The individual at the site boundary is exposed for 720 hours (30 days). This conservatively assumes that the individual is exposed 24 hours per day for 30 days.
- A breathing rate of 3.3×10^{-4} m^3/sec for a worker is used for the analysis [7.0.2]. This

assumption is in accordance with the guidance provided in NUREG-1536 for a worker.

- All fuel stored in the MPC is of the design basis type with a bounding burnup and cooling time.

- Exposure to dose conversion factors for inhalation reported in EPA Federal Guidance Report No. 11, Table 2.1 [7.3.5] were selected by the most restrictive clearance class for each organ and each radionuclide.

- For conservativism, the maximum possible leakage rate at reference test conditions is assumed to be 7.5×10^{-6} atm-cm^3/s, which is 150% of the test leak rate of 5.0×10^{-6} atm-cm^3/s.

Table 7.3.1
Isotope Inventory and Release Fraction

Nuclide	MPC-24 MPC-24E MPC-24EF MPC-32 Ci/Assembly	MPC-68 MPC-68FF Ci/Assembly	MPC-68F Ci/Assembly	Release Fraction [7.3.2]
Gases				
^{3}H	3.68E+02	1.24E+02	1.78E+01	0.30
^{129}I	3.31E-02	1.12E-02	3.49E-03	0.30
^{85}Kr	5.86E+03	2.04E+03	2.37E+02	0.30
Crud				
^{60}Co	2.18E+01	6.50E+01	1.18E+01	0.15 normal/off-normal 1.0 accident
Volatiles				
^{90}Sr	6.32E+04	2.24E+04	4.29E+03	2.0E-04
^{106}Ru	1.59E+04	4.71E+03	2.30E-01	2.0E-04
^{134}Cs	4.04E+04	1.18E+04	3.16E+01	2.0E-04
^{137}Cs	9.82E+04	3.35E+04	7.21E+03	2.0E-04
Fines				
^{241}Pu	8.53E+04	2.58E+04	5.16E+03	3.0 E-05
^{90}Y	6.32E+04	2.24E+04	4.29E+03	3.0 E-05
^{147}Pm	2.63E+04	9.63E+03	1.18E+02	3.0 E-05
^{144}Ce	8.14E+03	2.48E+03	--	3.0 E-05
^{144}Pr	8.14E+03	2.48E+03	--	3.0 E-05
^{154}Eu	5.90E+03	1.74E+03	1.44E+02	3.0 E-05
^{244}Cm	1.01+04	2.38E+03	2.17E+02	3.0 E-05
^{238}Pu	5.81E+03	1.58E+03	2.50E+02	3.0 E-05
^{125}Sb	2.30E+03	7.91E+02	--	3.0 E-05
^{155}Eu	1.65E+03	5.41E+02	--	3.0 E-05

Table 7.3.1
(continued)

Isotope Inventory and Release Fractions

Nuclide	MPC-24 *MPC-24E* *MPC-24EF* *MPC-32* Ci/Assembly	MPC-68 *MPC-68FF* Ci/Assembly	MPC-68F Ci/Assembly	Release Fraction [7.3.2]
^{241}Am	9.00E+02	2.78E+02	2.52E+02	3.0 E-05
^{125m}Te	5.61E+02	1.93E+02	--	3.0 E-05
^{240}Pu	4.05E+02	1.50E+02	6.81E+01	3.0 E-05
^{151}Sm	3.38E+02	9.76E+01	--	3.0 E-05
^{239}Pu	2.04E+02	6.70E+01	2.95E+01	3.0 E-05
^{137m}Ba	9.27E+04	3.17E+04	6.81E+03	3.0 E-05
^{106}Rh	1.59E+04	4.71E+03	--	3.0 E-05
^{144m}Pr	1.14E+02	3.48E+01	--	3.0 E-05
^{243}Am	4.87E+01	1.36E+01	3.30E+00	3.0 E-05
^{242}Cm	3.23E+01	9.82E+00	7.71E-01	3.0 E-05
^{243}Cm	3.63E+01	9.79E+00	1.54E+00	3.0 E-05
^{239}Np	4.87E+01	1.36E+01	3.30E+00	3.0 E-05
^{237}Np	3.88E-01	1.18E-01	2.72E-02	3.0 E-05
^{242}Pu	2.85E+00	9.04E-01	3.06E-01	3.0 E-05
^{242}Am	8.72E+00	2.71E+00	9.31E-01	3.0 E-05
^{242m}Am	8.76E+00	2.72E+00	9.35E-01	3.0 E-05

Note: The isotopes which contribute greater than 0.1% to the total curie inventory for the fuel assembly are considered in the evaluation as fines. The analysis also includes actinides as the dose conversion factors for these isotopes are in general, orders of magnitude greater than other isotopes (e.g., isotopes of plutonium, americium, curium, and neptunium were included regardless of their contribution to the inventory).

Table 7.3.2

MPC-24, MPC-24E and MPC-24EF
Postulated Doses
To An Individual at the Controlled Area Boundary (100 meters)
As a Result of an Assumed Effluent Release
Normal Conditions [mrem/yr]

	Gonad	Breast	Lung	Red Marrow	Bone Surface	Thyroid
CDE	1.47E-02	1.76E-02	5.98E-01	9.04E-02	6.53E-01	1.59E-02
DDE	3.31E-04	3.74E-04	3.33E-04	3.30E-04	4.83E-04	3.42E-04
ADE	1.50E-02	1.80E-02	5.98E-01	9.07E-02	6.53E-01	1.62E-02

	Skin/Extremity
SDE	8.48E-04

	Whole Body
CEDE	1.16E-01
DDE	3.39E-04
ADE	1.16E-01

Off-Normal Conditions [mrem/yr]

	Gonad	Breast	Lung	Red Marrow	Bone Surface	Thyroid
CDE	5.33E-02	2.51E-02	1.70E+00	3.64E-01	2.96E+00	2.38E-02
DDE	3.88E-04	4.40E-04	3.90E-04	3.86E-04	5.80E-04	4.00E-04
ADE	5.37E-02	2.55E-02	1.70E+00	3.64E-01	2.96E+00	2.42E-02

	Skin/Extremity
SDE	2.56E-03

	Whole Body
CEDE	3.52E-01
DDE	3.98E-04
ADE	3.52E-01

Accident Conditions [mrem/30 days]

	Gonad	Breast	Lung	Red Marrow	Bone Surface	Thyroid
CDE	3.27E+00	1.34E+00	1.02E+02	2.25E+01	1.84E+02	1.29E+00
DDE	1.96E-02	2.22E-02	1.97E-02	1.95E-02	2.95E-02	2.02E-02
ADE	3.29E+00	1.36E+00	1.02E+02	2.25E+01	1.84E+02	1.31E+00

	Skin/Extremity
SDE	1.54E-01

	Whole Body
CEDE	2.12E+01
DDE	2.01E-02
ADE	2.12E+01

Table 7.3.3

MPC-32
Postulated Doses
To An Individual at the Controlled Area Boundary (100 meters)
As a Result of an Assumed Effluent Release

Normal Conditions [mrem/yr]

	Gonad	Breast	Lung	Red Marrow	Bone Surface	Thyroid
CDE	2.03E-02	2.43E-02	8.24E-01	1.25E-01	8.99E-01	2.19E-02
DDE	4.56E-04	5.16E-04	4.59E-04	4.55E-04	6.65E-04	4.71E-04
ADE	2.08E-02	2.48E-02	8.24E-01	1.25E-01	9.00E-01	2.24E-02

	Skin/Extremity
SDE	1.17E-03

	Whole Body
CEDE	1.59E-01
DDE	4.67E-04
ADE	1.59E-01

Off-Normal Conditions [mrem/yr]

	Gonad	Breast	Lung	Red Marrow	Bone Surface	Thyroid
CDE	7.34E-02	3.46E-02	2.34E+00	5.01E-01	4.08E+00	3.28E-02
DDE	5.35E-04	6.06E-04	5.38E-04	5.31E-04	7.99E-04	5.51E-04
ADE	7.39E-02	3.52E-02	2.34E+00	5.02E-01	4.08E+00	3.34E-02

	Skin/Extremity
SDE	3.53E-03

	Whole Body
CEDE	4.85E-01
DDE	5.48E-04
ADE	4.86E-01

Accident Conditions [mrem/30 days]

	Gonad	Breast	Lung	Red Marrow	Bone Surface	Thyroid
CDE	4.49E+00	1.84E+00	1.40E+02	3.09E+01	2.54E+02	1.77E+00
DDE	2.70E-02	3.06E-02	2.71E-02	2.68E-02	4.06E-02	2.78E-02
ADE	4.52E+00	1.87E+00	1.40E+02	3.09E+01	2.54E+02	1.80E+00

	Skin/Extremity
SDE	2.12E-01

	Whole Body
CEDE	2.91E+01
DDE	2.76E-02
ADE	2.91E+01

Table 7.3.4
MPC-68 and MPC-68FF
Postulated Doses
To An Individual at the Controlled Area Boundary (100 meters)
As a Result of an Assumed Effluent Release

Normal Conditions [mrem/yr]

	Gonad	Breast	Lung	Red Marrow	Bone Surface	Thyroid
CDE	4.54E-02	1.42E-01	2.95E+00	2.00E-01	6.37E-01	1.26E-01
DDE	2.86E-03	3.23E-03	2.88E-03	2.86E-03	4.14E-03	2.95E-03
ADE	4.83E-02	1.45E-01	2.95E+00	2.03E-01	6.41E-01	1.29E-01

	Skin/Extremity
SDE	3.85E-03

	Whole Body
CEDE	5.12E-01
DDE	2.93E-03
ADE	5.15E-01

Off-Normal Conditions [mrem/yr]

	Gonad	Breast	Lung	Red Marrow	Bone Surface	Thyroid
CDE	7.81E-02	1.50E-01	4.07E+00	4.48E-01	2.56E+00	1.33E-01
DDE	2.91E-03	3.29E-03	2.93E-03	2.91E-03	4.23E-03	3.01E-03
ADE	8.10E-02	1.53E-01	4.07E+00	4.51E-01	2.56E+00	1.36E-01

	Skin/Extremity
SDE	5.65E-03

	Whole Body
CEDE	7.32E-01
DDE	2.98E-03
ADE	7.35E-01

Accident Conditions [mrem/30 days]

	Gonad	Breast	Lung	Red Marrow	Bone Surface	Thyroid
CDE	4.34E+00	7.29E+00	2.16E+02	2.60E+01	1.58E+02	6.52E+00
DDE	1.40E-01	1.58E-01	1.41E-01	1.40E-01	2.04E-01	1.45E-01
ADE	4.48E+00	7.45E+00	2.16E+02	2.61E+01	1.58E+02	6.67E+00

	Skin/Extremity
SDE	3.03E-01

	Whole Body
CEDE	3.91E+01
DDE	1.44E-01
ADE	3.92E+01

Table 7.3.5

MPC-68F
Postulated Doses
To An Individual at the Controlled Area Boundary (100 meters)
As a Result of an Assumed Effluent Release

Normal Conditions [mrem/yr]

	Gonad	Breast	Lung	Red Marrow	Bone Surface	Thyroid
CDE	7.31E-03	2.56E-02	5.00E-01	2.94E-02	6.38E-01	2.25E-02
DDE	5.16E-04	5.84E-04	5.21E-04	5.16E-04	7.47E-04	5.33E-04
ADE	7.83E-03	2.62E-02	5.01E-01	2.99E-02	6.39E-01	2.30E-02

	Skin/Extremity
SDE	6.31E-04

	Whole Body
CEDE	8.65E-02
DDE	5.29E-04
ADE	8.70E-02

Off-Normal Conditions [mrem/yr]

	Gonad	Breast	Lung	Red Marrow	Bone Surface	Thyroid
CDE	1.37E-02	2.66E-02	7.03E-01	7.95E-02	4.70E-01	2.35E-02
DDE	5.18E-04	5.86E-04	5.23E-04	5.18E-04	7.51E-04	5.35E-04
ADE	1.42E-02	2.72E-02	7.04E-01	8.00E-02	4.71E-01	2.40E-02

	Skin/Extremity
SDE	8.36E-04

	Whole Body
CEDE	1.29E-01
DDE	5.31E-04
ADE	1.30E-01

Accident Conditions [mrem/30 days]

	Gonad	Breast	Lung	Red Marrow	Bone Surface	Thyroid
CDE	8.26E-01	1.29E+00	3.89E+01	5.12E+00	3.32E+01	1.15E+00
DDE	2.48E-02	2.80E-02	2.50E-02	2.48E-02	3.59E-02	2.56E-02
ADE	8.51E-01	1.32E+00	3.89E+01	5.14E+00	3.32E+01	1.18E+00

	Skin/Extremity
SDE	4.53E-02

	Whole Body
CEDE	7.26E+00
DDE	2.54E-02
ADE	7.29E+00

Table 7.3.6
χ/Q Parameters

Parameter	Value	Reference
U	1 m/s	NUREG-1536 [7.0.2]
σ_y	4.0 m	Figure 1, Reg Guide 1.145 [7.3.4]
σ_z	2.5 m	Figure 2, Reg Guide 1.145 [7.3.4]
$\Sigma_y = M\,\sigma_y$	16	M is determined from Figure 3, Reg Guide 1.145 [7.3.4]
A	8.41 m^2	Chapter 1, Section 1.5

Table 7.3.7

Parameters for Test, Normal/Off-Normal and Hypothetical Accident Conditions

Parameter	Reference Test	Actual Test	Normal/Off-Normal[1]	Hypothetical Accident
P_u	2 ATM (min)	6.78 ATM (min)	6.90 ATM	16.31 ATM
P_d	1 ATM	1 ATM	1 ATM	1 ATM
T	373 K	373 K	581 K	843 K
M	4 g/mol	4 g/mol	4 g/mol	4 g/mol
u (helium)	0.0231 cP	0.0231 cP	0.0309 cP	0.0397 cP
a	1.9 cm	1.9 cm	1.9 cm	1.9 cm

[1] *The values in this column are for the off-normal condition. They uniformly bound the normal condition values.*

Table 7.3.8

Postulated Bounding Doses Compared to Regulatory Limits
To An Individual at the Controlled Area Boundary (100 meters)
As a Result of an Assumed Effluent Release

	BWR	PWR	Regulatory Limit
10CFR72.104(a) - Normal			
Whole body ADE	0.515 mrem	0.159 mrem	25 mrem
Thyroid ADE	0.129 mrem	0.022 mrem	75 mrem
Critical Organ ADE (Max)	2.95 mrem	0.900 mrem	25mrem
10CFR72.104(a) - Off-normal			
Whole body ADE	0.735 mrem	0.486 mrem	25 mrem
Thyroid ADE	0.136 mrem	0.033 mrem	75 mrem
Critical Organ ADE (Max)	4.07 mrem	4.08 mrem	25mrem
10CFR72.106(b) - Accident			
TEDE	39.2 mrem	29.1 mrem	5 rem
TODE=DDE+CDE (Max)	216 mrem	254 mrem	50 rem
LDE	0.540 mrem	0.732 mrem	15 rem
SDE	0.303 mrem	0.212 mrem	50 rem

ADE: Annual Dose Equivalent
TEDE: Total Effective Dose Equivalent
TODE: Total Organ Dose Equivalent
DDE: Deep Dose Equivalent
CDE: Committed Dose Equivalent
LDE: Lens Dose Equivalent
SDE: Shallow Dose Equivalent

7.4 REFERENCES

[7.0.1] 10CFR72, Licensing Requirements for the Independent Storage of Spent Nuclear Fuel and High-Level Radioactive Waste.

[7.0.2] NUREG-1536, "Standard Review Plan for Dry Cask Storage Systems", January, 1997.

[7.1.1] American Society of Mechanical Engineers (ASME), Boiler and Pressure Vessel Code, Section III, Division 1, Subsection NB, Class 1 Components, 1995 Edition.

[7.2.1] Interim Staff Guidance-11, Revision 1, "Transportation and Storage of Spent Fuel Having Burnups in Excess of 45GWD/MTU", May 16, 2000.

[7.2.2] Interim Staff Guidance-5, Revision 1, "Normal, Off-Normal, and Hypothetical Dose Estimate Calculations", June 18, 1999.

[7.3.1] Deleted.

[7.3.2] Anderson, B.L. et al. *Containment Analysis for Type B Packages Used to Transport Various Contents.* NUREG/CR-6487, UCRL-ID-124822. Lawrence Livermore National Laboratory, November 1996.

[7.3.3] Shleien, B, *The Health Physics and Radiological Health Handbook*, Scinta, Inc. Silver Spring, MD, 1992.

[7.3.4] U.S. Nuclear Regulatory Commission, "Atmospheric Dispersement Models for Potential Accident Consequence Assessments at Nuclear Power Plants," Regulatory Guide 1.145, February 1989.

[7.3.5] U.S. EPA, Federal Guidance Report No. 11, *Limiting Values of Radionuclide Intake and Air Concentration and Dose Conversion Factors for Inhalation, Submersion, and Ingestion*, DE89-011065, 1988.

[7.3.6] U.S. EPA, Federal Guidance Report No. 12, *External Exposure to Radionuclides in Air, Water, and Soil*, EPA 402-R-93-081, 1993.

[7.3.7] International Commission on Radiological Protection, Limits for Intakes of Radionuclides by Workers, ICRP Publication 30, Part 1; Pergamon Press; Oxford; 1978.

[7.3.8] ANSI N14.5-1997. "American National Standard for Radioactive

Material Leakage Tests on Packages for Shipment."

[7.3.9] Rosenhow, W.M.. and Hartnett, J.P., *Handbook of Heat Transfer*, McGraw Hill Book Company, New York, 1973.

[7.3.10] Turner, James E. *Atoms, Radiation , and Radiation Protection*, McGraw Hill Book Company, New York, 1992.

[7.3.11] Rashid, Y.R., et al, "An Estimate of the Contribution of Spent Fuel Products to the Releaseable Source Term in Spent Fuel Transportation Casks," SAND88-2778C, Sandia National Laboratories, 1988

APPENDIX 7.A

EXAMPLE DOSE CALCULATIONS FOR NORMAL, OFF -NORMAL, AND ACCIDENT CONDITIONS OF STORAGE

MPC-32, Normal Conditions of Storage, Dose from Inhalation: 7 pages
MPC-32, Off-Normal Conditions of Storage, Dose from Inhalation: 7 pages
MPC-32, Accident Conditions of Sto rage, Dose from Inhalation: 7 pages

MPC-32, Normal Conditions of Storage, Dose from Submersion: 8 pages
MPC-32, Off-Normal Conditions of Storage, Dose from Submersion: 8 pages
MPC-32, Accident Conditions of Storage, Dose from Submersion: 8 pages

MPC-68, Normal Conditions of Storage, Dose from Inhalation: 7 pages
MPC-68, Off-Normal Conditions of Storage, Dose from Inhalation: 7 pages
MPC-68, Accident Conditions of Storage, Dose from Inhalation: 7 pages

MPC-68, Normal Conditions of Storage, Dose from Su bmersion: 8 pages
MPC-68, Off-Normal Conditions of Storage, Dose from Submersion: 8 pages
MPC-68, Accident Conditions of Storage, Dose from Submersion: 8 pages

MPC-32															
Normal Conditions															
Committed Effective Dose Equivalent From Inhalation															
Nuclide	Inventory (Ci/Assy)	% available for release	% remain airborne	No. Assy	MPC Vol (cm3)	L_{nor} Rate at Upstream (cm3/s)	Fraction Released per sec	Release Fraction	Release Rate (Ci/sec)	X/Q (sec/m3)	Breathing Rate (m3/sec)	DCF (Sv/Bq)	DCF (mRem/uCi)	Occupancy Time (sec)	CDE (mRem)
Gases															
H 3	3 68E+02	2 5%	100%	32	6.19E+06	1.12E-05	1 81E-12	0 30	1 60E-10	1 60E-04	3.30E-04	1.73E-11	6 40E-02	3.15E+07	1.70E-05
I129	3 31E-02	2 5%	100%	32	6.19E+06	1.12E-05	1 81E-12	0.30	1.44E-14	1 60E-04	3.30E-04	8 69E-11	3 22E-01	3 15E+07	7 69E-09
KR 85	5 86E+03	2 5%	100%	32	6.19E+06	1.12E-05	1 81E-12	0 30	2 55E-09	1 60E-04	3 30E-04	0.00E+00	0 00E+00	3.15E+07	0 00E+00
Crud															
Co-60	2 18E+01	100 0%	100%	32	6 19E+06	1.12E-05	1 81E-12	0.15	1.89E-10	1 60E-04	3 30E-04	4.76E-09	1.76E+01	3 15E+07	5 54E-03
Volatiles															
SR 90	6 32E+04	2 5%	100%	32	6 19E+06	1.12E-05	1.81E-12	2 00E-04	1.83E-11	1 60E-04	3 30E-04	2.64E-09	9 77E+00	3.15E+07	2 97E-04
RU106	1 59E+04	2 5%	100%	32	6.19E+06	1.12E-05	1.81E-12	2 00E-04	4.61E-12	1 60E-04	3 30E-04	1.38E-08	5.11E+01	3.15E+07	3.91E-04
CS134	4 04E+04	2.5%	100%	32	6.19E+06	1.12E-05	1 81E-12	2.00E-04	1.17E-11	1 60E-04	3.30E-04	1.30E-08	4.81E+01	3.15E+07	9 36E-04
CS137	9.82E+04	2 5%	100%	32	6.19E+06	1.12E-05	1 81E-12	2 00E-04	2 84E-11	1 60E-04	3 30E-04	8.76E-09	3.24E+01	3.15E+07	1.53E-03
Fines															
PU241	8 53E+04	2 5%	10%	32	6 19E+06	1.12E-05	1 81E-12	3 00E-05	3.71E-13	1 60E-04	3 30E-04	6 82E-07	2 52E+03	3 15E+07	1.56E-03
Y 90	6.32E+04	2 5%	10%	32	6 19E+06	1.12E-05	1.81E-12	3 00E-05	2.75E-13	1 60E-04	3 30E-04	9 52E-12	3.52E-02	3 15E+07	1 61E-08
PM147	2.63E+04	2 5%	10%	32	6.19E+06	1.12E-05	1 81E-12	3 00E-05	1 14E-13	1 60E-04	3.30E-04	1 88E-14	6 96E-05	3.15E+07	1 32E-11
CE144	8 14E+03	2.5%	10%	32	6 19E+06	1.12E-05	1 81E-12	3 00E-05	3.54E-14	1 60E-04	3 30E-04	1.93E-09	7.14E+00	3 15E+07	4 20E-07
PR144	8 14E+03	2 5%	10%	32	6.19E+06	1 12E-05	1.81E-12	3 00E-05	3 54E-14	1 60E-04	3 30E-04	2 41E-15	8.92E-06	3.15E+07	5 25E-13
EU154	5 90E+03	2 5%	10%	32	6.19E+06	1.12E-05	1 81E-12	3 00E-05	2.56E-14	1.60E-04	3 30E-04	1.17E-08	4 33E+01	3.15E+07	1 85E-06
CM244	1 01E+04	2 5%	10%	32	6.19E+06	1 12E-05	1 81E-12	3 00E-05	4.39E-14	1 60E-04	3 30E-04	1.59E-05	5.88E+04	3 15E+07	4 29E-03
PU238	5 81E+03	2.5%	10%	32	6 19E+06	1.12E-05	1 81E-12	3 00E-05	2.52E-14	1.60E-04	3.30E-04	2.80E-05	1 04E+05	3.15E+07	4.35E-03
SB125	2 30E+03	2 5%	10%	32	6 19E+06	1.12E-05	1 81E-12	3 00E-05	9.99E-15	1 60E-04	3.30E-04	3 60E-10	1 33E+00	3.15E+07	2 21E-08
EU155	1.65E+03	2 5%	10%	32	6.19E+06	1.12E-05	1 81E-12	3 00E-05	7.17E-15	1.60E-04	3.30E-04	3 56E-10	1.32E+00	3.15E+07	1 57E-08
AM241	9 00E+02	2.5%	10%	32	6 19E+06	1.12E-05	1 81E-12	3 00E-05	3.91E-15	1 60E-04	3.30E-04	3.25E-05	1.20E+05	3 15E+07	7 82E-04
TE125M	5 61E+02	2 5%	10%	32	6.19E+06	1 12E-05	1.81E-12	3 00E-05	2.44E-15	1.60E-04	3 30E-04	1.24E-10	4 59E-01	3.15E+07	1.86E-09
PU240	4 05E+02	2 5%	10%	32	6 19E+06	1 12E-05	1.81E-12	3 00E-05	1.76E-15	1 60E-04	3 30E-04	3.18E-05	1.18E+05	3.15E+07	3.44E-04
SM151	3 38E+02	2 5%	10%	32	6.19E+06	1.12E-05	1 81E-12	3 00E-05	1.47E-15	1.60E-04	3 30E-04	4 03E-14	1.49E-04	3 15E+07	3 64E-13
PU239	2 04E+02	2 5%	10%	32	6 19E+06	1.12E-05	1 81E-12	3.00E-05	8.87E-16	1 60E-04	3 30E-04	3 18E-05	1.18E+05	3.15E+07	1.73E-04
BA137M	9 27E+04	2.5%	10%	32	6.19E+06	1.12E-05	1.81E-12	3 00E-05	4.03E-13	1 60E-04	3.30E-04	0.00E+00	0 00E+00	3.15E+07	0 00E+00
RH106	1 59E+04	2 5%	10%	32	6.19E+06	1.12E-05	1 81E-12	3.00E-05	6 91E-14	1.60E-04	3 30E-04	0 00E+00	0 00E+00	3.15E+07	0 00E+00
PR144M	1.14E+02	2.5%	10%	32	6 19E+06	1.12E-05	1 81E-12	3 00E-05	4.95E-16	1 60E-04	3 30E-04	0 00E+00	0 00E+00	3 15E+07	0.00E+00
AM243	4 87E+01	2 5%	10%	32	6.19E+06	1.12E-05	1 81E-12	3 00E-05	2.12E-16	1.60E-04	3 30E-04	3 26E-05	1.21E+05	3 15E+07	4 25E-05
CM242	3 23E+01	2 5%	10%	32	6 19E+06	1.12E-05	1 81E-12	3 00E-05	1.40E-16	1 60E-04	3 30E-04	5.70E-07	2 11E+03	3.15E+07	4 92E-07
CM243	3 63E+01	2 5%	10%	32	6.19E+06	1.12E-05	1 81E-12	3.00E-05	1.58E-16	1 60E-04	3 30E-04	2 07E-05	7 66E+04	3.15E+07	2 01E-05
NP239	4 87E+01	2 5%	10%	32	6.19E+06	1.12E-05	1 81E-12	3 00E-05	2.12E-16	1 60E-04	3.30E-04	7 45E-11	2 76E-01	3 15E+07	9 70E-11
NP237	3 88E-01	2 5%	10%	32	6 19E+06	1.12E-05	1 81E-12	3 00E-05	1.69E-18	1 60E-04	3 30E-04	2.96E-05	1 10E+05	3.15E+07	3 07E-07
PU242	2 85E+00	2 5%	10%	32	6 19E+06	1.12E-05	1.81E-12	3 00E-05	1.24E-17	1 60E-04	3 30E-04	3 02E-05	1.12E+05	3 15E+07	2 30E-06
AM242	8 72E+00	2 5%	10%	32	6 19E+06	1.12E-05	1 81E-12	3 00E-05	3.79E-17	1 60E-04	3 30E-04	1 94E-09	7.18E+00	3 15E+07	4 52E-10
AM242M	8 76E+00	2.5%	10%	32	6.19E+06	1 12E-05	1.81E-12	3 00E-05	3 81E-17	1 60E-04	3 30E-04	3 21E-05	1.19E+05	3 15E+07	7.52E-06
														Total	2 03E-02

MPC-32															
Normal Conditions															
Committed Effective Dose Equivalent From Inhalation															
Nuclide	Inventory (Ci/Assy)	% available for release	% remain airborne	No Assy	MPC Vol (cm3)	L_{mw} Rate at Upstream (cm3/s)	Fraction Released per sec	Release Fraction	Release Rate (Ci/sec)	X/Q (sec/m3)	Breathing Rate (m3/sec)	DCF (Sv/Bq)	DCF (mRem/uCi)	Occupancy Time (sec)	CDE (mRem)
Gases															
H 3	3 68E+02	2.5%	100%	32	6.19E+06	1.12E-05	1.81E-12	0.30	1 60E-10	1 60E-04	3 30E-04	1.73E-11	6 40E-02	3.15E+07	1.70E-05
I129	3 31E-02	2.5%	100%	32	6.19E+06	1.12E-05	1.81E-12	0 30	1.44E-14	1.60E-04	3.30E-04	2.09E-10	7.73E-01	3.15E+07	1.85E-08
KR 85	5 86E+03	2.5%	100%	32	6.19E+06	1.12E-05	1.81E-12	0.30	2 55E-09	1.60E-04	3 30E-04	0 00E+00	0 00E+00	3.15E+07	0 00E+00
Crud															
Co-60	2.18E+01	100.0%	100%	32	6.19E+06	1.12E-05	1 81E-12	0.15	1.89E-10	1 60E-04	3 30E-04	1 84E-08	6 81E+01	3.15E+07	2.14E-02
Volatiles															
SR 90	6 32E+04	2 5%	100%	32	6.19E+06	1.12E-05	1.81E-12	2 00E-04	1 83E-11	1.60E-04	3.30E-04	2.64E-09	9.77E+00	3.15E+07	2 97E-04
RU106	1 59E+04	2.5%	100%	32	6.19E+06	1.12E-05	1.81E-12	2.00E-04	4 61E-12	1 60E-04	3.30E-04	1.37E-08	5.07E+01	3.15E+07	3 88E-04
CS134	4 04E+04	2 5%	100%	32	6.19E+06	1.12E-05	1 81E-12	2.00E-04	1.17E-11	1 60E-04	3 30E-04	1 08E-08	4.00E+01	3.15E+07	7.78E-04
CS137	9 82E+04	2 5%	100%	32	6.19E+06	1.12E-05	1.81E-12	2.00E-04	2.84E-11	1.60E-04	3.30E-04	7.84E-09	2.90E+01	3.15E+07	1.37E-03
Fines															
PU241	8 53E+04	2 5%	10%	32	6.19E+06	1.12E-05	1 81E-12	3 00E-05	3.71E-13	1.60E-04	3.30E-04	3 06E-11	1.13E-01	3.15E+07	6 98E-08
Y 90	6 32E+04	2.5%	10%	32	6.19E+06	1.12E-05	1 81E-12	3 00E-05	2.75E-13	1 60E-04	3 30E-04	9 52E-12	3 52E-02	3.15E+07	1 61E-08
PM147	2 63E+04	2.5%	10%	32	6.19E+06	1.12E-05	1.81E-12	3 00E-05	1.14E-13	1.60E-04	3.30E-04	3 60E-14	1.33E-04	3.15E+07	2.53E-11
CE144	8 14E+03	2 5%	10%	32	6.19E+06	1.12E-05	1 81E-12	3.00E-05	3 54E-14	1 60E-04	3 30E-04	1 97E-09	7.29E+00	3.15E+07	4.29E-07
PR144	8 14E+03	2 5%	10%	32	6.19E+06	1.12E-05	1 81E-12	3 00E-05	3.54E-14	1 60E-04	3 30E-04	1 05E-14	3 89E-05	3.15E+07	2 29E-12
EU154	5 90E+03	2 5%	10%	32	6.19E+06	1.12E-05	1.81E-12	3 00E-05	2 56E-14	1.60E-04	3 30E-04	1.55E-08	5.74E+01	3.15E+07	2.45E-06
CM244	1 01E+04	2 5%	10%	32	6.19E+06	1.12E-05	1.81E-12	3 00E-05	4.39E-14	1.60E-04	3.30E-04	1.04E-09	3.85E+00	3.15E+07	2.81E-07
PU238	5 81E+03	2 5%	10%	32	6.19E+06	1 12E-05	1 81E-12	3.00E-05	2.52E-14	1 60E-04	3 30E-04	1 00E-09	3 70E+00	3.15E+07	1 55E-07
SB125	2.30E+03	2 5%	10%	32	6.19E+06	1.12E-05	1.81E-12	3 00E-05	9.99E-15	1.60E-04	3 30E-04	4.16E-10	1.54E+00	3.15E+07	2 56E-08
EU155	1 65E+03	2 5%	10%	32	6.19E+06	1.12E-05	1.81E-12	3 00E-05	7.17E-15	1 60E-04	3.30E-04	6.14E-10	2.27E+00	3.15E+07	2.71E-08
AM241	9 00E+02	2 5%	10%	32	6.19E+06	1.12E-05	1.81E-12	3 00E-05	3.91E-15	1.60E-04	3.30E-04	2.67E-09	9 88E+00	3.15E+07	6 43E-08
TE125M	5 61E+02	2.5%	10%	32	6.19E+06	1.12E-05	1.81E-12	3 00E-05	2 44E-15	1 60E-04	3.30E-04	1.07E-10	3.96E-01	3.15E+07	1.60E-09
PU240	4 05E+02	2 5%	10%	32	6.19E+06	1.12E-05	1 81E-12	3 00E-05	1.76E-15	1.60E-04	3.30E-04	9.51E-10	3.52E+00	3.15E+07	1.03E-08
SM151	3 38E+02	2.5%	10%	32	6.19E+06	1.12E-05	1.81E-12	3 00E-05	1.47E-15	1 60E-04	3.30E-04	1.49E-13	5.51E-04	3.15E+07	1.35E-12
PU239	2 04E+02	2.5%	10%	32	6.19E+06	1.12E-05	1.81E-12	3 00E-05	8.87E-16	1.60E-04	3 30E-04	9.22E-10	3.41E+00	3.15E+07	5 03E-09
BA137M	9 27E+04	2.5%	10%	32	6.19E+06	1.12E-05	1.81E-12	3 00E-05	4.03E-13	1 60E-04	3 30E-04	0 00E+00	0 00E+00	3.15E+07	0 00E+00
RH106	1 59E+04	2 5%	10%	32	6.19E+06	1.12E-05	1 81E-12	3 00E-05	6.91E-14	1 60E-04	3 30E-04	0 00E+00	0 00E+00	3.15E+07	0 00E+00
PR144M	1.14E+02	2 5%	10%	32	6 19E+06	1.12E-05	1 81E-12	3 00E-05	4.95E-16	1.60E-04	3 30E-04	0 00E+00	0.00E+00	3.15E+07	0 00E+00
AM243	4.87E+01	2 5%	10%	32	6.19E+06	1.12E-05	1.81E-12	3 00E-05	2.12E-16	1.60E-04	3 30E-04	1 52E-08	5 62E+01	3.15E+07	1 98E-08
CM242	3 23E+01	2.5%	10%	32	6 19E+06	1.12E-05	1.81E-12	3 00E-05	1 40E-16	1 60E-04	3.30E-04	9.44E-10	3 49E+00	3.15E+07	8 15E-10
CM243	3 63E+01	2.5%	10%	32	6 19E+06	1.12E-05	1.81E-12	3 00E-05	1 58E-16	1.60E-04	3.30E-04	6 29E-09	2 33E+01	3.15E+07	6 11E-09
NP239	4 87E+01	2 5%	10%	32	6 19E+06	1.12E-05	1 81E-12	3 00E-05	2.12E-16	1 60E-04	3.30E-04	1.63E-11	6.03E-02	3 15E+07	2.12E-11
NP237	3 88E-01	2 5%	10%	32	6.19E+06	1.12E-05	1 81E-12	3 00E-05	1.69E-18	1 60E-04	3 30E-04	1 69E-08	6 25E+01	3.15E+07	1.75E-10
PU242	2.85E+00	2 5%	10%	32	6.19E+06	1.12E-05	1 81E-12	3 00E-05	1.24E-17	1 60E-04	3 30E-04	9 45E-10	3 50E+00	3.15E+07	7.20E-11
AM242	8.72E+00	2 5%	10%	32	6 19E+06	1.12E-05	1.81E-12	3 00E-05	3 79E-17	1 60E-04	3 30E-04	2 94E-12	1 09E-02	3.15E+07	6 86E-13
AM242M	8 76E+00	2 5%	10%	32	6.19E+06	1.12E-05	1 81E-12	3 00E-05	3 81E-17	1 60E-04	3 30E-04	1.38E-09	5.11E+00	3.15E+07	3 23E-10
														Total	2 43E-02

MPC-32															
Normal Conditions															
Committed Effective Dose Equivalent From Inhalation															
Nuclide	Inventory (Ci/Assy)	% available for release	% remain airborne	No. Assy	MPC Vol (cm3)	L_{nor} Rate at Upstream (cm3/s)	Fraction Released per sec	Release Fraction	Release Rate (Ci/sec)	X/Q (sec/m3)	Breathing Rate (m3/sec)	DCF (Sv/Bq)	DCF (mRem/uCi)	Occupancy Time (sec)	CDE (mRem)
Gases															
H 3	3 68E+02	2.5%	100%	32	6.19E+06	1.12E-05	1.81E-12	0.30	1.60E-10	1.60E-04	3 30E-04	1.73E-11	6.40E-02	3.15E+07	1 70E-05
I129	3 31E-02	2 5%	100%	32	6.19E+06	1.12E-05	1.81E-12	0 30	1.44E-14	1 60E-04	3.30E-04	3.14E-10	1 16E+00	3.15E+07	2 78E-08
KR 85	5.86E+03	2.5%	100%	32	6.19E+06	1.12E-05	1 81E-12	0.30	2.55E-09	1 60E-04	3.30E-04	0.00E+00	0 00E+00	3.15E+07	0 00E+00
Crud															
Co-60	2.18E+01	100.0%	100%	32	6.19E+06	1.12E-05	1 81E-12	0.15	1.89E-10	1.60E-04	3 30E-04	3 45E-07	1 28E+03	3 15E+07	4 02E-01
Volatiles															
SR 90	6 32E+04	2 5%	100%	32	6 19E+06	1.12E-05	1.81E-12	2.00E-04	1.83E-11	1 60E-04	3.30E-04	2.86E-06	1.06E+04	3.15E+07	3 22E-01
RU106	1 59E+04	2.5%	100%	32	6.19E+06	1.12E-05	1 81E-12	2.00E-04	4.61E-12	1.60E-04	3 30E-04	1.04E-06	3 85E+03	3.15E+07	2 95E-02
CS134	4 04E+04	2 5%	100%	32	6 19E+06	1.12E-05	1 81E-12	2.00E-04	1.17E-11	1.60E-04	3 30E-04	1.18E-08	4.37E+01	3 15E+07	8.50E-04
CS137	9.82E+04	2.5%	100%	32	6.19E+06	1.12E-05	1.81E-12	2.00E-04	2.84E-11	1.60E-04	3 30E-04	8 82E-09	3 26E+01	3.15E+07	1 54E-03
Fines															
PU241	8 53E+04	2.5%	10%	32	6.19E+06	1.12E-05	1 81E-12	3.00E-05	3 71E-13	1 60E-04	3.30E-04	3 18E-06	1.18E+04	3.15E+07	7.25E-03
Y 90	6 32E+04	2 5%	10%	32	6.19E+06	1.12E-05	1 81E-12	3.00E-05	2 75E-13	1 60E-04	3.30E-04	9 31E-09	3.44E+01	3.15E+07	1 57E-05
PM147	2 63E+04	2 5%	10%	32	6.19E+06	1 12E-05	1 81E-12	3.00E-05	1 14E-13	1.60E-04	3 30E-04	7.74E-08	2.86E+02	3 15E+07	5 44E-05
CE144	8.14E+03	2 5%	10%	32	6.19E+06	1 12E-05	1.81E-12	3.00E-05	3.54E-14	1.60E-04	3 30E-04	7 91E-07	2 93E+03	3 15E+07	1.72E-04
PR144	8 14E+03	2 5%	10%	32	6 19E+06	1.12E-05	1 81E-12	3.00E-05	3.54E-14	1 60E-04	3 30E-04	9.40E-11	3 48E-01	3.15E+07	2 05E-08
EU154	5 90E+03	2 5%	10%	32	6.19E+06	1.12E-05	1 81E-12	3 00E-05	2.56E-14	1.60E-04	3 30E-04	7.92E-08	2.93E+02	3.15E+07	1 25E-05
CM244	1 01E+04	2.5%	10%	32	6 19E+06	1.12E-05	1 81E-12	3 00E-05	4.39E-14	1 60E-04	3 30E-04	1 93E-05	7.14E+04	3 15E+07	5 21E-03
PU238	5 81E+03	2 5%	10%	32	6.19E+06	1.12E-05	1 81E-12	3.00E-05	2 52E-14	1 60E-04	3.30E-04	3 20E-04	1 18E+06	3.15E+07	4 97E-02
SB125	2 30E+03	2 5%	10%	32	6.19E+06	1.12E-05	1 81E-12	3 00E-05	9 99E-15	1 60E-04	3 30E-04	2.17E-08	8 03E+01	3.15E+07	1.33E-06
EU155	1 65E+03	2 5%	10%	32	6.19E+06	1.12E-05	1 81E-12	3 00E-05	7.17E-15	1 60E-04	3 30E-04	1.19E-08	4 40E+01	3.15E+07	5.25E-07
AM241	9 00E+02	2.5%	10%	32	6.19E+06	1 12E-05	1 81E-12	3 00E-05	3.91E-15	1.60E-04	3 30E-04	1.84E-05	6 81E+04	3.15E+07	4 43E-04
TE125M	5 61E+02	2.5%	10%	32	6 19E+06	1.12E-05	1.81E-12	3 00E-05	2.44E-15	1.60E-04	3 30E-04	1 04E-08	3.85E+01	3.15E+07	1 56E-07
PU240	4 05E+02	2 5%	10%	32	6 19E+06	1.12E-05	1 81E-12	3 00E-05	1.76E-15	1.60E-04	3 30E-04	3 23E-04	1.20E+06	3.15E+07	3 50E-03
SM151	3 38E+02	2.5%	10%	32	6 19E+06	1 12E-05	1 81E-12	3.00E-05	1.47E-15	1 60E-04	3 30E-04	3 26E-09	1.21E+01	3.15E+07	2 95E-08
PU239	2 04E+02	2 5%	10%	32	6.19E+06	1.12E-05	1.81E-12	3 00E-05	8 87E-16	1 60E-04	3 30E-04	3 23E-04	1.20E+06	3.15E+07	1 76E-03
BA137M	9 27E+04	2.5%	10%	32	6.19E+06	1.12E-05	1.81E-12	3 00E-05	4.03E-13	1.60E-04	3 30E-04	0 00E+00	0 00E+00	3 15E+07	0.00E+00
RH106	1 59E+04	2.5%	10%	32	6 19E+06	1.12E-05	1 81E-12	3 00E-05	6 91E-14	1 60E-04	3.30E-04	0 00E+00	0 00E+00	3 15E+07	0 00E+00
PR144M	1 14E+02	2.5%	10%	32	6.19E+06	1.12E-05	1.81E-12	3 00E-05	4 95E-16	1 60E-04	3.30E-04	0 00E+00	0.00E+00	3.15E+07	0 00E+00
AM243	4 87E+01	2.5%	10%	32	6.19E+06	1.12E-05	1.81E-12	3 00E-05	2 12E-16	1 60E-04	3.30E-04	1 78E-05	6 59E+04	3.15E+07	2 32E-05
CM242	3 23E+01	2.5%	10%	32	6 19E+06	1.12E-05	1.81E-12	3.00E-05	1 40E-16	1 60E-04	3 30E-04	1 55E-05	5 74E+04	3 15E+07	1.34E-05
CM243	3 63E+01	2 5%	10%	32	6.19E+06	1.12E-05	1 81E-12	3 00E-05	1.58E-16	1 60E-04	3 30E-04	1 94E-05	7.18E+04	3 15E+07	1 88E-05
NP239	4 87E+01	2 5%	10%	32	6.19E+06	1 12E-05	1 81E-12	3 00E-05	2.12E-16	1 60E-04	3 30E-04	2.36E-09	8.73E+00	3 15E+07	3 07E-09
NP237	3 88E-01	2 5%	10%	32	6 19E+06	1 12E-05	1 81E-12	3 00E-05	1.69E-18	1 60E-04	3 30E-04	1 61E-05	5 96E+04	3 15E+07	1 67E-07
PU242	2.85E+00	2.5%	10%	32	6 19E+06	1.12E-05	1.81E-12	3.00E-05	1 24E-17	1 60E-04	3 30E-04	3.07E-04	1.14E+06	3 15E+07	2 34E-05
AM242	8 72E+00	2 5%	10%	32	6.19E+06	1.12E-05	1.81E-12	3 00E-05	3.79E-17	1.60E-04	3.30E-04	5 20E-08	1 92E+02	3 15E+07	1.21E-08
AM242M	8 76E+00	2 5%	10%	32	6.19E+06	1.12E-05	1.81E-12	3 00E-05	3 81E-17	1.60E-04	3.30E-04	4 20E-06	1 55E+04	3 15E+07	9 84E-07
														Total	8 24E-01

MPC-32															
Normal Conditions															
Committed Effective Dose Equivalent From Inhalation															
Nuclide	Inventory (Ci/Assy)	% available for release	% remain airborne	No. Assy	MPC Vol (cm3)	L_{nor} Rate at Upstream (cm3/s)	Fraction Released per sec	Release Fraction	Release Rate (Ci/sec)	X/Q (sec/m3)	Breathing Rate (m3/sec)	DCF (Sv/Bq)	DCF (mRem/uCi)	Occupancy Time (sec)	CDE (mRem)
Gases															
H 3	3 68E+02	2.5%	100%	32	6.19E+06	1.12E-05	1.81E-12	0.30	1 60E-10	1.60E-04	3.30E-04	1.73E-11	6 40E-02	3.15E+07	1.70E-05
I129	3 31E-02	2 5%	100%	32	6.19E+06	1.12E-05	1.81E-12	0.30	1.44E-14	1 60E-04	3.30E-04	1.40E-10	5.18E-01	3.15E+07	1 24E-08
KR 85	5 86E+03	2 5%	100%	32	6.19E+06	1.12E-05	1 81E-12	0.30	2.55E-09	1 60E-04	3.30E-04	0 00E+00	0 00E+00	3.15E+07	0.00E+00
Crud															
Co-60	2 18E+01	100 0%	100%	32	6.19E+06	1.12E-05	1.81E-12	0.15	1.89E-10	1 60E-04	3.30E-04	1.72E-08	6.36E+01	3.15E+07	2 00E-02
Volatiles															
SR 90	6 32E+04	2 5%	100%	32	6.19E+06	1.12E-05	1 81E-12	2.00E-04	1.83E-11	1.60E-04	3.30E-04	3 36E-07	1 24E+03	3.15E+07	3.79E-02
RU106	1 59E+04	2.5%	100%	32	6 19E+06	1.12E-05	1.81E-12	2 00E-04	4 61E-12	1.60E-04	3 30E-04	1.37E-08	5 07E+01	3.15E+07	3.88E-04
CS134	4 04E+04	2 5%	100%	32	6.19E+06	1.12E-05	1.81E-12	2 00E-04	1.17E-11	1.60E-04	3 30E-04	1.18E-08	4 37E+01	3.15E+07	8.50E-04
CS137	9 82E+04	2 5%	100%	32	6.19E+06	1.12E-05	1 81E-12	2.00E-04	2 84E-11	1 60E-04	3 30E-04	8 30E-09	3 07E+01	3.15E+07	1.45E-03
Fines															
PU241	8 53E+04	2.5%	10%	32	6.19E+06	1.12E-05	1 81E-12	3 00E-05	3.71E-13	1 60E-04	3.30E-04	3.36E-06	1.24E+04	3.15E+07	7.66E-03
Y 90	6 32E+04	2 5%	10%	32	6.19E+06	1.12E-05	1 81E-12	3 00E-05	2.75E-13	1 60E-04	3.30E-04	2 79E-10	1.03E+00	3 15E+07	4.72E-07
PM147	2 63E+04	2 5%	10%	32	6 19E+06	1.12E-05	1.81E-12	3 00E-05	1.14E-13	1 60E-04	3.30E-04	8.16E-09	3.02E+01	3.15E+07	5.74E-06
CE144	8 14E+03	2 5%	10%	32	6 19E+06	1 12E-05	1 81E-12	3 00E-05	3.54E-14	1 60E-04	3 30E-04	2 67E-08	9 88E+01	3.15E+07	5 81E-06
PR144	8 14E+03	2 5%	10%	32	6.19E+06	1.12E-05	1.81E-12	3.00E-05	3 54E-14	1.60E-04	3 30E-04	8 08E-14	2 99E-04	3.15E+07	1.76E-11
EU154	5 90E+03	2.5%	10%	32	6.19E+06	1.12E-05	1 81E-12	3.00E-05	2 56E-14	1.60E-04	3 30E-04	1 06E-07	3 92E+02	3.15E+07	1 67E-05
CM244	1 01E+04	2.5%	10%	32	6 19E+06	1.12E-05	1.81E-12	3 00E-05	4.39E-14	1.60E-04	3.30E-04	9.38E-05	3.47E+05	3.15E+07	2 53E-02
PU238	5 81E+03	2.5%	10%	32	6.19E+06	1.12E-05	1.81E-12	3 00E-05	2.52E-14	1 60E-04	3.30E-04	1.52E-04	5 62E+05	3.15E+07	2.36E-02
SB125	2 30E+03	2.5%	10%	32	6.19E+06	1.12E-05	1.81E-12	3 00E-05	9.99E-15	1 60E-04	3.30E-04	6.49E-10	2.40E+00	3.15E+07	3 99E-08
EU155	1 65E+03	2 5%	10%	32	6.19E+06	1.12E-05	1.81E-12	3.00E-05	7.17E-15	1 60E-04	3 30E-04	1 43E-08	5.29E+01	3.15E+07	6.31E-07
AM241	9 00E+02	2 5%	10%	32	6.19E+06	1.12E-05	1.81E-12	3.00E-05	3.91E-15	1 60E-04	3.30E-04	1.74E-04	6 44E+05	3.15E+07	4.19E-03
TE125M	5 61E+02	2 5%	10%	32	6.19E+06	1.12E-05	1.81E-12	3 00E-05	2.44E-15	1.60E-04	3 30E-04	3 01E-09	1.11E+01	3.15E+07	4.51E-08
PU240	4 05E+02	2.5%	10%	32	6.19E+06	1.12E-05	1.81E-12	3 00E-05	1.76E-15	1 60E-04	3.30E-04	1.69E-04	6.25E+05	3.15E+07	1.83E-03
SM151	3 38E+02	2 5%	10%	32	6.19E+06	1.12E-05	1.81E-12	3 00E-05	1.47E-15	1.60E-04	3 30E-04	1.10E-08	4.07E+01	3.15E+07	9.94E-08
PU239	2 04E+02	2 5%	10%	32	6.19E+06	1.12E-05	1 81E-12	3 00E-05	8.87E-16	1 60E-04	3 30E-04	1 69E-04	6 25E+05	3.15E+07	9 22E-04
BA137M	9 27E+04	2.5%	10%	32	6 19E+06	1.12E-05	1.81E-12	3 00E-05	4.03E-13	1.60E-04	3.30E-04	0.00E+00	0 00E+00	3.15E+07	0 00E+00
RH106	1 59E+04	2 5%	10%	32	6.19E+06	1.12E-05	1.81E-12	3.00E-05	6 91E-14	1.60E-04	3.30E-04	0 00E+00	0.00E+00	3.15E+07	0 00E+00
PR144M	1.14E+02	2.5%	10%	32	6.19E+06	1.12E-05	1 81E-12	3.00E-05	4 95E-16	1 60E-04	3 30E-04	0 00E+00	0 00E+00	3.15E+07	0 00E+00
AM243	4 87E+01	2 5%	10%	32	6.19E+06	1.12E-05	1 81E-12	3.00E-05	2.12E-16	1 60E-04	3.30E-04	1.73E-04	6.40E+05	3.15E+07	2.25E-04
CM242	3 23E+01	2 5%	10%	32	6.19E+06	1.12E-05	1 81E-12	3 00E-05	1 40E-16	1 60E-04	3.30E-04	3.90E-06	1.44E+04	3.15E+07	3.37E-06
CM243	3 63E+01	2 5%	10%	32	6.19E+06	1.12E-05	1.81E-12	3 00E-05	1 58E-16	1.60E-04	3.30E-04	1.18E-04	4.37E+05	3.15E+07	1.15E-04
NP239	4.87E+01	2 5%	10%	32	6.19E+06	1.12E-05	1 81E-12	3.00E-05	2.12E-16	1 60E-04	3 30E-04	2 08E-10	7.70E-01	3.15E+07	2 71E-10
NP237	3 88E-01	2 5%	10%	32	6.19E+06	1.12E-05	1 81E-12	3 00E-05	1.69E-18	1 60E-04	3.30E-04	2.62E-04	9 69E+05	3.15E+07	2.72E-06
PU242	2 85E+00	2 5%	10%	32	6 19E+06	1.12E-05	1 81E-12	3 00E-05	1.24E-17	1 60E-04	3 30E-04	1 61E-04	5 96E+05	3.15E+07	1.23E-05
AM242	8 72E+00	2.5%	10%	32	6.19E+06	1.12E-05	1.81E-12	3 00E-05	3.79E-17	1.60E-04	3.30E-04	1.32E-08	4 88E+01	3.15E+07	3.08E-09
AM242M	8 76E+00	2.5%	10%	32	6.19E+06	1.12E-05	1.81E-12	3 00E-05	3.81E-17	1 60E-04	3 30E-04	1 69E-04	6.25E+05	3.15E+07	3 96E-05
														Total	1.25E-01

MPC-32															
Normal Conditions															
Committed Effective Dose Equivalent From Inhalation															
Nuclide	Inventory (Ci/Assy)	% available for release	% remain airborne	No Assy	MPC Vol (cm3)	L_{nor} Rate at Upstream (cm3/s)	Fraction Released per sec	Release Fraction	Release Rate (Ci/sec)	X/Q (sec/m3)	Breathing Rate (m3/sec)	DCF (Sv/Bq)	DCF (mRem/uCi)	Occupancy Time (sec)	CDE (mRem)
Gases															
H 3	3 68E+02	2.5%	100%	32	6 19E+06	1.12E-05	1 81E-12	0 30	1 60E-10	1 60E-04	3 30E-04	1.73E-11	6 40E-02	3.15E+07	1.70E-05
I129	3 31E-02	2 5%	100%	32	6 19E+06	1.12E-05	1 81E-12	0.30	1 44E-14	1 60E-04	3 30E-04	1 38E-10	5.11E-01	3.15E+07	1.22E-08
KR 85	5 86E+03	2.5%	100%	32	6.19E+06	1.12E-05	1.81E-12	0 30	2 55E-09	1 60E-04	3 30E-04	0 00E+00	0.00E+00	3.15E+07	0 00E+00
Crud															
Co-60	2 18E+01	100.0%	100%	32	6.19E+06	1.12E-05	1 81E-12	0 15	1.89E-10	1 60E-04	3.30E-04	1 35E-08	5 00E+01	3.15E+07	1 57E-02
Volatiles															
SR 90	6 32E+04	2.5%	100%	32	6.19E+06	1.12E-05	1.81E-12	2 00E-04	1.83E-11	1 60E-04	3.30E-04	7.27E-07	2.69E+03	3.15E+07	8 19E-02
RU106	1 59E+04	2.5%	100%	32	6.19E+06	1 12E-05	1.81E-12	2 00E-04	4.61E-12	1 60E-04	3.30E-04	1 37E-08	5 07E+01	3.15E+07	3 88E-04
CS134	4 04E+04	2 5%	100%	32	6 19E+06	1.12E-05	1 81E-12	2 00E-04	1.17E-11	1 60E-04	3.30E-04	1.10E-08	4.07E+01	3.15E+07	7 92E-04
CS137	9 82E+04	2.5%	100%	32	6.19E+06	1.12E-05	1.81E-12	2 00E-04	2 84E-11	1 60E-04	3 30E-04	7.94E-09	2.94E+01	3 15E+07	1 39E-03
Fines															
PU241	8 53E+04	2.5%	10%	32	6.19E+06	1 12E-05	1.81E-12	3 00E-05	3.71E-13	1 60E-04	3.30E-04	4 20E-05	1.55E+05	3.15E+07	9 58E-02
Y 90	6 32E+04	2 5%	10%	32	6 19E+06	1.12E-05	1 81E-12	3 00E-05	2.75E-13	1 60E-04	3.30E-04	2 78E-10	1 03E+00	3.15E+07	4 70E-07
PM147	2 63E+04	2 5%	10%	32	6 19E+06	1.12E-05	1.81E-12	3 00E-05	1.14E-13	1 60E-04	3.30E-04	1 02E-07	3 77E+02	3 15E+07	7 17E-05
CE144	8 14E+03	2 5%	10%	32	6 19E+06	1.12E-05	1 81E-12	3 00E-05	3 54E-14	1 60E-04	3 30E-04	4.54E-08	1 68E+02	3.15E+07	9 88E-06
PR144	8 14E+03	2 5%	10%	32	6 19E+06	1.12E-05	1 81E-12	3 00E-05	3.54E-14	1 60E-04	3.30E-04	1.35E-13	5 00E-04	3.15E+07	2 94E-11
EU154	5 90E+03	2 5%	10%	32	6 19E+06	1.12E-05	1 81E-12	3.00E-05	2 56E-14	1 60E-04	3.30E-04	5 23E-07	1.94E+03	3 15E+07	8.25E-05
CM244	1 01E+04	2 5%	10%	32	6.19E+06	1.12E-05	1 81E-12	3 00E-05	4.39E-14	1.60E-04	3 30E-04	1.17E-03	4.33E+06	3.15E+07	3 16E-01
PU238	5.81E+03	2 5%	10%	32	6 19E+06	1.12E-05	1 81E-12	3 00E-05	2.52E-14	1 60E-04	3.30E-04	1 90E-03	7 03E+06	3.15E+07	2 95E-01
SB125	2 30E+03	2 5%	10%	32	6.19E+06	1.12E-05	1 81E-12	3.00E-05	9 99E-15	1.60E-04	3 30E-04	2.73E-09	1 01E+01	3.15E+07	1 68E-07
EU155	1 65E+03	2 5%	10%	32	6 19E+06	1.12E-05	1.81E-12	3 00E-05	7.17E-15	1 60E-04	3.30E-04	1 52E-07	5.62E+02	3.15E+07	6 71E-06
AM241	9.00E+02	2 5%	10%	32	6.19E+06	1.12E-05	1.81E-12	3 00E-05	3 91E-15	1 60E-04	3 30E-04	2.17E-03	8 03E+06	3.15E+07	5 22E-02
TE125M	5 61E+02	2 5%	10%	32	6 19E+06	1.12E-05	1.81E-12	3 00E-05	2.44E-15	1.60E-04	3.30E-04	3 21E-08	1.19E+02	3.15E+07	4 81E-07
PU240	4 05E+02	2 5%	10%	32	6.19E+06	1.12E-05	1 81E-12	3.00E-05	1.76E-15	1.60E-04	3 30E-04	2.11E-03	7.81E+06	3.15E+07	2 29E-02
SM151	3 38E+02	2 5%	10%	32	6.19E+06	1.12E-05	1.81E-12	3.00E-05	1.47E-15	1 60E-04	3 30E-04	1.38E-07	5.11E+02	3.15E+07	1 25E-06
PU239	2 04E+02	2 5%	10%	32	6 19E+06	1.12E-05	1 81E-12	3 00E-05	8 87E-16	1.60E-04	3 30E-04	2.11E-03	7.81E+06	3.15E+07	1.15E-02
BA137M	9 27E+04	2.5%	10%	32	6 19E+06	1.12E-05	1.81E-12	3 00E-05	4 03E-13	1 60E-04	3 30E-04	0 00E+00	0 00E+00	3 15E+07	0 00E+00
RH106	1 59E+04	2 5%	10%	32	6 19E+06	1.12E-05	1.81E-12	3 00E-05	6.91E-14	1.60E-04	3 30E-04	0 00E+00	0 00E+00	3.15E+07	0 00E+00
PR144M	1.14E+02	2 5%	10%	32	6.19E+06	1.12E-05	1 81E-12	3 00E-05	4 95E-16	1.60E-04	3 30E-04	0.00E+00	0 00E+00	3 15E+07	0 00E+00
AM243	4 87E+01	2 5%	10%	32	6.19E+06	1.12E-05	1.81E-12	3 00E-05	2.12E-16	1.60E-04	3 30E-04	2.17E-03	8 03E+06	3.15E+07	2 83E-03
CM242	3 23E+01	2 5%	10%	32	6.19E+06	1 12E-05	1.81E-12	3 00E-05	1 40E-16	1.60E-04	3 30E-04	4 87E-05	1.80E+05	3 15E+07	4 21E-05
CM243	3 63E+01	2 5%	10%	32	6.19E+06	1.12E-05	1 81E-12	3 00E-05	1.58E-16	1 60E-04	3.30E-04	1.47E-03	5 44E+06	3.15E+07	1 43E-03
NP239	4 87E+01	2 5%	10%	32	6 19E+06	1.12E-05	1.81E-12	3 00E-05	2 12E-16	1 60E-04	3 30E-04	2.03E-09	7 51E+00	3 15E+07	2.64E-09
NP237	3 88E-01	2 5%	10%	32	6.19E+06	1.12E-05	1 81E-12	3 00E-05	1.69E-18	1 60E-04	3 30E-04	3.27E-03	1 21E+07	3 15E+07	3 39E-05
PU242	2 85E+00	2 5%	10%	32	6.19E+06	1.12E-05	1 81E-12	3.00E-05	1 24E-17	1 60E-04	3.30E-04	2 01E-03	7.44E+06	3.15E+07	1 53E-04
AM242	8 72E+00	2 5%	10%	32	6.19E+06	1.12E-05	1 81E-12	3 00E-05	3.79E-17	1 60E-04	3 30E-04	1.65E-07	6 11E+02	3.15E+07	3 85E-08
AM242M	8.76E+00	2 5%	10%	32	6.19E+06	1.12E-05	1 81E-12	3 00E-05	3.81E-17	1 60E-04	3 30E-04	2.12E-03	7 84E+06	3 15E+07	4 97E-04
														Total	8 99E-01

Inh-Thyroid

MPC-32															
Normal Conditions															
Committed Effective Dose Equivalent From Inhalation															
Nuclide	Inventory (Ci/Assy)	% available for release	% remain airborne	No. Assy	MPC Vol (cm3)	L_{nor} Rate at Upstream (cm3/s)	Fraction Released per sec	Release Fraction	Release Rate (Ci/sec)	X/Q (sec/m3)	Breathing Rate (m3/sec)	DCF (Sv/Bq)	DCF (mRem/uCi)	Occupancy Time (sec)	CDE (mRem)
Gases															
H 3	3 68E+02	2.5%	100%	32	6.19E+06	1.12E-05	1.81E-12	0.30	1.60E-10	1.60E-04	3.30E-04	1.73E-11	6.40E-02	3.15E+07	1.70E-05
I129	3 31E-02	2 5%	100%	32	6.19E+06	1.12E-05	1 81E-12	0 30	1.44E-14	1 60E-04	3 30E-04	1.56E-06	5.77E+03	3 15E+07	1.38E-04
KR 85	5 86E+03	2.5%	100%	32	6.19E+06	1.12E-05	1.81E-12	0.30	2.55E-09	1.60E-04	3.30E-04	0 00E+00	0 00E+00	3.15E+07	0 00E+00
Crud															
Co-60	2 18E+01	100 0%	100%	32	6.19E+06	1.12E-05	1 81E-12	0.15	1.89E-10	1 60E-04	3.30E-04	1 62E-08	5 99E+01	3.15E+07	1.89E-02
Volatiles															
SR 90	6.32E+04	2.5%	100%	32	6.19E+06	1.12E-05	1.81E-12	2.00E-04	1.83E-11	1 60E-04	3 30E-04	2 64E-09	9 77E+00	3.15E+07	2 97E-04
RU106	1 59E+04	2 5%	100%	32	6.19E+06	1.12E-05	1.81E-12	2 00E-04	4 61E-12	1 60E-04	3 30E-04	1.37E-08	5 07E+01	3.15E+07	3 88E-04
CS134	4 04E+04	2.5%	100%	32	6.19E+06	1.12E-05	1 81E-12	2.00E-04	1.17E-11	1 60E-04	3 30E-04	1 11E-08	4.11E+01	3.15E+07	7.99E-04
CS137	9 82E+04	2.5%	100%	32	6.19E+06	1.12E-05	1 81E-12	2 00E-04	2.84E-11	1.60E-04	3 30E-04	7.93E-09	2 93E+01	3.15E+07	1.39E-03
Fines															
PU241	8 53E+04	2.5%	10%	32	6.19E+06	1.12E-05	1.81E-12	3.00E-05	3 71E-13	1 60E-04	3 30E-04	1.24E-11	4.59E-02	3.15E+07	2 83E-08
Y 90	6 32E+04	2.5%	10%	32	6.19E+06	1.12E-05	1.81E-12	3 00E-05	2.75E-13	1 60E-04	3.30E-04	9 52E-12	3.52E-02	3.15E+07	1.61E-08
PM147	2.63E+04	2 5%	10%	32	6.19E+06	1.12E-05	1 81E-12	3 00E-05	1.14E-13	1 60E-04	3 30E-04	1.98E-14	7.33E-05	3.15E+07	1.39E-11
CE144	8 14E+03	2.5%	10%	32	6 19E+06	1.12E-05	1 81E-12	3 00E-05	3 54E-14	1 60E-04	3 30E-04	1.88E-09	6 96E+00	3.15E+07	4 09E-07
PR144	8.14E+03	2.5%	10%	32	6.19E+06	1.12E-05	1.81E-12	3.00E-05	3.54E-14	1 60E-04	3.30E-04	8 47E-15	3.13E-05	3.15E+07	1 84E-12
EU154	5.90E+03	2 5%	10%	32	6.19E+06	1.12E-05	1 81E-12	3 00E-05	2.56E-14	1.60E-04	3.30E-04	7.14E-09	2.64E+01	3.15E+07	1.13E-06
CM244	1 01E+04	2.5%	10%	32	6.19E+06	1.12E-05	1.81E-12	3 00E-05	4.39E-14	1.60E-04	3.30E-04	1.01E-09	3.74E+00	3.15E+07	2.73E-07
PU238	5 81E+03	2 5%	10%	32	6.19E+06	1.12E-05	1 81E-12	3.00E-05	2.52E-14	1.60E-04	3 30E-04	9 62E-10	3 56E+00	3.15E+07	1.49E-07
SB125	2 30E+03	2 5%	10%	32	6.19E+06	1.12E-05	1.81E-12	3.00E-05	9 99E-15	1.60E-04	3.30E-04	3.24E-10	1.20E+00	3.15E+07	1.99E-08
EU155	1.65E+03	2 5%	10%	32	6.19E+06	1.12E-05	1 81E-12	3 00E-05	7.17E-15	1.60E-04	3 30E-04	2 40E-10	8 88E-01	3.15E+07	1 06E-08
AM241	9 00E+02	2.5%	10%	32	6.19E+06	1.12E-05	1 81E-12	3 00E-05	3.91E-15	1 60E-04	3 30E-04	1.60E-09	5 92E+00	3.15E+07	3 85E-08
TE125M	5 61E+02	2 5%	10%	32	6.19E+06	1.12E-05	1 81E-12	3 00E-05	2.44E-15	1 60E-04	3.30E-04	9 93E-11	3 67E-01	3.15E+07	1.49E-09
PU240	4 05E+02	2.5%	10%	32	6.19E+06	1.12E-05	1.81E-12	3.00E-05	1.76E-15	1.60E-04	3 30E-04	9 05E-10	3 35E+00	3 15E+07	9 80E-09
SM151	3.38E+02	2.5%	10%	32	6.19E+06	1.12E-05	1 81E-12	3 00E-05	1.47E-15	1 60E-04	3 30E-04	1.32E-14	4.88E-05	3.15E+07	1.19E-13
PU239	2 04E+02	2.5%	10%	32	6.19E+06	1.12E-05	1 81E-12	3 00E-05	8 87E-16	1 60E-04	3 30E-04	9 03E-10	3.34E+00	3.15E+07	4.93E-09
BA137M	9 27E+04	2.5%	10%	32	6.19E+06	1.12E-05	1 81E-12	3.00E-05	4 03E-13	1 60E-04	3.30E-04	0 00E+00	0.00E+00	3.15E+07	0 00E+00
RH106	1 59E+04	2 5%	10%	32	6.19E+06	1.12E-05	1 81E-12	3.00E-05	6 91E-14	1.60E-04	3 30E-04	0 00E+00	0.00E+00	3 15E+07	0 00E+00
PR144M	1.14E+02	2.5%	10%	32	6.19E+06	1.12E-05	1 81E-12	3 00E-05	4.95E-16	1 60E-04	3.30E-04	0 00E+00	0 00E+00	3.15E+07	0 00E+00
AM243	4 87E+01	2.5%	10%	32	6.19E+06	1.12E-05	1.81E-12	3 00E-05	2.12E-16	1 60E-04	3 30E-04	8.29E-09	3.07E+01	3.15E+07	1.08E-08
CM242	3 23E+01	2 5%	10%	32	6.19E+06	1.12E-05	1.81E-12	3 00E-05	1.40E-16	1.60E-04	3.30E-04	9 41E-10	3.48E+00	3.15E+07	8.13E-10
CM243	3 63E+01	2 5%	10%	32	6.19E+06	1.12E-05	1 81E-12	3 00E-05	1.58E-16	1.60E-04	3.30E-04	3 83E-09	1.42E+01	3.15E+07	3.72E-09
NP239	4 87E+01	2 5%	10%	32	6 19E+06	1.12E-05	1.81E-12	3 00E-05	2.12E-16	1.60E-04	3.30E-04	7 62E-12	2 82E-02	3.15E+07	9.92E-12
NP237	3.88E-01	2 5%	10%	32	6.19E+06	1.12E-05	1 81E-12	3.00E-05	1.69E-18	1 60E-04	3.30E-04	1 34E-08	4 96E+01	3 15E+07	1.39E-10
PU242	2 85E+00	2.5%	10%	32	6.19E+06	1.12E-05	1 81E-12	3 00E-05	1.24E-17	1 60E-04	3.30E-04	8.79E-10	3.25E+00	3.15E+07	6 70E-11
AM242	8.72E+00	2 5%	10%	32	6.19E+06	1.12E-05	1 81E-12	3.00E-05	3 79E-17	1 60E-04	3.30E-04	2.52E-12	9.32E-03	3.15E+07	5 88E-13
AM242M	8 76E+00	2.5%	10%	32	6.19E+06	1.12E-05	1.81E-12	3 00E-05	3 81E-17	1 60E-04	3.30E-04	5 64E-10	2 09E+00	3 15E+07	1.32E-10
														Total	2 19E-02

MPC-32															
Normal Conditions															
Committed Effective Dose Equivalent From Inhalation															
Nuclide	Inventory (Ci/Assy)	% available for release	% remain airborne	No. Assy	MPC Vol (cm3)	L_{nor} Rate at Upstream (cm3/s)	Fraction Released per sec	Release Fraction	Release Rate (Ci/sec)	X/Q (sec/m3)	Breathing Rate (m3/sec)	DCF (Sv/Bq)	DCF (mRem/uCi)	Occupancy Time (sec)	CEDE (mRem)
Gases															
H 3	3 68E+02	2 5%	100%	32	6 19E+06	1.12E-05	1.81E-12	0 30	1.60E-10	1.60E-04	3.30E-04	1.73E-11	6 40E-02	3.15E+07	1 70E-05
I129	3 31E-02	2.5%	100%	32	6.19E+06	1.12E-05	1 81E-12	0 30	1 44E-14	1 60E-04	3 30E-04	4 69E-08	1.74E+02	3.15E+07	4.15E-06
KR 85	5 86E+03	2.5%	100%	32	6 19E+06	1.12E-05	1.81E-12	0 30	2 55E-09	1 60E-04	3 30E-04	0 00E+00	0 00E+00	3.15E+07	0 00E+00
Crud															
Co-60	2.18E+01	100.0%	100%	32	6.19E+06	1 12E-05	1.81E-12	0 15	1 89E-10	1 60E-04	3 30E-04	5 91E-08	2 19E+02	3 15E+07	6 88E-02
Volatiles															
SR 90	6 32E+04	2 5%	100%	32	6 19E+06	1.12E-05	1 81E-12	2.00E-04	1 83E-11	1 60E-04	3 30E-04	3 51E-07	1.30E+03	3 15E+07	3 95E-02
RU106	1 59E+04	2.5%	100%	32	6 19E+06	1.12E-05	1 81E-12	2 00E-04	4 61E-12	1 60E-04	3 30E-04	1.29E-07	4 77E+02	3 15E+07	3 66E-03
CS134	4 04E+04	2 5%	100%	32	6.19E+06	1.12E-05	1 81E-12	2 00E-04	1.17E-11	1 60E-04	3 30E-04	1.25E-08	4 63E+01	3 15E+07	9.00E-04
CS137	9 82E+04	2 5%	100%	32	6.19E+06	1.12E-05	1 81E-12	2.00E-04	2 84E-11	1.60E-04	3 30E-04	8 63E-09	3 19E+01	3 15E+07	1 51E-03
Fines															
PU241	8 53E+04	2 5%	10%	32	6 19E+06	1.12E-05	1 81E-12	3.00E-05	3 71E-13	1 60E-04	3.30E-04	2 23E-06	8.25E+03	3 15E+07	5 09E-03
Y 90	6.32E+04	2 5%	10%	32	6.19E+06	1.12E-05	1 81E-12	3.00E-05	2.75E-13	1.60E-04	3 30E-04	2 28E-09	8.44E+00	3 15E+07	3 85E-06
PM147	2 63E+04	2 5%	10%	32	6.19E+06	1.12E-05	1.81E-12	3 00E-05	1.14E-13	1 60E-04	3.30E-04	1 06E-08	3 92E+01	3.15E+07	7 46E-06
CE144	8.14E+03	2.5%	10%	32	6.19E+06	1.12E-05	1.81E-12	3 00E-05	3.54E-14	1.60E-04	3 30E-04	1.01E-07	3 74E+02	3.15E+07	2 20E-05
PR144	8.14E+03	2 5%	10%	32	6 19E+06	1.12E-05	1.81E-12	3.00E-05	3 54E-14	1.60E-04	3 30E-04	1.17E-11	4 33E-02	3.15E+07	2.55E-09
EU154	5 90E+03	2.5%	10%	32	6.19E+06	1.12E-05	1 81E-12	3 00E-05	2.56E-14	1.60E-04	3 30E-04	7.73E-08	2 86E+02	3 15E+07	1.22E-05
CM244	1 01E+04	2.5%	10%	32	6.19E+06	1.12E-05	1.81E-12	3 00E-05	4 39E-14	1.60E-04	3 30E-04	6.70E-05	2 48E+05	3 15E+07	1.81E-02
PU238	5 81E+03	2.5%	10%	32	6 19E+06	1.12E-05	1.81E-12	3 00E-05	2.52E-14	1 60E-04	3.30E-04	1.06E-04	3 92E+05	3.15E+07	1 65E-02
SB125	2 30E+03	2.5%	10%	32	6.19E+06	1.12E-05	1 81E-12	3 00E-05	9 99E-15	1.60E-04	3 30E-04	3 30E-09	1.22E+01	3 15E+07	2.03E-07
EU155	1.65E+03	2 5%	10%	32	6.19E+06	1.12E-05	1 81E-12	3 00E-05	7.17E-15	1 60E-04	3 30E-04	1.12E-08	4 14E+01	3.15E+07	4.94E-07
AM241	9 00E+02	2 5%	10%	32	6.19E+06	1.12E-05	1 81E-12	3.00E-05	3 91E-15	1 60E-04	3 30E-04	1.20E-04	4 44E+05	3 15E+07	2 89E-03
TE125M	5 61E+02	2 5%	10%	32	6 19E+06	1.12E-05	1 81E-12	3.00E-05	2.44E-15	1.60E-04	3 30E-04	1.97E-09	7 29E+00	3.15E+07	2 95E-08
PU240	4 05E+02	2 5%	10%	32	6 19E+06	1.12E-05	1 81E-12	3.00E-05	1.76E-15	1 60E-04	3 30E-04	1 16E-04	4 29E+05	3.15E+07	1.26E-03
SM151	3 38E+02	2 5%	10%	32	6 19E+06	1.12E-05	1 81E-12	3 00E-05	1.47E-15	1 60E-04	3.30E-04	8.10E-09	3 00E+01	3.15E+07	7.32E-08
PU239	2.04E+02	2 5%	10%	32	6 19E+06	1.12E-05	1 81E-12	3.00E-05	8 87E-16	1 60E-04	3 30E-04	1.16E-04	4 29E+05	3.15E+07	6 33E-04
BA137M	9.27E+04	2 5%	10%	32	6 19E+06	1.12E-05	1.81E-12	3 00E-05	4.03E-13	1 60E-04	3 30E-04	0 00E+00	0.00E+00	3.15E+07	0.00E+00
RH106	1 59E+04	2 5%	10%	32	6 19E+06	1.12E-05	1 81E-12	3 00E-05	6.91E-14	1 60E-04	3.30E-04	0 00E+00	0 00E+00	3.15E+07	0 00E+00
PR144M	1.14E+02	2.5%	10%	32	6.19E+06	1.12E-05	1.81E-12	3.00E-05	4 95E-16	1.60E-04	3 30E-04	0 00E+00	0 00E+00	3.15E+07	0 00E+00
AM243	4 87E+01	2 5%	10%	32	6 19E+06	1.12E-05	1.81E-12	3 00E-05	2.12E-16	1.60E-04	3 30E-04	1.19E-04	4 40E+05	3.15E+07	1.55E-04
CM242	3.23E+01	2 5%	10%	32	6.19E+06	1.12E-05	1 81E-12	3 00E-05	1 40E-16	1 60E-04	3 30E-04	4 67E-06	1.73E+04	3 15E+07	4 03E-06
CM243	3 63E+01	2 5%	10%	32	6 19E+06	1.12E-05	1 81E-12	3 00E-05	1.58E-16	1.60E-04	3 30E-04	8 30E-05	3 07E+05	3.15E+07	8 06E-05
NP239	4 87E+01	2 5%	10%	32	6 19E+06	1.12E-05	1.81E-12	3 00E-05	2 12E-16	1.60E-04	3 30E-04	6.78E-10	2 51E+00	3.15E+07	8 83E-10
NP237	3 88E-01	2 5%	10%	32	6.19E+06	1.12E-05	1.81E-12	3.00E-05	1.69E-18	1 60E-04	3.30E-04	1.46E-04	5.40E+05	3 15E+07	1.51E-06
PU242	2 85E+00	2.5%	10%	32	6 19E+06	1.12E-05	1.81E-12	3 00E-05	1.24E-17	1 60E-04	3.30E-04	1 11E-04	4.11E+05	3.15E+07	8 46E-06
AM242	8.72E+00	2 5%	10%	32	6 19E+06	1.12E-05	1.81E-12	3 00E-05	3.79E-17	1.60E-04	3 30E-04	1 58E-08	5 85E+01	3.15E+07	3 68E-09
AM242M	8 76E+00	2.5%	10%	32	6 19E+06	1.12E-05	1 81E-12	3 00E-05	3.81E-17	1 60E-04	3 30E-04	1.15E-04	4 26E+05	3.15E+07	2 69E-05
														Total	1 59E-01

MPC-32															
Off-Normal Conditions															
Committed Effective Dose Equivalent From Inhalation															
Nuclide	Inventory (Ci/Assy)	% available for release	% remain airborne	No. Assy	MPC Vol (cm3)	L_{offnor} Rate at Upstream (cm3/s)	Fraction Released per sec	Release Fraction	Release Rate (Ci/sec)	X/Q (sec/m3)	Breathing Rate (m3/sec)	DCF (Sv/Bq)	DCF (mRem/uCi)	Occupancy Time (sec)	CDE (mRem)
Gases															
H 3	3 68E+02	11 5%	100%	32	6.19E+06	1.12E-05	1.81E-12	0.30	7.36E-10	1 60E-04	3 30E-04	1.73E-11	6.40E-02	3.15E+07	7 83E-05
I129	3 31E-02	11.5%	100%	32	6 19E+06	1.12E-05	1 81E-12	0.30	6.62E-14	1.60E-04	3.30E-04	8.69E-11	3 22E-01	3.15E+07	3.54E-08
KR 85	5 86E+03	11.5%	100%	32	6.19E+06	1.12E-05	1 81E-12	0.30	1.17E-08	1 60E-04	3 30E-04	0.00E+00	0 00E+00	3 15E+07	0 00E+00
Crud															
Co-60	2.18E+01	100 0%	100%	32	6.19E+06	1.12E-05	1.81E-12	0.15	1.89E-10	1 60E-04	3 30E-04	4.76E-09	1.76E+01	3.15E+07	5 54E-03
Volatiles															
SR 90	6 32E+04	11 5%	100%	32	6.19E+06	1.12E-05	1 81E-12	2 00E-04	8.42E-11	1.60E-04	3.30E-04	2 64E-09	9.77E+00	3.15E+07	1.37E-03
RU106	1 59E+04	11.5%	100%	32	6.19E+06	1.12E-05	1 81E-12	2 00E-04	2.12E-11	1 60E-04	3 30E-04	1.38E-08	5.11E+01	3.15E+07	1 80E-03
CS134	4 04E+04	11.5%	100%	32	6.19E+06	1.12E-05	1.81E-12	2.00E-04	5.38E-11	1 60E-04	3 30E-04	1.30E-08	4.81E+01	3 15E+07	4.31E-03
CS137	9 82E+04	11 5%	100%	32	6.19E+06	1.12E-05	1.81E-12	2 00E-04	1.31E-10	1 60E-04	3.30E-04	8.76E-09	3 24E+01	3.15E+07	7 05E-03
Fines															
PU241	8 53E+04	11.5%	10%	32	6 19E+06	1.12E-05	1 81E-12	3 00E-05	1.71E-12	1 60E-04	3.30E-04	6 82E-07	2.52E+03	3.15E+07	7.16E-03
Y 90	6.32E+04	11.5%	10%	32	6.19E+06	1.12E-05	1.81E-12	3.00E-05	1.26E-12	1.60E-04	3.30E-04	9 52E-12	3 52E-02	3 15E+07	7.40E-08
PM147	2 63E+04	11.5%	10%	32	6.19E+06	1.12E-05	1 81E-12	3 00E-05	5.26E-13	1 60E-04	3.30E-04	1 88E-14	6 96E-05	3.15E+07	6 08E-11
CE144	8.14E+03	11 5%	10%	32	6.19E+06	1.12E-05	1 81E-12	3 00E-05	1.63E-13	1 60E-04	3 30E-04	1.93E-09	7.14E+00	3.15E+07	1.93E-06
PR144	8.14E+03	11 5%	10%	32	6.19E+06	1.12E-05	1 81E-12	3 00E-05	1.63E-13	1 60E-04	3.30E-04	2.41E-15	8.92E-06	3.15E+07	2.41E-12
EU154	5 90E+03	11 5%	10%	32	6.19E+06	1.12E-05	1.81E-12	3.00E-05	1.18E-13	1.60E-04	3.30E-04	1.17E-08	4.33E+01	3.15E+07	8.49E-06
CM244	1 01E+04	11 5%	10%	32	6.19E+06	1.12E-05	1.81E-12	3 00E-05	2.02E-13	1.60E-04	3 30E-04	1.59E-05	5 88E+04	3.15E+07	1.98E-02
PU238	5 81E+03	11 5%	10%	32	6.19E+06	1.12E-05	1.81E-12	3.00E-05	1.16E-13	1 60E-04	3 30E-04	2.80E-05	1.04E+05	3 15E+07	2 00E-02
SB125	2.30E+03	11.5%	10%	32	6.19E+06	1.12E-05	1.81E-12	3 00E-05	4.60E-14	1.60E-04	3 30E-04	3 60E-10	1 33E+00	3.15E+07	1 02E-07
EU155	1 65E+03	11.5%	10%	32	6.19E+06	1.12E-05	1.81E-12	3.00E-05	3 30E-14	1.60E-04	3.30E-04	3 56E-10	1.32E+00	3.15E+07	7 23E-08
AM241	9 00E+02	11.5%	10%	32	6.19E+06	1.12E-05	1 81E-12	3.00E-05	1.80E-14	1 60E-04	3 30E-04	3.25E-05	1.20E+05	3.15E+07	3 60E-03
TE125M	5.61E+02	11.5%	10%	32	6.19E+06	1.12E-05	1 81E-12	3.00E-05	1.12E-14	1.60E-04	3.30E-04	1 24E-10	4.59E-01	3.15E+07	8.56E-09
PU240	4 05E+02	11 5%	10%	32	6.19E+06	1.12E-05	1.81E-12	3.00E-05	8.10E-15	1.60E-04	3 30E-04	3.18E-05	1.18E+05	3.15E+07	1 58E-03
SM151	3 38E+02	11.5%	10%	32	6.19E+06	1.12E-05	1 81E-12	3 00E-05	6.76E-15	1.60E-04	3 30E-04	4 03E-14	1.49E-04	3.15E+07	1.68E-12
PU239	2 04E+02	11 5%	10%	32	6.19E+06	1.12E-05	1.81E-12	3.00E-05	4.08E-15	1 60E-04	3 30E-04	3.18E-05	1.18E+05	3.15E+07	7.98E-04
BA137M	9.27E+04	11.5%	10%	32	6.19E+06	1.12E-05	1 81E-12	3 00E-05	1.85E-12	1.60E-04	3.30E-04	0 00E+00	0 00E+00	3.15E+07	0 00E+00
RH106	1.59E+04	11.5%	10%	32	6.19E+06	1.12E-05	1 81E-12	3 00E-05	3.18E-13	1.60E-04	3.30E-04	0 00E+00	0 00E+00	3.15E+07	0 00E+00
PR144M	1.14E+02	11.5%	10%	32	6.19E+06	1.12E-05	1.81E-12	3 00E-05	2.28E-15	1 60E-04	3.30E-04	0 00E+00	0 00E+00	3.15E+07	0 00E+00
AM243	4 87E+01	11.5%	10%	32	6.19E+06	1.12E-05	1 81E-12	3 00E-05	9.74E-16	1.60E-04	3.30E-04	3.26E-05	1.21E+05	3.15E+07	1 95E-04
CM242	3 23E+01	11.5%	10%	32	6.19E+06	1.12E-05	1.81E-12	3 00E-05	6.46E-16	1.60E-04	3 30E-04	5 70E-07	2.11E+03	3.15E+07	2 26E-06
CM243	3 63E+01	11.5%	10%	32	6.19E+06	1.12E-05	1 81E-12	3 00E-05	7.26E-16	1.60E-04	3 30E-04	2.07E-05	7 66E+04	3.15E+07	9 24E-05
NP239	4 87E+01	11.5%	10%	32	6.19E+06	1.12E-05	1 81E-12	3 00E-05	9.74E-16	1 60E-04	3.30E-04	7 45E-11	2 76E-01	3.15E+07	4.46E-10
NP237	3 88E-01	11.5%	10%	32	6.19E+06	1.12E-05	1.81E-12	3 00E-05	7.76E-18	1 60E-04	3.30E-04	2 96E-05	1.10E+05	3.15E+07	1.41E-06
PU242	2 85E+00	11.5%	10%	32	6 19E+06	1.12E-05	1 81E-12	3 00E-05	5.70E-17	1 60E-04	3 30E-04	3 02E-05	1.12E+05	3.15E+07	1 06E-05
AM242	8 72E+00	11.5%	10%	32	6.19E+06	1.12E-05	1 81E-12	3 00E-05	1.74E-16	1.60E-04	3.30E-04	1.94E-09	7.18E+00	3.15E+07	2.08E-09
AM242M	8 76E+00	11.5%	10%	32	6.19E+06	1.12E-05	1 81E-12	3 00E-05	1.75E-16	1 60E-04	3.30E-04	3 21E-05	1.19E+05	3.15E+07	3 46E-05
														Total	7.34E-02

MPC-32															
Off-Normal Conditions															
Committed Effective Dose Equivalent From Inhalation															
Nuclide	Inventory (Ci/Assy)	% available for release	% remain airborne	No. Assy	MPC Vol (cm3)	L_{offnor} Rate at Upstream (cm3/s)	Fraction Released per sec	Release Fraction	Release Rate (Ci/sec)	X/Q (sec/m3)	Breathing Rate (m3/sec)	DCF (Sv/Bq)	DCF (mRem/uCi)	Occupancy Time (sec)	CDE (mRem)
Gases															
H 3	3 68E+02	11.5%	100%	32	6.19E+06	1.12E-05	1.81E-12	0 30	7.36E-10	1.60E-04	3.30E-04	1.73E-11	6.40E-02	3.15E+07	7.83E-05
I129	3 31E-02	11 5%	100%	32	6.19E+06	1 12E-05	1.81E-12	0.30	6 62E-14	1.60E-04	3 30E-04	2.09E-10	7 73E-01	3.15E+07	8 51E-08
KR 85	5 86E+03	11.5%	100%	32	6.19E+06	1.12E-05	1 81E-12	0 30	1 17E-08	1.60E-04	3 30E-04	0 00E+00	0 00E+00	3.15E+07	0.00E+00
Crud															
Co-60	2.18E+01	100 0%	100%	32	6.19E+06	1.12E-05	1 81E-12	0.15	1 89E-10	1 60E-04	3 30E-04	1 84E-08	6 81E+01	3 15E+07	2.14E-02
Volatiles															
SR 90	6 32E+04	11.5%	100%	32	6 19E+06	1.12E-05	1.81E-12	2 00E-04	8 42E-11	1 60E-04	3 30E-04	2 64E-09	9 77E+00	3 15E+07	1 37E-03
RU106	1 59E+04	11.5%	100%	32	6.19E+06	1 12E-05	1 81E-12	2 00E-04	2.12E-11	1.60E-04	3.30E-04	1.37E-08	5 07E+01	3.15E+07	1 79E-03
CS134	4 04E+04	11.5%	100%	32	6.19E+06	1.12E-05	1 81E-12	2 00E-04	5.38E-11	1 60E-04	3.30E-04	1 08E-08	4.00E+01	3 15E+07	3.58E-03
CS137	9 82E+04	11 5%	100%	32	6 19E+06	1.12E-05	1.81E-12	2 00E-04	1 31E-10	1.60E-04	3 30E-04	7.84E-09	2.90E+01	3.15E+07	6 31E-03
Fines															
PU241	8 53E+04	11.5%	10%	32	6.19E+06	1.12E-05	1.81E-12	3.00E-05	1.71E-12	1 60E-04	3 30E-04	3 06E-11	1.13E-01	3.15E+07	3 21E-07
Y 90	6.32E+04	11 5%	10%	32	6.19E+06	1.12E-05	1 81E-12	3.00E-05	1 26E-12	1.60E-04	3 30E-04	9 52E-12	3 52E-02	3 15E+07	7 40E-08
PM147	2 63E+04	11 5%	10%	32	6 19E+06	1.12E-05	1.81E-12	3 00E-05	5 26E-13	1.60E-04	3 30E-04	3.60E-14	1 33E-04	3.15E+07	1.16E-10
CE144	8 14E+03	11 5%	10%	32	6.19E+06	1.12E-05	1.81E-12	3 00E-05	1.63E-13	1.60E-04	3.30E-04	1.97E-09	7 29E+00	3.15E+07	1.97E-06
PR144	8.14E+03	11 5%	10%	32	6 19E+06	1.12E-05	1.81E-12	3.00E-05	1.63E-13	1 60E-04	3.30E-04	1 05E-14	3 89E-05	3.15E+07	1 05E-11
EU154	5 90E+03	11.5%	10%	32	6.19E+06	1.12E-05	1 81E-12	3 00E-05	1.18E-13	1 60E-04	3.30E-04	1 55E-08	5.74E+01	3 15E+07	1 12E-05
CM244	1 01E+04	11 5%	10%	32	6 19E+06	1.12E-05	1 81E-12	3.00E-05	2 02E-13	1 60E-04	3 30E-04	1 04E-09	3 85E+00	3.15E+07	1 29E-06
PU238	5 81E+03	11 5%	10%	32	6.19E+06	1.12E-05	1 81E-12	3.00E-05	1.16E-13	1.60E-04	3.30E-04	1.00E-09	3.70E+00	3.15E+07	7.15E-07
SB125	2 30E+03	11.5%	10%	32	6 19E+06	1.12E-05	1 81E-12	3 00E-05	4.60E-14	1 60E-04	3.30E-04	4.16E-10	1.54E+00	3.15E+07	1 18E-07
EU155	1 65E+03	11 5%	10%	32	6.19E+06	1.12E-05	1.81E-12	3 00E-05	3.30E-14	1 60E-04	3 30E-04	6.14E-10	2 27E+00	3.15E+07	1 25E-07
AM241	9 00E+02	11 5%	10%	32	6 19E+06	1.12E-05	1.81E-12	3 00E-05	1 80E-14	1.60E-04	3 30E-04	2.67E-09	9 88E+00	3.15E+07	2.96E-07
TE125M	5 61E+02	11.5%	10%	32	6.19E+06	1.12E-05	1 81E-12	3 00E-05	1.12E-14	1 60E-04	3 30E-04	1.07E-10	3 96E-01	3.15E+07	7.38E-09
PU240	4 05E+02	11.5%	10%	32	6.19E+06	1.12E-05	1 81E-12	3 00E-05	8.10E-15	1 60E-04	3 30E-04	9.51E-10	3 52E+00	3.15E+07	4.74E-08
SM151	3 38E+02	11 5%	10%	32	6.19E+06	1.12E-05	1 81E-12	3 00E-05	6.76E-15	1 60E-04	3 30E-04	1.49E-13	5 51E-04	3.15E+07	6 20E-12
PU239	2 04E+02	11 5%	10%	32	6 19E+06	1.12E-05	1.81E-12	3 00E-05	4 08E-15	1.60E-04	3.30E-04	9 22E-10	3.41E+00	3.15E+07	2.31E-08
BA137M	9 27E+04	11.5%	10%	32	6 19E+06	1.12E-05	1 81E-12	3 00E-05	1.85E-12	1.60E-04	3 30E-04	0 00E+00	0 00E+00	3.15E+07	0 00E+00
RH106	1 59E+04	11 5%	10%	32	6.19E+06	1.12E-05	1 81E-12	3.00E-05	3.18E-13	1.60E-04	3 30E-04	0.00E+00	0 00E+00	3 15E+07	0 00E+00
PR144M	1 14E+02	11 5%	10%	32	6 19E+06	1.12E-05	1.81E-12	3 00E-05	2.28E-15	1 60E-04	3.30E-04	0 00E+00	0.00E+00	3 15E+07	0 00E+00
AM243	4 87E+01	11 5%	10%	32	6.19E+06	1 12E-05	1 81E-12	3.00E-05	9.74E-16	1 60E-04	3 30E-04	1.52E-08	5.62E+01	3.15E+07	9.11E-08
CM242	3 23E+01	11.5%	10%	32	6 19E+06	1.12E-05	1 81E-12	3 00E-05	6.46E-16	1.60E-04	3 30E-04	9 44E-10	3.49E+00	3 15E+07	3 75E-09
CM243	3 63E+01	11 5%	10%	32	6 19E+06	1.12E-05	1.81E-12	3 00E-05	7.26E-16	1.60E-04	3.30E-04	6 29E-09	2 33E+01	3.15E+07	2 81E-08
NP239	4 87E+01	11 5%	10%	32	6 19E+06	1.12E-05	1.81E-12	3.00E-05	9 74E-16	1.60E-04	3 30E-04	1 63E-11	6 03E-02	3.15E+07	9 77E-11
NP237	3 88E-01	11 5%	10%	32	6 19E+06	1.12E-05	1.81E-12	3 00E-05	7.76E-18	1.60E-04	3 30E-04	1 69E-08	6 25E+01	3.15E+07	8 07E-10
PU242	2.85E+00	11.5%	10%	32	6.19E+06	1.12E-05	1.81E-12	3 00E-05	5.70E-17	1.60E-04	3 30E-04	9 45E-10	3.50E+00	3.15E+07	3 31E-10
AM242	8 72E+00	11 5%	10%	32	6.19E+06	1.12E-05	1 81E-12	3 00E-05	1.74E-16	1 60E-04	3 30E-04	2.94E-12	1.09E-02	3.15E+07	3 15E-12
AM242M	8 76E+00	11 5%	10%	32	6.19E+06	1.12E-05	1 81E-12	3.00E-05	1.75E-16	1 60E-04	3 30E-04	1.38E-09	5.11E+00	3.15E+07	1 49E-09
														Total	3 46E-02

MPC-32															
Off-Normal Conditions															
Committed Effective Dose Equivalent From Inhalation															
Nuclide	Inventory (Ci/Assy)	% available for release	% remain airborne	No. Assy	MPC Vol (cm3)	L_{offnor} Rate at Upstream (cm3/s)	Fraction Released per sec	Release Fraction	Release Rate (Ci/sec)	X/Q (sec/m3)	Breathing Rate (m3/sec)	DCF (Sv/Bq)	DCF (mRem/uCi)	Occupancy Time (sec)	CDE (mRem)
Gases															
H 3	3 68E+02	11.5%	100%	32	6.19E+06	1.12E-05	1 81E-12	0 30	7.36E-10	1 60E-04	3 30E-04	1.73E-11	6 40E-02	3.15E+07	7.83E-05
I129	3 31E-02	11 5%	100%	32	6.19E+06	1.12E-05	1 81E-12	0 30	6 62E-14	1.60E-04	3.30E-04	3.14E-10	1.16E+00	3.15E+07	1.28E-07
KR 85	5 86E+03	11.5%	100%	32	6.19E+06	1.12E-05	1.81E-12	0 30	1.17E-08	1.60E-04	3.30E-04	0 00E+00	0 00E+00	3.15E+07	0.00E+00
Crud															
Co-60	2.18E+01	100 0%	100%	32	6.19E+06	1.12E-05	1.81E-12	0 15	1.89E-10	1 60E-04	3.30E-04	3 45E-07	1 28E+03	3.15E+07	4 02E-01
Volatiles															
SR 90	6.32E+04	11.5%	100%	32	6 19E+06	1.12E-05	1 81E-12	2.00E-04	8 42E-11	1.60E-04	3 30E-04	2 86E-06	1 06E+04	3.15E+07	1.48E+00
RU106	1 59E+04	11.5%	100%	32	6.19E+06	1.12E-05	1 81E-12	2.00E-04	2.12E-11	1.60E-04	3 30E-04	1 04E-06	3 85E+03	3.15E+07	1.36E-01
CS134	4 04E+04	11 5%	100%	32	6.19E+06	1.12E-05	1.81E-12	2 00E-04	5.38E-11	1.60E-04	3.30E-04	1.18E-08	4.37E+01	3.15E+07	3 91E-03
CS137	9 82E+04	11.5%	100%	32	6.19E+06	1.12E-05	1 81E-12	2.00E-04	1.31E-10	1 60E-04	3.30E-04	8 82E-09	3 26E+01	3.15E+07	7.10E-03
Fines															
PU241	8 53E+04	11.5%	10%	32	6.19E+06	1.12E-05	1.81E-12	3.00E-05	1.71E-12	1 60E-04	3 30E-04	3 18E-06	1.18E+04	3.15E+07	3 34E-02
Y 90	6.32E+04	11 5%	10%	32	6.19E+06	1.12E-05	1.81E-12	3.00E-05	1.26E-12	1 60E-04	3 30E-04	9 31E-09	3.44E+01	3.15E+07	7.24E-05
PM147	2.63E+04	11.5%	10%	32	6.19E+06	1.12E-05	1 81E-12	3 00E-05	5 26E-13	1.60E-04	3 30E-04	7.74E-08	2 86E+02	3.15E+07	2 50E-04
CE144	8 14E+03	11.5%	10%	32	6.19E+06	1.12E-05	1 81E-12	3.00E-05	1.63E-13	1 60E-04	3 30E-04	7 91E-07	2 93E+03	3.15E+07	7 92E-04
PR144	8.14E+03	11 5%	10%	32	6 19E+06	1.12E-05	1 81E-12	3 00E-05	1.63E-13	1 60E-04	3.30E-04	9 40E-11	3 48E-01	3.15E+07	9.41E-08
EU154	5 90E+03	11.5%	10%	32	6.19E+06	1.12E-05	1.81E-12	3 00E-05	1.18E-13	1 60E-04	3.30E-04	7.92E-08	2 93E+02	3.15E+07	5.75E-05
CM244	1.01E+04	11.5%	10%	32	6.19E+06	1.12E-05	1 81E-12	3 00E-05	2.02E-13	1 60E-04	3 30E-04	1 93E-05	7.14E+04	3.15E+07	2 40E-02
PU238	5 81E+03	11 5%	10%	32	6 19E+06	1.12E-05	1 81E-12	3 00E-05	1.16E-13	1.60E-04	3.30E-04	3 20E-04	1.18E+06	3.15E+07	2 29E-01
SB125	2 30E+03	11.5%	10%	32	6.19E+06	1.12E-05	1 81E-12	3 00E-05	4.60E-14	1 60E-04	3 30E-04	2.17E-08	8 03E+01	3.15E+07	6 14E-06
EU155	1 65E+03	11.5%	10%	32	6.19E+06	1.12E-05	1 81E-12	3 00E-05	3.30E-14	1.60E-04	3.30E-04	1.19E-08	4.40E+01	3 15E+07	2 42E-06
AM241	9 00E+02	11.5%	10%	32	6.19E+06	1.12E-05	1 81E-12	3 00E-05	1 80E-14	1.60E-04	3.30E-04	1.84E-05	6.81E+04	3.15E+07	2.04E-03
TE125M	5 61E+02	11.5%	10%	32	6 19E+06	1.12E-05	1.81E-12	3.00E-05	1.12E-14	1.60E-04	3 30E-04	1 04E-08	3 85E+01	3.15E+07	7.18E-07
PU240	4 05E+02	11 5%	10%	32	6.19E+06	1.12E-05	1 81E-12	3 00E-05	8.10E-15	1.60E-04	3 30E-04	3.23E-04	1.20E+06	3.15E+07	1.61E-02
SM151	3 38E+02	11.5%	10%	32	6.19E+06	1.12E-05	1 81E-12	3 00E-05	6.76E-15	1 60E-04	3 30E-04	3 26E-09	1.21E+01	3.15E+07	1.36E-07
PU239	2 04E+02	11.5%	10%	32	6.19E+06	1.12E-05	1 81E-12	3.00E-05	4 08E-15	1 60E-04	3 30E-04	3 23E-04	1.20E+06	3.15E+07	8.11E-03
BA137M	9 27E+04	11.5%	10%	32	6.19E+06	1.12E-05	1 81E-12	3.00E-05	1.85E-12	1 60E-04	3 30E-04	0 00E+00	0.00E+00	3.15E+07	0 00E+00
RH106	1 59E+04	11.5%	10%	32	6.19E+06	1.12E-05	1 81E-12	3.00E-05	3.18E-13	1.60E-04	3 30E-04	0 00E+00	0.00E+00	3.15E+07	0 00E+00
PR144M	1.14E+02	11.5%	10%	32	6.19E+06	1.12E-05	1.81E-12	3 00E-05	2.28E-15	1.60E-04	3.30E-04	0 00E+00	0 00E+00	3.15E+07	0 00E+00
AM243	4 87E+01	11.5%	10%	32	6.19E+06	1.12E-05	1.81E-12	3 00E-05	9.74E-16	1.60E-04	3 30E-04	1.78E-05	6 59E+04	3.15E+07	1 07E-04
CM242	3 23E+01	11.5%	10%	32	6.19E+06	1.12E-05	1.81E-12	3.00E-05	6 46E-16	1 60E-04	3.30E-04	1.55E-05	5.74E+04	3.15E+07	6 16E-05
CM243	3 63E+01	11.5%	10%	32	6.19E+06	1.12E-05	1 81E-12	3.00E-05	7.26E-16	1.60E-04	3 30E-04	1 94E-05	7.18E+04	3.15E+07	8 66E-05
NP239	4.87E+01	11.5%	10%	32	6.19E+06	1.12E-05	1 81E-12	3 00E-05	9.74E-16	1 60E-04	3 30E-04	2 36E-09	8.73E+00	3 15E+07	1.41E-08
NP237	3 88E-01	11 5%	10%	32	6.19E+06	1.12E-05	1.81E-12	3 00E-05	7.76E-18	1.60E-04	3.30E-04	1 61E-05	5 96E+04	3 15E+07	7 68E-07
PU242	2 85E+00	11 5%	10%	32	6.19E+06	1.12E-05	1 81E-12	3.00E-05	5 70E-17	1 60E-04	3 30E-04	3 07E-04	1.14E+06	3 15E+07	1 08E-04
AM242	8 72E+00	11 5%	10%	32	6.19E+06	1.12E-05	1 81E-12	3 00E-05	1.74E-16	1 60E-04	3 30E-04	5 20E-08	1.92E+02	3.15E+07	5.58E-08
AM242M	8 76E+00	11 5%	10%	32	6.19E+06	1 12E-05	1 81E-12	3 00E-05	1.75E-16	1 60E-04	3 30E-04	4.20E-06	1 55E+04	3.15E+07	4 53E-06
														Total	2.34E+00

MPC-32															
Off-Normal Conditions															
Committed Effective Dose Equivalent From Inhalation															
Nuclide	Inventory (Ci/Assy)	% available for release	% remain airborne	No. Assy	MPC Vol (cm3)	L_{offnor} Rate at Upstream (cm3/s)	Fraction Released per sec	Release Fraction	Release Rate (Ci/sec)	X/Q (sec/m3)	Breathing Rate (m3/sec)	DCF (Sv/Bq)	DCF (mRem/uCi)	Occupancy Time (sec)	CDE (mRem)
Gases															
H 3	3 68E+02	11 5%	100%	32	6 19E+06	1.12E-05	1 81E-12	0 30	7 36E-10	1.60E-04	3.30E-04	1.73E-11	6.40E-02	3.15E+07	7 83E-05
I129	3 31E-02	11.5%	100%	32	6.19E+06	1 12E-05	1.81E-12	0 30	6.62E-14	1 60E-04	3 30E-04	1.40E-10	5.18E-01	3.15E+07	5.70E-08
KR 85	5 86E+03	11 5%	100%	32	6.19E+06	1.12E-05	1 81E-12	0.30	1.17E-08	1.60E-04	3 30E-04	0 00E+00	0 00E+00	3 15E+07	0 00E+00
Crud															
Co-60	2.18E+01	100 0%	100%	32	6.19E+06	1.12E-05	1.81E-12	0 15	1.89E-10	1 60E-04	3 30E-04	1 72E-08	6.36E+01	3.15E+07	2 00E-02
Volatiles															
SR 90	6.32E+04	11.5%	100%	32	6.19E+06	1.12E-05	1.81E-12	2.00E-04	8.42E-11	1 60E-04	3.30E-04	3 36E-07	1.24E+03	3.15E+07	1.74E-01
RU106	1 59E+04	11.5%	100%	32	6.19E+06	1.12E-05	1.81E-12	2.00E-04	2.12E-11	1 60E-04	3.30E-04	1.37E-08	5 07E+01	3.15E+07	1 79E-03
CS134	4 04E+04	11 5%	100%	32	6.19E+06	1.12E-05	1.81E-12	2.00E-04	5 38E-11	1.60E-04	3 30E-04	1.18E-08	4.37E+01	3.15E+07	3.91E-03
CS137	9.82E+04	11 5%	100%	32	6.19E+06	1.12E-05	1.81E-12	2 00E-04	1 31E-10	1 60E-04	3 30E-04	8 30E-09	3.07E+01	3 15E+07	6 68E-03
Fines															
PU241	8 53E+04	11.5%	10%	32	6.19E+06	1.12E-05	1 81E-12	3 00E-05	1.71E-12	1.60E-04	3 30E-04	3.36E-06	1 24E+04	3.15E+07	3.53E-02
Y 90	6 32E+04	11.5%	10%	32	6.19E+06	1.12E-05	1.81E-12	3 00E-05	1 26E-12	1 60E-04	3 30E-04	2.79E-10	1.03E+00	3.15E+07	2.17E-06
PM147	2 63E+04	11 5%	10%	32	6 19E+06	1 12E-05	1.81E-12	3 00E-05	5.26E-13	1 60E-04	3 30E-04	8 16E-09	3 02E+01	3.15E+07	2 64E-05
CE144	8 14E+03	11 5%	10%	32	6 19E+06	1 12E-05	1.81E-12	3 00E-05	1 63E-13	1 60E-04	3 30E-04	2 67E-08	9.88E+01	3.15E+07	2 67E-05
PR144	8 14E+03	11.5%	10%	32	6 19E+06	1.12E-05	1.81E-12	3 00E-05	1 63E-13	1.60E-04	3 30E-04	8 08E-14	2 99E-04	3.15E+07	8 09E-11
EU154	5 90E+03	11.5%	10%	32	6.19E+06	1.12E-05	1 81E-12	3 00E-05	1.18E-13	1.60E-04	3 30E-04	1.06E-07	3 92E+02	3.15E+07	7 69E-05
CM244	1 01E+04	11 5%	10%	32	6 19E+06	1.12E-05	1 81E-12	3.00E-05	2 02E-13	1.60E-04	3 30E-04	9 38E-05	3.47E+05	3 15E+07	1 17E-01
PU238	5 81E+03	11 5%	10%	32	6 19E+06	1.12E-05	1 81E-12	3 00E-05	1.16E-13	1 60E-04	3.30E-04	1.52E-04	5 62E+05	3.15E+07	1 09E-01
SB125	2 30E+03	11.5%	10%	32	6.19E+06	1.12E-05	1 81E-12	3 00E-05	4 60E-14	1.60E-04	3 30E-04	6 49E-10	2.40E+00	3.15E+07	1 84E-07
EU155	1 65E+03	11.5%	10%	32	6 19E+06	1.12E-05	1 81E-12	3.00E-05	3.30E-14	1.60E-04	3 30E-04	1.43E-08	5 29E+01	3.15E+07	2.90E-06
AM241	9 00E+02	11 5%	10%	32	6 19E+06	1.12E-05	1 81E-12	3.00E-05	1 80E-14	1.60E-04	3 30E-04	1 74E-04	6 44E+05	3.15E+07	1 93E-02
TE125M	5.61E+02	11 5%	10%	32	6.19E+06	1.12E-05	1 81E-12	3 00E-05	1.12E-14	1 60E-04	3 30E-04	3 01E-09	1.11E+01	3.15E+07	2 08E-07
PU240	4 05E+02	11 5%	10%	32	6.19E+06	1.12E-05	1.81E-12	3.00E-05	8 10E-15	1.60E-04	3 30E-04	1.69E-04	6 25E+05	3.15E+07	8.42E-03
SM151	3.38E+02	11 5%	10%	32	6 19E+06	1.12E-05	1 81E-12	3.00E-05	6.76E-15	1 60E-04	3.30E-04	1 10E-08	4.07E+01	3 15E+07	4.57E-07
PU239	2 04E+02	11.5%	10%	32	6.19E+06	1.12E-05	1 81E-12	3 00E-05	4 08E-15	1.60E-04	3 30E-04	1.69E-04	6 25E+05	3.15E+07	4 24E-03
BA137M	9 27E+04	11.5%	10%	32	6.19E+06	1.12E-05	1 81E-12	3 00E-05	1.85E-12	1 60E-04	3.30E-04	0 00E+00	0 00E+00	3.15E+07	0.00E+00
RH106	1 59E+04	11 5%	10%	32	6 19E+06	1.12E-05	1 81E-12	3.00E-05	3.18E-13	1.60E-04	3 30E-04	0.00E+00	0 00E+00	3 15E+07	0 00E+00
PR144M	1 14E+02	11.5%	10%	32	6 19E+06	1.12E-05	1 81E-12	3.00E-05	2 28E-15	1 60E-04	3 30E-04	0 00E+00	0 00E+00	3.15E+07	0 00E+00
AM243	4 87E+01	11.5%	10%	32	6 19E+06	1.12E-05	1 81E-12	3 00E-05	9 74E-16	1 60E-04	3 30E-04	1 73E-04	6 40E+05	3.15E+07	1 04E-03
CM242	3 23E+01	11 5%	10%	32	6 19E+06	1.12E-05	1 81E-12	3 00E-05	6 46E-16	1 60E-04	3 30E-04	3 90E-06	1 44E+04	3 15E+07	1.55E-05
CM243	3 63E+01	11 5%	10%	32	6.19E+06	1.12E-05	1 81E-12	3 00E-05	7 26E-16	1 60E-04	3.30E-04	1.18E-04	4 37E+05	3 15E+07	5.27E-04
NP239	4 87E+01	11.5%	10%	32	6.19E+06	1.12E-05	1 81E-12	3.00E-05	9.74E-16	1 60E-04	3 30E-04	2 08E-10	7.70E-01	3 15E+07	1 25E-09
NP237	3 88E-01	11 5%	10%	32	6.19E+06	1.12E-05	1 81E-12	3 00E-05	7.76E-18	1 60E-04	3 30E-04	2.62E-04	9 69E+05	3 15E+07	1.25E-05
PU242	2 85E+00	11 5%	10%	32	6 19E+06	1 12E-05	1.81E-12	3 00E-05	5 70E-17	1.60E-04	3 30E-04	1.61E-04	5 96E+05	3.15E+07	5 64E-05
AM242	8 72E+00	11 5%	10%	32	6 19E+06	1.12E-05	1.81E-12	3 00E-05	1.74E-16	1 60E-04	3 30E-04	1.32E-08	4 88E+01	3.15E+07	1 42E-08
AM242M	8 76E+00	11 5%	10%	32	6.19E+06	1.12E-05	1.81E-12	3 00E-05	1.75E-16	1.60E-04	3 30E-04	1 69E-04	6 25E+05	3.15E+07	1 82E-04
														Total	5 01E-01

MPC-32															
Off-Normal Conditions															
Committed Effective Dose Equivalent From Inhalation															
Nuclide	Inventory (Ci/Assy)	% available for release	% remain airborne	No. Assy	MPC Vol (cm3)	L_{offnor} Rate at Upstream (cm3/s)	Fraction Released per sec	Release Fraction	Release Rate (Ci/sec)	X/Q (sec/m3)	Breathing Rate (m3/sec)	DCF (Sv/Bq)	DCF (mRem/uCi)	Occupancy Time (sec)	CDE (mRem)
Gases															
H 3	3 68E+02	11.5%	100%	32	6.19E+06	1.12E-05	1.81E-12	0 30	7.36E-10	1 60E-04	3 30E-04	1.73E-11	6 40E-02	3.15E+07	7.83E-05
I129	3 31E-02	11 5%	100%	32	6.19E+06	1.12E-05	1.81E-12	0 30	6 62E-14	1.60E-04	3.30E-04	1.38E-10	5.11E-01	3.15E+07	5.62E-08
KR 85	5 86E+03	11 5%	100%	32	6.19E+06	1 12E-05	1 81E-12	0 30	1.17E-08	1.60E-04	3.30E-04	0.00E+00	0 00E+00	3 15E+07	0 00E+00
Crud															
Co-60	2.18E+01	100 0%	100%	32	6.19E+06	1.12E-05	1.81E-12	0.15	1.89E-10	1.60E-04	3.30E-04	1.35E-08	5 00E+01	3.15E+07	1 57E-02
Volatiles															
SR 90	6 32E+04	11.5%	100%	32	6 19E+06	1.12E-05	1.81E-12	2 00E-04	8.42E-11	1.60E-04	3.30E-04	7.27E-07	2.69E+03	3.15E+07	3.77E-01
RU106	1.59E+04	11.5%	100%	32	6 19E+06	1.12E-05	1.81E-12	2 00E-04	2.12E-11	1.60E-04	3.30E-04	1.37E-08	5 07E+01	3.15E+07	1.79E-03
CS134	4 04E+04	11.5%	100%	32	6 19E+06	1.12E-05	1 81E-12	2 00E-04	5.38E-11	1.60E-04	3 30E-04	1.10E-08	4 07E+01	3.15E+07	3 64E-03
CS137	9.82E+04	11.5%	100%	32	6.19E+06	1.12E-05	1 81E-12	2.00E-04	1.31E-10	1 60E-04	3 30E-04	7 94E-09	2 94E+01	3.15E+07	6.39E-03
Fines															
PU241	8 53E+04	11.5%	10%	32	6.19E+06	1.12E-05	1 81E-12	3 00E-05	1.71E-12	1.60E-04	3 30E-04	4 20E-05	1.55E+05	3.15E+07	4.41E-01
Y 90	6 32E+04	11.5%	10%	32	6.19E+06	1.12E-05	1 81E-12	3 00E-05	1.26E-12	1 60E-04	3 30E-04	2.78E-10	1 03E+00	3.15E+07	2.16E-06
PM147	2 63E+04	11.5%	10%	32	6.19E+06	1.12E-05	1 81E-12	3 00E-05	5.26E-13	1 60E-04	3 30E-04	1 02E-07	3 77E+02	3.15E+07	3.30E-04
CE144	8.14E+03	11.5%	10%	32	6.19E+06	1.12E-05	1 81E-12	3 00E-05	1.63E-13	1 60E-04	3.30E-04	4 54E-08	1 68E+02	3.15E+07	4.55E-05
PR144	8 14E+03	11.5%	10%	32	6.19E+06	1.12E-05	1 81E-12	3 00E-05	1.63E-13	1.60E-04	3 30E-04	1.35E-13	5 00E-04	3.15E+07	1.35E-10
EU154	5 90E+03	11 5%	10%	32	6.19E+06	1.12E-05	1.81E-12	3 00E-05	1.18E-13	1.60E-04	3 30E-04	5 23E-07	1 94E+03	3.15E+07	3 80E-04
CM244	1 01E+04	11.5%	10%	32	6.19E+06	1.12E-05	1 81E-12	3 00E-05	2.02E-13	1 60E-04	3.30E-04	1.17E-03	4 33E+06	3.15E+07	1.45E+00
PU238	5 81E+03	11 5%	10%	32	6.19E+06	1.12E-05	1 81E-12	3 00E-05	1.16E-13	1 60E-04	3.30E-04	1.90E-03	7.03E+06	3.15E+07	1.36E+00
SB125	2 30E+03	11 5%	10%	32	6.19E+06	1.12E-05	1.81E-12	3 00E-05	4.60E-14	1.60E-04	3 30E-04	2.73E-09	1 01E+01	3.15E+07	7.72E-07
EU155	1 65E+03	11 5%	10%	32	6 19E+06	1.12E-05	1.81E-12	3.00E-05	3.30E-14	1.60E-04	3.30E-04	1 52E-07	5 62E+02	3.15E+07	3 09E-05
AM241	9 00E+02	11 5%	10%	32	6.19E+06	1.12E-05	1.81E-12	3 00E-05	1.80E-14	1 60E-04	3 30E-04	2.17E-03	8.03E+06	3.15E+07	2.40E-01
TE125M	5 61E+02	11.5%	10%	32	6 19E+06	1.12E-05	1.81E-12	3 00E-05	1.12E-14	1 60E-04	3.30E-04	3 21E-08	1.19E+02	3.15E+07	2.21E-06
PU240	4.05E+02	11.5%	10%	32	6.19E+06	1.12E-05	1.81E-12	3 00E-05	8.10E-15	1 60E-04	3.30E-04	2.11E-03	7.81E+06	3.15E+07	1.05E-01
SM151	3 38E+02	11 5%	10%	32	6.19E+06	1.12E-05	1.81E-12	3 00E-05	6.76E-15	1.60E-04	3.30E-04	1.38E-07	5.11E+02	3.15E+07	5 74E-06
PU239	2 04E+02	11 5%	10%	32	6.19E+06	1.12E-05	1.81E-12	3 00E-05	4.08E-15	1 60E-04	3 30E-04	2.11E-03	7.81E+06	3.15E+07	5.30E-02
BA137M	9 27E+04	11.5%	10%	32	6.19E+06	1.12E-05	1.81E-12	3 00E-05	1.85E-12	1 60E-04	3.30E-04	0 00E+00	0 00E+00	3.15E+07	0 00E+00
RH106	1 59E+04	11 5%	10%	32	6.19E+06	1.12E-05	1.81E-12	3.00E-05	3.18E-13	1.60E-04	3.30E-04	0 00E+00	0 00E+00	3.15E+07	0 00E+00
PR144M	1.14E+02	11 5%	10%	32	6.19E+06	1.12E-05	1.81E-12	3 00E-05	2.28E-15	1 60E-04	3.30E-04	0.00E+00	0 00E+00	3 15E+07	0 00E+00
AM243	4 87E+01	11 5%	10%	32	6.19E+06	1.12E-05	1 81E-12	3 00E-05	9 74E-16	1 60E-04	3.30E-04	2.17E-03	8 03E+06	3.15E+07	1 30E-02
CM242	3.23E+01	11 5%	10%	32	6.19E+06	1.12E-05	1.81E-12	3.00E-05	6.46E-16	1 60E-04	3.30E-04	4.87E-05	1 80E+05	3.15E+07	1 94E-04
CM243	3 63E+01	11.5%	10%	32	6 19E+06	1.12E-05	1 81E-12	3 00E-05	7.26E-16	1 60E-04	3.30E-04	1.47E-03	5 44E+06	3 15E+07	6 56E-03
NP239	4 87E+01	11.5%	10%	32	6.19E+06	1.12E-05	1 81E-12	3 00E-05	9.74E-16	1.60E-04	3 30E-04	2 03E-09	7 51E+00	3.15E+07	1.22E-08
NP237	3 88E-01	11.5%	10%	32	6.19E+06	1.12E-05	1.81E-12	3 00E-05	7.76E-18	1.60E-04	3 30E-04	3 27E-03	1.21E+07	3.15E+07	1 56E-04
PU242	2 85E+00	11 5%	10%	32	6.19E+06	1.12E-05	1 81E-12	3 00E-05	5.70E-17	1 60E-04	3.30E-04	2 01E-03	7 44E+06	3 15E+07	7 05E-04
AM242	8 72E+00	11 5%	10%	32	6.19E+06	1.12E-05	1 81E-12	3 00E-05	1.74E-16	1.60E-04	3 30E-04	1.65E-07	6.11E+02	3.15E+07	1.77E-07
AM242M	8.76E+00	11 5%	10%	32	6.19E+06	1.12E-05	1 81E-12	3.00E-05	1.75E-16	1.60E-04	3.30E-04	2 12E-03	7.84E+06	3.15E+07	2.28E-03
														Total	4.08E+00

MPC-32															
Off-Normal Conditions															
Committed Effective Dose Equivalent From Inhalation															
Nuclide	Inventory (Ci/Assy)	% available for release	% remain airborne	No. Assy	MPC Vol (cm3)	L_{offnor} Rate at Upstream (cm3/s)	Fraction Released per sec	Release Fraction	Release Rate (Ci/sec)	X/Q (sec/m3)	Breathing Rate (m3/sec)	DCF (Sv/Bq)	DCF (mRem/uCi)	Occupancy Time (sec)	CDE (mRem)
Gases															
H 3	3 68E+02	11 5%	100%	32	6 19E+06	1.12E-05	1 81E-12	0 30	7.36E-10	1 60E-04	3.30E-04	1 73E-11	6.40E-02	3 15E+07	7 83E-05
I129	3 31E-02	11 5%	100%	32	6.19E+06	1 12E-05	1.81E-12	0 30	6.62E-14	1 60E-04	3.30E-04	1.56E-06	5 77E+03	3.15E+07	6 35E-04
KR 85	5.86E+03	11 5%	100%	32	6.19E+06	1.12E-05	1.81E-12	0.30	1.17E-08	1 60E-04	3.30E-04	0 00E+00	0 00E+00	3 15E+07	0 00E+00
Crud															
Co-60	2.18E+01	100 0%	100%	32	6.19E+06	1.12E-05	1 81E-12	0.15	1 89E-10	1.60E-04	3 30E-04	1.62E-08	5 99E+01	3.15E+07	1.89E-02
Volatiles															
SR 90	6 32E+04	11 5%	100%	32	6.19E+06	1.12E-05	1.81E-12	2 00E-04	8.42E-11	1 60E-04	3 30E-04	2 64E-09	9 77E+00	3.15E+07	1.37E-03
RU106	1 59E+04	11.5%	100%	32	6.19E+06	1.12E-05	1.81E-12	2.00E-04	2.12E-11	1 60E-04	3.30E-04	1.37E-08	5 07E+01	3.15E+07	1 79E-03
CS134	4 04E+04	11 5%	100%	32	6.19E+06	1.12E-05	1.81E-12	2.00E-04	5 38E-11	1.60E-04	3 30E-04	1.11E-08	4 11E+01	3.15E+07	3 68E-03
CS137	9 82E+04	11.5%	100%	32	6.19E+06	1.12E-05	1.81E-12	2 00E-04	1.31E-10	1 60E-04	3 30E-04	7.93E-09	2 93E+01	3 15E+07	6 39E-03
Fines															
PU241	8 53E+04	11 5%	10%	32	6.19E+06	1.12E-05	1 81E-12	3.00E-05	1.71E-12	1.60E-04	3.30E-04	1.24E-11	4 59E-02	3.15E+07	1 30E-07
Y 90	6 32E+04	11.5%	10%	32	6 19E+06	1.12E-05	1 81E-12	3 00E-05	1.26E-12	1 60E-04	3 30E-04	9 52E-12	3 52E-02	3.15E+07	7.40E-08
PM147	2 63E+04	11.5%	10%	32	6.19E+06	1.12E-05	1 81E-12	3.00E-05	5 26E-13	1 60E-04	3 30E-04	1.98E-14	7 33E-05	3.15E+07	6 41E-11
CE144	8.14E+03	11 5%	10%	32	6.19E+06	1.12E-05	1 81E-12	3 00E-05	1.63E-13	1.60E-04	3.30E-04	1.88E-09	6.96E+00	3 15E+07	1.88E-06
PR144	8.14E+03	11 5%	10%	32	6 19E+06	1.12E-05	1 81E-12	3 00E-05	1.63E-13	1.60E-04	3.30E-04	8 47E-15	3.13E-05	3.15E+07	8 48E-12
EU154	5.90E+03	11 5%	10%	32	6.19E+06	1 12E-05	1 81E-12	3.00E-05	1.18E-13	1 60E-04	3.30E-04	7 14E-09	2 64E+01	3 15E+07	5.18E-06
CM244	1 01E+04	11 5%	10%	32	6 19E+06	1 12E-05	1.81E-12	3.00E-05	2 02E-13	1.60E-04	3.30E-04	1.01E-09	3 74E+00	3.15E+07	1 25E-06
PU238	5 81E+03	11.5%	10%	32	6.19E+06	1.12E-05	1 81E-12	3 00E-05	1.16E-13	1 60E-04	3.30E-04	9 62E-10	3.56E+00	3 15E+07	6.88E-07
SB125	2 30E+03	11.5%	10%	32	6.19E+06	1.12E-05	1 81E-12	3.00E-05	4 60E-14	1 60E-04	3.30E-04	3 24E-10	1.20E+00	3 15E+07	9 16E-08
EU155	1.65E+03	11.5%	10%	32	6.19E+06	1.12E-05	1.81E-12	3.00E-05	3.30E-14	1.60E-04	3 30E-04	2 40E-10	8.88E-01	3.15E+07	4 87E-08
AM241	9.00E+02	11 5%	10%	32	6.19E+06	1 12E-05	1 81E-12	3 00E-05	1 80E-14	1 60E-04	3.30E-04	1 60E-09	5 92E+00	3 15E+07	1.77E-07
TE125M	5 61E+02	11.5%	10%	32	6.19E+06	1.12E-05	1 81E-12	3 00E-05	1.12E-14	1.60E-04	3 30E-04	9 93E-11	3 67E-01	3.15E+07	6 85E-09
PU240	4 05E+02	11.5%	10%	32	6.19E+06	1.12E-05	1.81E-12	3 00E-05	8.10E-15	1 60E-04	3.30E-04	9 05E-10	3 35E+00	3.15E+07	4 51E-08
SM151	3 38E+02	11.5%	10%	32	6.19E+06	1.12E-05	1 81E-12	3 00E-05	6.76E-15	1.60E-04	3 30E-04	1 32E-14	4 88E-05	3.15E+07	5 49E-13
PU239	2 04E+02	11 5%	10%	32	6.19E+06	1.12E-05	1 81E-12	3.00E-05	4 08E-15	1 60E-04	3 30E-04	9 03E-10	3 34E+00	3.15E+07	2 27E-08
BA137M	9 27E+04	11.5%	10%	32	6.19E+06	1.12E-05	1 81E-12	3 00E-05	1.85E-12	1.60E-04	3 30E-04	0 00E+00	0 00E+00	3.15E+07	0 00E+00
RH106	1 59E+04	11 5%	10%	32	6.19E+06	1.12E-05	1 81E-12	3 00E-05	3.18E-13	1 60E-04	3.30E-04	0.00E+00	0.00E+00	3.15E+07	0.00E+00
PR144M	1.14E+02	11 5%	10%	32	6.19E+06	1.12E-05	1 81E-12	3 00E-05	2.28E-15	1 60E-04	3 30E-04	0 00E+00	0 00E+00	3.15E+07	0 00E+00
AM243	4 87E+01	11 5%	10%	32	6.19E+06	1 12E-05	1.81E-12	3 00E-05	9 74E-16	1 60E-04	3.30E-04	8.29E-09	3 07E+01	3 15E+07	4.97E-08
CM242	3 23E+01	11 5%	10%	32	6.19E+06	1 12E-05	1 81E-12	3.00E-05	6 46E-16	1 60E-04	3.30E-04	9 41E-10	3.48E+00	3 15E+07	3 74E-09
CM243	3.63E+01	11 5%	10%	32	6.19E+06	1.12E-05	1 81E-12	3 00E-05	7 26E-16	1.60E-04	3 30E-04	3.83E-09	1 42E+01	3.15E+07	1.71E-08
NP239	4 87E+01	11 5%	10%	32	6 19E+06	1.12E-05	1.81E-12	3 00E-05	9 74E-16	1 60E-04	3.30E-04	7 62E-12	2 82E-02	3 15E+07	4 57E-11
NP237	3 88E-01	11.5%	10%	32	6.19E+06	1.12E-05	1 81E-12	3 00E-05	7.76E-18	1 60E-04	3 30E-04	1.34E-08	4 96E+01	3 15E+07	6 40E-10
PU242	2 85E+00	11 5%	10%	32	6 19E+06	1.12E-05	1 81E-12	3 00E-05	5 70E-17	1 60E-04	3.30E-04	8 79E-10	3 25E+00	3.15E+07	3 08E-10
AM242	8.72E+00	11.5%	10%	32	6.19E+06	1.12E-05	1 81E-12	3 00E-05	1.74E-16	1.60E-04	3 30E-04	2 52E-12	9 32E-03	3.15E+07	2 70E-12
AM242M	8.76E+00	11 5%	10%	32	6.19E+06	1.12E-05	1 81E-12	3 00E-05	1.75E-16	1 60E-04	3.30E-04	5 64E-10	2 09E+00	3.15E+07	6 08E-10
														Total	3 28E-02

MPC-32															
Off-Normal Conditions															
Committed Effective Dose Equivalent From Inhalation															
Nuclide	Inventory (Ci/Assy)	% available for release	% remain airborne	No. Assy	MPC Vol (cm3)	L_{offnor} Rate at Upstream (cm3/s)	Fraction Released per sec	Release Fraction	Release Rate (Ci/sec)	X/Q (sec/m3)	Breathing Rate (m3/sec)	DCF (Sv/Bq)	DCF (mRem/uCi)	Occupancy Time (sec)	CEDE (mRem)
Gases															
H 3	3 68E+02	11.5%	100%	32	6.19E+06	1.12E-05	1.81E-12	0 30	7.36E-10	1.60E-04	3.30E-04	1.73E-11	6 40E-02	3.15E+07	7 83E-05
I129	3 31E-02	11 5%	100%	32	6.19E+06	1.12E-05	1.81E-12	0 30	6 62E-14	1.60E-04	3.30E-04	4 69E-08	1 74E+02	3.15E+07	1.91E-05
KR 85	5.86E+03	11.5%	100%	32	6 19E+06	1.12E-05	1 81E-12	0 30	1.17E-08	1 60E-04	3.30E-04	0 00E+00	0.00E+00	3.15E+07	0 00E+00
Crud															
Co-60	2.18E+01	100 0%	100%	32	6.19E+06	1.12E-05	1.81E-12	0.15	1.89E-10	1.60E-04	3.30E-04	5 91E-08	2.19E+02	3.15E+07	6 88E-02
Volatiles															
SR 90	6.32E+04	11.5%	100%	32	6.19E+06	1.12E-05	1.81E-12	2 00E-04	8.42E-11	1.60E-04	3.30E-04	3 51E-07	1 30E+03	3.15E+07	1.82E-01
RU106	1 59E+04	11 5%	100%	32	6.19E+06	1.12E-05	1 81E-12	2 00E-04	2.12E-11	1 60E-04	3 30E-04	1.29E-07	4.77E+02	3.15E+07	1 68E-02
CS134	4 04E+04	11.5%	100%	32	6.19E+06	1.12E-05	1.81E-12	2 00E-04	5.38E-11	1.60E-04	3.30E-04	1.25E-08	4 63E+01	3 15E+07	4.14E-03
CS137	9 82E+04	11.5%	100%	32	6 19E+06	1.12E-05	1 81E-12	2 00E-04	1.31E-10	1 60E-04	3.30E-04	8 63E-09	3.19E+01	3.15E+07	6 95E-03
Fines															
PU241	8 53E+04	11 5%	10%	32	6.19E+06	1.12E-05	1 81E-12	3 00E-05	1.71E-12	1 60E-04	3.30E-04	2 23E-06	8.25E+03	3.15E+07	2 34E-02
Y 90	6.32E+04	11.5%	10%	32	6.19E+06	1.12E-05	1.81E-12	3 00E-05	1.26E-12	1 60E-04	3.30E-04	2.28E-09	8.44E+00	3.15E+07	1.77E-05
PM147	2 63E+04	11.5%	10%	32	6 19E+06	1.12E-05	1 81E-12	3 00E-05	5.26E-13	1.60E-04	3.30E-04	1 06E-08	3 92E+01	3.15E+07	3 43E-05
CE144	8.14E+03	11.5%	10%	32	6.19E+06	1.12E-05	1 81E-12	3 00E-05	1 63E-13	1.60E-04	3 30E-04	1.01E-07	3.74E+02	3.15E+07	1 01E-04
PR144	8.14E+03	11 5%	10%	32	6.19E+06	1.12E-05	1.81E-12	3 00E-05	1 63E-13	1 60E-04	3 30E-04	1.17E-11	4.33E-02	3.15E+07	1.17E-08
EU154	5 90E+03	11 5%	10%	32	6.19E+06	1.12E-05	1.81E-12	3 00E-05	1.18E-13	1 60E-04	3 30E-04	7.73E-08	2.86E+02	3.15E+07	5 61E-05
CM244	1 01E+04	11 5%	10%	32	6 19E+06	1.12E-05	1 81E-12	3 00E-05	2.02E-13	1.60E-04	3.30E-04	6 70E-05	2 48E+05	3.15E+07	8.32E-02
PU238	5 81E+03	11.5%	10%	32	6 19E+06	1.12E-05	1 81E-12	3 00E-05	1.16E-13	1.60E-04	3.30E-04	1.06E-04	3.92E+05	3.15E+07	7.58E-02
SB125	2 30E+03	11 5%	10%	32	6.19E+06	1.12E-05	1.81E-12	3 00E-05	4 60E-14	1 60E-04	3.30E-04	3.30E-09	1.22E+01	3.15E+07	9 33E-07
EU155	1 65E+03	11 5%	10%	32	6.19E+06	1.12E-05	1 81E-12	3.00E-05	3.30E-14	1.60E-04	3.30E-04	1.12E-08	4.14E+01	3 15E+07	2.27E-06
AM241	9 00E+02	11.5%	10%	32	6.19E+06	1.12E-05	1 81E-12	3.00E-05	1 80E-14	1.60E-04	3.30E-04	1.20E-04	4 44E+05	3.15E+07	1 33E-02
TE125M	5 61E+02	11.5%	10%	32	6.19E+06	1.12E-05	1 81E-12	3 00E-05	1.12E-14	1 60E-04	3.30E-04	1 97E-09	7.29E+00	3.15E+07	1.36E-07
PU240	4 05E+02	11 5%	10%	32	6.19E+06	1.12E-05	1.81E-12	3.00E-05	8.10E-15	1 60E-04	3.30E-04	1.16E-04	4 29E+05	3.15E+07	5.78E-03
SM151	3.38E+02	11.5%	10%	32	6.19E+06	1.12E-05	1.81E-12	3.00E-05	6.76E-15	1.60E-04	3 30E-04	8.10E-09	3.00E+01	3.15E+07	3 37E-07
PU239	2 04E+02	11.5%	10%	32	6.19E+06	1 12E-05	1 81E-12	3 00E-05	4.08E-15	1 60E-04	3.30E-04	1.16E-04	4.29E+05	3.15E+07	2 91E-03
BA137M	9 27E+04	11.5%	10%	32	6.19E+06	1.12E-05	1.81E-12	3 00E-05	1.85E-12	1 60E-04	3.30E-04	0.00E+00	0.00E+00	3.15E+07	0 00E+00
RH106	1 59E+04	11.5%	10%	32	6.19E+06	1.12E-05	1 81E-12	3 00E-05	3.18E-13	1 60E-04	3.30E-04	0 00E+00	0 00E+00	3.15E+07	0 00E+00
PR144M	1.14E+02	11 5%	10%	32	6.19E+06	1.12E-05	1.81E-12	3 00E-05	2.28E-15	1 60E-04	3 30E-04	0 00E+00	0 00E+00	3 15E+07	0 00E+00
AM243	4.87E+01	11.5%	10%	32	6.19E+06	1.12E-05	1 81E-12	3 00E-05	9.74E-16	1 60E-04	3.30E-04	1.19E-04	4.40E+05	3.15E+07	7.13E-04
CM242	3 23E+01	11 5%	10%	32	6.19E+06	1.12E-05	1 81E-12	3 00E-05	6 46E-16	1.60E-04	3.30E-04	4.67E-06	1.73E+04	3.15E+07	1 86E-05
CM243	3 63E+01	11 5%	10%	32	6.19E+06	1.12E-05	1.81E-12	3 00E-05	7.26E-16	1 60E-04	3.30E-04	8 30E-05	3 07E+05	3.15E+07	3 71E-04
NP239	4.87E+01	11.5%	10%	32	6.19E+06	1.12E-05	1 81E-12	3 00E-05	9 74E-16	1 60E-04	3.30E-04	6 78E-10	2 51E+00	3.15E+07	4 06E-09
NP237	3 88E-01	11.5%	10%	32	6.19E+06	1.12E-05	1 81E-12	3 00E-05	7.76E-18	1 60E-04	3.30E-04	1.46E-04	5 40E+05	3.15E+07	6 97E-06
PU242	2 85E+00	11.5%	10%	32	6.19E+06	1 12E-05	1 81E-12	3 00E-05	5 70E-17	1 60E-04	3.30E-04	1.11E-04	4.11E+05	3.15E+07	3 89E-05
AM242	8 72E+00	11 5%	10%	32	6 19E+06	1.12E-05	1.81E-12	3 00E-05	1.74E-16	1.60E-04	3 30E-04	1.58E-08	5.85E+01	3.15E+07	1 69E-08
AM242M	8 76E+00	11.5%	10%	32	6.19E+06	1.12E-05	1.81E-12	3 00E-05	1.75E-16	1 60E-04	3.30E-04	1.15E-04	4.26E+05	3.15E+07	1.24E-04
														Total	4.85E-01

MPC-32														
Accident Conditions														
Committed Dose Equivalent From Inhalation														
Nuclide	Inventory (Ci/Assy)	% remain airborne	No Assy	MPC Vol (cm3)	L_{acc} Rate at Upstream (cm3/s)	Fraction Released per sec	Release Fraction	Release Rate (Ci/sec)	X/Q (sec/m3)	Breathing Rate (m3/sec)	DCF (Sv/Bq)	DCF (mRem/uCi)	Occupancy Time (sec)	CDE (mRem)
Gases														
H 3	3 68E+02	100%	32	6.19E+06	1 95E-05	3.15E-12	0.30	1.11E-08	8 00E-03	3 30E-04	1.73E-11	6 40E-02	2.59E+06	4.88E-03
I129	3.31E-02	100%	32	6 19E+06	1.95E-05	3.15E-12	0 30	1 00E-12	8 00E-03	3 30E-04	8 69E-11	3 22E-01	2.59E+06	2 20E-06
KR 85	5 86E+03	100%	32	6.19E+06	1.95E-05	3 15E-12	0.30	1.77E-07	8 00E-03	3.30E-04	0 00E+00	0.00E+00	2 59E+06	0.00E+00
Crud														
Co-60	2 18E+01	100%	32	6.19E+06	1.95E-05	3.15E-12	1 00	2 20E-09	8.00E-03	3 30E-04	4.76E-09	1.76E+01	2 59E+06	2.65E-01
Volatiles														
SR 90	6 32E+04	100%	32	6.19E+06	1.95E-05	3.15E-12	2.00E-04	1 28E-09	8 00E-03	3.30E-04	2 64E-09	9.77E+00	2 59E+06	8.52E-02
RU106	1.59E+04	100%	32	6 19E+06	1.95E-05	3.15E-12	2 00E-04	3.21E-10	8 00E-03	3 30E-04	1.38E-08	5 11E+01	2.59E+06	1.12E-01
CS134	4.04E+04	100%	32	6.19E+06	1.95E-05	3.15E-12	2.00E-04	8.15E-10	8 00E-03	3.30E-04	1 30E-08	4.81E+01	2 59E+06	2 68E-01
CS137	9 82E+04	100%	32	6 19E+06	1.95E-05	3.15E-12	2.00E-04	1 98E-09	8 00E-03	3.30E-04	8.76E-09	3.24E+01	2 59E+06	4.39E-01
Fines														
PU241	8 53E+04	10%	32	6.19E+06	1 95E-05	3.15E-12	3 00E-05	2 58E-11	8.00E-03	3 30E-04	6 82E-07	2 52E+03	2.59E+06	4.46E-01
Y 90	6 32E+04	10%	32	6 19E+06	1.95E-05	3.15E-12	3 00E-05	1 91E-11	8.00E-03	3.30E-04	9.52E-12	3 52E-02	2.59E+06	4 61E-06
PM147	2 63E+04	10%	32	6.19E+06	1 95E-05	3 15E-12	3 00E-05	7 96E-12	8.00E-03	3.30E-04	1 88E-14	6 96E-05	2.59E+06	3.79E-09
CE144	8.14E+03	10%	32	6.19E+06	1.95E-05	3.15E-12	3.00E-05	2 46E-12	8 00E-03	3.30E-04	1.93E-09	7.14E+00	2.59E+06	1 20E-04
PR144	8.14E+03	10%	32	6.19E+06	1.95E-05	3 15E-12	3 00E-05	2.46E-12	8 00E-03	3.30E-04	2.41E-15	8 92E-06	2 59E+06	1.50E-10
EU154	5 90E+03	10%	32	6 19E+06	1 95E-05	3.15E-12	3 00E-05	1 79E-12	8 00E-03	3 30E-04	1.17E-08	4.33E+01	2 59E+06	5 29E-04
CM244	1.01E+04	10%	32	6 19E+06	1.95E-05	3.15E-12	3 00E-05	3 06E-12	8.00E-03	3 30E-04	1 59E-05	5 88E+04	2 59E+06	1 23E+00
PU238	5.81E+03	10%	32	6 19E+06	1 95E-05	3.15E-12	3 00E-05	1.76E-12	8 00E-03	3 30E-04	2 80E-05	1.04E+05	2 59E+06	1 25E+00
SB125	2 30E+03	10%	32	6 19E+06	1 95E-05	3.15E-12	3.00E-05	6 96E-13	8 00E-03	3 30E-04	3 60E-10	1 33E+00	2 59E+06	6 34E-06
EU155	1 65E+03	10%	32	6 19E+06	1.95E-05	3.15E-12	3 00E-05	4 99E-13	8 00E-03	3 30E-04	3 56E-10	1 32E+00	2.59E+06	4 50E-06
AM241	9 00E+02	10%	32	6 19E+06	1.95E-05	3 15E-12	3 00E-05	2.72E-13	8 00E-03	3 30E-04	3 25E-05	1 20E+05	2.59E+06	2.24E-01
TE125M	5 61E+02	10%	32	6.19E+06	1.95E-05	3 15E-12	3 00E-05	1.70E-13	8 00E-03	3 30E-04	1.24E-10	4 59E-01	2 59E+06	5 33E-07
PU240	4 05E+02	10%	32	6 19E+06	1.95E-05	3.15E-12	3 00E-05	1 23E-13	8 00E-03	3 30E-04	3.18E-05	1.18E+05	2 59E+06	9 87E-02
SM151	3 38E+02	10%	32	6.19E+06	1.95E-05	3 15E-12	3 00E-05	1.02E-13	8.00E-03	3 30E-04	4.03E-14	1.49E-04	2 59E+06	1 04E-10
PU239	2 04E+02	10%	32	6 19E+06	1 95E-05	3.15E-12	3 00E-05	6 17E-14	8.00E-03	3.30E-04	3.18E-05	1.18E+05	2.59E+06	4.97E-02
BA137M	9 27E+04	10%	32	6 19E+06	1 95E-05	3.15E-12	3.00E-05	2 81E-11	8.00E-03	3 30E-04	0.00E+00	0 00E+00	2.59E+06	0.00E+00
RH106	1 59E+04	10%	32	6 19E+06	1.95E-05	3 15E-12	3 00E-05	4 81E-12	8 00E-03	3 30E-04	0 00E+00	0 00E+00	2.59E+06	0 00E+00
PR144M	1.14E+02	10%	32	6 19E+06	1 95E-05	3 15E-12	3 00E-05	3 45E-14	8 00E-03	3 30E-04	0 00E+00	0 00E+00	2 59E+06	0 00E+00
AM243	4 87E+01	10%	32	6 19E+06	1 95E-05	3.15E-12	3 00E-05	1 47E-14	8 00E-03	3 30E-04	3 26E-05	1 21E+05	2 59E+06	1 22E-02
CM242	3 23E+01	10%	32	6 19E+06	1 95E-05	3 15E-12	3 00E-05	9.78E-15	8 00E-03	3 30E-04	5 70E-07	2 11E+03	2.59E+06	1 41E-04
CM243	3 63E+01	10%	32	6 19E+06	1 95E-05	3.15E-12	3 00E-05	1.10E-14	8 00E-03	3.30E-04	2.07E-05	7 66E+04	2 59E+06	5.76E-03
NP239	4 87E+01	10%	32	6.19E+06	1.95E-05	3 15E-12	3 00E-05	1 47E-14	8.00E-03	3 30E-04	7 45E-11	2 76E-01	2.59E+06	2.78E-08
NP237	3 88E-01	10%	32	6 19E+06	1.95E-05	3.15E-12	3 00E-05	1 17E-16	8 00E-03	3 30E-04	2.96E-05	1.10E+05	2 59E+06	8 80E-05
PU242	2.85E+00	10%	32	6 19E+06	1 95E-05	3.15E-12	3 00E-05	8 63E-16	8.00E-03	3 30E-04	3 02E-05	1.12E+05	2.59E+06	6.60E-04
AM242	8 72E+00	10%	32	6.19E+06	1 95E-05	3.15E-12	3 00E-05	2 64E-15	8.00E-03	3.30E-04	1 94E-09	7.18E+00	2.59E+06	1.30E-07
AM242M	8 76E+00	10%	32	6.19E+06	1.95E-05	3.15E-12	3 00E-05	2 65E-15	8.00E-03	3.30E-04	3.21E-05	1.19E+05	2.59E+06	2.15E-03
													Total	4 49E+00

MPC-32														
Accident Conditions														
Committed Dose Equivalent From Inhalation														
Nuclide	Inventory (Ci/Assy)	% remain airborne	No. Assy	MPC Vol (cm3)	L_{acc} Rate at Upstream (cm3/s)	Fraction Released per sec	Release Fraction	Release Rate (Ci/sec)	X/Q (sec/m3)	Breathing Rate (m3/sec)	DCF (Sv/Bq)	DCF (mRem/uCi)	Occupancy Time (sec)	CDE (mRem)
Gases														
H 3	3 68E+02	100%	32	6.19E+06	1.95E-05	3 15E-12	0 30	1.11E-08	8.00E-03	3.30E-04	1.73E-11	6.40E-02	2.59E+06	4.88E-03
I129	3 31E-02	100%	32	6.19E+06	1 95E-05	3.15E-12	0.30	1.00E-12	8.00E-03	3.30E-04	2 09E-10	7.73E-01	2.59E+06	5.30E-06
KR 85	5 86E+03	100%	32	6 19E+06	1.95E-05	3.15E-12	0.30	1.77E-07	8 00E-03	3.30E-04	0.00E+00	0.00E+00	2.59E+06	0.00E+00
Crud														
Co-60	2.18E+01	100%	32	6.19E+06	1 95E-05	3.15E-12	1 00	2.20E-09	8 00E-03	3 30E-04	1.84E-08	6 81E+01	2.59E+06	1 02E+00
Volatiles														
SR 90	6.32E+04	100%	32	6.19E+06	1.95E-05	3.15E-12	2 00E-04	1 28E-09	8 00E-03	3 30E-04	2.64E-09	9 77E+00	2 59E+06	8 52E-02
RU106	1.59E+04	100%	32	6.19E+06	1.95E-05	3.15E-12	2.00E-04	3.21E-10	8 00E-03	3 30E-04	1.37E-08	5 07E+01	2.59E+06	1.11E-01
CS134	4 04E+04	100%	32	6.19E+06	1.95E-05	3.15E-12	2.00E-04	8.15E-10	8 00E-03	3 30E-04	1 08E-08	4 00E+01	2.59E+06	2 23E-01
CS137	9 82E+04	100%	32	6 19E+06	1.95E-05	3.15E-12	2.00E-04	1.98E-09	8 00E-03	3.30E-04	7 84E-09	2 90E+01	2 59E+06	3.93E-01
Fines														
PU241	8 53E+04	10%	32	6.19E+06	1 95E-05	3.15E-12	3 00E-05	2 58E-11	8 00E-03	3.30E-04	3 06E-11	1.13E-01	2 59E+06	2 00E-05
Y 90	6.32E+04	10%	32	6.19E+06	1.95E-05	3 15E-12	3 00E-05	1.91E-11	8.00E-03	3.30E-04	9.52E-12	3.52E-02	2.59E+06	4.61E-06
PM147	2.63E+04	10%	32	6 19E+06	1.95E-05	3.15E-12	3.00E-05	7.96E-12	8 00E-03	3.30E-04	3 60E-14	1.33E-04	2.59E+06	7.25E-09
CE144	8.14E+03	10%	32	6.19E+06	1.95E-05	3.15E-12	3.00E-05	2.46E-12	8 00E-03	3.30E-04	1.97E-09	7.29E+00	2.59E+06	1 23E-04
PR144	8.14E+03	10%	32	6.19E+06	1.95E-05	3.15E-12	3 00E-05	2.46E-12	8 00E-03	3.30E-04	1 05E-14	3 89E-05	2.59E+06	6 55E-10
EU154	5.90E+03	10%	32	6.19E+06	1.95E-05	3.15E-12	3.00E-05	1.79E-12	8 00E-03	3 30E-04	1.55E-08	5 74E+01	2 59E+06	7 01E-04
CM244	1 01E+04	10%	32	6.19E+06	1.95E-05	3.15E-12	3.00E-05	3 06E-12	8 00E-03	3.30E-04	1.04E-09	3 85E+00	2.59E+06	8 05E-05
PU238	5 81E+03	10%	32	6.19E+06	1.95E-05	3.15E-12	3 00E-05	1.76E-12	8.00E-03	3.30E-04	1 00E-09	3 70E+00	2.59E+06	4.45E-05
SB125	2 30E+03	10%	32	6.19E+06	1.95E-05	3.15E-12	3 00E-05	6.96E-13	8 00E-03	3.30E-04	4.16E-10	1.54E+00	2.59E+06	7.33E-06
EU155	1.65E+03	10%	32	6.19E+06	1.95E-05	3.15E-12	3 00E-05	4.99E-13	8.00E-03	3.30E-04	6.14E-10	2.27E+00	2.59E+06	7.76E-06
AM241	9.00E+02	10%	32	6.19E+06	1 95E-05	3.15E-12	3 00E-05	2.72E-13	8 00E-03	3 30E-04	2 67E-09	9 88E+00	2.59E+06	1 84E-05
TE125M	5 61E+02	10%	32	6.19E+06	1.95E-05	3 15E-12	3 00E-05	1.70E-13	8 00E-03	3 30E-04	1.07E-10	3.96E-01	2.59E+06	4.60E-07
PU240	4 05E+02	10%	32	6.19E+06	1.95E-05	3.15E-12	3 00E-05	1 23E-13	8 00E-03	3.30E-04	9 51E-10	3 52E+00	2 59E+06	2.95E-06
SM151	3.38E+02	10%	32	6.19E+06	1.95E-05	3.15E-12	3 00E-05	1 02E-13	8 00E-03	3.30E-04	1.49E-13	5.51E-04	2.59E+06	3 86E-10
PU239	2 04E+02	10%	32	6 19E+06	1.95E-05	3.15E-12	3 00E-05	6.17E-14	8.00E-03	3.30E-04	9 22E-10	3.41E+00	2.59E+06	1.44E-06
BA137M	9 27E+04	10%	32	6.19E+06	1.95E-05	3.15E-12	3 00E-05	2.81E-11	8 00E-03	3.30E-04	0 00E+00	0 00E+00	2.59E+06	0 00E+00
RH106	1 59E+04	10%	32	6.19E+06	1.95E-05	3.15E-12	3 00E-05	4.81E-12	8 00E-03	3 30E-04	0.00E+00	0.00E+00	2.59E+06	0.00E+00
PR144M	1.14E+02	10%	32	6.19E+06	1.95E-05	3.15E-12	3.00E-05	3 45E-14	8 00E-03	3.30E-04	0 00E+00	0 00E+00	2.59E+06	0 00E+00
AM243	4.87E+01	10%	32	6.19E+06	1.95E-05	3.15E-12	3 00E-05	1.47E-14	8.00E-03	3.30E-04	1.52E-08	5.62E+01	2.59E+06	5.67E-06
CM242	3 23E+01	10%	32	6.19E+06	1.95E-05	3.15E-12	3 00E-05	9.78E-15	8 00E-03	3.30E-04	9 44E-10	3 49E+00	2.59E+06	2.34E-07
CM243	3 63E+01	10%	32	6.19E+06	1.95E-05	3 15E-12	3.00E-05	1.10E-14	8 00E-03	3 30E-04	6 29E-09	2.33E+01	2 59E+06	1.75E-06
NP239	4.87E+01	10%	32	6.19E+06	1.95E-05	3.15E-12	3.00E-05	1.47E-14	8 00E-03	3.30E-04	1.63E-11	6.03E-02	2.59E+06	6.08E-09
NP237	3 88E-01	10%	32	6 19E+06	1.95E-05	3.15E-12	3 00E-05	1.17E-16	8 00E-03	3.30E-04	1 69E-08	6 25E+01	2.59E+06	5.02E-08
PU242	2 85E+00	10%	32	6.19E+06	1.95E-05	3.15E-12	3 00E-05	8.63E-16	8.00E-03	3.30E-04	9.45E-10	3.50E+00	2.59E+06	2 06E-08
AM242	8.72E+00	10%	32	6.19E+06	1.95E-05	3 15E-12	3 00E-05	2.64E-15	8 00E-03	3.30E-04	2.94E-12	1.09E-02	2.59E+06	1 96E-10
AM242M	8.76E+00	10%	32	6.19E+06	1.95E-05	3.15E-12	3 00E-05	2.65E-15	8 00E-03	3.30E-04	1.38E-09	5.11E+00	2.59E+06	9 26E-08
													Total	1 84E+00

MPC-32														
Accident Conditions														
Committed Dose Equivalent From Inhalation														
Nuclide	Inventory (Ci/Assy)	% remain airborne	No. Assy	MPC Vol (cm3)	L_{acc} Rate at Upstream (cm3/s)	Fraction Released per sec	Release Fraction	Release Rate (Ci/sec)	X/Q (sec/m3)	Breathing Rate (m3/sec)	DCF (Sv/Bq)	DCF (mRem/uCi)	Occupancy Time (sec)	CDE (mRem)
Gases														
H 3	3 68E+02	100%	32	6.19E+06	1.95E-05	3 15E-12	0.30	1.11E-08	8 00E-03	3.30E-04	1.73E-11	6 40E-02	2.59E+06	4 88E-03
I129	3 31E-02	100%	32	6 19E+06	1 95E-05	3.15E-12	0 30	1 00E-12	8 00E-03	3 30E-04	3.14E-10	1.16E+00	2 59E+06	7 96E-06
KR 85	5.86E+03	100%	32	6.19E+06	1.95E-05	3 15E-12	0 30	1.77E-07	8.00E-03	3 30E-04	0 00E+00	0 00E+00	2.59E+06	0 00E+00
Crud														
Co-60	2.18E+01	100%	32	6 19E+06	1 95E-05	3 15E-12	1 00	2.20E-09	8 00E-03	3 30E-04	3 45E-07	1 28E+03	2.59E+06	1.92E+01
Volatiles														
SR 90	6 32E+04	100%	32	6 19E+06	1.95E-05	3.15E-12	2.00E-04	1.28E-09	8 00E-03	3.30E-04	2.86E-06	1.06E+04	2.59E+06	9.23E+01
RU106	1 59E+04	100%	32	6 19E+06	1.95E-05	3 15E-12	2 00E-04	3 21E-10	8.00E-03	3 30E-04	1 04E-06	3 85E+03	2 59E+06	8 45E+00
CS134	4 04E+04	100%	32	6.19E+06	1.95E-05	3.15E-12	2.00E-04	8 15E-10	8 00E-03	3 30E-04	1.18E-08	4 37E+01	2 59E+06	2.44E-01
CS137	9.82E+04	100%	32	6.19E+06	1.95E-05	3.15E-12	2.00E-04	1.98E-09	8.00E-03	3.30E-04	8.82E-09	3 26E+01	2.59E+06	4 42E-01
Fines														
PU241	8 53E+04	10%	32	6.19E+06	1.95E-05	3 15E-12	3 00E-05	2.58E-11	8.00E-03	3 30E-04	3.18E-06	1.18E+04	2.59E+06	2.08E+00
Y 90	6 32E+04	10%	32	6.19E+06	1 95E-05	3.15E-12	3 00E-05	1 91E-11	8.00E-03	3 30E-04	9.31E-09	3 44E+01	2 59E+06	4 51E-03
PM147	2.63E+04	10%	32	6.19E+06	1.95E-05	3.15E-12	3 00E-05	7.96E-12	8.00E-03	3 30E-04	7 74E-08	2 86E+02	2.59E+06	1.56E-02
CE144	8 14E+03	10%	32	6 19E+06	1.95E-05	3.15E-12	3 00E-05	2.46E-12	8 00E-03	3.30E-04	7.91E-07	2.93E+03	2 59E+06	4 93E-02
PR144	8 14E+03	10%	32	6 19E+06	1 95E-05	3.15E-12	3.00E-05	2 46E-12	8 00E-03	3 30E-04	9.40E-11	3.48E-01	2.59E+06	5.86E-06
EU154	5.90E+03	10%	32	6 19E+06	1 95E-05	3 15E-12	3.00E-05	1.79E-12	8.00E-03	3 30E-04	7.92E-08	2 93E+02	2 59E+06	3 58E-03
CM244	1.01E+04	10%	32	6.19E+06	1 95E-05	3.15E-12	3 00E-05	3 06E-12	8.00E-03	3 30E-04	1.93E-05	7.14E+04	2.59E+06	1 49E+00
PU238	5.81E+03	10%	32	6.19E+06	1.95E-05	3 15E-12	3 00E-05	1 76E-12	8 00E-03	3 30E-04	3 20E-04	1.18E+06	2 59E+06	1 42E+01
SB125	2 30E+03	10%	32	6 19E+06	1 95E-05	3.15E-12	3 00E-05	6 96E-13	8 00E-03	3 30E-04	2.17E-08	8 03E+01	2.59E+06	3 82E-04
EU155	1.65E+03	10%	32	6.19E+06	1.95E-05	3.15E-12	3.00E-05	4.99E-13	8.00E-03	3.30E-04	1.19E-08	4 40E+01	2 59E+06	1.50E-04
AM241	9 00E+02	10%	32	6 19E+06	1 95E-05	3.15E-12	3 00E-05	2 72E-13	8 00E-03	3 30E-04	1.84E-05	6 81E+04	2.59E+06	1 27E-01
TE125M	5 61E+02	10%	32	6.19E+06	1.95E-05	3.15E-12	3 00E-05	1.70E-13	8 00E-03	3 30E-04	1.04E-08	3 85E+01	2 59E+06	4.47E-05
PU240	4.05E+02	10%	32	6.19E+06	1.95E-05	3.15E-12	3.00E-05	1.23E-13	8 00E-03	3 30E-04	3 23E-04	1 20E+06	2.59E+06	1 00E+00
SM151	3 38E+02	10%	32	6.19E+06	1.95E-05	3.15E-12	3.00E-05	1.02E-13	8 00E-03	3 30E-04	3 26E-09	1.21E+01	2.59E+06	8.44E-06
PU239	2.04E+02	10%	32	6.19E+06	1.95E-05	3.15E-12	3.00E-05	6 17E-14	8 00E-03	3 30E-04	3 23E-04	1.20E+06	2.59E+06	5.05E-01
BA137M	9.27E+04	10%	32	6 19E+06	1.95E-05	3.15E-12	3 00E-05	2 81E-11	8.00E-03	3 30E-04	0 00E+00	0 00E+00	2 59E+06	0 00E+00
RH106	1.59E+04	10%	32	6.19E+06	1.95E-05	3.15E-12	3 00E-05	4 81E-12	8 00E-03	3 30E-04	0.00E+00	0 00E+00	2.59E+06	0.00E+00
PR144M	1.14E+02	10%	32	6 19E+06	1.95E-05	3 15E-12	3 00E-05	3 45E-14	8.00E-03	3 30E-04	0.00E+00	0 00E+00	2.59E+06	0 00E+00
AM243	4 87E+01	10%	32	6 19E+06	1 95E-05	3 15E-12	3.00E-05	1.47E-14	8 00E-03	3.30E-04	1.78E-05	6 59E+04	2 59E+06	6 64E-03
CM242	3 23E+01	10%	32	6 19E+06	1 95E-05	3.15E-12	3 00E-05	9.78E-15	8 00E-03	3 30E-04	1.55E-05	5.74E+04	2 59E+06	3 84E-03
CM243	3.63E+01	10%	32	6.19E+06	1.95E-05	3.15E-12	3 00E-05	1 10E-14	8 00E-03	3.30E-04	1 94E-05	7.18E+04	2.59E+06	5.40E-03
NP239	4 87E+01	10%	32	6 19E+06	1.95E-05	3 15E-12	3 00E-05	1 47E-14	8 00E-03	3 30E-04	2.36E-09	8.73E+00	2 59E+06	8 81E-07
NP237	3 88E-01	10%	32	6 19E+06	1.95E-05	3.15E-12	3 00E-05	1.17E-16	8 00E-03	3.30E-04	1 61E-05	5.96E+04	2.59E+06	4 79E-05
PU242	2 85E+00	10%	32	6.19E+06	1.95E-05	3.15E-12	3.00E-05	8.63E-16	8.00E-03	3 30E-04	3.07E-04	1.14E+06	2 59E+06	6.70E-03
AM242	8.72E+00	10%	32	6 19E+06	1.95E-05	3.15E-12	3 00E-05	2.64E-15	8.00E-03	3 30E-04	5 20E-08	1.92E+02	2 59E+06	3.47E-06
AM242M	8 76E+00	10%	32	6 19E+06	1 95E-05	3.15E-12	3.00E-05	2 65E-15	8 00E-03	3 30E-04	4.20E-06	1.55E+04	2 59E+06	2 82E-04
													Total	1 40E+02

MPC-32														
Accident Conditions														
Committed Dose Equivalent From Inhalation														
Nuclide	Inventory (Ci/Assy)	% remain airborne	No. Assy	MPC Vol (cm3)	L_{acc} Rate at Upstream (cm3/s)	Fraction Released per sec	Release Fraction	Release Rate (Ci/sec)	X/Q (sec/m3)	Breathing Rate (m3/sec)	DCF (Sv/Bq)	DCF (mRem/uCi)	Occupancy Time (sec)	CDE (mRem)
Gases														
H 3	3 68E+02	100%	32	6 19E+06	1.95E-05	3.15E-12	0.30	1.11E-08	8 00E-03	3.30E-04	1.73E-11	6 40E-02	2.59E+06	4 88E-03
I129	3 31E-02	100%	32	6.19E+06	1 95E-05	3.15E-12	0.30	1.00E-12	8 00E-03	3 30E-04	1.40E-10	5.18E-01	2.59E+06	3.55E-06
KR 85	5 86E+03	100%	32	6.19E+06	1.95E-05	3 15E-12	0.30	1.77E-07	8 00E-03	3 30E-04	0 00E+00	0 00E+00	2.59E+06	0 00E+00
Crud														
Co-60	2.18E+01	100%	32	6.19E+06	1 95E-05	3.15E-12	1 00	2.20E-09	8 00E-03	3.30E-04	1.72E-08	6.36E+01	2.59E+06	9 56E-01
Volatiles														
SR 90	6 32E+04	100%	32	6.19E+06	1.95E-05	3 15E-12	2.00E-04	1.28E-09	8 00E-03	3.30E-04	3 36E-07	1 24E+03	2.59E+06	1 08E+01
RU106	1.59E+04	100%	32	6.19E+06	1.95E-05	3 15E-12	2.00E-04	3 21E-10	8 00E-03	3 30E-04	1 37E-08	5.07E+01	2.59E+06	1.11E-01
CS134	4.04E+04	100%	32	6.19E+06	1.95E-05	3.15E-12	2 00E-04	8 15E-10	8 00E-03	3.30E-04	1.18E-08	4.37E+01	2.59E+06	2 44E-01
CS137	9.82E+04	100%	32	6.19E+06	1.95E-05	3.15E-12	2 00E-04	1 98E-09	8 00E-03	3 30E-04	8.30E-09	3 07E+01	2.59E+06	4.16E-01
Fines														
PU241	8 53E+04	10%	32	6 19E+06	1.95E-05	3 15E-12	3 00E-05	2.58E-11	8 00E-03	3.30E-04	3 36E-06	1.24E+04	2.59E+06	2.20E+00
Y 90	6 32E+04	10%	32	6.19E+06	1.95E-05	3.15E-12	3 00E-05	1.91E-11	8 00E-03	3 30E-04	2 79E-10	1.03E+00	2.59E+06	1.35E-04
PM147	2 63E+04	10%	32	6.19E+06	1.95E-05	3 15E-12	3 00E-05	7.96E-12	8 00E-03	3.30E-04	8.16E-09	3 02E+01	2.59E+06	1 64E-03
CE144	8.14E+03	10%	32	6.19E+06	1 95E-05	3.15E-12	3 00E-05	2.46E-12	8 00E-03	3.30E-04	2.67E-08	9 88E+01	2.59E+06	1.67E-03
PR144	8.14E+03	10%	32	6.19E+06	1.95E-05	3.15E-12	3 00E-05	2.46E-12	8.00E-03	3.30E-04	8.08E-14	2.99E-04	2.59E+06	5 04E-09
EU154	5 90E+03	10%	32	6.19E+06	1 95E-05	3.15E-12	3.00E-05	1.79E-12	8 00E-03	3 30E-04	1 06E-07	3 92E+02	2 59E+06	4.79E-03
CM244	1.01E+04	10%	32	6.19E+06	1.95E-05	3.15E-12	3 00E-05	3 06E-12	8.00E-03	3.30E-04	9.38E-05	3.47E+05	2.59E+06	7.26E+00
PU238	5 81E+03	10%	32	6.19E+06	1.95E-05	3.15E-12	3.00E-05	1.76E-12	8.00E-03	3.30E-04	1.52E-04	5 62E+05	2.59E+06	6 77E+00
SB125	2.30E+03	10%	32	6.19E+06	1 95E-05	3.15E-12	3 00E-05	6 96E-13	8 00E-03	3.30E-04	6.49E-10	2.40E+00	2.59E+06	1.14E-05
EU155	1 65E+03	10%	32	6.19E+06	1 95E-05	3 15E-12	3.00E-05	4.99E-13	8 00E-03	3.30E-04	1.43E-08	5.29E+01	2.59E+06	1.81E-04
AM241	9 00E+02	10%	32	6.19E+06	1 95E-05	3 15E-12	3 00E-05	2.72E-13	8 00E-03	3.30E-04	1.74E-04	6.44E+05	2.59E+06	1 20E+00
TE125M	5 61E+02	10%	32	6.19E+06	1.95E-05	3 15E-12	3 00E-05	1.70E-13	8 00E-03	3 30E-04	3 01E-09	1.11E+01	2.59E+06	1 29E-05
PU240	4 05E+02	10%	32	6.19E+06	1 95E-05	3.15E-12	3 00E-05	1.23E-13	8.00E-03	3.30E-04	1.69E-04	6.25E+05	2 59E+06	5.24E-01
SM151	3 38E+02	10%	32	6 19E+06	1.95E-05	3 15E-12	3 00E-05	1.02E-13	8 00E-03	3 30E-04	1.10E-08	4 07E+01	2 59E+06	2.85E-05
PU239	2 04E+02	10%	32	6.19E+06	1 95E-05	3.15E-12	3.00E-05	6.17E-14	8 00E-03	3.30E-04	1 69E-04	6.25E+05	2 59E+06	2.64E-01
BA137M	9 27E+04	10%	32	6.19E+06	1 95E-05	3.15E-12	3 00E-05	2 81E-11	8 00E-03	3.30E-04	0 00E+00	0.00E+00	2 59E+06	0 00E+00
RH106	1.59E+04	10%	32	6.19E+06	1.95E-05	3.15E-12	3 00E-05	4 81E-12	8 00E-03	3 30E-04	0 00E+00	0 00E+00	2.59E+06	0 00E+00
PR144M	1 14E+02	10%	32	6.19E+06	1 95E-05	3.15E-12	3 00E-05	3 45E-14	8 00E-03	3.30E-04	0 00E+00	0 00E+00	2.59E+06	0 00E+00
AM243	4.87E+01	10%	32	6.19E+06	1.95E-05	3.15E-12	3.00E-05	1.47E-14	8 00E-03	3 30E-04	1.73E-04	6.40E+05	2.59E+06	6 46E-02
CM242	3.23E+01	10%	32	6.19E+06	1.95E-05	3.15E-12	3.00E-05	9 78E-15	8 00E-03	3.30E-04	3 90E-06	1.44E+04	2.59E+06	9 65E-04
CM243	3 63E+01	10%	32	6.19E+06	1.95E-05	3.15E-12	3.00E-05	1.10E-14	8 00E-03	3 30E-04	1.18E-04	4 37E+05	2.59E+06	3.28E-02
NP239	4 87E+01	10%	32	6.19E+06	1 95E-05	3.15E-12	3.00E-05	1.47E-14	8 00E-03	3 30E-04	2.08E-10	7.70E-01	2.59E+06	7.76E-08
NP237	3 88E-01	10%	32	6.19E+06	1.95E-05	3.15E-12	3 00E-05	1.17E-16	8.00E-03	3.30E-04	2 62E-04	9 69E+05	2.59E+06	7.79E-04
PU242	2 85E+00	10%	32	6.19E+06	1.95E-05	3 15E-12	3.00E-05	8 63E-16	8 00E-03	3.30E-04	1 61E-04	5 96E+05	2.59E+06	3.52E-03
AM242	8 72E+00	10%	32	6.19E+06	1.95E-05	3.15E-12	3.00E-05	2.64E-15	8.00E-03	3.30E-04	1.32E-08	4 88E+01	2.59E+06	8 82E-07
AM242M	8 76E+00	10%	32	6.19E+06	1 95E-05	3.15E-12	3.00E-05	2 65E-15	8 00E-03	3.30E-04	1.69E-04	6 25E+05	2 59E+06	1.13E-02
													Total	3 09E+01

MPC-32														
Accident Conditions														
Committed Dose Equivalent From Inhalation														
Nuclide	Inventory (Ci/Assy)	% remain airborne	No. Assy	MPC Vol (cm3)	L_{acc} Rate at Upstream (cm3/s)	Fraction Released per sec	Release Fraction	Release Rate (Ci/sec)	X/Q (sec/m3)	Breathing Rate (m3/sec)	DCF (Sv/Bq)	DCF (mRem/uCi)	Occupancy Time (sec)	CDE (mRem)
Gases														
H 3	3.68E+02	100%	32	6 19E+06	1.95E-05	3.16E-12	0 30	1.12E-08	8 00E-03	3 30E-04	1 73E-11	6 40E-02	2.59E+06	4 89E-03
I129	3 31E-02	100%	32	6 19E+06	1 95E-05	3.16E-12	0.30	1.00E-12	8.00E-03	3.30E-04	1 38E-10	5.11E-01	2.59E+06	3.51E-06
KR 85	5 86E+03	100%	32	6.19E+06	1 95E-05	3.16E-12	0 30	1 78E-07	8 00E-03	3.30E-04	0.00E+00	0.00E+00	2.59E+06	0 00E+00
Crud														
Co-60	2.18E+01	100%	32	6.19E+06	1 95E-05	3.16E-12	1 00	2.20E-09	8 00E-03	3 30E-04	1 35E-08	5.00E+01	2 59E+06	7 52E-01
Volatiles														
SR 90	6 32E+04	100%	32	6.19E+06	1 95E-05	3.16E-12	2 00E-04	1.28E-09	8 00E-03	3 30E-04	7.27E-07	2.69E+03	2 59E+06	2 35E+01
RU106	1 59E+04	100%	32	6.19E+06	1 95E-05	3.16E-12	2.00E-04	3 21E-10	8.00E-03	3 30E-04	1.37E-08	5 07E+01	2 59E+06	1.11E-01
CS134	4 04E+04	100%	32	6.19E+06	1.95E-05	3.16E-12	2 00E-04	8.16E-10	8 00E-03	3.30E-04	1.10E-08	4.07E+01	2.59E+06	2 27E-01
CS137	9 82E+04	100%	32	6.19E+06	1.95E-05	3.16E-12	2.00E-04	1.98E-09	8.00E-03	3 30E-04	7 94E-09	2.94E+01	2.59E+06	3 99E-01
Fines														
PU241	8 53E+04	10%	32	6 19E+06	1.95E-05	3.16E-12	3 00E-05	2.59E-11	8 00E-03	3 30E-04	4 20E-05	1 55E+05	2.59E+06	2 75E+01
Y 90	6 32E+04	10%	32	6 19E+06	1.95E-05	3.16E-12	3.00E-05	1 92E-11	8 00E-03	3.30E-04	2.78E-10	1 03E+00	2.59E+06	1 35E-04
PM147	2 63E+04	10%	32	6.19E+06	1.95E-05	3.16E-12	3.00E-05	7.97E-12	8 00E-03	3 30E-04	1 02E-07	3.77E+02	2.59E+06	2 06E-02
CE144	8 14E+03	10%	32	6.19E+06	1 95E-05	3.16E-12	3 00E-05	2.47E-12	8.00E-03	3 30E-04	4.54E-08	1.68E+02	2.59E+06	2 84E-03
PR144	8 14E+03	10%	32	6 19E+06	1.95E-05	3.16E-12	3.00E-05	2.47E-12	8 00E-03	3.30E-04	1.35E-13	5 00E-04	2 59E+06	8 43E-09
EU154	5 90E+03	10%	32	6 19E+06	1.95E-05	3.16E-12	3.00E-05	1.79E-12	8 00E-03	3.30E-04	5 23E-07	1 94E+03	2.59E+06	2 37E-02
CM244	1 01E+04	10%	32	6 19E+06	1.95E-05	3.16E-12	3 00E-05	3.06E-12	8 00E-03	3.30E-04	1.17E-03	4 33E+06	2 59E+06	9 07E+01
PU238	5 81E+03	10%	32	6.19E+06	1 95E-05	3 16E-12	3 00E-05	1.76E-12	8 00E-03	3.30E-04	1.90E-03	7 03E+06	2 59E+06	8 47E+01
SB125	2.30E+03	10%	32	6.19E+06	1.95E-05	3.16E-12	3 00E-05	6 97E-13	8 00E-03	3.30E-04	2.73E-09	1.01E+01	2.59E+06	4 82E-05
EU155	1 65E+03	10%	32	6 19E+06	1 95E-05	3 16E-12	3.00E-05	5 00E-13	8.00E-03	3 30E-04	1.52E-07	5.62E+02	2.59E+06	1 92E-03
AM241	9 00E+02	10%	32	6 19E+06	1.95E-05	3.16E-12	3.00E-05	2 73E-13	8.00E-03	3 30E-04	2.17E-03	8 03E+06	2 59E+06	1 50E+01
TE125M	5 61E+02	10%	32	6.19E+06	1 95E-05	3.16E-12	3 00E-05	1.70E-13	8 00E-03	3 30E-04	3 21E-08	1 19E+02	2 59E+06	1 38E-04
PU240	4 05E+02	10%	32	6 19E+06	1.95E-05	3 16E-12	3.00E-05	1.23E-13	8 00E-03	3.30E-04	2.11E-03	7.81E+06	2.59E+06	6 56E+00
SM151	3 38E+02	10%	32	6 19E+06	1.95E-05	3 16E-12	3.00E-05	1 02E-13	8.00E-03	3 30E-04	1.38E-07	5.11E+02	2.59E+06	3 58E-04
PU239	2.04E+02	10%	32	6.19E+06	1 95E-05	3.16E-12	3 00E-05	6.18E-14	8.00E-03	3 30E-04	2.11E-03	7 81E+06	2 59E+06	3 30E+00
BA137M	9.27E+04	10%	32	6.19E+06	1 95E-05	3.16E-12	3.00E-05	2.81E-11	8.00E-03	3 30E-04	0.00E+00	0 00E+00	2 59E+06	0 00E+00
RH106	1 59E+04	10%	32	6.19E+06	1 95E-05	3.16E-12	3 00E-05	4.82E-12	8.00E-03	3 30E-04	0 00E+00	0 00E+00	2.59E+06	0 00E+00
PR144M	1.14E+02	10%	32	6.19E+06	1.95E-05	3.16E-12	3 00E-05	3 46E-14	8 00E-03	3 30E-04	0.00E+00	0 00E+00	2.59E+06	0 00E+00
AM243	4 87E+01	10%	32	6.19E+06	1 95E-05	3.16E-12	3.00E-05	1.48E-14	8 00E-03	3 30E-04	2 17E-03	8.03E+06	2 59E+06	8.11E-01
CM242	3 23E+01	10%	32	6 19E+06	1.95E-05	3.16E-12	3 00E-05	9.79E-15	8 00E-03	3 30E-04	4.87E-05	1.80E+05	2.59E+06	1 21E-02
CM243	3.63E+01	10%	32	6 19E+06	1 95E-05	3 16E-12	3.00E-05	1 10E-14	8 00E-03	3 30E-04	1 47E-03	5 44E+06	2.59E+06	4.10E-01
NP239	4 87E+01	10%	32	6 19E+06	1 95E-05	3 16E-12	3 00E-05	1.48E-14	8 00E-03	3.30E-04	2 03E-09	7.51E+00	2.59E+06	7.59E-07
NP237	3 88E-01	10%	32	6.19E+06	1 95E-05	3.16E-12	3 00E-05	1.18E-16	8 00E-03	3 30E-04	3 27E-03	1 21E+07	2 59E+06	9 74E-03
PU242	2.85E+00	10%	32	6.19E+06	1 95E-05	3 16E-12	3.00E-05	8 64E-16	8 00E-03	3.30E-04	2 01E-03	7 44E+06	2.59E+06	4 40E-02
AM242	8 72E+00	10%	32	6.19E+06	1.95E-05	3.16E-12	3 00E-05	2.64E-15	8 00E-03	3.30E-04	1 65E-07	6.11E+02	2 59E+06	1 10E-05
AM242M	8.76E+00	10%	32	6 19E+06	1.95E-05	3.16E-12	3 00E-05	2.66E-15	8 00E-03	3 30E-04	2.12E-03	7 84E+06	2 59E+06	1 43E-01
													Total	2 54E+02

MPC-32														
Accident Conditions														
Committed Dose Equivalent From Inhalation														
Nuclide	Inventory (Ci/Assy)	% remain airborne	No. Assy	MPC Vol (cm3)	L_{acc} Rate at Upstream (cm3/s)	Fraction Released per sec	Release Fraction	Release Rate (Ci/sec)	X/Q (sec/m3)	Breathing Rate (m3/sec)	DCF (Sv/Bq)	DCF (mRem/uCi)	Occupancy Time (sec)	CDE (mRem)
Gases														
H 3	3 68E+02	100%	32	6.19E+06	1.95E-05	3.15E-12	0 30	1.11E-08	8 00E-03	3.30E-04	1.73E-11	6 40E-02	2 59E+06	4.88E-03
I129	3 31E-02	100%	32	6.19E+06	1.95E-05	3.15E-12	0 30	1.00E-12	8 00E-03	3.30E-04	1.56E-06	5.77E+03	2.59E+06	3.96E-02
KR 85	5 86E+03	100%	32	6.19E+06	1.95E-05	3.15E-12	0.30	1.77E-07	8 00E-03	3.30E-04	0.00E+00	0.00E+00	2.59E+06	0.00E+00
Crud														
Co-60	2.18E+01	100%	32	6 19E+06	1.95E-05	3.15E-12	1 00	2.20E-09	8 00E-03	3 30E-04	1.62E-08	5 99E+01	2.59E+06	9 01E-01
Volatiles														
SR 90	6.32E+04	100%	32	6 19E+06	1.95E-05	3.15E-12	2.00E-04	1.28E-09	8 00E-03	3.30E-04	2.64E-09	9.77E+00	2 59E+06	8 52E-02
RU106	1 59E+04	100%	32	6.19E+06	1.95E-05	3 15E-12	2.00E-04	3.21E-10	8 00E-03	3 30E-04	1.37E-08	5 07E+01	2 59E+06	1.11E-01
CS134	4 04E+04	100%	32	6.19E+06	1.95E-05	3.15E-12	2.00E-04	8.15E-10	8 00E-03	3.30E-04	1.11E-08	4.11E+01	2.59E+06	2.29E-01
CS137	9 82E+04	100%	32	6.19E+06	1.95E-05	3.15E-12	2.00E-04	1.98E-09	8 00E-03	3 30E-04	7.93E-09	2.93E+01	2.59E+06	3 98E-01
Fines														
PU241	8 53E+04	10%	32	6.19E+06	1 95E-05	3.15E-12	3 00E-05	2 58E-11	8 00E-03	3 30E-04	1.24E-11	4 59E-02	2.59E+06	8 10E-06
Y 90	6.32E+04	10%	32	6.19E+06	1 95E-05	3 15E-12	3 00E-05	1.91E-11	8 00E-03	3.30E-04	9 52E-12	3.52E-02	2.59E+06	4.61E-06
PM147	2 63E+04	10%	32	6.19E+06	1.95E-05	3.15E-12	3 00E-05	7.96E-12	8.00E-03	3.30E-04	1.98E-14	7.33E-05	2.59E+06	3 99E-09
CE144	8.14E+03	10%	32	6.19E+06	1 95E-05	3.15E-12	3 00E-05	2 46E-12	8.00E-03	3 30E-04	1.88E-09	6.96E+00	2.59E+06	1.17E-04
PR144	8.14E+03	10%	32	6 19E+06	1.95E-05	3.15E-12	3 00E-05	2.46E-12	8.00E-03	3.30E-04	8.47E-15	3.13E-05	2.59E+06	5 28E-10
EU154	5.90E+03	10%	32	6 19E+06	1.95E-05	3 15E-12	3 00E-05	1.79E-12	8 00E-03	3.30E-04	7.14E-09	2.64E+01	2.59E+06	3 23E-04
CM244	1 01E+04	10%	32	6.19E+06	1.95E-05	3.15E-12	3 00E-05	3 06E-12	8.00E-03	3 30E-04	1.01E-09	3.74E+00	2 59E+06	7.82E-05
PU238	5 81E+03	10%	32	6 19E+06	1.95E-05	3.15E-12	3.00E-05	1.76E-12	8.00E-03	3 30E-04	9 62E-10	3.56E+00	2.59E+06	4 28E-05
SB125	2.30E+03	10%	32	6.19E+06	1 95E-05	3.15E-12	3 00E-05	6.96E-13	8.00E-03	3 30E-04	3 24E-10	1.20E+00	2.59E+06	5 71E-06
EU155	1.65E+03	10%	32	6.19E+06	1.95E-05	3 15E-12	3.00E-05	4.99E-13	8 00E-03	3.30E-04	2.40E-10	8.88E-01	2 59E+06	3 03E-06
AM241	9.00E+02	10%	32	6.19E+06	1.95E-05	3.15E-12	3 00E-05	2.72E-13	8 00E-03	3 30E-04	1 60E-09	5 92E+00	2.59E+06	1.10E-05
TE125M	5 61E+02	10%	32	6.19E+06	1.95E-05	3 15E-12	3 00E-05	1.70E-13	8 00E-03	3 30E-04	9 93E-11	3 67E-01	2.59E+06	4.27E-07
PU240	4 05E+02	10%	32	6.19E+06	1.95E-05	3.15E-12	3 00E-05	1.23E-13	8 00E-03	3.30E-04	9.05E-10	3 35E+00	2 59E+06	2 81E-06
SM151	3 38E+02	10%	32	6.19E+06	1 95E-05	3 15E-12	3.00E-05	1 02E-13	8 00E-03	3 30E-04	1.32E-14	4.88E-05	2.59E+06	3.42E-11
PU239	2 04E+02	10%	32	6.19E+06	1.95E-05	3 15E-12	3 00E-05	6.17E-14	8 00E-03	3.30E-04	9 03E-10	3.34E+00	2 59E+06	1.41E-06
BA137M	9 27E+04	10%	32	6.19E+06	1.95E-05	3 15E-12	3 00E-05	2.81E-11	8 00E-03	3 30E-04	0.00E+00	0 00E+00	2.59E+06	0 00E+00
RH106	1.59E+04	10%	32	6.19E+06	1.95E-05	3.15E-12	3 00E-05	4 81E-12	8 00E-03	3 30E-04	0.00E+00	0.00E+00	2.59E+06	0 00E+00
PR144M	1.14E+02	10%	32	6.19E+06	1.95E-05	3.15E-12	3 00E-05	3.45E-14	8 00E-03	3 30E-04	0 00E+00	0 00E+00	2 59E+06	0 00E+00
AM243	4 87E+01	10%	32	6.19E+06	1 95E-05	3.15E-12	3.00E-05	1 47E-14	8.00E-03	3.30E-04	8 29E-09	3 07E+01	2 59E+06	3 09E-06
CM242	3 23E+01	10%	32	6.19E+06	1.95E-05	3.15E-12	3 00E-05	9 78E-15	8.00E-03	3.30E-04	9 41E-10	3 48E+00	2.59E+06	2.33E-07
CM243	3 63E+01	10%	32	6.19E+06	1 95E-05	3.15E-12	3 00E-05	1.10E-14	8 00E-03	3 30E-04	3 83E-09	1.42E+01	2.59E+06	1 07E-06
NP239	4.87E+01	10%	32	6.19E+06	1.95E-05	3 15E-12	3.00E-05	1.47E-14	8 00E-03	3.30E-04	7.62E-12	2 82E-02	2 59E+06	2 84E-09
NP237	3 88E-01	10%	32	6 19E+06	1 95E-05	3.15E-12	3 00E-05	1.17E-16	8 00E-03	3 30E-04	1.34E-08	4.96E+01	2.59E+06	3 98E-08
PU242	2 85E+00	10%	32	6.19E+06	1 95E-05	3.15E-12	3 00E-05	8 63E-16	8 00E-03	3 30E-04	8.79E-10	3 25E+00	2 59E+06	1.92E-08
AM242	8 72E+00	10%	32	6.19E+06	1.95E-05	3.15E-12	3 00E-05	2 64E-15	8.00E-03	3 30E-04	2 52E-12	9.32E-03	2.59E+06	1.68E-10
AM242M	8 76E+00	10%	32	6 19E+06	1 95E-05	3.15E-12	3 00E-05	2 65E-15	8 00E-03	3.30E-04	5 64E-10	2.09E+00	2.59E+06	3.79E-08
													Total	1.77E+00

MPC-32														
Accident Conditions														
Committed Effective Dose Equivalent From Inhalation														
Nuclide	Inventory (Ci/Assy)	% remain airborne	No. Assy	MPC Vol (cm3)	L_{acc} Rate at Upstream (cm3/s)	Fraction Released per sec	Release Fraction	Release Rate (Ci/sec)	X/Q (sec/m3)	Breathing Rate (m3/sec)	DCF (Sv/Bq)	DCF (mRem/uCi)	Occupancy Time (sec)	CEDE (mRem)
Gases														
H 3	3 68E+02	100%	32	6.20E+06	1.95E-05	3.15E-12	0 30	1.11E-08	8 00E-03	3.30E-04	1.73E-11	6 40E-02	2.59E+06	4 87E-03
I129	3 31E-02	100%	32	6 20E+06	1.95E-05	3.15E-12	0 30	1 00E-12	8 00E-03	3.30E-04	4.69E-08	1.74E+02	2.59E+06	1.19E-03
KR 85	5 86E+03	100%	32	6 20E+06	1.95E-05	3 15E-12	0.30	1.77E-07	8 00E-03	3 30E-04	0 00E+00	0 00E+00	2 59E+06	0 00E+00
Crud														
Co-60	2.18E+01	100%	32	6 20E+06	1 95E-05	3.15E-12	1 00	2.19E-09	8 00E-03	3.30E-04	5 91E-08	2.19E+02	2 59E+06	3 28E+00
Volatiles														
SR 90	6 32E+04	100%	32	6.20E+06	1.95E-05	3.15E-12	2.00E-04	1 27E-09	8 00E-03	3 30E-04	3.51E-07	1 30E+03	2 59E+06	1.13E+01
RU106	1 59E+04	100%	32	6.20E+06	1.95E-05	3.15E-12	2.00E-04	3 20E-10	8.00E-03	3.30E-04	1 29E-07	4.77E+02	2 59E+06	1.05E+00
CS134	4 04E+04	100%	32	6 20E+06	1 95E-05	3.15E-12	2.00E-04	8 14E-10	8.00E-03	3.30E-04	1.25E-08	4.63E+01	2 59E+06	2.58E-01
CS137	9 82E+04	100%	32	6 20E+06	1.95E-05	3.15E-12	2.00E-04	1.98E-09	8.00E-03	3 30E-04	8.63E-09	3.19E+01	2 59E+06	4 32E-01
Fines														
PU241	8 53E+04	10%	32	6 20E+06	1.95E-05	3.15E-12	3 00E-05	2 58E-11	8 00E-03	3 30E-04	2.23E-06	8.25E+03	2.59E+06	1.46E+00
Y 90	6.32E+04	10%	32	6 20E+06	1 95E-05	3.15E-12	3 00E-05	1.91E-11	8 00E-03	3.30E-04	2 28E-09	8 44E+00	2.59E+06	1 10E-03
PM147	2 63E+04	10%	32	6 20E+06	1.95E-05	3.15E-12	3 00E-05	7.95E-12	8 00E-03	3.30E-04	1 06E-08	3.92E+01	2 59E+06	2.13E-03
CE144	8 14E+03	10%	32	6 20E+06	1.95E-05	3.15E-12	3 00E-05	2.46E-12	8 00E-03	3.30E-04	1 01E-07	3.74E+02	2 59E+06	6 29E-03
PR144	8 14E+03	10%	32	6 20E+06	1 95E-05	3.15E-12	3.00E-05	2.46E-12	8 00E-03	3 30E-04	1.17E-11	4.33E-02	2 59E+06	7.29E-07
EU154	5.90E+03	10%	32	6 20E+06	1 95E-05	3.15E-12	3 00E-05	1 78E-12	8.00E-03	3 30E-04	7.73E-08	2 86E+02	2.59E+06	3 49E-03
CM244	1 01E+04	10%	32	6 20E+06	1.95E-05	3 15E-12	3.00E-05	3.05E-12	8 00E-03	3 30E-04	6.70E-05	2 48E+05	2.59E+06	5.18E+00
PU238	5 81E+03	10%	32	6.20E+06	1 95E-05	3.15E-12	3.00E-05	1 76E-12	8.00E-03	3 30E-04	1.06E-04	3 92E+05	2.59E+06	4 71E+00
SB125	2 30E+03	10%	32	6 20E+06	1.95E-05	3.15E-12	3 00E-05	6 95E-13	8 00E-03	3 30E-04	3 30E-09	1 22E+01	2 59E+06	5 80E-05
EU155	1.65E+03	10%	32	6.20E+06	1 95E-05	3.15E-12	3 00E-05	4.99E-13	8 00E-03	3.30E-04	1.12E-08	4.14E+01	2.59E+06	1.41E-04
AM241	9 00E+02	10%	32	6.20E+06	1.95E-05	3 15E-12	3 00E-05	2.72E-13	8 00E-03	3.30E-04	1 20E-04	4.44E+05	2 59E+06	8 26E-01
TE125M	5 61E+02	10%	32	6 20E+06	1 95E-05	3 15E-12	3 00E-05	1 69E-13	8 00E-03	3.30E-04	1 97E-09	7.29E+00	2 59E+06	8 45E-06
PU240	4.05E+02	10%	32	6 20E+06	1.95E-05	3.15E-12	3.00E-05	1.22E-13	8 00E-03	3.30E-04	1.16E-04	4.29E+05	2 59E+06	3.59E-01
SM151	3 38E+02	10%	32	6 20E+06	1.95E-05	3.15E-12	3.00E-05	1 02E-13	8 00E-03	3 30E-04	8.10E-09	3 00E+01	2.59E+06	2.09E-05
PU239	2 04E+02	10%	32	6 20E+06	1.95E-05	3.15E-12	3 00E-05	6 16E-14	8.00E-03	3.30E-04	1.16E-04	4.29E+05	2.59E+06	1 81E-01
BA137M	9 27E+04	10%	32	6 20E+06	1.95E-05	3.15E-12	3 00E-05	2.80E-11	8 00E-03	3 30E-04	0.00E+00	0 00E+00	2.59E+06	0.00E+00
RH106	1.59E+04	10%	32	6 20E+06	1.95E-05	3.15E-12	3 00E-05	4.80E-12	8.00E-03	3.30E-04	0 00E+00	0 00E+00	2 59E+06	0 00E+00
PR144M	1.14E+02	10%	32	6 20E+06	1 95E-05	3.15E-12	3 00E-05	3.44E-14	8 00E-03	3 30E-04	0 00E+00	0 00E+00	2 59E+06	0 00E+00
AM243	4 87E+01	10%	32	6 20E+06	1.95E-05	3.15E-12	3 00E-05	1.47E-14	8.00E-03	3 30E-04	1.19E-04	4.40E+05	2 59E+06	4 43E-02
CM242	3 23E+01	10%	32	6 20E+06	1 95E-05	3.15E-12	3 00E-05	9 76E-15	8 00E-03	3.30E-04	4 67E-06	1.73E+04	2 59E+06	1.15E-03
CM243	3 63E+01	10%	32	6 20E+06	1.95E-05	3.15E-12	3 00E-05	1 10E-14	8 00E-03	3 30E-04	8 30E-05	3 07E+05	2 59E+06	2.30E-02
NP239	4 87E+01	10%	32	6 20E+06	1 95E-05	3.15E-12	3 00E-05	1.47E-14	8.00E-03	3 30E-04	6.78E-10	2.51E+00	2 59E+06	2.53E-07
NP237	3 88E-01	10%	32	6 20E+06	1.95E-05	3.15E-12	3 00E-05	1.17E-16	8 00E-03	3 30E-04	1.46E-04	5 40E+05	2.59E+06	4.33E-04
PU242	2 85E+00	10%	32	6 20E+06	1 95E-05	3.15E-12	3.00E-05	8 61E-16	8 00E-03	3.30E-04	1.11E-04	4 11E+05	2.59E+06	2 42E-03
AM242	8.72E+00	10%	32	6 20E+06	1.95E-05	3.15E-12	3 00E-05	2 63E-15	8.00E-03	3 30E-04	1.58E-08	5.85E+01	2 59E+06	1 05E-06
AM242M	8 76E+00	10%	32	6.20E+06	1 95E-05	3.15E-12	3.00E-05	2 65E-15	8 00E-03	3 30E-04	1.15E-04	4 26E+05	2.59E+06	7.71E-03
													Total	2.91E+01

MPC-32														
Normal Conditions														
Effective Dose Equivalent From Submersion														
Nuclide	Inventory (Ci/Assy)	% available for release	% remain airborne	No. Assy	MPC Vol (cm3)	L_{nor} Rate at Upstream (cm3/s)	Fraction Released per sec	Release Fraction	Release Rate (Ci/sec)	X/Q (sec/m3)	DCF (Sv/Bq)	DCF (mRem/uCi)	Occ Time (sec)	DDE (mRem)
Gases														
H 3	3 68E+02	2 5%	100%	32	6.19E+06	1.12E-05	1 81E-12	0.30	1.60E-10	1.60E-04	0 00E+00	0 00E+00	3.15E+07	0 00E+00
I129	3 31E-02	2 5%	100%	32	6 19E+06	1.12E-05	1.81E-12	0.30	1.44E-14	1.60E-04	4.83E-16	1.79E-06	3.15E+07	1.30E-10
KR 85	5.86E+03	2.5%	100%	32	6.19E+06	1.12E-05	1.81E-12	0.30	2 55E-09	1 60E-04	1.17E-16	4.33E-07	3.15E+07	5 56E-06
Crud														
Co-60	2.18E+01	100 0%	100%	32	6.19E+06	1.12E-05	1 81E-12	0 15	1 89E-10	1 60E-04	1 23E-13	4 55E-04	3 15E+07	4.34E-04
Volatiles														
SR 90	6.32E+04	2.5%	100%	32	6.19E+06	1.12E-05	1.81E-12	2 00E-04	1.83E-11	1 60E-04	7.78E-18	2.88E-08	3.15E+07	2 66E-09
RU106	1.59E+04	2 5%	100%	32	6.19E+06	1.12E-05	1.81E-12	2.00E-04	4.61E-12	1 60E-04	0 00E+00	0 00E+00	3 15E+07	0 00E+00
CS134	4.04E+04	2 5%	100%	32	6.19E+06	1.12E-05	1 81E-12	2 00E-04	1.17E-11	1 60E-04	7.40E-14	2.74E-04	3.15E+07	1.62E-05
CS137	9 82E+04	2.5%	100%	32	6.19E+06	1.12E-05	1 81E-12	2.00E-04	2.84E-11	1 60E-04	7 96E-18	2.95E-08	3.15E+07	4.22E-09
Fines														
PU241	8 53E+04	2.5%	10%	32	6.19E+06	1.12E-05	1 81E-12	3 00E-05	3.71E-13	1 60E-04	7.19E-20	2 66E-10	3.15E+07	4 97E-13
Y 90	6.32E+04	2 5%	10%	32	6.19E+06	1.12E-05	1.81E-12	3.00E-05	2.75E-13	1 60E-04	1 89E-16	6.99E-07	3.15E+07	9.68E-10
PM147	2 63E+04	2 5%	10%	32	6.19E+06	1.12E-05	1 81E-12	3 00E-05	1.14E-13	1 60E-04	7.48E-19	2.77E-09	3.15E+07	1.59E-12
CE144	8.14E+03	2.5%	10%	32	6.19E+06	1.12E-05	1.81E-12	3 00E-05	3 54E-14	1.60E-04	8 53E-16	3.16E-06	3.15E+07	5 63E-10
PR144	8.14E+03	2.5%	10%	32	6.19E+06	1.12E-05	1.81E-12	3.00E-05	3 54E-14	1 60E-04	1 90E-15	7.03E-06	3.15E+07	1.25E-09
EU154	5 90E+03	2 5%	10%	32	6.19E+06	1.12E-05	1 81E-12	3 00E-05	2.56E-14	1 60E-04	6 00E-14	2 22E-04	3 15E+07	2 87E-08
CM244	1 01E+04	2 5%	10%	32	6.19E+06	1.12E-05	1 81E-12	3 00E-05	4 39E-14	1.60E-04	6.90E-18	2.55E-08	3.15E+07	5 65E-12
PU238	5 81E+03	2.5%	10%	32	6.19E+06	1.12E-05	1.81E-12	3.00E-05	2.52E-14	1 60E-04	6 56E-18	2.43E-08	3.15E+07	3.09E-12
SB125	2.30E+03	2 5%	10%	32	6.19E+06	1.12E-05	1.81E-12	3 00E-05	9 99E-15	1.60E-04	1.98E-14	7 33E-05	3 15E+07	3 69E-09
EU155	1 65E+03	2 5%	10%	32	6.19E+06	1.12E-05	1.81E-12	3 00E-05	7.17E-15	1.60E-04	2.49E-15	9 21E-06	3.15E+07	3.33E-10
AM241	9 00E+02	2.5%	10%	32	6.19E+06	1.12E-05	1 81E-12	3.00E-05	3.91E-15	1.60E-04	8 58E-16	3 17E-06	3.15E+07	6 26E-11
TE125M	5 61E+02	2.5%	10%	32	6.19E+06	1.12E-05	1 81E-12	3 00E-05	2.44E-15	1.60E-04	5.96E-16	2 21E-06	3.15E+07	2.71E-11
PU240	4 05E+02	2.5%	10%	32	6.19E+06	1.12E-05	1 81E-12	3 00E-05	1.76E-15	1 60E-04	6.36E-18	2.35E-08	3.15E+07	2 09E-13
SM151	3.38E+02	2 5%	10%	32	6.19E+06	1.12E-05	1.81E-12	3 00E-05	1.47E-15	1 60E-04	5 20E-20	1.92E-10	3.15E+07	1.42E-15
PU239	2 04E+02	2.5%	10%	32	6.19E+06	1.12E-05	1.81E-12	3.00E-05	8 87E-16	1 60E-04	4.84E-18	1.79E-08	3.15E+07	8.00E-14
BA137M	9 27E+04	2 5%	10%	32	6.19E+06	1.12E-05	1 81E-12	3 00E-05	4.03E-13	1.60E-04	2 82E-14	1.04E-04	3.15E+07	2.12E-07
RH106	1.59E+04	2.5%	10%	32	6.19E+06	1.12E-05	1.81E-12	3 00E-05	6 91E-14	1.60E-04	1.01E-14	3.74E-05	3 15E+07	1.30E-08
PR144M	1.14E+02	2 5%	10%	32	6.19E+06	1.12E-05	1.81E-12	3 00E-05	4.95E-16	1.60E-04	3.25E-16	1 20E-06	3.15E+07	3 00E-12
AM243	4 87E+01	2 5%	10%	32	6.19E+06	1.12E-05	1.81E-12	3 00E-05	2.12E-16	1 60E-04	2.19E-15	8.10E-06	3.15E+07	8 64E-12
CM242	3.23E+01	2 5%	10%	32	6.19E+06	1.12E-05	1 81E-12	3.00E-05	1.40E-16	1 60E-04	7.83E-18	2.90E-08	3.15E+07	2 05E-14
CM243	3.63E+01	2 5%	10%	32	6.19E+06	1.12E-05	1.81E-12	3 00E-05	1.58E-16	1 60E-04	5.77E-15	2.13E-05	3.15E+07	1.70E-11
NP239	4.87E+01	2 5%	10%	32	6 19E+06	1.12E-05	1.81E-12	3 00E-05	2.12E-16	1.60E-04	7 53E-15	2.79E-05	3.15E+07	2.97E-11
NP237	3 88E-01	2 5%	10%	32	6.19E+06	1.12E-05	1.81E-12	3 00E-05	1 69E-18	1.60E-04	1.04E-15	3 85E-06	3 15E+07	3.27E-14
PU242	2 85E+00	2 5%	10%	32	6.19E+06	1.12E-05	1 81E-12	3 00E-05	1.24E-17	1 60E-04	5.34E-18	1.98E-08	3 15E+07	1.23E-15
AM242	8.72E+00	2.5%	10%	32	6.19E+06	1.12E-05	1 81E-12	3 00E-05	3.79E-17	1 60E-04	6 09E-16	2.25E-06	3.15E+07	4 30E-13
AM242M	8 76E+00	2.5%	10%	32	6.19E+06	1.12E-05	1.81E-12	3 00E-05	3.81E-17	1.60E-04	3 80E-17	1.41E-07	3.15E+07	2.70E-14
													Total	4.56E-04

MPC-32														
Normal Conditions														
Effective Dose Equivalent From Submersion														
Nuclide	Inventory (Ci/Assy)	% available for release	% remain airborne	No Assy	MPC Vol (cm3)	L_{nor} Rate at Upstream (cm3/s)	Fraction Released per sec	Release Fraction	Release Rate (Ci/sec)	X/Q (sec/m3)	DCF (Sv/Bq)	DCF (mRem/uCi)	Occ Time (sec)	DDE (mRem)
Gases														
H 3	3.68E+02	2 5%	100%	32	6.19E+06	1.12E-05	1.81E-12	0 30	1 60E-10	1.60E-04	0 00E+00	0.00E+00	3.15E+07	0 00E+00
I129	3 31E-02	2.5%	100%	32	6.19E+06	1.12E-05	1 81E-12	0 30	1.44E-14	1 60E-04	6.66E-16	2.46E-06	3.15E+07	1.79E-10
KR 85	5 86E+03	2.5%	100%	32	6 19E+06	1.12E-05	1 81E-12	0.30	2 55E-09	1.60E-04	1 34E-16	4 96E-07	3.15E+07	6.36E-06
Crud														
Co-60	2.18E+01	100 0%	100%	32	6.19E+06	1 12E-05	1.81E-12	0 15	1.89E-10	1 60E-04	1.39E-13	5 14E-04	3 15E+07	4.90E-04
Volatiles														
SR 90	6 32E+04	2 5%	100%	32	6.19E+06	1.12E-05	1 81E-12	2.00E-04	1.83E-11	1 60E-04	9.49E-18	3.51E-08	3.15E+07	3 24E-09
RU106	1 59E+04	2.5%	100%	32	6 19E+06	1.12E-05	1 81E-12	2.00E-04	4 61E-12	1.60E-04	0 00E+00	0 00E+00	3.15E+07	0 00E+00
CS134	4.04E+04	2 5%	100%	32	6.19E+06	1.12E-05	1.81E-12	2 00E-04	1.17E-11	1.60E-04	8.43E-14	3.12E-04	3 15E+07	1.84E-05
CS137	9 82E+04	2 5%	100%	32	6.19E+06	1.12E-05	1.81E-12	2 00E-04	2.84E-11	1 60E-04	9 67E-18	3 58E-08	3 15E+07	5.13E-09
Fines														
PU241	8 53E+04	2 5%	10%	32	6 19E+06	1.12E-05	1.81E-12	3 00E-05	3.71E-13	1 60E-04	8 67E-20	3.21E-10	3.15E+07	5.99E-13
Y 90	6 32E+04	2.5%	10%	32	6.19E+06	1.12E-05	1 81E-12	3.00E-05	2.75E-13	1 60E-04	2.20E-16	8 14E-07	3.15E+07	1 13E-09
PM147	2 63E+04	2 5%	10%	32	6.19E+06	1 12E-05	1.81E-12	3 00E-05	1.14E-13	1 60E-04	9.56E-19	3 54E-09	3 15E+07	2 04E-12
CE144	8 14E+03	2.5%	10%	32	6.19E+06	1.12E-05	1 81E-12	3 00E-05	3 54E-14	1.60E-04	1 01E-15	3.74E-06	3 15E+07	6 66E-10
PR144	8.14E+03	2 5%	10%	32	6.19E+06	1 12E-05	1.81E-12	3 00E-05	3.54E-14	1 60E-04	2.15E-15	7.96E-06	3.15E+07	1.42E-09
EU154	5 90E+03	2 5%	10%	32	6 19E+06	1 12E-05	1 81E-12	3 00E-05	2 56E-14	1 60E-04	6 81E-14	2 52E-04	3.15E+07	3 26E-08
CM244	1.01E+04	2 5%	10%	32	6 19E+06	1.12E-05	1.81E-12	3.00E-05	4.39E-14	1.60E-04	1 33E-17	4.92E-08	3 15E+07	1.09E-11
PU238	5 81E+03	2.5%	10%	32	6.19E+06	1 12E-05	1 81E-12	3 00E-05	2 52E-14	1.60E-04	1 27E-17	4.70E-08	3 15E+07	5 98E-12
SB125	2 30E+03	2 5%	10%	32	6 19E+06	1 12E-05	1 81E-12	3 00E-05	9 99E-15	1 60E-04	2.27E-14	8.40E-05	3.15E+07	4.23E-09
EU155	1 65E+03	2 5%	10%	32	6.19E+06	1.12E-05	1 81E-12	3 00E-05	7.17E-15	1.60E-04	2 95E-15	1.09E-05	3 15E+07	3.94E-10
AM241	9 00E+02	2 5%	10%	32	6.19E+06	1.12E-05	1.81E-12	3.00E-05	3.91E-15	1.60E-04	1.07E-15	3 96E-06	3.15E+07	7 80E-11
TE125M	5.61E+02	2 5%	10%	32	6 19E+06	1.12E-05	1.81E-12	3.00E-05	2 44E-15	1.60E-04	8 48E-16	3.14E-06	3.15E+07	3.85E-11
PU240	4 05E+02	2 5%	10%	32	6.19E+06	1.12E-05	1 81E-12	3 00E-05	1.76E-15	1 60E-04	1.23E-17	4 55E-08	3.15E+07	4 04E-13
SM151	3.38E+02	2.5%	10%	32	6.19E+06	1.12E-05	1.81E-12	3 00E-05	1.47E-15	1 60E-04	8.80E-20	3 26E-10	3.15E+07	2 41E-15
PU239	2 04E+02	2 5%	10%	32	6 19E+06	1.12E-05	1.81E-12	3 00E-05	8 87E-16	1 60E-04	7 55E-18	2 79E-08	3 15E+07	1 25E-13
BA137M	9 27E+04	2.5%	10%	32	6 19E+06	1.12E-05	1.81E-12	3 00E-05	4.03E-13	1 60E-04	3.22E-14	1.19E-04	3.15E+07	2 42E-07
RH106	1 59E+04	2 5%	10%	32	6.19E+06	1.12E-05	1 81E-12	3 00E-05	6.91E-14	1.60E-04	1.16E-14	4.29E-05	3.15E+07	1.49E-08
PR144M	1.14E+02	2 5%	10%	32	6 19E+06	1 12E-05	1 81E-12	3 00E-05	4.95E-16	1 60E-04	4 20E-16	1.55E-06	3.15E+07	3 88E-12
AM243	4 87E+01	2.5%	10%	32	6.19E+06	1 12E-05	1.81E-12	3.00E-05	2 12E-16	1 60E-04	2 61E-15	9 66E-06	3.15E+07	1 03E-11
CM242	3.23E+01	2 5%	10%	32	6.19E+06	1.12E-05	1.81E-12	3.00E-05	1 40E-16	1.60E-04	1.48E-17	5.48E-08	3 15E+07	3.87E-14
CM243	3 63E+01	2 5%	10%	32	6 19E+06	1.12E-05	1 81E-12	3 00E-05	1.58E-16	1 60E-04	6.68E-15	2 47E-05	3.15E+07	1.97E-11
NP239	4 87E+01	2 5%	10%	32	6.19E+06	1.12E-05	1 81E-12	3.00E-05	2.12E-16	1 60E-04	8.73E-15	3.23E-05	3 15E+07	3 45E-11
NP237	3 88E-01	2 5%	10%	32	6.19E+06	1.12E-05	1 81E-12	3 00E-05	1.69E-18	1.60E-04	1.26E-15	4 66E-06	3 15E+07	3.96E-14
PU242	2 85E+00	2 5%	10%	32	6.19E+06	1.12E-05	1 81E-12	3 00E-05	1.24E-17	1 60E-04	1 03E-17	3 81E-08	3 15E+07	2.38E-15
AM242	8.72E+00	2 5%	10%	32	6.19E+06	1.12E-05	1.81E-12	3 00E-05	3 79E-17	1.60E-04	7 30E-16	2 70E-06	3.15E+07	5.16E-13
AM242M	8 76E+00	2.5%	10%	32	6.19E+06	1.12E-05	1 81E-12	3 00E-05	3 81E-17	1 60E-04	6 01E-17	2.22E-07	3 15E+07	4.27E-14
													Total	5 16E-04

MPC-32															
Normal Conditions															
Effective Dose Equivalent From Submersion															
Nuclide	Inventory (Ci/Assy)	% available for release	% remain airborne	No Assy	MPC Vol (cm3)	L_{nor} Rate at Upstream (cm3/s)	Fraction Released per sec	Release Fraction	Release Rate (Ci/sec)	X/Q (sec/m3)	DCF (Sv/Bq)	DCF (mRem/uCi)	Occ Time (sec)	DDE (mRem)	
Gases															
H 3	3 68E+02	2 5%	100%	32	6.19E+06	1.12E-05	1.81E-12	0 30	1 60E-10	1 60E-04	2.75E-18	1 02E-08	3.15E+07	8 20E-09	
I129	3 31E-02	2.5%	100%	32	6.19E+06	1.12E-05	1 81E-12	0.30	1 44E-14	1 60E-04	2.14E-16	7.92E-07	3.15E+07	5.74E-11	
KR 85	5 86E+03	2 5%	100%	32	6.19E+06	1.12E-05	1 81E-12	0.30	2.55E-09	1 60E-04	1.14E-16	4.22E-07	3.15E+07	5.41E-06	
Crud															
Co-60	2 18E+01	100 0%	100%	32	6.19E+06	1.12E-05	1 81E-12	0.15	1.89E-10	1.60E-04	1 24E-13	4 59E-04	3.15E+07	4.38E-04	
Volatiles															
SR 90	6 32E+04	2 5%	100%	32	6.19E+06	1.12E-05	1.81E-12	2 00E-04	1.83E-11	1.60E-04	6.44E-18	2.38E-08	3 15E+07	2.20E-09	
RU106	1 59E+04	2.5%	100%	32	6.19E+06	1.12E-05	1 81E-12	2 00E-04	4.61E-12	1.60E-04	0 00E+00	0 00E+00	3.15E+07	0.00E+00	
CS134	4 04E+04	2 5%	100%	32	6.19E+06	1.12E-05	1 81E-12	2 00E-04	1.17E-11	1.60E-04	7.37E-14	2.73E-04	3.15E+07	1 61E-05	
CS137	9 82E+04	2.5%	100%	32	6.19E+06	1.12E-05	1.81E-12	2.00E-04	2 84E-11	1 60E-04	6 68E-18	2.47E-08	3.15E+07	3.54E-09	
Fines															
PU241	8 53E+04	2 5%	10%	32	6.19E+06	1.12E-05	1 81E-12	3.00E-05	3 71E-13	1.60E-04	6.48E-20	2 40E-10	3 15E+07	4 48E-13	
Y 90	6.32E+04	2.5%	10%	32	6.19E+06	1.12E-05	1.81E-12	3 00E-05	2.75E-13	1.60E-04	1.77E-16	6 55E-07	3.15E+07	9 07E-10	
PM147	2 63E+04	2.5%	10%	32	6.19E+06	1.12E-05	1 81E-12	3 00E-05	1.14E-13	1 60E-04	5.45E-19	2.02E-09	3.15E+07	1.16E-12	
CE144	8.14E+03	2.5%	10%	32	6.19E+06	1.12E-05	1.81E-12	3 00E-05	3.54E-14	1.60E-04	7 69E-16	2 85E-06	3.15E+07	5 07E-10	
PR144	8.14E+03	2 5%	10%	32	6 19E+06	1.12E-05	1 81E-12	3.00E-05	3.54E-14	1 60E-04	1.90E-15	7.03E-06	3.15E+07	1.25E-09	
EU154	5 90E+03	2.5%	10%	32	6.19E+06	1.12E-05	1.81E-12	3 00E-05	2.56E-14	1 60E-04	5 99E-14	2 22E-04	3.15E+07	2.86E-08	
CM244	1 01E+04	2 5%	10%	32	6.19E+06	1.12E-05	1.81E-12	3 00E-05	4 39E-14	1.60E-04	7.08E-19	2.62E-09	3.15E+07	5.79E-13	
PU238	5 81E+03	2.5%	10%	32	6.19E+06	1.12E-05	1.81E-12	3.00E-05	2.52E-14	1.60E-04	1 06E-18	3 92E-09	3.15E+07	4.99E-13	
SB125	2 30E+03	2.5%	10%	32	6.19E+06	1.12E-05	1.81E-12	3 00E-05	9.99E-15	1 60E-04	1.95E-14	7.22E-05	3.15E+07	3 63E-09	
EU155	1.65E+03	2 5%	10%	32	6.19E+06	1.12E-05	1.81E-12	3.00E-05	7.17E-15	1 60E-04	2.22E-15	8 21E-06	3 15E+07	2.97E-10	
AM241	9 00E+02	2.5%	10%	32	6.19E+06	1.12E-05	1 81E-12	3 00E-05	3.91E-15	1.60E-04	6.74E-16	2.49E-06	3 15E+07	4.92E-11	
TE125M	5 61E+02	2.5%	10%	32	6.19E+06	1.12E-05	1 81E-12	3.00E-05	2.44E-15	1.60E-04	2 23E-16	8 25E-07	3.15E+07	1.01E-11	
PU240	4 05E+02	2.5%	10%	32	6.19E+06	1.12E-05	1 81E-12	3 00E-05	1.76E-15	1 60E-04	1.09E-18	4.03E-09	3.15E+07	3.58E-14	
SM151	3.38E+02	2.5%	10%	32	6.19E+06	1.12E-05	1.81E-12	3 00E-05	1.47E-15	1.60E-04	7.08E-21	2 62E-11	3.15E+07	1.94E-16	
PU239	2 04E+02	2.5%	10%	32	6.19E+06	1.12E-05	1 81E-12	3 00E-05	8 87E-16	1.60E-04	2.65E-18	9 81E-09	3.15E+07	4 38E-14	
BA137M	9.27E+04	2.5%	10%	32	6.19E+06	1.12E-05	1.81E-12	3 00E-05	4.03E-13	1 60E-04	2 80E-14	1.04E-04	3.15E+07	2.10E-07	
RH106	1.59E+04	2 5%	10%	32	6.19E+06	1.12E-05	1 81E-12	3.00E-05	6.91E-14	1 60E-04	1 01E-14	3 74E-05	3.15E+07	1.30E-08	
PR144M	1.14E+02	2 5%	10%	32	6.19E+06	1.12E-05	1.81E-12	3 00E-05	4 95E-16	1.60E-04	2 00E-16	7.40E-07	3.15E+07	1 85E-12	
AM243	4 87E+01	2.5%	10%	32	6.19E+06	1.12E-05	1 81E-12	3.00E-05	2.12E-16	1.60E-04	1.92E-15	7.10E-06	3.15E+07	7.58E-12	
CM242	3.23E+01	2 5%	10%	32	6.19E+06	1.12E-05	1.81E-12	3 00E-05	1.40E-16	1.60E-04	1.13E-18	4.18E-09	3.15E+07	2.96E-15	
CM243	3 63E+01	2.5%	10%	32	6 19E+06	1.12E-05	1 81E-12	3.00E-05	1.58E-16	1.60E-04	5.50E-15	2.04E-05	3.15E+07	1.62E-11	
NP239	4 87E+01	2.5%	10%	32	6.19E+06	1.12E-05	1 81E-12	3.00E-05	2.12E-16	1 60E-04	7.18E-15	2.66E-05	3.15E+07	2.83E-11	
NP237	3 88E-01	2.5%	10%	32	6.19E+06	1.12E-05	1 81E-12	3 00E-05	1 69E-18	1.60E-04	9.02E-16	3 34E-06	3.15E+07	2.84E-14	
PU242	2 85E+00	2.5%	10%	32	6.19E+06	1.12E-05	1 81E-12	3.00E-05	1 24E-17	1.60E-04	9 69E-19	3 59E-09	3.15E+07	2.24E-16	
AM242	8.72E+00	2.5%	10%	32	6.19E+06	1.12E-05	1.81E-12	3.00E-05	3.79E-17	1 60E-04	5.51E-16	2.04E-06	3.15E+07	3.89E-13	
AM242M	8 76E+00	2.5%	10%	32	6 19E+06	1.12E-05	1.81E-12	3 00E-05	3 81E-17	1 60E-04	1.72E-17	6.36E-08	3.15E+07	1.22E-14	
													Total	4 59E-04	

MPC-32														
Normal Conditions														
Effective Dose Equivalent From Submersion														
Nuclide	Inventory (Ci/Assy)	% available for release	% remain airborne	No. Assy	MPC Vol (cm3)	L_{nor} Rate at Upstream (cm3/s)	Fraction Released per sec	Release Fraction	Release Rate (Ci/sec)	X/Q (sec/m3)	DCF (Sv/Bq)	DCF (mRem/uCi)	Occ Time (sec)	DDE (mRem)
Gases														
H 3	3 68E+02	2 5%	100%	32	6.19E+06	1.12E-05	1 81E-12	0.30	1 60E-10	1.60E-04	0 00E+00	0 00E+00	3.15E+07	0.00E+00
I129	3 31E-02	2 5%	100%	32	6 19E+06	1.12E-05	1.81E-12	0 30	1 44E-14	1.60E-04	1.64E-16	6 07E-07	3.15E+07	4.40E-11
KR 85	5 86E+03	2 5%	100%	32	6.19E+06	1.12E-05	1 81E-12	0.30	2 55E-09	1 60E-04	1.09E-16	4 03E-07	3 15E+07	5.18E-06
Crud														
Co-60	2.18E+01	100 0%	100%	32	6.19E+06	1.12E-05	1 81E-12	0.15	1 89E-10	1.60E-04	1 23E-13	4 55E-04	3.15E+07	4 34E-04
Volatiles														
SR 90	6 32E+04	2 5%	100%	32	6.19E+06	1.12E-05	1.81E-12	2.00E-04	1.83E-11	1 60E-04	5.44E-18	2 01E-08	3.15E+07	1.86E-09
RU106	1 59E+04	2 5%	100%	32	6.19E+06	1.12E-05	1 81E-12	2 00E-04	4.61E-12	1 60E-04	0 00E+00	0 00E+00	3.15E+07	0.00E+00
CS134	4 04E+04	2 5%	100%	32	6 19E+06	1.12E-05	1 81E-12	2.00E-04	1.17E-11	1.60E-04	7.19E-14	2 66E-04	3 15E+07	1.57E-05
CS137	9 82E+04	2 5%	100%	32	6 19E+06	1.12E-05	1.81E-12	2.00E-04	2 84E-11	1.60E-04	5.70E-18	2.11E-08	3 15E+07	3 02E-09
Fines														
PU241	8 53E+04	2 5%	10%	32	6 19E+06	1.12E-05	1 81E-12	3.00E-05	3 71E-13	1 60E-04	5.63E-20	2 08E-10	3.15E+07	3.89E-13
Y 90	6 32E+04	2.5%	10%	32	6.19E+06	1.12E-05	1.81E-12	3.00E-05	2.75E-13	1.60E-04	1.62E-16	5 99E-07	3.15E+07	8 30E-10
PM147	2 63E+04	2.5%	10%	32	6 19E+06	1.12E-05	1.81E-12	3 00E-05	1.14E-13	1 60E-04	4.46E-19	1 65E-09	3 15E+07	9 51E-13
CE144	8.14E+03	2.5%	10%	32	6 19E+06	1.12E-05	1 81E-12	3 00E-05	3 54E-14	1 60E-04	6.68E-16	2 47E-06	3 15E+07	4.41E-10
PR144	8 14E+03	2 5%	10%	32	6.19E+06	1 12E-05	1 81E-12	3.00E-05	3.54E-14	1.60E-04	1.87E-15	6 92E-06	3.15E+07	1 23E-09
EU154	5 90E+03	2 5%	10%	32	6.19E+06	1.12E-05	1 81E-12	3 00E-05	2 56E-14	1 60E-04	5.87E-14	2.17E-04	3.15E+07	2 81E-08
CM244	1 01E+04	2 5%	10%	32	6 19E+06	1.12E-05	1 81E-12	3 00E-05	4 39E-14	1.60E-04	1.46E-18	5 40E-09	3.15E+07	1 19E-12
PU238	5 81E+03	2 5%	10%	32	6 19E+06	1 12E-05	1 81E-12	3 00E-05	2 52E-14	1.60E-04	1.68E-18	6 22E-09	3.15E+07	7.91E-13
SB125	2 30E+03	2.5%	10%	32	6 19E+06	1.12E-05	1 81E-12	3.00E-05	9.99E-15	1.60E-04	1 87E-14	6 92E-05	3.15E+07	3.48E-09
EU155	1 65E+03	2 5%	10%	32	6.19E+06	1.12E-05	1.81E-12	3 00E-05	7.17E-15	1.60E-04	1.85E-15	6.85E-06	3.15E+07	2.47E-10
AM241	9 00E+02	2 5%	10%	32	6.19E+06	1.12E-05	1 81E-12	3 00E-05	3 91E-15	1 60E-04	5 21E-16	1.93E-06	3.15E+07	3 80E-11
TE125M	5 61E+02	2.5%	10%	32	6.19E+06	1 12E-05	1.81E-12	3.00E-05	2.44E-15	1.60E-04	1.86E-16	6.88E-07	3 15E+07	8 45E-12
PU240	4.05E+02	2 5%	10%	32	6 19E+06	1.12E-05	1 81E-12	3 00E-05	1.76E-15	1.60E-04	1.65E-18	6 11E-09	3 15E+07	5.42E-14
SM151	3 38E+02	2 5%	10%	32	6.19E+06	1 12E-05	1.81E-12	3 00E-05	1.47E-15	1 60E-04	1.13E-20	4 18E-11	3 15E+07	3 10E-16
PU239	2 04E+02	2 5%	10%	32	6.19E+06	1.12E-05	1.81E-12	3.00E-05	8 87E-16	1.60E-04	2 67E-18	9 88E-09	3.15E+07	4 41E-14
BA137M	9 27E+04	2 5%	10%	32	6 19E+06	1.12E-05	1 81E-12	3 00E-05	4 03E-13	1 60E-04	2 73E-14	1.01E-04	3.15E+07	2 05E-07
RH106	1.59E+04	2 5%	10%	32	6.19E+06	1.12E-05	1 81E-12	3 00E-05	6 91E-14	1.60E-04	9 75E-15	3 61E-05	3.15E+07	1 26E-08
PR144M	1 14E+02	2 5%	10%	32	6.19E+06	1.12E-05	1 81E-12	3 00E-05	4 95E-16	1 60E-04	1.56E-16	5 77E-07	3.15E+07	1.44E-12
AM243	4 87E+01	2 5%	10%	32	6 19E+06	1 12E-05	1.81E-12	3 00E-05	2.12E-16	1 60E-04	1 55E-15	5 74E-06	3.15E+07	6.12E-12
CM242	3 23E+01	2 5%	10%	32	6.19E+06	1.12E-05	1 81E-12	3.00E-05	1 40E-16	1.60E-04	1.89E-18	6.99E-09	3.15E+07	4.95E-15
CM243	3 63E+01	2 5%	10%	32	6 19E+06	1.12E-05	1 81E-12	3.00E-05	1.58E-16	1.60E-04	5 00E-15	1.85E-05	3.15E+07	1.47E-11
NP239	4 87E+01	2 5%	10%	32	6.19E+06	1.12E-05	1 81E-12	3 00E-05	2.12E-16	1.60E-04	6 50E-15	2.41E-05	3 15E+07	2.57E-11
NP237	3 88E-01	2 5%	10%	32	6.19E+06	1.12E-05	1.81E-12	3 00E-05	1 69E-18	1.60E-04	7 69E-16	2 85E-06	3 15E+07	2.42E-14
PU242	2.85E+00	2 5%	10%	32	6 19E+06	1.12E-05	1.81E-12	3 00E-05	1.24E-17	1 60E-04	1.43E-18	5 29E-09	3.15E+07	3 30E-16
AM242	8 72E+00	2.5%	10%	32	6.19E+06	1.12E-05	1 81E-12	3 00E-05	3 79E-17	1.60E-04	4 77E-16	1.76E-06	3 15E+07	3.37E-13
AM242M	8 76E+00	2.5%	10%	32	6.19E+06	1.12E-05	1 81E-12	3.00E-05	3 81E-17	1 60E-04	1.72E-17	6 36E-08	3.15E+07	1 22E-14
													Total	4 55E-04

MPC-32															
Normal Conditions															
Effective Dose Equivalent From Submersion															
Nuclide	Inventory (Ci/Assy)	% available for release	% remain airborne	No. Assy	MPC Vol (cm3)	L_{nor} Rate at Upstream (cm3/s)	Fraction Released per sec	Release Fraction	Release Rate (Ci/sec)	X/Q (sec/m3)	DCF (Sv/Bq)	DCF (mRem/uCi)	Occ Time (sec)	DDE (mRem)	
Gases															
H 3	3 68E+02	2.5%	100%	32	6.19E+06	1.12E-05	1.81E-12	0.30	1 60E-10	1 60E-04	0.00E+00	0 00E+00	3.15E+07	0.00E+00	
I129	3.31E-02	2.5%	100%	32	6.19E+06	1.12E-05	1.81E-12	0.30	1.44E-14	1.60E-04	1.10E-15	4 07E-06	3.15E+07	2.95E-10	
KR 85	5 86E+03	2.5%	100%	32	6 19E+06	1.12E-05	1.81E-12	0 30	2.55E-09	1 60E-04	2.20E-16	8.14E-07	3 15E+07	1 04E-05	
Crud															
Co-60	2 18E+01	100 0%	100%	32	6.19E+06	1.12E-05	1 81E-12	0.15	1 89E-10	1 60E-04	1.78E-13	6.59E-04	3.15E+07	6.28E-04	
Volatiles															
SR 90	6.32E+04	2.5%	100%	32	6 19E+06	1.12E-05	1 81E-12	2 00E-04	1.83E-11	1.60E-04	2.28E-17	8.44E-08	3.15E+07	7.78E-09	
RU106	1.59E+04	2 5%	100%	32	6.19E+06	1.12E-05	1.81E-12	2.00E-04	4 61E-12	1.60E-04	0 00E+00	0 00E+00	3.15E+07	0 00E+00	
CS134	4 04E+04	2.5%	100%	32	6.19E+06	1.12E-05	1 81E-12	2.00E-04	1.17E-11	1.60E-04	1.20E-13	4.44E-04	3.15E+07	2 62E-05	
CS137	9 82E+04	2.5%	100%	32	6.19E+06	1.12E-05	1.81E-12	2.00E-04	2.84E-11	1.60E-04	2.29E-17	8.47E-08	3.15E+07	1.21E-08	
Fines															
PU241	8.53E+04	2 5%	10%	32	6.19E+06	1.12E-05	1.81E-12	3 00E-05	3 71E-13	1.60E-04	2.19E-19	8 10E-10	3.15E+07	1.51E-12	
Y 90	6.32E+04	2 5%	10%	32	6.19E+06	1.12E-05	1.81E-12	3.00E-05	2.75E-13	1.60E-04	4 44E-16	1.64E-06	3.15E+07	2.27E-09	
PM147	2 63E+04	2.5%	10%	32	6.19E+06	1.12E-05	1.81E-12	3.00E-05	1.14E-13	1.60E-04	2.18E-18	8.07E-09	3.15E+07	4 65E-12	
CE144	8 14E+03	2.5%	10%	32	6.19E+06	1.12E-05	1.81E-12	3 00E-05	3.54E-14	1.60E-04	2.49E-15	9.21E-06	3.15E+07	1.64E-09	
PR144	8.14E+03	2 5%	10%	32	6 19E+06	1.12E-05	1.81E-12	3.00E-05	3 54E-14	1.60E-04	2.99E-15	1.11E-05	3.15E+07	1.97E-09	
EU154	5 90E+03	2.5%	10%	32	6.19E+06	1.12E-05	1.81E-12	3 00E-05	2.56E-14	1 60E-04	9.43E-14	3 49E-04	3.15E+07	4 51E-08	
CM244	1 01E+04	2.5%	10%	32	6 19E+06	1.12E-05	1.81E-12	3 00E-05	4.39E-14	1.60E-04	8 82E-18	3.26E-08	3.15E+07	7.22E-12	
PU238	5.81E+03	2 5%	10%	32	6.19E+06	1.12E-05	1.81E-12	3.00E-05	2 52E-14	1.60E-04	9.30E-18	3 44E-08	3.15E+07	4.38E-12	
SB125	2 30E+03	2.5%	10%	32	6.19E+06	1.12E-05	1.81E-12	3.00E-05	9.99E-15	1.60E-04	3.53E-14	1.31E-04	3.15E+07	6 58E-09	
EU155	1.65E+03	2.5%	10%	32	6.19E+06	1.12E-05	1.81E-12	3 00E-05	7.17E-15	1.60E-04	8 09E-15	2.99E-05	3.15E+07	1.08E-09	
AM241	9.00E+02	2.5%	10%	32	6.19E+06	1.12E-05	1.81E-12	3 00E-05	3.91E-15	1 60E-04	2.87E-15	1 06E-05	3.15E+07	2.09E-10	
TE125M	5 61E+02	2.5%	10%	32	6 19E+06	1.12E-05	1.81E-12	3 00E-05	2 44E-15	1 60E-04	1.22E-15	4 51E-06	3.15E+07	5.55E-11	
PU240	4 05E+02	2.5%	10%	32	6.19E+06	1.12E-05	1.81E-12	3.00E-05	1.76E-15	1.60E-04	9.26E-18	3.43E-08	3 15E+07	3 04E-13	
SM151	3 38E+02	2.5%	10%	32	6.19E+06	1.12E-05	1.81E-12	3.00E-05	1.47E-15	1.60E-04	7.09E-20	2 62E-10	3.15E+07	1.94E-15	
PU239	2 04E+02	2 5%	10%	32	6.19E+06	1.12E-05	1.81E-12	3 00E-05	8.87E-16	1 60E-04	9 47E-18	3.50E-08	3.15E+07	1.57E-13	
BA137M	9.27E+04	2 5%	10%	32	6.19E+06	1.12E-05	1.81E-12	3 00E-05	4 03E-13	1.60E-04	4.63E-14	1.71E-04	3.15E+07	3.48E-07	
RH106	1.59E+04	2 5%	10%	32	6.19E+06	1.12E-05	1.81E-12	3 00E-05	6 91E-14	1.60E-04	1.72E-14	6.36E-05	3.15E+07	2.22E-08	
PR144M	1.14E+02	2 5%	10%	32	6 19E+06	1.12E-05	1.81E-12	3 00E-05	4.95E-16	1 60E-04	8.16E-16	3 02E-06	3.15E+07	7.54E-12	
AM243	4.87E+01	2 5%	10%	32	6.19E+06	1.12E-05	1.81E-12	3 00E-05	2.12E-16	1.60E-04	7.47E-15	2.76E-05	3.15E+07	2 95E-11	
CM242	3 23E+01	2.5%	10%	32	6 19E+06	1.12E-05	1 81E-12	3.00E-05	1 40E-16	1.60E-04	1.06E-17	3 92E-08	3.15E+07	2.77E-14	
CM243	3 63E+01	2.5%	10%	32	6.19E+06	1.12E-05	1 81E-12	3 00E-05	1.58E-16	1.60E-04	1.50E-14	5 55E-05	3 15E+07	4.41E-11	
NP239	4.87E+01	2 5%	10%	32	6.19E+06	1.12E-05	1.81E-12	3 00E-05	2.12E-16	1.60E-04	2.00E-14	7.40E-05	3.15E+07	7.89E-11	
NP237	3 88E-01	2.5%	10%	32	6 19E+06	1.12E-05	1.81E-12	3.00E-05	1.69E-18	1.60E-04	3.20E-15	1.18E-05	3.15E+07	1.01E-13	
PU242	2 85E+00	2 5%	10%	32	6.19E+06	1.12E-05	1.81E-12	3 00E-05	1.24E-17	1 60E-04	7.90E-18	2 92E-08	3.15E+07	1.82E-15	
AM242	8.72E+00	2.5%	10%	32	6.19E+06	1.12E-05	1 81E-12	3.00E-05	3 79E-17	1 60E-04	1.88E-15	6 96E-06	3.15E+07	1.33E-12	
AM242M	8.76E+00	2 5%	10%	32	6 19E+06	1.12E-05	1.81E-12	3 00E-05	3 81E-17	1 60E-04	7.94E-17	2 94E-07	3.15E+07	5.64E-14	
													Total	6 65E-04	

MPC-32															
Normal Conditions															
Effective Dose Equivalent From Submersion															
Nuclide	Inventory (Ci/Assy)	% available for release	% remain airborne	No Assy	MPC Vol (cm3)	L_{nor} Rate at Upstream (cm3/s)	Fraction Released per sec	Release Fraction	Release Rate (Ci/sec)	X/Q (sec/m3)	DCF (Sv/Bq)	DCF (mRem/uCi)	Occ Time (sec)	DDE (mRem)	
Gases															
H 3	3.68E+02	2 5%	100%	32	6.19E+06	1.12E-05	1.81E-12	0.30	1.60E-10	1.60E-04	0.00E+00	0.00E+00	3.15E+07	0 00E+00	
I129	3 31E-02	2 5%	100%	32	6 19E+06	1.12E-05	1.81E-12	0.30	1 44E-14	1.60E-04	3.86E-16	1 43E-06	3.15E+07	1.04E-10	
KR 85	5 86E+03	2 5%	100%	32	6 19E+06	1.12E-05	1.81E-12	0 30	2 55E-09	1 60E-04	1.18E-16	4.37E-07	3.15E+07	5.60E-06	
Crud															
Co-60	2.18E+01	100 0%	100%	32	6.19E+06	1.12E-05	1 81E-12	0.15	1 89E-10	1 60E-04	1 27E-13	4.70E-04	3 15E+07	4 48E-04	
Volatiles															
SR 90	6.32E+04	2.5%	100%	32	6.19E+06	1.12E-05	1.81E-12	2 00E-04	1.83E-11	1.60E-04	7.33E-18	2 71E-08	3.15E+07	2 50E-09	
RU106	1.59E+04	2 5%	100%	32	6.19E+06	1.12E-05	1.81E-12	2 00E-04	4 61E-12	1 60E-04	0 00E+00	0.00E+00	3 15E+07	0 00E+00	
CS134	4 04E+04	2.5%	100%	32	6.19E+06	1.12E-05	1 81E-12	2 00E-04	1.17E-11	1 60E-04	7 57E-14	2.80E-04	3.15E+07	1 65E-05	
CS137	9 82E+04	2.5%	100%	32	6.19E+06	1.12E-05	1.81E-12	2 00E-04	2.84E-11	1.60E-04	7.55E-18	2.79E-08	3.15E+07	4 01E-09	
Fines															
PU241	8 53E+04	2.5%	10%	32	6.19E+06	1.12E-05	1 81E-12	3 00E-05	3.71E-13	1.60E-04	6.98E-20	2 58E-10	3.15E+07	4.82E-13	
Y 90	6 32E+04	2.5%	10%	32	6.19E+06	1.12E-05	1.81E-12	3.00E-05	2 75E-13	1.60E-04	1 87E-16	6.92E-07	3.15E+07	9.58E-10	
PM147	2 63E+04	2 5%	10%	32	6 19E+06	1.12E-05	1 81E-12	3.00E-05	1.14E-13	1.60E-04	6.75E-19	2.50E-09	3.15E+07	1.44E-12	
CE144	8 14E+03	2.5%	10%	32	6.19E+06	1.12E-05	1.81E-12	3 00E-05	3 54E-14	1.60E-04	8.33E-16	3 08E-06	3.15E+07	5 49E-10	
PR144	8.14E+03	2 5%	10%	32	6.19E+06	1.12E-05	1.81E-12	3 00E-05	3 54E-14	1.60E-04	1.95E-15	7.22E-06	3 15E+07	1 29E-09	
EU154	5 90E+03	2 5%	10%	32	6.19E+06	1.12E-05	1.81E-12	3 00E-05	2.56E-14	1 60E-04	6.15E-14	2 28E-04	3 15E+07	2 94E-08	
CM244	1 01E+04	2.5%	10%	32	6.19E+06	1.12E-05	1.81E-12	3.00E-05	4.39E-14	1.60E-04	4.19E-18	1 55E-08	3 15E+07	3 43E-12	
PU238	5 81E+03	2.5%	10%	32	6.19E+06	1.12E-05	1 81E-12	3 00E-05	2.52E-14	1.60E-04	4.01E-18	1.48E-08	3.15E+07	1.89E-12	
SB125	2.30E+03	2 5%	10%	32	6.19E+06	1.12E-05	1 81E-12	3 00E-05	9 99E-15	1 60E-04	2.01E-14	7 44E-05	3.15E+07	3.74E-09	
EU155	1 65E+03	2.5%	10%	32	6.19E+06	1 12E-05	1.81E-12	3 00E-05	7.17E-15	1 60E-04	2.41E-15	8.92E-06	3.15E+07	3 22E-10	
AM241	9.00E+02	2 5%	10%	32	6 19E+06	1.12E-05	1 81E-12	3 00E-05	3 91E-15	1.60E-04	7.83E-16	2.90E-06	3 15E+07	5 71E-11	
TE125M	5 61E+02	2 5%	10%	32	6 19E+06	1.12E-05	1.81E-12	3.00E-05	2 44E-15	1.60E-04	4 64E-16	1.72E-06	3 15E+07	2.11E-11	
PU240	4 05E+02	2 5%	10%	32	6 19E+06	1.12E-05	1 81E-12	3 00E-05	1.76E-15	1.60E-04	3 92E-18	1 45E-08	3.15E+07	1 29E-13	
SM151	3.38E+02	2.5%	10%	32	6 19E+06	1.12E-05	1.81E-12	3 00E-05	1.47E-15	1 60E-04	3.58E-20	1.32E-10	3 15E+07	9.81E-16	
PU239	2 04E+02	2 5%	10%	32	6.19E+06	1.12E-05	1.81E-12	3.00E-05	8 87E-16	1.60E-04	3.88E-18	1.44E-08	3.15E+07	6 41E-14	
BA137M	9 27E+04	2.5%	10%	32	6.19E+06	1.12E-05	1.81E-12	3 00E-05	4 03E-13	1.60E-04	2 88E-14	1.07E-04	3.15E+07	2.16E-07	
RH106	1 59E+04	2 5%	10%	32	6.19E+06	1.12E-05	1 81E-12	3 00E-05	6 91E-14	1.60E-04	1 03E-14	3 81E-05	3.15E+07	1 33E-08	
PR144M	1 14E+02	2.5%	10%	32	6.19E+06	1.12E-05	1 81E-12	3 00E-05	4 95E-16	1.60E-04	2 81E-16	1.04E-06	3 15E+07	2 60E-12	
AM243	4 87E+01	2.5%	10%	32	6.19E+06	1.12E-05	1 81E-12	3.00E-05	2 12E-16	1.60E-04	2 09E-15	7 73E-06	3.15E+07	8 25E-12	
CM242	3.23E+01	2 5%	10%	32	6.19E+06	1 12E-05	1.81E-12	3 00E-05	1.40E-16	1 60E-04	4 91E-18	1 82E-08	3.15E+07	1.29E-14	
CM243	3 63E+01	2 5%	10%	32	6.19E+06	1.12E-05	1.81E-12	3 00E-05	1.58E-16	1 60E-04	5 76E-15	2 13E-05	3 15E+07	1.69E-11	
NP239	4 87E+01	2.5%	10%	32	6 19E+06	1.12E-05	1 81E-12	3 00E-05	2.12E-16	1.60E-04	7.52E-15	2 78E-05	3.15E+07	2 97E-11	
NP237	3.88E-01	2 5%	10%	32	6.19E+06	1.12E-05	1 81E-12	3 00E-05	1 69E-18	1 60E-04	9 94E-16	3 68E-06	3.15E+07	3 13E-14	
PU242	2 85E+00	2.5%	10%	32	6.19E+06	1.12E-05	1 81E-12	3 00E-05	1.24E-17	1.60E-04	3.32E-18	1.23E-08	3.15E+07	7.67E-16	
AM242	8.72E+00	2 5%	10%	32	6.19E+06	1.12E-05	1.81E-12	3 00E-05	3 79E-17	1 60E-04	5 94E-16	2 20E-06	3.15E+07	4.20E-13	
AM242M	8.76E+00	2 5%	10%	32	6.19E+06	1.12E-05	1.81E-12	3 00E-05	3 81E-17	1.60E-04	2 95E-17	1 09E-07	3.15E+07	2 09E-14	
													Total	4 71E-04	

MPC-32															
Normal Conditions															
Effective Dose Equivalent From Submersion															
Nuclide	Inventory (Ci/Assy)	% available for release	% remain airborne	No Assy	MPC Vol (cm3)	L_{nor} Rate at Upstream (cm3/s)	Fraction Released per sec	Release Fraction	Release Rate (Ci/sec)	X/Q (sec/m3)	DCF (Sv/Bq)	DCF (mRem/uCi)	Occ Time (sec)	DDE (mRem)	
Gases															
H 3	3 68E+02	2.5%	100%	32	6.19E+06	1.12E-05	1.81E-12	0 30	1 60E-10	1 60E-04	3.31E-19	1.22E-09	3.15E+07	9.87E-10	
I129	3 31E-02	2 5%	100%	32	6.19E+06	1.12E-05	1.81E-12	0.30	1 44E-14	1.60E-04	3.80E-16	1.41E-06	3.15E+07	1.02E-10	
KR 85	5.86E+03	2.5%	100%	32	6.19E+06	1.12E-05	1.81E-12	0 30	2.55E-09	1.60E-04	1.19E-16	4 40E-07	3 15E+07	5 65E-06	
Crud															
Co-60	2 18E+01	100 0%	100%	32	6.19E+06	1.12E-05	1 81E-12	0.15	1 89E-10	1.60E-04	1.26E-13	4.66E-04	3.15E+07	4.45E-04	
Volatiles															
SR 90	6 32E+04	2 5%	100%	32	6.19E+06	1.12E-05	1.81E-12	2 00E-04	1.83E-11	1 60E-04	7.53E-18	2.79E-08	3 15E+07	2 57E-09	
RU106	1.59E+04	2.5%	100%	32	6.19E+06	1.12E-05	1.81E-12	2 00E-04	4 61E-12	1 60E-04	0 00E+00	0 00E+00	3.15E+07	0 00E+00	
CS134	4 04E+04	2.5%	100%	32	6.19E+06	1.12E-05	1.81E-12	2.00E-04	1.17E-11	1 60E-04	7.57E-14	2 80E-04	3 15E+07	1.65E-05	
CS137	9 82E+04	2.5%	100%	32	6.19E+06	1.12E-05	1 81E-12	2 00E-04	2.84E-11	1.60E-04	7.74E-18	2 86E-08	3 15E+07	4.11E-09	
Fines															
PU241	8 53E+04	2 5%	10%	32	6.19E+06	1.12E-05	1 81E-12	3 00E-05	3 71E-13	1 60E-04	7.25E-20	2.68E-10	3.15E+07	5.01E-13	
Y 90	6.32E+04	2.5%	10%	32	6.19E+06	1.12E-05	1 81E-12	3.00E-05	2.75E-13	1.60E-04	1.90E-16	7.03E-07	3.15E+07	9.73E-10	
PM147	2 63E+04	2 5%	10%	32	6 19E+06	1.12E-05	1.81E-12	3 00E-05	1.14E-13	1.60E-04	6.93E-19	2.56E-09	3.15E+07	1.48E-12	
CE144	8 14E+03	2 5%	10%	32	6.19E+06	1.12E-05	1.81E-12	3 00E-05	3 54E-14	1.60E-04	8.53E-16	3.16E-06	3.15E+07	5.63E-10	
PR144	8.14E+03	2 5%	10%	32	6.19E+06	1.12E-05	1.81E-12	3 00E-05	3 54E-14	1 60E-04	1.95E-15	7.22E-06	3.15E+07	1 29E-09	
EU154	5 90E+03	2 5%	10%	32	6.19E+06	1.12E-05	1.81E-12	3 00E-05	2.56E-14	1.60E-04	6.14E-14	2 27E-04	3.15E+07	2.94E-08	
CM244	1.01E+04	2 5%	10%	32	6.19E+06	1.12E-05	1.81E-12	3.00E-05	4.39E-14	1 60E-04	4.91E-18	1 82E-08	3 15E+07	4 02E-12	
PU238	5 81E+03	2.5%	10%	32	6.19E+06	1.12E-05	1.81E-12	3.00E-05	2 52E-14	1.60E-04	4.88E-18	1 81E-08	3.15E+07	2.30E-12	
SB125	2 30E+03	2.5%	10%	32	6.19E+06	1.12E-05	1.81E-12	3 00E-05	9 99E-15	1.60E-04	2.02E-14	7.47E-05	3.15E+07	3.76E-09	
EU155	1 65E+03	2.5%	10%	32	6 19E+06	1.12E-05	1.81E-12	3.00E-05	7.17E-15	1 60E-04	2 49E-15	9 21E-06	3.15E+07	3 33E-10	
AM241	9.00E+02	2 5%	10%	32	6.19E+06	1.12E-05	1.81E-12	3 00E-05	3 91E-15	1.60E-04	8.18E-16	3 03E-06	3.15E+07	5.97E-11	
TE125M	5 61E+02	2.5%	10%	32	6.19E+06	1.12E-05	1.81E-12	3.00E-05	2.44E-15	1 60E-04	4.53E-16	1 68E-06	3 15E+07	2.06E-11	
PU240	4 05E+02	2 5%	10%	32	6.19E+06	1.12E-05	1.81E-12	3 00E-05	1.76E-15	1.60E-04	4.75E-18	1.76E-08	3.15E+07	1.56E-13	
SM151	3 38E+02	2 5%	10%	32	6 19E+06	1.12E-05	1.81E-12	3 00E-05	1.47E-15	1 60E-04	3.61E-20	1.34E-10	3.15E+07	9.89E-16	
PU239	2 04E+02	2.5%	10%	32	6.19E+06	1.12E-05	1 81E-12	3 00E-05	8.87E-16	1.60E-04	4.24E-18	1.57E-08	3.15E+07	7.01E-14	
BA137M	9 27E+04	2.5%	10%	32	6.19E+06	1.12E-05	1.81E-12	3 00E-05	4 03E-13	1.60E-04	2.88E-14	1.07E-04	3 15E+07	2.16E-07	
RH106	1 59E+04	2.5%	10%	32	6.19E+06	1.12E-05	1.81E-12	3.00E-05	6 91E-14	1 60E-04	1.04E-14	3.85E-05	3.15E+07	1.34E-08	
PR144M	1.14E+02	2.5%	10%	32	6.19E+06	1.12E-05	1 81E-12	3.00E-05	4 95E-16	1.60E-04	2.79E-16	1.03E-06	3.15E+07	2.58E-12	
AM243	4 87E+01	2.5%	10%	32	6.19E+06	1.12E-05	1.81E-12	3 00E-05	2.12E-16	1.60E-04	2.18E-15	8 07E-06	3.15E+07	8 60E-12	
CM242	3 23E+01	2 5%	10%	32	6.19E+06	1.12E-05	1.81E-12	3.00E-05	1 40E-16	1.60E-04	5.69E-18	2.11E-08	3.15E+07	1.49E-14	
CM243	3.63E+01	2.5%	10%	32	6.19E+06	1.12E-05	1.81E-12	3 00E-05	1.58E-16	1.60E-04	5.88E-15	2.18E-05	3.15E+07	1.73E-11	
NP239	4 87E+01	2 5%	10%	32	6.19E+06	1.12E-05	1.81E-12	3 00E-05	2.12E-16	1 60E-04	7.69E-15	2.85E-05	3.15E+07	3.03E-11	
NP237	3.88E-01	2 5%	10%	32	6.19E+06	1.12E-05	1.81E-12	3 00E-05	1.69E-18	1.60E-04	1.03E-15	3 81E-06	3.15E+07	3.24E-14	
PU242	2 85E+00	2.5%	10%	32	6.19E+06	1.12E-05	1.81E-12	3 00E-05	1.24E-17	1.60E-04	4 01E-18	1.48E-08	3.15E+07	9.26E-16	
AM242	8.72E+00	2 5%	10%	32	6.19E+06	1.12E-05	1.81E-12	3 00E-05	3 79E-17	1.60E-04	6.15E-16	2 28E-06	3.15E+07	4.35E-13	
AM242M	8 76E+00	2 5%	10%	32	6.19E+06	1.12E-05	1.81E-12	3 00E-05	3.81E-17	1 60E-04	3.17E-17	1.17E-07	3.15E+07	2 25E-14	
													Total	4 67E-04	

MPC-32															
Normal Conditions															
Effective Dose Equivalent From Submersion															
Nuclide	Inventory (Ci/Assy)	% available for release	% remain airborne	No. Assy	MPC Vol (cm3)	L_{nor} Rate at Upstream (cm3/s)	Fraction Released per sec	Release Fraction	Release Rate (Ci/sec)	X/Q (sec/m3)	DCF (Sv/Bq)	DCF (mRem/uCi)	Occ Time (sec)	SDE (mRem)	
Gases															
H 3	3 68E+02	2 5%	100%	32	6.19E+06	1.12E-05	1.81E-12	0 30	1 60E-10	1.60E-04	0 00E+00	0.00E+00	3 15E+07	0 00E+00	
I129	3 31E-02	2.5%	100%	32	6.19E+06	1.12E-05	1 81E-12	0 30	1 44E-14	1 60E-04	1.10E-15	4.07E-06	3.15E+07	2 95E-10	
KR 85	5 86E+03	2.5%	100%	32	6.19E+06	1.12E-05	1 81E-12	0.30	2 55E-09	1.60E-04	1.32E-14	4.88E-05	3.15E+07	6 27E-04	
Crud															
Co-60	2.18E+01	100 0%	100%	32	6.19E+06	1.12E-05	1.81E-12	0.15	1.89E-10	1.60E-04	1 45E-13	5.37E-04	3.15E+07	5.12E-04	
Volatiles															
SR 90	6 32E+04	2.5%	100%	32	6.19E+06	1.12E-05	1 81E-12	2.00E-04	1.83E-11	1.60E-04	9.20E-15	3 40E-05	3.15E+07	3.14E-06	
RU106	1 59E+04	2 5%	100%	32	6 19E+06	1.12E-05	1.81E-12	2 00E-04	4 61E-12	1 60E-04	0.00E+00	0 00E+00	3.15E+07	0 00E+00	
CS134	4 04E+04	2.5%	100%	32	6 19E+06	1.12E-05	1 81E-12	2.00E-04	1.17E-11	1.60E-04	9 45E-14	3.50E-04	3.15E+07	2 06E-05	
CS137	9 82E+04	2 5%	100%	32	6.19E+06	1 12E-05	1 81E-12	2 00E-04	2.84E-11	1 60E-04	8 63E-15	3.19E-05	3.15E+07	4 58E-06	
Fines															
PU241	8 53E+04	2 5%	10%	32	6.19E+06	1.12E-05	1.81E-12	3 00E-05	3.71E-13	1.60E-04	1.17E-19	4.33E-10	3.15E+07	8.09E-13	
Y 90	6 32E+04	2 5%	10%	32	6.19E+06	1.12E-05	1 81E-12	3 00E-05	2.75E-13	1.60E-04	6 24E-14	2 31E-04	3 15E+07	3 20E-07	
PM147	2 63E+04	2 5%	10%	32	6.19E+06	1.12E-05	1 81E-12	3 00E-05	1.14E-13	1.60E-04	8 11E-16	3 00E-06	3 15E+07	1.73E-09	
CE144	8 14E+03	2.5%	10%	32	6 19E+06	1.12E-05	1 81E-12	3 00E-05	3 54E-14	1 60E-04	2 93E-15	1 08E-05	3.15E+07	1 93E-09	
PR144	8 14E+03	2 5%	10%	32	6.19E+06	1.12E-05	1.81E-12	3 00E-05	3.54E-14	1.60E-04	8 43E-14	3.12E-04	3.15E+07	5.56E-08	
EU154	5 90E+03	2 5%	10%	32	6 19E+06	1.12E-05	1 81E-12	3.00E-05	2.56E-14	1.60E-04	8 29E-14	3.07E-04	3.15E+07	3 96E-08	
CM244	1.01E+04	2 5%	10%	32	6.19E+06	1.12E-05	1 81E-12	3.00E-05	4.39E-14	1.60E-04	3 91E-17	1 45E-07	3.15E+07	3 20E-11	
PU238	5 81E+03	2.5%	10%	32	6 19E+06	1.12E-05	1.81E-12	3 00E-05	2 52E-14	1 60E-04	4 09E-17	1.51E-07	3.15E+07	1.93E-11	
SB125	2 30E+03	2.5%	10%	32	6.19E+06	1.12E-05	1 81E-12	3 00E-05	9.99E-15	1 60E-04	2.65E-14	9 81E-05	3 15E+07	4 94E-09	
EU155	1 65E+03	2.5%	10%	32	6.19E+06	1.12E-05	1.81E-12	3 00E-05	7.17E-15	1 60E-04	3.39E-15	1 25E-05	3.15E+07	4 53E-10	
AM241	9 00E+02	2.5%	10%	32	6.19E+06	1.12E-05	1.81E-12	3 00E-05	3 91E-15	1.60E-04	1.28E-15	4.74E-06	3 15E+07	9 34E-11	
TE125M	5 61E+02	2 5%	10%	32	6 19E+06	1.12E-05	1 81E-12	3.00E-05	2 44E-15	1.60E-04	1 94E-15	7.18E-06	3 15E+07	8 82E-11	
PU240	4 05E+02	2 5%	10%	32	6 19E+06	1.12E-05	1.81E-12	3 00E-05	1.76E-15	1 60E-04	3.92E-17	1.45E-07	3.15E+07	1.29E-12	
SM151	3 38E+02	2 5%	10%	32	6.19E+06	1.12E-05	1.81E-12	3 00E-05	1.47E-15	1.60E-04	1.90E-19	7 03E-10	3.15E+07	5 20E-15	
PU239	2 04E+02	2 5%	10%	32	6.19E+06	1.12E-05	1 81E-12	3 00E-05	8 87E-16	1.60E-04	1.86E-17	6 88E-08	3.15E+07	3 07E-13	
BA137M	9 27E+04	2 5%	10%	32	6.19E+06	1.12E-05	1 81E-12	3 00E-05	4.03E-13	1 60E-04	3 73E-14	1.38E-04	3.15E+07	2 80E-07	
RH106	1.59E+04	2 5%	10%	32	6.19E+06	1.12E-05	1 81E-12	3.00E-05	6 91E-14	1 60E-04	1 09E-13	4 03E-04	3.15E+07	1 40E-07	
PR144M	1.14E+02	2 5%	10%	32	6 19E+06	1.12E-05	1.81E-12	3 00E-05	4.95E-16	1 60E-04	5 08E-16	1 88E-06	3.15E+07	4 69E-12	
AM243	4 87E+01	2 5%	10%	32	6.19E+06	1.12E-05	1 81E-12	3 00E-05	2 12E-16	1 60E-04	2 75E-15	1.02E-05	3 15E+07	1.09E-11	
CM242	3 23E+01	2.5%	10%	32	6.19E+06	1.12E-05	1 81E-12	3 00E-05	1 40E-16	1.60E-04	4 29E-17	1 59E-07	3 15E+07	1.12E-13	
CM243	3 63E+01	2 5%	10%	32	6.19E+06	1.12E-05	1 81E-12	3.00E-05	1 58E-16	1.60E-04	9 79E-15	3 62E-05	3 15E+07	2 88E-11	
NP239	4 87E+01	2 5%	10%	32	6.19E+06	1 12E-05	1.81E-12	3 00E-05	2.12E-16	1.60E-04	1 60E-14	5 92E-05	3 15E+07	6.31E-11	
NP237	3 88E-01	2 5%	10%	32	6 19E+06	1.12E-05	1.81E-12	3 00E-05	1.69E-18	1.60E-04	1.54E-15	5.70E-06	3.15E+07	4.84E-14	
PU242	2.85E+00	2 5%	10%	32	6.19E+06	1.12E-05	1 81E-12	3.00E-05	1.24E-17	1 60E-04	3 27E-17	1.21E-07	3.15E+07	7.55E-15	
AM242	8.72E+00	2 5%	10%	32	6 19E+06	1.12E-05	1.81E-12	3 00E-05	3.79E-17	1 60E-04	8 20E-15	3.03E-05	3.15E+07	5 79E-12	
AM242M	8 76E+00	2 5%	10%	32	6.19E+06	1.12E-05	1 81E-12	3 00E-05	3 81E-17	1 60E-04	1 36E-16	5 03E-07	3.15E+07	9.65E-14	
													Total	1.17E-03	

MPC-32															
Off-Normal Conditions															
Effective Dose Equivalent From Submersion															
Nuclide	Inventory (Ci/Assy)	% available for release	% remain airborne	No Assy	MPC Vol (cm3)	L_{offnor} Rate at Upstream (cm3/s)	Fraction Released per sec	Release Fraction	Release Rate (Ci/sec)	X/Q (sec/m3)	DCF (Sv/Bq)	DCF (mRem/uCi)	Occ Time (sec)	DDE (mRem)	
Gases															
H 3	3 68E+02	11.5%	100%	32	6.19E+06	1.12E-05	1 81E-12	0 30	7.36E-10	1.60E-04	0 00E+00	0 00E+00	3.15E+07	0 00E+00	
I129	3.31E-02	11.5%	100%	32	6.19E+06	1 12E-05	1 81E-12	0.30	6 62E-14	1.60E-04	4.83E-16	1.79E-06	3.15E+07	5.96E-10	
KR 85	5 86E+03	11 5%	100%	32	6.19E+06	1.12E-05	1.81E-12	0 30	1.17E-08	1.60E-04	1.17E-16	4.33E-07	3.15E+07	2 56E-05	
Crud															
Co-60	2.18E+01	100 0%	100%	32	6.19E+06	1.12E-05	1 81E-12	0 15	1.89E-10	1.60E-04	1.23E-13	4 55E-04	3.15E+07	4 34E-04	
Volatiles															
SR 90	6.32E+04	11.5%	100%	32	6.19E+06	1.12E-05	1.81E-12	2.00E-04	8 42E-11	1 60E-04	7.78E-18	2.88E-08	3.15E+07	1.22E-08	
RU106	1.59E+04	11.5%	100%	32	6.19E+06	1.12E-05	1.81E-12	2 00E-04	2.12E-11	1.60E-04	0.00E+00	0 00E+00	3.15E+07	0.00E+00	
CS134	4.04E+04	11 5%	100%	32	6.19E+06	1.12E-05	1.81E-12	2 00E-04	5 38E-11	1.60E-04	7.40E-14	2.74E-04	3.15E+07	7.43E-05	
CS137	9 82E+04	11 5%	100%	32	6.19E+06	1.12E-05	1.81E-12	2.00E-04	1.31E-10	1.60E-04	7.96E-18	2.95E-08	3.15E+07	1.94E-08	
Fines															
PU241	8 53E+04	11.5%	10%	32	6.19E+06	1.12E-05	1.81E-12	3 00E-05	1 71E-12	1 60E-04	7.19E-20	2.66E-10	3.15E+07	2.29E-12	
Y 90	6 32E+04	11 5%	10%	32	6 19E+06	1.12E-05	1.81E-12	3 00E-05	1.26E-12	1.60E-04	1 89E-16	6 99E-07	3.15E+07	4 45E-09	
PM147	2 63E+04	11 5%	10%	32	6.19E+06	1.12E-05	1 81E-12	3 00E-05	5.26E-13	1 60E-04	7.48E-19	2.77E-09	3.15E+07	7.33E-12	
CE144	8.14E+03	11.5%	10%	32	6.19E+06	1 12E-05	1.81E-12	3.00E-05	1 63E-13	1.60E-04	8.53E-16	3.16E-06	3.15E+07	2.59E-09	
PR144	8.14E+03	11.5%	10%	32	6 19E+06	1.12E-05	1.81E-12	3 00E-05	1.63E-13	1.60E-04	1.90E-15	7 03E-06	3 15E+07	5.77E-09	
EU154	5 90E+03	11.5%	10%	32	6.19E+06	1.12E-05	1.81E-12	3 00E-05	1.18E-13	1 60E-04	6 00E-14	2.22E-04	3.15E+07	1.32E-07	
CM244	1 01E+04	11 5%	10%	32	6.19E+06	1.12E-05	1 81E-12	3 00E-05	2.02E-13	1.60E-04	6 90E-18	2.55E-08	3.15E+07	2.60E-11	
PU238	5 81E+03	11 5%	10%	32	6.19E+06	1.12E-05	1 81E-12	3.00E-05	1.16E-13	1 60E-04	6.56E-18	2.43E-08	3.15E+07	1.42E-11	
SB125	2.30E+03	11.5%	10%	32	6.19E+06	1.12E-05	1.81E-12	3 00E-05	4 60E-14	1.60E-04	1.98E-14	7.33E-05	3.15E+07	1.70E-08	
EU155	1.65E+03	11 5%	10%	32	6.19E+06	1.12E-05	1 81E-12	3.00E-05	3.30E-14	1 60E-04	2 49E-15	9 21E-06	3.15E+07	1.53E-09	
AM241	9 00E+02	11.5%	10%	32	6.19E+06	1.12E-05	1.81E-12	3 00E-05	1 80E-14	1.60E-04	8.58E-16	3.17E-06	3.15E+07	2.88E-10	
TE125M	5 61E+02	11.5%	10%	32	6 19E+06	1.12E-05	1 81E-12	3 00E-05	1.12E-14	1.60E-04	5 96E-16	2 21E-06	3 15E+07	1.25E-10	
PU240	4 05E+02	11 5%	10%	32	6.19E+06	1.12E-05	1.81E-12	3 00E-05	8.10E-15	1 60E-04	6 36E-18	2.35E-08	3.15E+07	9 60E-13	
SM151	3 38E+02	11.5%	10%	32	6.19E+06	1.12E-05	1 81E-12	3.00E-05	6.76E-15	1.60E-04	5.20E-20	1.92E-10	3.15E+07	6 55E-15	
PU239	2 04E+02	11.5%	10%	32	6.19E+06	1.12E-05	1.81E-12	3.00E-05	4.08E-15	1.60E-04	4 84E-18	1.79E-08	3.15E+07	3 68E-13	
BA137M	9 27E+04	11 5%	10%	32	6.19E+06	1.12E-05	1 81E-12	3 00E-05	1.85E-12	1 60E-04	2 82E-14	1.04E-04	3.15E+07	9.74E-07	
RH106	1.59E+04	11.5%	10%	32	6.19E+06	1.12E-05	1.81E-12	3 00E-05	3.18E-13	1 60E-04	1 01E-14	3.74E-05	3 15E+07	5 99E-08	
PR144M	1.14E+02	11 5%	10%	32	6.19E+06	1.12E-05	1 81E-12	3 00E-05	2 28E-15	1.60E-04	3.25E-16	1 20E-06	3.15E+07	1.38E-11	
AM243	4 87E+01	11 5%	10%	32	6.19E+06	1.12E-05	1 81E-12	3 00E-05	9.74E-16	1 60E-04	2.19E-15	8.10E-06	3.15E+07	3 98E-11	
CM242	3.23E+01	11.5%	10%	32	6.19E+06	1.12E-05	1 81E-12	3 00E-05	6 46E-16	1 60E-04	7 83E-18	2.90E-08	3.15E+07	9.43E-14	
CM243	3.63E+01	11 5%	10%	32	6.19E+06	1.12E-05	1.81E-12	3 00E-05	7.26E-16	1 60E-04	5 77E-15	2.13E-05	3.15E+07	7.81E-11	
NP239	4.87E+01	11 5%	10%	32	6.19E+06	1.12E-05	1 81E-12	3 00E-05	9.74E-16	1 60E-04	7.53E-15	2.79E-05	3.15E+07	1.37E-10	
NP237	3 88E-01	11 5%	10%	32	6.19E+06	1 12E-05	1.81E-12	3 00E-05	7.76E-18	1 60E-04	1.04E-15	3 85E-06	3.15E+07	1.50E-13	
PU242	2 85E+00	11 5%	10%	32	6 19E+06	1.12E-05	1 81E-12	3 00E-05	5 70E-17	1 60E-04	5 34E-18	1.98E-08	3.15E+07	5 67E-15	
AM242	8 72E+00	11.5%	10%	32	6.19E+06	1.12E-05	1.81E-12	3.00E-05	1.74E-16	1 60E-04	6 09E-16	2 25E-06	3.15E+07	1.98E-12	
AM242M	8.76E+00	11 5%	10%	32	6.19E+06	1.12E-05	1.81E-12	3 00E-05	1.75E-16	1.60E-04	3.80E-17	1.41E-07	3.15E+07	1.24E-13	
													Total	5 35E-04	

MPC-32														
Off-Normal Conditions														
Effective Dose Equivalent From Submersion														
Nuclide	Inventory (Ci/Assy)	% available for release	% remain airborne	No. Assy	MPC Vol (cm3)	L_{offnor} Rate at Upstream (cm3/s)	Fraction Released per sec	Release Fraction	Release Rate (Ci/sec)	X/Q (sec/m3)	DCF (Sv/Bq)	DCF (mRem/uCi)	Occ Time (sec)	DDE (mRem)
Gases														
H 3	3 68E+02	11.5%	100%	32	6.19E+06	1.12E-05	1.81E-12	0 30	7.36E-10	1.60E-04	0 00E+00	0.00E+00	3 15E+07	0.00E+00
I129	3 31E-02	11.5%	100%	32	6 19E+06	1.12E-05	1.81E-12	0 30	6 62E-14	1 60E-04	6.66E-16	2 46E-06	3.15E+07	8.22E-10
KR 85	5.86E+03	11 5%	100%	32	6 19E+06	1.12E-05	1 81E-12	0.30	1.17E-08	1.60E-04	1.34E-16	4 96E-07	3.15E+07	2.93E-05
Crud														
Co-60	2 18E+01	100.0%	100%	32	6.19E+06	1.12E-05	1.81E-12	0 15	1.89E-10	1 60E-04	1 39E-13	5.14E-04	3.15E+07	4.90E-04
Volatiles														
SR 90	6 32E+04	11.5%	100%	32	6.19E+06	1.12E-05	1.81E-12	2 00E-04	8.42E-11	1.60E-04	9 49E-18	3 51E-08	3.15E+07	1.49E-08
RU106	1.59E+04	11 5%	100%	32	6 19E+06	1.12E-05	1 81E-12	2 00E-04	2.12E-11	1.60E-04	0.00E+00	0 00E+00	3.15E+07	0.00E+00
CS134	4 04E+04	11.5%	100%	32	6.19E+06	1.12E-05	1 81E-12	2 00E-04	5.38E-11	1.60E-04	8.43E-14	3.12E-04	3.15E+07	8.46E-05
CS137	9 82E+04	11 5%	100%	32	6.19E+06	1 12E-05	1 81E-12	2.00E-04	1.31E-10	1.60E-04	9 67E-18	3 58E-08	3.15E+07	2.36E-08
Fines														
PU241	8.53E+04	11 5%	10%	32	6 19E+06	1.12E-05	1 81E-12	3 00E-05	1.71E-12	1 60E-04	8.67E-20	3 21E-10	3.15E+07	2.76E-12
Y 90	6 32E+04	11 5%	10%	32	6.19E+06	1.12E-05	1 81E-12	3 00E-05	1 26E-12	1.60E-04	2.20E-16	8.14E-07	3.15E+07	5 18E-09
PM147	2 63E+04	11.5%	10%	32	6.19E+06	1.12E-05	1 81E-12	3 00E-05	5 26E-13	1.60E-04	9 56E-19	3 54E-09	3.15E+07	9.37E-12
CE144	8 14E+03	11 5%	10%	32	6.19E+06	1.12E-05	1 81E-12	3.00E-05	1 63E-13	1.60E-04	1.01E-15	3.74E-06	3.15E+07	3.06E-09
PR144	8.14E+03	11 5%	10%	32	6 19E+06	1.12E-05	1 81E-12	3 00E-05	1.63E-13	1.60E-04	2.15E-15	7.96E-06	3.15E+07	6 52E-09
EU154	5 90E+03	11 5%	10%	32	6.19E+06	1 12E-05	1.81E-12	3 00E-05	1.18E-13	1 60E-04	6 81E-14	2.52E-04	3.15E+07	1 50E-07
CM244	1 01E+04	11.5%	10%	32	6.19E+06	1.12E-05	1.81E-12	3.00E-05	2 02E-13	1.60E-04	1.33E-17	4 92E-08	3.15E+07	5 01E-11
PU238	5 81E+03	11.5%	10%	32	6.19E+06	1.12E-05	1.81E-12	3 00E-05	1.16E-13	1 60E-04	1 27E-17	4.70E-08	3.15E+07	2 75E-11
SB125	2.30E+03	11.5%	10%	32	6 19E+06	1.12E-05	1.81E-12	3 00E-05	4 60E-14	1 60E-04	2.27E-14	8 40E-05	3 15E+07	1 95E-08
EU155	1 65E+03	11.5%	10%	32	6.19E+06	1.12E-05	1 81E-12	3 00E-05	3.30E-14	1.60E-04	2.95E-15	1.09E-05	3.15E+07	1 81E-09
AM241	9.00E+02	11.5%	10%	32	6.19E+06	1.12E-05	1 81E-12	3 00E-05	1.80E-14	1.60E-04	1.07E-15	3.96E-06	3.15E+07	3 59E-10
TE125M	5 61E+02	11 5%	10%	32	6 19E+06	1.12E-05	1 81E-12	3 00E-05	1 12E-14	1.60E-04	8 48E-16	3 14E-06	3.15E+07	1.77E-10
PU240	4 05E+02	11.5%	10%	32	6.19E+06	1.12E-05	1.81E-12	3 00E-05	8.10E-15	1.60E-04	1.23E-17	4.55E-08	3.15E+07	1 86E-12
SM151	3 38E+02	11.5%	10%	32	6.19E+06	1 12E-05	1.81E-12	3 00E-05	6.76E-15	1.60E-04	8 80E-20	3 26E-10	3.15E+07	1.11E-14
PU239	2 04E+02	11.5%	10%	32	6 19E+06	1.12E-05	1 81E-12	3.00E-05	4 08E-15	1 60E-04	7.55E-18	2.79E-08	3.15E+07	5.74E-13
BA137M	9 27E+04	11 5%	10%	32	6 19E+06	1.12E-05	1 81E-12	3 00E-05	1 85E-12	1 60E-04	3.22E-14	1.19E-04	3.15E+07	1.11E-06
RH106	1 59E+04	11 5%	10%	32	6 19E+06	1.12E-05	1 81E-12	3 00E-05	3.18E-13	1 60E-04	1.16E-14	4 29E-05	3 15E+07	6.88E-08
PR144M	1 14E+02	11.5%	10%	32	6.19E+06	1.12E-05	1.81E-12	3 00E-05	2 28E-15	1.60E-04	4 20E-16	1 55E-06	3.15E+07	1 78E-11
AM243	4.87E+01	11 5%	10%	32	6 19E+06	1.12E-05	1 81E-12	3.00E-05	9.74E-16	1.60E-04	2.61E-15	9.66E-06	3.15E+07	4.74E-11
CM242	3 23E+01	11.5%	10%	32	6 19E+06	1.12E-05	1.81E-12	3 00E-05	6.46E-16	1 60E-04	1.48E-17	5.48E-08	3.15E+07	1.78E-13
CM243	3.63E+01	11 5%	10%	32	6.19E+06	1.12E-05	1.81E-12	3 00E-05	7.26E-16	1.60E-04	6 68E-15	2.47E-05	3.15E+07	9.04E-11
NP239	4 87E+01	11.5%	10%	32	6.19E+06	1.12E-05	1 81E-12	3 00E-05	9.74E-16	1.60E-04	8.73E-15	3 23E-05	3.15E+07	1.58E-10
NP237	3 88E-01	11 5%	10%	32	6 19E+06	1.12E-05	1 81E-12	3 00E-05	7.76E-18	1 60E-04	1 26E-15	4 66E-06	3 15E+07	1 82E-13
PU242	2 85E+00	11.5%	10%	32	6 19E+06	1.12E-05	1 81E-12	3.00E-05	5 70E-17	1 60E-04	1 03E-17	3.81E-08	3 15E+07	1.09E-14
AM242	8 72E+00	11.5%	10%	32	6.19E+06	1.12E-05	1.81E-12	3.00E-05	1.74E-16	1.60E-04	7.30E-16	2 70E-06	3.15E+07	2.37E-12
AM242M	8 76E+00	11 5%	10%	32	6 19E+06	1.12E-05	1 81E-12	3 00E-05	1.75E-16	1 60E-04	6 01E-17	2 22E-07	3 15E+07	1 96E-13
													Total	6 06E-04

MPC-32															
Off-Normal Conditions															
Effective Dose Equivalent From Submersion															
Nuclide	Inventory (Ci/Assy)	% available for release	% remain airborne	No Assy	MPC Vol (cm3)	L_{offnor} Rate at Upstream (cm3/s)	Fraction Released per sec	Release Fraction	Release Rate (Ci/sec)	X/Q (sec/m3)	DCF (Sv/Bq)	DCF (mRem/uCi)	Occ Time (sec)	DDE (mRem)	
Gases															
H 3	3 68E+02	11.5%	100%	32	6.19E+06	1.12E-05	1.81E-12	0.30	7 36E-10	1 60E-04	2.75E-18	1.02E-08	3.15E+07	3.77E-08	
I129	3 31E-02	11.5%	100%	32	6.19E+06	1.12E-05	1.81E-12	0.30	6 62E-14	1.60E-04	2.14E-16	7.92E-07	3.15E+07	2.64E-10	
KR 85	5 86E+03	11.5%	100%	32	6.19E+06	1.12E-05	1.81E-12	0 30	1.17E-08	1 60E-04	1.14E-16	4.22E-07	3.15E+07	2 49E-05	
Crud															
Co-60	2.18E+01	100.0%	100%	32	6.19E+06	1.12E-05	1 81E-12	0.15	1.89E-10	1 60E-04	1 24E-13	4 59E-04	3.15E+07	4.38E-04	
Volatiles															
SR 90	6 32E+04	11 5%	100%	32	6.19E+06	1.12E-05	1.81E-12	2 00E-04	8.42E-11	1.60E-04	6.44E-18	2.38E-08	3 15E+07	1.01E-08	
RU106	1.59E+04	11.5%	100%	32	6.19E+06	1.12E-05	1 81E-12	2.00E-04	2.12E-11	1.60E-04	0 00E+00	0 00E+00	3.15E+07	0 00E+00	
CS134	4 04E+04	11.5%	100%	32	6.19E+06	1.12E-05	1.81E-12	2.00E-04	5 38E-11	1 60E-04	7.37E-14	2.73E-04	3.15E+07	7 40E-05	
CS137	9 82E+04	11.5%	100%	32	6.19E+06	1.12E-05	1.81E-12	2 00E-04	1.31E-10	1.60E-04	6 68E-18	2.47E-08	3.15E+07	1.63E-08	
Fines															
PU241	8 53E+04	11 5%	10%	32	6.19E+06	1.12E-05	1 81E-12	3 00E-05	1.71E-12	1.60E-04	6 48E-20	2 40E-10	3 15E+07	2 06E-12	
Y 90	6.32E+04	11.5%	10%	32	6.19E+06	1.12E-05	1.81E-12	3 00E-05	1.26E-12	1 60E-04	1.77E-16	6 55E-07	3.15E+07	4.17E-09	
PM147	2 63E+04	11.5%	10%	32	6.19E+06	1.12E-05	1 81E-12	3.00E-05	5 26E-13	1 60E-04	5 45E-19	2 02E-09	3.15E+07	5 34E-12	
CE144	8.14E+03	11 5%	10%	32	6.19E+06	1.12E-05	1.81E-12	3 00E-05	1.63E-13	1.60E-04	7.69E-16	2 85E-06	3.15E+07	2 33E-09	
PR144	8.14E+03	11.5%	10%	32	6.19E+06	1.12E-05	1.81E-12	3 00E-05	1.63E-13	1.60E-04	1 90E-15	7.03E-06	3.15E+07	5 77E-09	
EU154	5 90E+03	11.5%	10%	32	6.19E+06	1.12E-05	1 81E-12	3 00E-05	1.18E-13	1 60E-04	5 99E-14	2 22E-04	3.15E+07	1.32E-07	
CM244	1.01E+04	11 5%	10%	32	6 19E+06	1.12E-05	1.81E-12	3 00E-05	2 02E-13	1.60E-04	7 08E-19	2 62E-09	3.15E+07	2.67E-12	
PU238	5 81E+03	11 5%	10%	32	6.19E+06	1.12E-05	1.81E-12	3 00E-05	1.16E-13	1.60E-04	1 06E-18	3 92E-09	3.15E+07	2 30E-12	
SB125	2.30E+03	11 5%	10%	32	6.19E+06	1.12E-05	1 81E-12	3 00E-05	4.60E-14	1.60E-04	1.95E-14	7.22E-05	3.15E+07	1.67E-08	
EU155	1 65E+03	11 5%	10%	32	6.19E+06	1.12E-05	1 81E-12	3 00E-05	3.30E-14	1.60E-04	2 22E-15	8.21E-06	3.15E+07	1.37E-09	
AM241	9 00E+02	11.5%	10%	32	6 19E+06	1.12E-05	1.81E-12	3 00E-05	1.80E-14	1 60E-04	6.74E-16	2 49E-06	3.15E+07	2.26E-10	
TE125M	5.61E+02	11.5%	10%	32	6.19E+06	1.12E-05	1 81E-12	3 00E-05	1.12E-14	1.60E-04	2 23E-16	8.25E-07	3.15E+07	4 66E-11	
PU240	4 05E+02	11.5%	10%	32	6 19E+06	1.12E-05	1.81E-12	3.00E-05	8.10E-15	1.60E-04	1.09E-18	4.03E-09	3.15E+07	1.65E-13	
SM151	3 38E+02	11 5%	10%	32	6.19E+06	1.12E-05	1.81E-12	3 00E-05	6.76E-15	1 60E-04	7 08E-21	2 62E-11	3.15E+07	8.92E-16	
PU239	2 04E+02	11 5%	10%	32	6.19E+06	1.12E-05	1 81E-12	3.00E-05	4 08E-15	1 60E-04	2 65E-18	9.81E-09	3.15E+07	2.02E-13	
BA137M	9 27E+04	11 5%	10%	32	6.19E+06	1.12E-05	1 81E-12	3 00E-05	1.85E-12	1 60E-04	2 80E-14	1.04E-04	3.15E+07	9.68E-07	
RH106	1.59E+04	11.5%	10%	32	6.19E+06	1.12E-05	1.81E-12	3 00E-05	3.18E-13	1 60E-04	1.01E-14	3.74E-05	3.15E+07	5 99E-08	
PR144M	1.14E+02	11.5%	10%	32	6.19E+06	1.12E-05	1.81E-12	3 00E-05	2.28E-15	1.60E-04	2.00E-16	7.40E-07	3.15E+07	8.50E-12	
AM243	4 87E+01	11 5%	10%	32	6.19E+06	1.12E-05	1.81E-12	3 00E-05	9.74E-16	1.60E-04	1.92E-15	7.10E-06	3.15E+07	3 49E-11	
CM242	3 23E+01	11.5%	10%	32	6.19E+06	1.12E-05	1.81E-12	3 00E-05	6.46E-16	1.60E-04	1.13E-18	4.18E-09	3.15E+07	1.36E-14	
CM243	3 63E+01	11 5%	10%	32	6.19E+06	1.12E-05	1.81E-12	3.00E-05	7 26E-16	1 60E-04	5.50E-15	2.04E-05	3 15E+07	7.44E-11	
NP239	4 87E+01	11.5%	10%	32	6.19E+06	1.12E-05	1 81E-12	3 00E-05	9.74E-16	1 60E-04	7.18E-15	2 66E-05	3.15E+07	1.30E-10	
NP237	3 88E-01	11 5%	10%	32	6 19E+06	1.12E-05	1 81E-12	3 00E-05	7.76E-18	1 60E-04	9 02E-16	3.34E-06	3.15E+07	1.30E-13	
PU242	2 85E+00	11.5%	10%	32	6.19E+06	1.12E-05	1 81E-12	3 00E-05	5 70E-17	1 60E-04	9.69E-19	3 59E-09	3.15E+07	1.03E-15	
AM242	8.72E+00	11 5%	10%	32	6.19E+06	1.12E-05	1.81E-12	3.00E-05	1.74E-16	1 60E-04	5.51E-16	2.04E-06	3.15E+07	1.79E-12	
AM242M	8 76E+00	11.5%	10%	32	6 19E+06	1.12E-05	1.81E-12	3 00E-05	1.75E-16	1.60E-04	1.72E-17	6 36E-08	3.15E+07	5.62E-14	
													Total	5 38E-04	

MPC-32															
Off-Normal Conditions															
Effective Dose Equivalent From Submersion															
Nuclide	Inventory (Ci/Assy)	% available for release	% remain airborne	No. Assy	MPC Vol (cm3)	L_{offnor} Rate at Upstream (cm3/s)	Fraction Released per sec	Release Fraction	Release Rate (Ci/sec)	X/Q (sec/m3)	DCF (Sv/Bq)	DCF (mRem/uCi)	Occ Time (sec)	DDE (mRem)	
Gases															
H 3	3 68E+02	11.5%	100%	32	6.19E+06	1.12E-05	1.81E-12	0.30	7.36E-10	1.60E-04	0 00E+00	0.00E+00	3.15E+07	0.00E+00	
I129	3 31E-02	11.5%	100%	32	6 19E+06	1.12E-05	1.81E-12	0.30	6 62E-14	1.60E-04	1.64E-16	6.07E-07	3.15E+07	2 02E-10	
KR 85	5 86E+03	11.5%	100%	32	6.19E+06	1.12E-05	1.81E-12	0 30	1.17E-08	1 60E-04	1.09E-16	4 03E-07	3.15E+07	2.38E-05	
Crud															
Co-60	2.18E+01	100 0%	100%	32	6.19E+06	1.12E-05	1.81E-12	0 15	1.89E-10	1 60E-04	1.23E-13	4 55E-04	3.15E+07	4 34E-04	
Volatiles															
SR 90	6.32E+04	11.5%	100%	32	6.19E+06	1.12E-05	1.81E-12	2 00E-04	8.42E-11	1 60E-04	5.44E-18	2.01E-08	3 15E+07	8 54E-09	
RU106	1.59E+04	11 5%	100%	32	6.19E+06	1.12E-05	1.81E-12	2 00E-04	2.12E-11	1 60E-04	0.00E+00	0 00E+00	3.15E+07	0 00E+00	
CS134	4.04E+04	11.5%	100%	32	6 19E+06	1.12E-05	1 81E-12	2 00E-04	5.38E-11	1 60E-04	7.19E-14	2 66E-04	3.15E+07	7.22E-05	
CS137	9 82E+04	11.5%	100%	32	6.19E+06	1.12E-05	1 81E-12	2.00E-04	1.31E-10	1.60E-04	5.70E-18	2.11E-08	3.15E+07	1.39E-08	
Fines															
PU241	8 53E+04	11.5%	10%	32	6.19E+06	1.12E-05	1 81E-12	3.00E-05	1 71E-12	1.60E-04	5.63E-20	2.08E-10	3.15E+07	1.79E-12	
Y 90	6 32E+04	11 5%	10%	32	6.19E+06	1.12E-05	1.81E-12	3 00E-05	1.26E-12	1.60E-04	1.62E-16	5 99E-07	3.15E+07	3.82E-09	
PM147	2.63E+04	11 5%	10%	32	6.19E+06	1.12E-05	1.81E-12	3.00E-05	5.26E-13	1.60E-04	4.46E-19	1.65E-09	3.15E+07	4.37E-12	
CE144	8.14E+03	11 5%	10%	32	6.19E+06	1.12E-05	1 81E-12	3.00E-05	1.63E-13	1.60E-04	6 68E-16	2.47E-06	3.15E+07	2 03E-09	
PR144	8 14E+03	11.5%	10%	32	6.19E+06	1.12E-05	1 81E-12	3 00E-05	1 63E-13	1.60E-04	1.87E-15	6 92E-06	3.15E+07	5 67E-09	
EU154	5 90E+03	11.5%	10%	32	6.19E+06	1.12E-05	1 81E-12	3.00E-05	1.18E-13	1.60E-04	5 87E-14	2.17E-04	3.15E+07	1 29E-07	
CM244	1.01E+04	11 5%	10%	32	6.19E+06	1.12E-05	1 81E-12	3.00E-05	2 02E-13	1.60E-04	1 46E-18	5.40E-09	3 15E+07	5 50E-12	
PU238	5 81E+03	11 5%	10%	32	6 19E+06	1.12E-05	1 81E-12	3 00E-05	1.16E-13	1 60E-04	1 68E-18	6 22E-09	3.15E+07	3 64E-12	
SB125	2 30E+03	11 5%	10%	32	6.19E+06	1.12E-05	1 81E-12	3 00E-05	4.60E-14	1.60E-04	1.87E-14	6.92E-05	3.15E+07	1.60E-08	
EU155	1 65E+03	11 5%	10%	32	6.19E+06	1.12E-05	1.81E-12	3 00E-05	3 30E-14	1.60E-04	1.85E-15	6 85E-06	3 15E+07	1.14E-09	
AM241	9 00E+02	11 5%	10%	32	6 19E+06	1.12E-05	1 81E-12	3.00E-05	1.80E-14	1.60E-04	5.21E-16	1 93E-06	3 15E+07	1.75E-10	
TE125M	5 61E+02	11 5%	10%	32	6.19E+06	1.12E-05	1 81E-12	3 00E-05	1.12E-14	1 60E-04	1.86E-16	6 88E-07	3.15E+07	3 89E-11	
PU240	4.05E+02	11.5%	10%	32	6.19E+06	1.12E-05	1.81E-12	3 00E-05	8.10E-15	1 60E-04	1.65E-18	6.11E-09	3 15E+07	2.49E-13	
SM151	3 38E+02	11.5%	10%	32	6.19E+06	1 12E-05	1.81E-12	3 00E-05	6.76E-15	1.60E-04	1.13E-20	4.18E-11	3 15E+07	1.42E-15	
PU239	2 04E+02	11.5%	10%	32	6.19E+06	1.12E-05	1.81E-12	3.00E-05	4 08E-15	1.60E-04	2.67E-18	9.88E-09	3 15E+07	2.03E-13	
BA137M	9 27E+04	11.5%	10%	32	6.19E+06	1.12E-05	1 81E-12	3 00E-05	1 85E-12	1.60E-04	2.73E-14	1.01E-04	3 15E+07	9.43E-07	
RH106	1 59E+04	11.5%	10%	32	6 19E+06	1.12E-05	1 81E-12	3.00E-05	3 18E-13	1 60E-04	9.75E-15	3 61E-05	3.15E+07	5.78E-08	
PR144M	1.14E+02	11.5%	10%	32	6.19E+06	1.12E-05	1 81E-12	3 00E-05	2.28E-15	1 60E-04	1.56E-16	5 77E-07	3 15E+07	6 63E-12	
AM243	4 87E+01	11 5%	10%	32	6 19E+06	1.12E-05	1 81E-12	3 00E-05	9.74E-16	1 60E-04	1.55E-15	5.74E-06	3 15E+07	2 81E-11	
CM242	3 23E+01	11 5%	10%	32	6 19E+06	1 12E-05	1 81E-12	3 00E-05	6.46E-16	1 60E-04	1.89E-18	6 99E-09	3 15E+07	2.28E-14	
CM243	3 63E+01	11.5%	10%	32	6 19E+06	1.12E-05	1 81E-12	3 00E-05	7.26E-16	1 60E-04	5 00E-15	1 85E-05	3.15E+07	6.77E-11	
NP239	4 87E+01	11 5%	10%	32	6.19E+06	1.12E-05	1.81E-12	3 00E-05	9 74E-16	1.60E-04	6 50E-15	2.41E-05	3 15E+07	1 18E-10	
NP237	3 88E-01	11 5%	10%	32	6.19E+06	1 12E-05	1 81E-12	3 00E-05	7 76E-18	1 60E-04	7 69E-16	2 85E-06	3 15E+07	1.11E-13	
PU242	2 85E+00	11.5%	10%	32	6.19E+06	1.12E-05	1 81E-12	3 00E-05	5 70E-17	1 60E-04	1.43E-18	5 29E-09	3.15E+07	1.52E-15	
AM242	8 72E+00	11.5%	10%	32	6 19E+06	1.12E-05	1 81E-12	3 00E-05	1 74E-16	1 60E-04	4.77E-16	1.76E-06	3 15E+07	1 55E-12	
AM242M	8 76E+00	11.5%	10%	32	6 19E+06	1 12E-05	1 81E-12	3.00E-05	1.75E-16	1 60E-04	1.72E-17	6 36E-08	3.15E+07	5.62E-14	
													Total	5.31E-04	

MPC-32															
Off-Normal Conditions															
Effective Dose Equivalent From Submersion															
Nuclide	Inventory (Ci/Assy)	% available for release	% remain airborne	No Assy	MPC Vol (cm3)	L_{offnor} Rate at Upstream (cm3/s)	Fraction Released per sec	Release Fraction	Release Rate (Ci/sec)	X/Q (sec/m3)	DCF (Sv/Bq)	DCF (mRem/uCi)	Occ Time (sec)	DDE (mRem)	
Gases															
H 3	3 68E+02	11 5%	100%	32	6.19E+06	1.12E-05	1.81E-12	0 30	7.36E-10	1.60E-04	0 00E+00	0 00E+00	3 15E+07	0 00E+00	
I129	3 31E-02	11.5%	100%	32	6.19E+06	1.12E-05	1 81E-12	0.30	6 62E-14	1.60E-04	1.10E-15	4 07E-06	3.15E+07	1.36E-09	
KR 85	5 86E+03	11 5%	100%	32	6 19E+06	1.12E-05	1.81E-12	0 30	1.17E-08	1 60E-04	2 20E-16	8 14E-07	3.15E+07	4 81E-05	
Crud															
Co-60	2.18E+01	100 0%	100%	32	6.19E+06	1.12E-05	1 81E-12	0 15	1 89E-10	1.60E-04	1.78E-13	6 59E-04	3.15E+07	6 28E-04	
Volatiles															
SR 90	6 32E+04	11 5%	100%	32	6.19E+06	1.12E-05	1.81E-12	2.00E-04	8 42E-11	1 60E-04	2.28E-17	8 44E-08	3.15E+07	3 58E-08	
RU106	1.59E+04	11 5%	100%	32	6.19E+06	1.12E-05	1 81E-12	2 00E-04	2.12E-11	1.60E-04	0 00E+00	0 00E+00	3.15E+07	0.00E+00	
CS134	4 04E+04	11.5%	100%	32	6.19E+06	1.12E-05	1.81E-12	2 00E-04	5.38E-11	1 60E-04	1.20E-13	4 44E-04	3 15E+07	1.20E-04	
CS137	9 82E+04	11 5%	100%	32	6.19E+06	1.12E-05	1 81E-12	2 00E-04	1.31E-10	1 60E-04	2.29E-17	8 47E-08	3.15E+07	5 59E-08	
Fines															
PU241	8.53E+04	11.5%	10%	32	6.19E+06	1.12E-05	1.81E-12	3 00E-05	1 71E-12	1 60E-04	2.19E-19	8.10E-10	3.15E+07	6.96E-12	
Y 90	6 32E+04	11 5%	10%	32	6.19E+06	1.12E-05	1.81E-12	3 00E-05	1.26E-12	1.60E-04	4 44E-16	1 64E-06	3.15E+07	1.05E-08	
PM147	2 63E+04	11.5%	10%	32	6.19E+06	1.12E-05	1 81E-12	3 00E-05	5.26E-13	1.60E-04	2.18E-18	8 07E-09	3.15E+07	2.14E-11	
CE144	8.14E+03	11.5%	10%	32	6.19E+06	1.12E-05	1.81E-12	3.00E-05	1.63E-13	1 60E-04	2 49E-15	9 21E-06	3.15E+07	7.56E-09	
PR144	8 14E+03	11.5%	10%	32	6.19E+06	1.12E-05	1 81E-12	3 00E-05	1.63E-13	1 60E-04	2 99E-15	1.11E-05	3.15E+07	9 07E-09	
EU154	5.90E+03	11.5%	10%	32	6.19E+06	1 12E-05	1.81E-12	3 00E-05	1.18E-13	1 60E-04	9.43E-14	3.49E-04	3.15E+07	2.07E-07	
CM244	1 01E+04	11.5%	10%	32	6.19E+06	1.12E-05	1.81E-12	3.00E-05	2 02E-13	1 60E-04	8 82E-18	3.26E-08	3.15E+07	3 32E-11	
PU238	5 81E+03	11 5%	10%	32	6.19E+06	1.12E-05	1.81E-12	3 00E-05	1.16E-13	1.60E-04	9 30E-18	3 44E-08	3.15E+07	2.01E-11	
SB125	2.30E+03	11 5%	10%	32	6 19E+06	1.12E-05	1.81E-12	3 00E-05	4 60E-14	1.60E-04	3.53E-14	1.31E-04	3.15E+07	3 03E-08	
EU155	1.65E+03	11.5%	10%	32	6.19E+06	1.12E-05	1.81E-12	3 00E-05	3 30E-14	1.60E-04	8.09E-15	2.99E-05	3.15E+07	4.98E-09	
AM241	9 00E+02	11.5%	10%	32	6.19E+06	1.12E-05	1 81E-12	3.00E-05	1.80E-14	1.60E-04	2.87E-15	1.06E-05	3.15E+07	9 63E-10	
TE125M	5.61E+02	11 5%	10%	32	6.19E+06	1.12E-05	1.81E-12	3 00E-05	1.12E-14	1.60E-04	1.22E-15	4.51E-06	3.15E+07	2.55E-10	
PU240	4 05E+02	11 5%	10%	32	6.19E+06	1.12E-05	1 81E-12	3 00E-05	8.10E-15	1.60E-04	9.26E-18	3.43E-08	3.15E+07	1.40E-12	
SM151	3.38E+02	11 5%	10%	32	6.19E+06	1.12E-05	1.81E-12	3.00E-05	6.76E-15	1.60E-04	7.09E-20	2 62E-10	3.15E+07	8 93E-15	
PU239	2 04E+02	11.5%	10%	32	6.19E+06	1.12E-05	1.81E-12	3.00E-05	4.08E-15	1 60E-04	9 47E-18	3.50E-08	3.15E+07	7.20E-13	
BA137M	9 27E+04	11 5%	10%	32	6.19E+06	1.12E-05	1.81E-12	3.00E-05	1.85E-12	1.60E-04	4 63E-14	1.71E-04	3.15E+07	1 60E-06	
RH106	1 59E+04	11.5%	10%	32	6.19E+06	1.12E-05	1.81E-12	3 00E-05	3.18E-13	1.60E-04	1.72E-14	6.36E-05	3.15E+07	1.02E-07	
PR144M	1.14E+02	11 5%	10%	32	6.19E+06	1.12E-05	1 81E-12	3 00E-05	2.28E-15	1 60E-04	8.16E-16	3 02E-06	3 15E+07	3 47E-11	
AM243	4.87E+01	11.5%	10%	32	6 19E+06	1.12E-05	1.81E-12	3.00E-05	9.74E-16	1 60E-04	7.47E-15	2.76E-05	3.15E+07	1.36E-10	
CM242	3.23E+01	11.5%	10%	32	6.19E+06	1.12E-05	1.81E-12	3.00E-05	6 46E-16	1.60E-04	1.06E-17	3.92E-08	3.15E+07	1.28E-13	
CM243	3.63E+01	11.5%	10%	32	6.19E+06	1.12E-05	1 81E-12	3 00E-05	7.26E-16	1.60E-04	1 50E-14	5 55E-05	3 15E+07	2.03E-10	
NP239	4 87E+01	11 5%	10%	32	6.19E+06	1.12E-05	1 81E-12	3 00E-05	9.74E-16	1.60E-04	2.00E-14	7 40E-05	3.15E+07	3 63E-10	
NP237	3 88E-01	11 5%	10%	32	6.19E+06	1.12E-05	1 81E-12	3 00E-05	7.76E-18	1 60E-04	3.20E-15	1.18E-05	3.15E+07	4.63E-13	
PU242	2 85E+00	11.5%	10%	32	6.19E+06	1.12E-05	1.81E-12	3.00E-05	5.70E-17	1 60E-04	7.90E-18	2.92E-08	3.15E+07	8.39E-15	
AM242	8 72E+00	11 5%	10%	32	6.19E+06	1.12E-05	1 81E-12	3 00E-05	1.74E-16	1.60E-04	1 88E-15	6.96E-06	3.15E+07	6.11E-12	
AM242M	8.76E+00	11 5%	10%	32	6.19E+06	1.12E-05	1.81E-12	3 00E-05	1.75E-16	1.60E-04	7.94E-17	2.94E-07	3.15E+07	2 59E-13	
													Total	7.99E-04	

MPC-32														
Off-Normal Conditions														
Effective Dose Equivalent From Submersion														
Nuclide	Inventory (Ci/Assy)	% available for release	% remain airborne	No. Assy	MPC Vol (cm3)	L_{offnor} Rate at Upstream (cm3/s)	Fraction Released per sec	Release Fraction	Release Rate (Ci/sec)	X/Q (sec/m3)	DCF (Sv/Bq)	DCF (mRem/uCi)	Occ Time (sec)	DDE (mRem)
Gases														
H 3	3 68E+02	11 5%	100%	32	6 19E+06	1.12E-05	1.81E-12	0.30	7.36E-10	1.60E-04	0.00E+00	0 00E+00	3.15E+07	0 00E+00
I129	3.31E-02	11.5%	100%	32	6.19E+06	1.12E-05	1.81E-12	0.30	6 62E-14	1.60E-04	3 86E-16	1.43E-06	3.15E+07	4.76E-10
KR 85	5 86E+03	11.5%	100%	32	6 19E+06	1.12E-05	1.81E-12	0 30	1.17E-08	1 60E-04	1.18E-16	4.37E-07	3.15E+07	2.58E-05
Crud														
Co-60	2.18E+01	100 0%	100%	32	6 19E+06	1.12E-05	1.81E-12	0.15	1 89E-10	1.60E-04	1 27E-13	4.70E-04	3.15E+07	4.48E-04
Volatiles														
SR 90	6.32E+04	11.5%	100%	32	6.19E+06	1.12E-05	1.81E-12	2.00E-04	8.42E-11	1.60E-04	7.33E-18	2.71E-08	3.15E+07	1.15E-08
RU106	1 59E+04	11.5%	100%	32	6.19E+06	1.12E-05	1.81E-12	2.00E-04	2.12E-11	1 60E-04	0 00E+00	0 00E+00	3 15E+07	0.00E+00
CS134	4.04E+04	11 5%	100%	32	6.19E+06	1.12E-05	1.81E-12	2.00E-04	5 38E-11	1.60E-04	7.57E-14	2.80E-04	3.15E+07	7.60E-05
CS137	9 82E+04	11 5%	100%	32	6.19E+06	1.12E-05	1.81E-12	2 00E-04	1.31E-10	1 60E-04	7 55E-18	2.79E-08	3 15E+07	1.84E-08
Fines														
PU241	8 53E+04	11 5%	10%	32	6 19E+06	1.12E-05	1 81E-12	3.00E-05	1.71E-12	1 60E-04	6 98E-20	2 58E-10	3 15E+07	2 22E-12
Y 90	6.32E+04	11 5%	10%	32	6.19E+06	1.12E-05	1.81E-12	3.00E-05	1 26E-12	1.60E-04	1 87E-16	6.92E-07	3 15E+07	4 41E-09
PM147	2 63E+04	11 5%	10%	32	6.19E+06	1.12E-05	1.81E-12	3 00E-05	5.26E-13	1 60E-04	6.75E-19	2.50E-09	3.15E+07	6.62E-12
CE144	8 14E+03	11 5%	10%	32	6.19E+06	1.12E-05	1 81E-12	3 00E-05	1.63E-13	1 60E-04	8.33E-16	3 08E-06	3.15E+07	2 53E-09
PR144	8 14E+03	11.5%	10%	32	6.19E+06	1.12E-05	1 81E-12	3 00E-05	1 63E-13	1 60E-04	1.95E-15	7 22E-06	3.15E+07	5.92E-09
EU154	5 90E+03	11.5%	10%	32	6 19E+06	1.12E-05	1.81E-12	3 00E-05	1.18E-13	1 60E-04	6.15E-14	2 28E-04	3 15E+07	1.35E-07
CM244	1 01E+04	11 5%	10%	32	6.19E+06	1.12E-05	1.81E-12	3.00E-05	2 02E-13	1.60E-04	4 19E-18	1.55E-08	3.15E+07	1 58E-11
PU238	5 81E+03	11 5%	10%	32	6.19E+06	1.12E-05	1.81E-12	3 00E-05	1.16E-13	1 60E-04	4.01E-18	1 48E-08	3.15E+07	8 68E-12
SB125	2 30E+03	11.5%	10%	32	6.19E+06	1.12E-05	1 81E-12	3.00E-05	4 60E-14	1.60E-04	2 01E-14	7.44E-05	3 15E+07	1.72E-08
EU155	1 65E+03	11 5%	10%	32	6.19E+06	1.12E-05	1.81E-12	3.00E-05	3.30E-14	1 60E-04	2 41E-15	8 92E-06	3 15E+07	1 48E-09
AM241	9 00E+02	11.5%	10%	32	6.19E+06	1 12E-05	1.81E-12	3 00E-05	1.80E-14	1 60E-04	7.83E-16	2 90E-06	3 15E+07	2 63E-10
TE125M	5 61E+02	11.5%	10%	32	6.19E+06	1.12E-05	1 81E-12	3 00E-05	1.12E-14	1 60E-04	4.64E-16	1.72E-06	3.15E+07	9.70E-11
PU240	4 05E+02	11 5%	10%	32	6 19E+06	1.12E-05	1 81E-12	3.00E-05	8 10E-15	1 60E-04	3 92E-18	1.45E-08	3 15E+07	5.92E-13
SM151	3 38E+02	11 5%	10%	32	6.19E+06	1.12E-05	1 81E-12	3 00E-05	6 76E-15	1.60E-04	3.58E-20	1.32E-10	3 15E+07	4.51E-15
PU239	2 04E+02	11.5%	10%	32	6.19E+06	1.12E-05	1 81E-12	3 00E-05	4.08E-15	1 60E-04	3 88E-18	1.44E-08	3 15E+07	2.95E-13
BA137M	9 27E+04	11.5%	10%	32	6.19E+06	1.12E-05	1.81E-12	3 00E-05	1 85E-12	1.60E-04	2.88E-14	1.07E-04	3.15E+07	9 95E-07
RH106	1.59E+04	11.5%	10%	32	6.19E+06	1.12E-05	1 81E-12	3.00E-05	3.18E-13	1 60E-04	1.03E-14	3 81E-05	3 15E+07	6.10E-08
PR144M	1 14E+02	11.5%	10%	32	6.19E+06	1.12E-05	1.81E-12	3 00E-05	2.28E-15	1.60E-04	2.81E-16	1.04E-06	3.15E+07	1.19E-11
AM243	4 87E+01	11.5%	10%	32	6 19E+06	1 12E-05	1.81E-12	3 00E-05	9.74E-16	1.60E-04	2.09E-15	7 73E-06	3.15E+07	3.79E-11
CM242	3 23E+01	11 5%	10%	32	6.19E+06	1.12E-05	1.81E-12	3 00E-05	6 46E-16	1 60E-04	4.91E-18	1 82E-08	3 15E+07	5 91E-14
CM243	3 63E+01	11 5%	10%	32	6 19E+06	1.12E-05	1 81E-12	3 00E-05	7.26E-16	1 60E-04	5.76E-15	2 13E-05	3.15E+07	7 79E-11
NP239	4 87E+01	11 5%	10%	32	6.19E+06	1.12E-05	1.81E-12	3 00E-05	9.74E-16	1 60E-04	7.52E-15	2 78E-05	3.15E+07	1 37E-10
NP237	3 88E-01	11 5%	10%	32	6 19E+06	1.12E-05	1 81E-12	3 00E-05	7.76E-18	1 60E-04	9.94E-16	3 68E-06	3.15E+07	1 44E-13
PU242	2 85E+00	11.5%	10%	32	6.19E+06	1.12E-05	1.81E-12	3.00E-05	5 70E-17	1.60E-04	3 32E-18	1 23E-08	3.15E+07	3 53E-15
AM242	8.72E+00	11.5%	10%	32	6.19E+06	1.12E-05	1.81E-12	3 00E-05	1.74E-16	1 60E-04	5 94E-16	2.20E-06	3 15E+07	1.93E-12
AM242M	8 76E+00	11.5%	10%	32	6.19E+06	1.12E-05	1 81E-12	3.00E-05	1.75E-16	1.60E-04	2 95E-17	1 09E-07	3.15E+07	9 63E-14
													Total	5.51E-04

MPC-32															
Off-Normal Conditions															
Effective Dose Equivalent From Submersion															
Nuclide	Inventory (Ci/Assy)	% available for release	% remain airborne	No. Assy	MPC Vol (cm3)	L_{offnor} Rate at Upstream (cm3/s)	Fraction Released per sec	Release Fraction	Release Rate (Ci/sec)	X/Q (sec/m3)	DCF (Sv/Bq)	DCF (mRem/uCi)	Occ Time (sec)	DDE (mRem)	
Gases															
H 3	3 68E+02	11.5%	100%	32	6.19E+06	1.12E-05	1.81E-12	0.30	7.36E-10	1.60E-04	3.31E-19	1.22E-09	3 15E+07	4.54E-09	
I129	3 31E-02	11 5%	100%	32	6.19E+06	1.12E-05	1.81E-12	0.30	6 62E-14	1.60E-04	3.80E-16	1.41E-06	3.15E+07	4 69E-10	
KR 85	5 86E+03	11.5%	100%	32	6 19E+06	1.12E-05	1.81E-12	0.30	1.17E-08	1.60E-04	1.19E-16	4.40E-07	3 15E+07	2 60E-05	
Crud															
Co-60	2.18E+01	100.0%	100%	32	6.19E+06	1.12E-05	1 81E-12	0.15	1 89E-10	1.60E-04	1.26E-13	4 66E-04	3.15E+07	4.45E-04	
Volatiles															
SR 90	6.32E+04	11.5%	100%	32	6.19E+06	1.12E-05	1.81E-12	2.00E-04	8.42E-11	1.60E-04	7.53E-18	2.79E-08	3.15E+07	1.18E-08	
RU106	1.59E+04	11.5%	100%	32	6.19E+06	1.12E-05	1.81E-12	2.00E-04	2.12E-11	1.60E-04	0 00E+00	0 00E+00	3.15E+07	0.00E+00	
CS134	4.04E+04	11.5%	100%	32	6.19E+06	1.12E-05	1.81E-12	2 00E-04	5.38E-11	1.60E-04	7.57E-14	2 80E-04	3 15E+07	7.60E-05	
CS137	9 82E+04	11.5%	100%	32	6.19E+06	1.12E-05	1.81E-12	2.00E-04	1.31E-10	1.60E-04	7.74E-18	2 86E-08	3 15E+07	1.89E-08	
Fines															
PU241	8 53E+04	11.5%	10%	32	6 19E+06	1.12E-05	1 81E-12	3 00E-05	1.71E-12	1.60E-04	7.25E-20	2.68E-10	3 15E+07	2.31E-12	
Y 90	6.32E+04	11.5%	10%	32	6.19E+06	1.12E-05	1.81E-12	3 00E-05	1 26E-12	1 60E-04	1 90E-16	7.03E-07	3.15E+07	4.48E-09	
PM147	2 63E+04	11.5%	10%	32	6.19E+06	1.12E-05	1.81E-12	3 00E-05	5 26E-13	1.60E-04	6.93E-19	2.56E-09	3.15E+07	6.79E-12	
CE144	8.14E+03	11.5%	10%	32	6.19E+06	1.12E-05	1.81E-12	3 00E-05	1 63E-13	1 60E-04	8 53E-16	3.16E-06	3.15E+07	2.59E-09	
PR144	8.14E+03	11.5%	10%	32	6.19E+06	1.12E-05	1.81E-12	3 00E-05	1 63E-13	1.60E-04	1.95E-15	7.22E-06	3.15E+07	5.92E-09	
EU154	5 90E+03	11 5%	10%	32	6.19E+06	1.12E-05	1.81E-12	3 00E-05	1.18E-13	1 60E-04	6.14E-14	2.27E-04	3.15E+07	1 35E-07	
CM244	1.01E+04	11.5%	10%	32	6.19E+06	1.12E-05	1.81E-12	3 00E-05	2 02E-13	1 60E-04	4.91E-18	1.82E-08	3.15E+07	1.85E-11	
PU238	5 81E+03	11.5%	10%	32	6.19E+06	1.12E-05	1.81E-12	3.00E-05	1.16E-13	1.60E-04	4 88E-18	1.81E-08	3.15E+07	1.06E-11	
SB125	2.30E+03	11.5%	10%	32	6.19E+06	1.12E-05	1.81E-12	3 00E-05	4 60E-14	1 60E-04	2 02E-14	7 47E-05	3.15E+07	1.73E-08	
EU155	1 65E+03	11.5%	10%	32	6.19E+06	1.12E-05	1.81E-12	3.00E-05	3 30E-14	1.60E-04	2.49E-15	9.21E-06	3.15E+07	1.53E-09	
AM241	9 00E+02	11.5%	10%	32	6.19E+06	1.12E-05	1.81E-12	3 00E-05	1 80E-14	1.60E-04	8.18E-16	3 03E-06	3 15E+07	2.74E-10	
TE125M	5 61E+02	11 5%	10%	32	6.19E+06	1.12E-05	1.81E-12	3.00E-05	1.12E-14	1.60E-04	4.53E-16	1.68E-06	3.15E+07	9 47E-11	
PU240	4.05E+02	11.5%	10%	32	6.19E+06	1.12E-05	1.81E-12	3 00E-05	8.10E-15	1.60E-04	4.75E-18	1.76E-08	3.15E+07	7.17E-13	
SM151	3 38E+02	11.5%	10%	32	6.19E+06	1.12E-05	1.81E-12	3 00E-05	6.76E-15	1.60E-04	3 61E-20	1 34E-10	3 15E+07	4.55E-15	
PU239	2 04E+02	11.5%	10%	32	6.19E+06	1.12E-05	1.81E-12	3.00E-05	4.08E-15	1.60E-04	4.24E-18	1.57E-08	3.15E+07	3.22E-13	
BA137M	9.27E+04	11.5%	10%	32	6.19E+06	1.12E-05	1 81E-12	3 00E-05	1 85E-12	1.60E-04	2.88E-14	1.07E-04	3.15E+07	9.95E-07	
RH106	1.59E+04	11.5%	10%	32	6.19E+06	1.12E-05	1.81E-12	3.00E-05	3.18E-13	1.60E-04	1.04E-14	3 85E-05	3 15E+07	6.16E-08	
PR144M	1.14E+02	11 5%	10%	32	6.19E+06	1.12E-05	1.81E-12	3 00E-05	2.28E-15	1.60E-04	2.79E-16	1 03E-06	3.15E+07	1.19E-11	
AM243	4 87E+01	11.5%	10%	32	6.19E+06	1.12E-05	1.81E-12	3.00E-05	9.74E-16	1 60E-04	2.18E-15	8 07E-06	3.15E+07	3.96E-11	
CM242	3 23E+01	11.5%	10%	32	6.19E+06	1.12E-05	1 81E-12	3.00E-05	6 46E-16	1 60E-04	5 69E-18	2.11E-08	3.15E+07	6 85E-14	
CM243	3 63E+01	11 5%	10%	32	6.19E+06	1.12E-05	1.81E-12	3 00E-05	7.26E-16	1.60E-04	5 88E-15	2.18E-05	3.15E+07	7.96E-11	
NP239	4 87E+01	11 5%	10%	32	6.19E+06	1.12E-05	1.81E-12	3.00E-05	9.74E-16	1.60E-04	7.69E-15	2 85E-05	3.15E+07	1 40E-10	
NP237	3.88E-01	11 5%	10%	32	6.19E+06	1.12E-05	1 81E-12	3 00E-05	7.76E-18	1.60E-04	1.03E-15	3 81E-06	3.15E+07	1.49E-13	
PU242	2 85E+00	11.5%	10%	32	6.19E+06	1.12E-05	1.81E-12	3 00E-05	5 70E-17	1 60E-04	4.01E-18	1 48E-08	3.15E+07	4.26E-15	
AM242	8.72E+00	11.5%	10%	32	6.19E+06	1.12E-05	1.81E-12	3.00E-05	1.74E-16	1 60E-04	6.15E-16	2.28E-06	3.15E+07	2.00E-12	
AM242M	8 76E+00	11 5%	10%	32	6.19E+06	1.12E-05	1.81E-12	3.00E-05	1.75E-16	1 60E-04	3 17E-17	1.17E-07	3 15E+07	1 04E-13	
													Total	5 48E-04	

MPC-32														
Off-Normal Conditions														
Effective Dose Equivalent From Submersion														
Nuclide	Inventory (Ci/Assy)	% available for release	% remain airborne	No. Assy	MPC Vol (cm3)	L_{offnor} Rate at Upstream (cm3/s)	Fraction Released per sec	Release Fraction	Release Rate (Ci/sec)	X/Q (sec/m3)	DCF (Sv/Bq)	DCF (mRem/uCi)	Occ Time (sec)	SDE (mRem)
Gases														
H 3	3 68E+02	11.5%	100%	32	6.19E+06	1.12E-05	1.81E-12	0 30	7.36E-10	1.60E-04	0 00E+00	0 00E+00	3 15E+07	0.00E+00
I129	3 31E-02	11.5%	100%	32	6.19E+06	1.12E-05	1.81E-12	0.30	6.62E-14	1 60E-04	1.10E-15	4 07E-06	3.15E+07	1 36E-09
KR 85	5 86E+03	11 5%	100%	32	6 19E+06	1.12E-05	1 81E-12	0.30	1.17E-08	1.60E-04	1.32E-14	4 88E-05	3.15E+07	2.88E-03
Crud														
Co-60	2 18E+01	100 0%	100%	32	6.19E+06	1.12E-05	1 81E-12	0 15	1.89E-10	1 60E-04	1.45E-13	5 37E-04	3.15E+07	5 12E-04
Volatiles														
SR 90	6 32E+04	11 5%	100%	32	6.19E+06	1.12E-05	1 81E-12	2.00E-04	8 42E-11	1.60E-04	9 20E-15	3.40E-05	3.15E+07	1.44E-05
RU106	1 59E+04	11 5%	100%	32	6.19E+06	1.12E-05	1 81E-12	2.00E-04	2.12E-11	1 60E-04	0 00E+00	0 00E+00	3.15E+07	0.00E+00
CS134	4 04E+04	11.5%	100%	32	6.19E+06	1.12E-05	1.81E-12	2 00E-04	5.38E-11	1.60E-04	9.45E-14	3 50E-04	3.15E+07	9 49E-05
CS137	9 82E+04	11 5%	100%	32	6.19E+06	1.12E-05	1.81E-12	2 00E-04	1.31E-10	1.60E-04	8 63E-15	3.19E-05	3.15E+07	2.11E-05
Fines														
PU241	8 53E+04	11 5%	10%	32	6 19E+06	1.12E-05	1.81E-12	3.00E-05	1.71E-12	1.60E-04	1.17E-19	4.33E-10	3.15E+07	3.72E-12
Y 90	6.32E+04	11 5%	10%	32	6 19E+06	1.12E-05	1.81E-12	3 00E-05	1.26E-12	1 60E-04	6 24E-14	2 31E-04	3.15E+07	1.47E-06
PM147	2 63E+04	11 5%	10%	32	6.19E+06	1.12E-05	1.81E-12	3 00E-05	5.26E-13	1 60E-04	8.11E-16	3 00E-06	3.15E+07	7.95E-09
CE144	8 14E+03	11.5%	10%	32	6.19E+06	1 12E-05	1 81E-12	3.00E-05	1 63E-13	1.60E-04	2 93E-15	1 08E-05	3.15E+07	8 89E-09
PR144	8 14E+03	11.5%	10%	32	6 19E+06	1.12E-05	1.81E-12	3 00E-05	1.63E-13	1 60E-04	8.43E-14	3 12E-04	3.15E+07	2.56E-07
EU154	5 90E+03	11 5%	10%	32	6.19E+06	1.12E-05	1.81E-12	3 00E-05	1.18E-13	1 60E-04	8 29E-14	3 07E-04	3.15E+07	1.82E-07
CM244	1 01E+04	11.5%	10%	32	6.19E+06	1.12E-05	1 81E-12	3.00E-05	2.02E-13	1.60E-04	3.91E-17	1.45E-07	3 15E+07	1.47E-10
PU238	5 81E+03	11.5%	10%	32	6.19E+06	1.12E-05	1 81E-12	3.00E-05	1.16E-13	1.60E-04	4.09E-17	1.51E-07	3.15E+07	8 86E-11
SB125	2 30E+03	11.5%	10%	32	6 19E+06	1.12E-05	1 81E-12	3 00E-05	4.60E-14	1 60E-04	2.65E-14	9 81E-05	3 15E+07	2 27E-08
EU155	1.65E+03	11 5%	10%	32	6.19E+06	1.12E-05	1.81E-12	3.00E-05	3.30E-14	1.60E-04	3.39E-15	1.25E-05	3.15E+07	2.09E-09
AM241	9 00E+02	11.5%	10%	32	6 19E+06	1.12E-05	1.81E-12	3 00E-05	1 80E-14	1.60E-04	1 28E-15	4.74E-06	3.15E+07	4 29E-10
TE125M	5 61E+02	11 5%	10%	32	6.19E+06	1.12E-05	1.81E-12	3.00E-05	1.12E-14	1 60E-04	1.94E-15	7.18E-06	3 15E+07	4.06E-10
PU240	4 05E+02	11 5%	10%	32	6 19E+06	1.12E-05	1 81E-12	3 00E-05	8 10E-15	1 60E-04	3 92E-17	1 45E-07	3.15E+07	5 92E-12
SM151	3 38E+02	11.5%	10%	32	6.19E+06	1.12E-05	1 81E-12	3 00E-05	6.76E-15	1 60E-04	1.90E-19	7 03E-10	3.15E+07	2.39E-14
PU239	2 04E+02	11 5%	10%	32	6.19E+06	1.12E-05	1 81E-12	3 00E-05	4 08E-15	1.60E-04	1.86E-17	6 88E-08	3.15E+07	1 41E-12
BA137M	9 27E+04	11 5%	10%	32	6.19E+06	1 12E-05	1 81E-12	3.00E-05	1 85E-12	1 60E-04	3.73E-14	1.38E-04	3.15E+07	1.29E-06
RH106	1 59E+04	11.5%	10%	32	6.19E+06	1.12E-05	1 81E-12	3 00E-05	3.18E-13	1.60E-04	1.09E-13	4.03E-04	3 15E+07	6.46E-07
PR144M	1 14E+02	11 5%	10%	32	6 19E+06	1.12E-05	1 81E-12	3.00E-05	2 28E-15	1 60E-04	5.08E-16	1 88E-06	3.15E+07	2.16E-11
AM243	4 87E+01	11 5%	10%	32	6.19E+06	1.12E-05	1.81E-12	3 00E-05	9.74E-16	1.60E-04	2.75E-15	1.02E-05	3.15E+07	4 99E-11
CM242	3 23E+01	11 5%	10%	32	6.19E+06	1.12E-05	1 81E-12	3.00E-05	6.46E-16	1 60E-04	4.29E-17	1 59E-07	3.15E+07	5.17E-13
CM243	3 63E+01	11.5%	10%	32	6 19E+06	1.12E-05	1 81E-12	3.00E-05	7 26E-16	1 60E-04	9.79E-15	3 62E-05	3.15E+07	1 32E-10
NP239	4.87E+01	11 5%	10%	32	6.19E+06	1.12E-05	1 81E-12	3 00E-05	9.74E-16	1.60E-04	1 60E-14	5 92E-05	3 15E+07	2 90E-10
NP237	3 88E-01	11.5%	10%	32	6 19E+06	1 12E-05	1.81E-12	3.00E-05	7.76E-18	1 60E-04	1.54E-15	5.70E-06	3.15E+07	2.23E-13
PU242	2 85E+00	11 5%	10%	32	6.19E+06	1.12E-05	1.81E-12	3 00E-05	5.70E-17	1 60E-04	3 27E-17	1 21E-07	3.15E+07	3 47E-14
AM242	8 72E+00	11.5%	10%	32	6.19E+06	1.12E-05	1.81E-12	3 00E-05	1.74E-16	1.60E-04	8.20E-15	3 03E-05	3.15E+07	2 67E-11
AM242M	8 76E+00	11 5%	10%	32	6.19E+06	1.12E-05	1.81E-12	3 00E-05	1.75E-16	1.60E-04	1.36E-16	5 03E-07	3.15E+07	4 44E-13
													Total	3 53E-03

MPC-32													
Accident Conditions													
Effective Dose Equivalent From Submersion													
Nuclide	Inventory (Ci/Assy)	% remain airborne	No. Assy	MPC Vol (cm3)	Lacc Rate at Upstream (cm3/s)	Fraction Released per sec	Release Fraction	Release Rate (Ci/sec)	X/Q (sec/m3)	DCF (Sv/Bq)	DCF (mRem/uCi)	Occ Time (sec)	DDE (mRem)
Gases													
H 3	3 68E+02	1.00E+00	32	6.19E+06	1.95E-05	3.16E-12	0.30	1.12E-08	8 00E-03	0.00E+00	0.00E+00	2.59E+06	0.00E+00
I129	3 31E-02	1.00E+00	32	6.19E+06	1.95E-05	3.16E-12	0.30	1.00E-12	8 00E-03	4.83E-16	1.79E-06	2.59E+06	3.72E-08
KR 85	5 86E+03	1.00E+00	32	6.19E+06	1.95E-05	3.16E-12	0 30	1.78E-07	8.00E-03	1.17E-16	4.33E-07	2.59E+06	1.59E-03
Crud													
Co-60	2.18E+01	1 00E+00	32	6.19E+06	1.95E-05	3.16E-12	1 00	2.20E-09	8.00E-03	1.23E-13	4.55E-04	2.59E+06	2.07E-02
Volatiles													
SR 90	6 32E+04	1 00E+00	32	6.19E+06	1.95E-05	3 16E-12	2.00E-04	1.28E-09	8.00E-03	7.78E-18	2.88E-08	2.59E+06	7.62E-07
RU106	1 59E+04	1 00E+00	32	6 19E+06	1.95E-05	3.16E-12	2.00E-04	3 21E-10	8 00E-03	0 00E+00	0.00E+00	2.59E+06	0 00E+00
CS134	4 04E+04	1.00E+00	32	6.19E+06	1.95E-05	3.16E-12	2 00E-04	8.16E-10	8 00E-03	7.40E-14	2.74E-04	2.59E+06	4.63E-03
CS137	9 82E+04	1 00E+00	32	6.19E+06	1.95E-05	3 16E-12	2 00E-04	1.98E-09	8.00E-03	7.96E-18	2.95E-08	2.59E+06	1.21E-06
Fines													
PU241	8.53E+04	1 00E-01	32	6.19E+06	1.95E-05	3.16E-12	3 00E-05	2 59E-11	8 00E-03	7.19E-20	2 66E-10	2.59E+06	1.43E-10
Y 90	6.32E+04	1 00E-01	32	6.19E+06	1.95E-05	3.16E-12	3 00E-05	1.92E-11	8.00E-03	1 89E-16	6 99E-07	2.59E+06	2.78E-07
PM147	2 63E+04	1 00E-01	32	6.19E+06	1.95E-05	3.16E-12	3 00E-05	7.97E-12	8 00E-03	7.48E-19	2.77E-09	2.59E+06	4.57E-10
CE144	8.14E+03	1.00E-01	32	6.19E+06	1.95E-05	3.16E-12	3.00E-05	2.47E-12	8 00E-03	8 53E-16	3.16E-06	2.59E+06	1 61E-07
PR144	8.14E+03	1.00E-01	32	6.19E+06	1 95E-05	3.16E-12	3 00E-05	2.47E-12	8.00E-03	1 90E-15	7.03E-06	2 59E+06	3 59E-07
EU154	5 90E+03	1 00E-01	32	6.19E+06	1.95E-05	3.16E-12	3 00E-05	1.79E-12	8 00E-03	6 00E-14	2 22E-04	2 59E+06	8 23E-06
CM244	1 01E+04	1.00E-01	32	6.19E+06	1.95E-05	3.16E-12	3.00E-05	3 06E-12	8 00E-03	6.90E-18	2.55E-08	2 59E+06	1 62E-09
PU238	5 81E+03	1 00E-01	32	6.19E+06	1.95E-05	3 16E-12	3 00E-05	1.76E-12	8 00E-03	6 56E-18	2 43E-08	2 59E+06	8 86E-10
SB125	2 30E+03	1 00E-01	32	6.19E+06	1.95E-05	3.16E-12	3.00E-05	6 97E-13	8 00E-03	1.98E-14	7 33E-05	2 59E+06	1.06E-06
EU155	1 65E+03	1.00E-01	32	6.19E+06	1.95E-05	3.16E-12	3.00E-05	5 00E-13	8 00E-03	2 49E-15	9 21E-06	2.59E+06	9 55E-08
AM241	9 00E+02	1 00E-01	32	6.19E+06	1 95E-05	3.16E-12	3 00E-05	2.73E-13	8.00E-03	8 58E-16	3.17E-06	2.59E+06	1.79E-08
TE125M	5 61E+02	1 00E-01	32	6.19E+06	1.95E-05	3.16E-12	3.00E-05	1.70E-13	8 00E-03	5 96E-16	2 21E-06	2 59E+06	7.77E-09
PU240	4 05E+02	1 00E-01	32	6 19E+06	1 95E-05	3.16E-12	3.00E-05	1.23E-13	8 00E-03	6 36E-18	2.35E-08	2.59E+06	5 99E-11
SM151	3.38E+02	1 00E-01	32	6.19E+06	1.95E-05	3.16E-12	3.00E-05	1 02E-13	8 00E-03	5 20E-20	1.92E-10	2.59E+06	4.08E-13
PU239	2 04E+02	1.00E-01	32	6.19E+06	1 95E-05	3.16E-12	3.00E-05	6.18E-14	8 00E-03	4 84E-18	1.79E-08	2.59E+06	2 29E-11
BA137M	9.27E+04	1.00E-01	32	6.19E+06	1.95E-05	3.16E-12	3 00E-05	2 81E-11	8 00E-03	2 82E-14	1.04E-04	2.59E+06	6.07E-05
RH106	1.59E+04	1 00E-01	32	6.19E+06	1 95E-05	3.16E-12	3 00E-05	4 82E-12	8 00E-03	1.01E-14	3.74E-05	2 59E+06	3.73E-06
PR144M	1 14E+02	1 00E-01	32	6 19E+06	1 95E-05	3.16E-12	3 00E-05	3 46E-14	8 00E-03	3.25E-16	1.20E-06	2.59E+06	8 61E-10
AM243	4 87E+01	1 00E-01	32	6.19E+06	1 95E-05	3.16E-12	3 00E-05	1.48E-14	8 00E-03	2.19E-15	8 10E-06	2 59E+06	2 48E-09
CM242	3 23E+01	1.00E-01	32	6 19E+06	1.95E-05	3.16E-12	3 00E-05	9 79E-15	8 00E-03	7.83E-18	2 90E-08	2 59E+06	5 88E-12
CM243	3 63E+01	1 00E-01	32	6.19E+06	1.95E-05	3.16E-12	3.00E-05	1.10E-14	8 00E-03	5.77E-15	2.13E-05	2.59E+06	4.87E-09
NP239	4.87E+01	1 00E-01	32	6.19E+06	1.95E-05	3.16E-12	3 00E-05	1.48E-14	8.00E-03	7.53E-15	2.79E-05	2.59E+06	8 52E-09
NP237	3 88E-01	1 00E-01	32	6.19E+06	1.95E-05	3.16E-12	3.00E-05	1.18E-16	8 00E-03	1 04E-15	3 85E-06	2.59E+06	9 38E-12
PU242	2.85E+00	1 00E-01	32	6.19E+06	1 95E-05	3.16E-12	3.00E-05	8 64E-16	8 00E-03	5 34E-18	1.98E-08	2.59E+06	3 54E-13
AM242	8 72E+00	1.00E-01	32	6.19E+06	1.95E-05	3 16E-12	3 00E-05	2 64E-15	8 00E-03	6 09E-16	2.25E-06	2.59E+06	1.23E-10
AM242M	8 76E+00	1 00E-01	32	6 19E+06	1 95E-05	3.16E-12	3 00E-05	2 66E-15	8.00E-03	3.80E-17	1.41E-07	2.59E+06	7.74E-12
												Total	2.70E-02

MPC-32													
Accident Conditions													
Effective Dose Equivalent From Submersion													
Nuclide	Inventory (Ci/Assy)	% remain airborne	No. Assy	MPC Vol (cm3)	Lacc Rate at Upstream (cm3/s)	Fraction Released per sec	Release Fraction	Release Rate (Ci/sec)	X/Q (sec/m3)	DCF (Sv/Bq)	DCF (mRem/uCi)	Occ Time (sec)	DDE (mRem)
Gases													
H 3	3 68E+02	1.00E+00	32	6.19E+06	1.95E-05	3.15E-12	0.30	1.11E-08	8.00E-03	0.00E+00	0 00E+00	2.59E+06	0 00E+00
I129	3 31E-02	1 00E+00	32	6 19E+06	1 95E-05	3.15E-12	0.30	1 00E-12	8 00E-03	6 66E-16	2.46E-06	2.59E+06	5.11E-08
KR 85	5 86E+03	1.00E+00	32	6.19E+06	1.95E-05	3.15E-12	0.30	1.77E-07	8 00E-03	1.34E-16	4.96E-07	2.59E+06	1 82E-03
Crud													
Co-60	2.18E+01	1 00E+00	32	6.19E+06	1 95E-05	3 15E-12	1 00	2.20E-09	8.00E-03	1 39E-13	5 14E-04	2 59E+06	2 34E-02
Volatiles													
SR 90	6.32E+04	1 00E+00	32	6.19E+06	1.95E-05	3.15E-12	2 00E-04	1.28E-09	8.00E-03	9.49E-18	3.51E-08	2.59E+06	9.28E-07
RU106	1 59E+04	1.00E+00	32	6.19E+06	1.95E-05	3.15E-12	2 00E-04	3.21E-10	8 00E-03	0 00E+00	0 00E+00	2.59E+06	0.00E+00
CS134	4 04E+04	1.00E+00	32	6.19E+06	1 95E-05	3 15E-12	2.00E-04	8.15E-10	8 00E-03	8.43E-14	3.12E-04	2.59E+06	5 27E-03
CS137	9 82E+04	1 00E+00	32	6.19E+06	1.95E-05	3.15E-12	2 00E-04	1 98E-09	8 00E-03	9 67E-18	3.58E-08	2 59E+06	1.47E-06
Fines													
PU241	8.53E+04	1 00E-01	32	6.19E+06	1.95E-05	3.15E-12	3 00E-05	2.58E-11	8.00E-03	8.67E-20	3 21E-10	2 59E+06	1 72E-10
Y 90	6 32E+04	1 00E-01	32	6.19E+06	1 95E-05	3 15E-12	3 00E-05	1.91E-11	8 00E-03	2.20E-16	8.14E-07	2.59E+06	3 23E-07
PM147	2 63E+04	1.00E-01	32	6.19E+06	1.95E-05	3 15E-12	3 00E-05	7.96E-12	8 00E-03	9.56E-19	3.54E-09	2 59E+06	5 83E-10
CE144	8 14E+03	1 00E-01	32	6 19E+06	1 95E-05	3.15E-12	3 00E-05	2 46E-12	8 00E-03	1 01E-15	3.74E-06	2.59E+06	1.91E-07
PR144	8 14E+03	1 00E-01	32	6.19E+06	1 95E-05	3.15E-12	3 00E-05	2.46E-12	8 00E-03	2.15E-15	7 96E-06	2 59E+06	4.06E-07
EU154	5 90E+03	1 00E-01	32	6 19E+06	1.95E-05	3 15E-12	3 00E-05	1.79E-12	8 00E-03	6 81E-14	2.52E-04	2 59E+06	9.32E-06
CM244	1 01E+04	1 00E-01	32	6 19E+06	1.95E-05	3.15E-12	3 00E-05	3 06E-12	8.00E-03	1 33E-17	4.92E-08	2.59E+06	3 12E-09
PU238	5.81E+03	1 00E-01	32	6.19E+06	1.95E-05	3.15E-12	3.00E-05	1.76E-12	8 00E-03	1 27E-17	4.70E-08	2.59E+06	1.71E-09
SB125	2 30E+03	1.00E-01	32	6.19E+06	1.95E-05	3.15E-12	3 00E-05	6 96E-13	8.00E-03	2 27E-14	8 40E-05	2 59E+06	1 21E-06
EU155	1 65E+03	1 00E-01	32	6.19E+06	1 95E-05	3.15E-12	3.00E-05	4.99E-13	8 00E-03	2.95E-15	1.09E-05	2 59E+06	1.13E-07
AM241	9 00E+02	1.00E-01	32	6.19E+06	1 95E-05	3.15E-12	3.00E-05	2.72E-13	8.00E-03	1.07E-15	3.96E-06	2.59E+06	2.23E-08
TE125M	5 61E+02	1.00E-01	32	6.19E+06	1.95E-05	3 15E-12	3 00E-05	1.70E-13	8.00E-03	8 48E-16	3.14E-06	2 59E+06	1 10E-08
PU240	4 05E+02	1.00E-01	32	6 19E+06	1.95E-05	3 15E-12	3 00E-05	1.23E-13	8.00E-03	1 23E-17	4 55E-08	2 59E+06	1.16E-10
SM151	3 38E+02	1 00E-01	32	6.19E+06	1.95E-05	3.15E-12	3.00E-05	1.02E-13	8 00E-03	8 80E-20	3.26E-10	2 59E+06	6.90E-13
PU239	2 04E+02	1.00E-01	32	6 19E+06	1.95E-05	3.15E-12	3 00E-05	6 17E-14	8 00E-03	7 55E-18	2.79E-08	2 59E+06	3 57E-11
BA137M	9 27E+04	1 00E-01	32	6.19E+06	1 95E-05	3.15E-12	3.00E-05	2 81E-11	8 00E-03	3 22E-14	1.19E-04	2.59E+06	6.93E-05
RH106	1.59E+04	1 00E-01	32	6.19E+06	1 95E-05	3.15E-12	3 00E-05	4 81E-12	8 00E-03	1 16E-14	4 29E-05	2 59E+06	4.28E-06
PR144M	1.14E+02	1.00E-01	32	6 19E+06	1.95E-05	3.15E-12	3 00E-05	3 45E-14	8 00E-03	4.20E-16	1.55E-06	2.59E+06	1.11E-09
AM243	4 87E+01	1 00E-01	32	6 19E+06	1 95E-05	3 15E-12	3 00E-05	1.47E-14	8.00E-03	2 61E-15	9.66E-06	2 59E+06	2.95E-09
CM242	3 23E+01	1 00E-01	32	6.19E+06	1 95E-05	3.15E-12	3 00E-05	9.78E-15	8.00E-03	1.48E-17	5.48E-08	2 59E+06	1.11E-11
CM243	3 63E+01	1 00E-01	32	6 19E+06	1 95E-05	3.15E-12	3 00E-05	1.10E-14	8 00E-03	6.68E-15	2 47E-05	2 59E+06	5 63E-09
NP239	4.87E+01	1 00E-01	32	6.19E+06	1 95E-05	3.15E-12	3 00E-05	1.47E-14	8.00E-03	8 73E-15	3.23E-05	2 59E+06	9 86E-09
NP237	3 88E-01	1 00E-01	32	6 19E+06	1 95E-05	3.15E-12	3 00E-05	1.17E-16	8 00E-03	1.26E-15	4.66E-06	2 59E+06	1.13E-11
PU242	2.85E+00	1 00E-01	32	6.19E+06	1 95E-05	3.15E-12	3 00E-05	8 63E-16	8 00E-03	1 03E-17	3 81E-08	2 59E+06	6.81E-13
AM242	8.72E+00	1 00E-01	32	6 19E+06	1.95E-05	3.15E-12	3 00E-05	2 64E-15	8.00E-03	7 30E-16	2 70E-06	2 59E+06	1.48E-10
AM242M	8.76E+00	1 00E-01	32	6 19E+06	1 95E-05	3.15E-12	3 00E-05	2.65E-15	8 00E-03	6 01E-17	2.22E-07	2 59E+06	1 22E-11
												Total	3 06E-02

MPC-32													
Accident Conditions													
Effective Dose Equivalent From Submersion													
Nuclide	Inventory (Ci/Assy)	% remain airborne	No. Assy	MPC Vol (cm3)	Lacc Rate at Upstream (cm3/s)	Fraction Released per sec	Release Fraction	Release Rate (Ci/sec)	X/Q (sec/m3)	DCF (Sv/Bq)	DCF (mRem/uCi)	Occ Time (sec)	DDE (mRem)
Gases													
H 3	3 68E+02	1 00E+00	32	6.19E+06	1.95E-05	3.15E-12	0.30	1.11E-08	8.00E-03	2.75E-18	1 02E-08	2.59E+06	2.35E-06
I129	3.31E-02	1 00E+00	32	6.19E+06	1 95E-05	3.15E-12	0.30	1.00E-12	8.00E-03	2.14E-16	7.92E-07	2.59E+06	1.64E-08
KR 85	5.86E+03	1 00E+00	32	6.19E+06	1.95E-05	3.15E-12	0.30	1.77E-07	8.00E-03	1.14E-16	4.22E-07	2.59E+06	1.55E-03
Crud													
Co-60	2.18E+01	1 00E+00	32	6.19E+06	1.95E-05	3.15E-12	1.00	2.20E-09	8.00E-03	1 24E-13	4.59E-04	2.59E+06	2 09E-02
Volatiles													
SR 90	6.32E+04	1 00E+00	32	6.19E+06	1.95E-05	3.15E-12	2.00E-04	1 28E-09	8 00E-03	6 44E-18	2.38E-08	2.59E+06	6 30E-07
RU106	1 59E+04	1 00E+00	32	6.19E+06	1.95E-05	3.15E-12	2 00E-04	3 21E-10	8 00E-03	0 00E+00	0.00E+00	2.59E+06	0 00E+00
CS134	4 04E+04	1 00E+00	32	6 19E+06	1.95E-05	3 15E-12	2 00E-04	8.15E-10	8 00E-03	7.37E-14	2.73E-04	2.59E+06	4 61E-03
CS137	9 82E+04	1 00E+00	32	6.19E+06	1 95E-05	3.15E-12	2.00E-04	1.98E-09	8 00E-03	6 68E-18	2 47E-08	2.59E+06	1.01E-06
Fines													
PU241	8 53E+04	1 00E-01	32	6.19E+06	1 95E-05	3.15E-12	3 00E-05	2 58E-11	8.00E-03	6 48E-20	2.40E-10	2.59E+06	1.28E-10
Y 90	6 32E+04	1 00E-01	32	6.19E+06	1.95E-05	3.15E-12	3.00E-05	1.91E-11	8 00E-03	1.77E-16	6.55E-07	2.59E+06	2 60E-07
PM147	2 63E+04	1 00E-01	32	6 19E+06	1.95E-05	3.15E-12	3 00E-05	7.96E-12	8 00E-03	5.45E-19	2.02E-09	2.59E+06	3 33E-10
CE144	8 14E+03	1 00E-01	32	6.19E+06	1 95E-05	3.15E-12	3.00E-05	2.46E-12	8 00E-03	7.69E-16	2.85E-06	2 59E+06	1 45E-07
PR144	8.14E+03	1 00E-01	32	6.19E+06	1.95E-05	3.15E-12	3 00E-05	2.46E-12	8.00E-03	1.90E-15	7.03E-06	2 59E+06	3 59E-07
EU154	5.90E+03	1 00E-01	32	6.19E+06	1.95E-05	3.15E-12	3 00E-05	1.79E-12	8.00E-03	5 99E-14	2.22E-04	2.59E+06	8.20E-06
CM244	1 01E+04	1.00E-01	32	6.19E+06	1.95E-05	3.15E-12	3 00E-05	3.06E-12	8 00E-03	7.08E-19	2.62E-09	2.59E+06	1.66E-10
PU238	5 81E+03	1 00E-01	32	6.19E+06	1.95E-05	3.15E-12	3 00E-05	1.76E-12	8.00E-03	1 06E-18	3 92E-09	2.59E+06	1.43E-10
SB125	2.30E+03	1 00E-01	32	6.19E+06	1.95E-05	3.15E-12	3 00E-05	6.96E-13	8 00E-03	1.95E-14	7.22E-05	2.59E+06	1 04E-06
EU155	1.65E+03	1 00E-01	32	6.19E+06	1.95E-05	3.15E-12	3 00E-05	4.99E-13	8.00E-03	2 22E-15	8.21E-06	2.59E+06	8.50E-08
AM241	9 00E+02	1.00E-01	32	6.19E+06	1.95E-05	3.15E-12	3.00E-05	2.72E-13	8 00E-03	6.74E-16	2.49E-06	2.59E+06	1.41E-08
TE125M	5 61E+02	1 00E-01	32	6.19E+06	1.95E-05	3.15E-12	3 00E-05	1.70E-13	8.00E-03	2.23E-16	8 25E-07	2.59E+06	2.90E-09
PU240	4 05E+02	1 00E-01	32	6.19E+06	1.95E-05	3.15E-12	3 00E-05	1.23E-13	8 00E-03	1.09E-18	4.03E-09	2 59E+06	1.02E-11
SM151	3 38E+02	1 00E-01	32	6.19E+06	1.95E-05	3.15E-12	3.00E-05	1.02E-13	8 00E-03	7.08E-21	2.62E-11	2.59E+06	5.55E-14
PU239	2 04E+02	1.00E-01	32	6.19E+06	1.95E-05	3.15E-12	3 00E-05	6.17E-14	8.00E-03	2 65E-18	9.81E-09	2.59E+06	1.25E-11
BA137M	9.27E+04	1 00E-01	32	6.19E+06	1.95E-05	3.15E-12	3.00E-05	2.81E-11	8.00E-03	2.80E-14	1.04E-04	2.59E+06	6 02E-05
RH106	1 59E+04	1.00E-01	32	6.19E+06	1.95E-05	3.15E-12	3 00E-05	4 81E-12	8 00E-03	1 01E-14	3.74E-05	2.59E+06	3 73E-06
PR144M	1.14E+02	1.00E-01	32	6.19E+06	1 95E-05	3.15E-12	3.00E-05	3.45E-14	8.00E-03	2 00E-16	7.40E-07	2.59E+06	5.29E-10
AM243	4 87E+01	1 00E-01	32	6 19E+06	1.95E-05	3 15E-12	3.00E-05	1.47E-14	8 00E-03	1.92E-15	7.10E-06	2.59E+06	2.17E-09
CM242	3 23E+01	1 00E-01	32	6.19E+06	1.95E-05	3.15E-12	3 00E-05	9.78E-15	8.00E-03	1.13E-18	4.18E-09	2.59E+06	8.47E-13
CM243	3.63E+01	1 00E-01	32	6 19E+06	1.95E-05	3.15E-12	3 00E-05	1.10E-14	8 00E-03	5.50E-15	2.04E-05	2.59E+06	4 63E-09
NP239	4 87E+01	1 00E-01	32	6.19E+06	1.95E-05	3.15E-12	3.00E-05	1.47E-14	8 00E-03	7.18E-15	2.66E-05	2.59E+06	8.11E-09
NP237	3.88E-01	1 00E-01	32	6.19E+06	1 95E-05	3.15E-12	3 00E-05	1.17E-16	8 00E-03	9.02E-16	3.34E-06	2.59E+06	8 12E-12
PU242	2 85E+00	1 00E-01	32	6 19E+06	1.95E-05	3.15E-12	3.00E-05	8 63E-16	8 00E-03	9 69E-19	3.59E-09	2 59E+06	6 41E-14
AM242	8.72E+00	1 00E-01	32	6.19E+06	1.95E-05	3.15E-12	3.00E-05	2.64E-15	8 00E-03	5.51E-16	2.04E-06	2 59E+06	1.11E-10
AM242M	8.76E+00	1.00E-01	32	6.19E+06	1 95E-05	3.15E-12	3 00E-05	2 65E-15	8 00E-03	1.72E-17	6.36E-08	2 59E+06	3 50E-12
												Total	2.71E-02

MPC-32														
Accident Conditions														
Effective Dose Equivalent From Submersion														
Nuclide	Inventory (Ci/Assy)	% remain airborne	No. Assy	MPC Vol (cm3)	Lacc Rate at Upstream (cm3/s)	Fraction Released per sec	Release Fraction	Release Rate (Ci/sec)	X/Q (sec/m3)	DCF (Sv/Bq)	DCF (mRem/uCi)	Occ Time (sec)	DDE (mRem)	
Gases														
H 3	3.68E+02	1 00E+00	32	6.19E+06	1.95E-05	3.15E-12	0.30	1.11E-08	8.00E-03	0.00E+00	0.00E+00	2.59E+06	0 00E+00	
I129	3 31E-02	1.00E+00	32	6.19E+06	1.95E-05	3.15E-12	0.30	1.00E-12	8.00E-03	1 64E-16	6 07E-07	2.59E+06	1.26E-08	
KR 85	5 86E+03	1.00E+00	32	6.19E+06	1.95E-05	3.15E-12	0.30	1.77E-07	8 00E-03	1 09E-16	4 03E-07	2.59E+06	1.48E-03	
Crud														
Co-60	2 18E+01	1 00E+00	32	6 19E+06	1 95E-05	3 15E-12	1 00	2 20E-09	8 00E-03	1.23E-13	4.55E-04	2.59E+06	2 07E-02	
Volatiles														
SR 90	6 32E+04	1 00E+00	32	6.19E+06	1.95E-05	3 15E-12	2 00E-04	1 28E-09	8 00E-03	5.44E-18	2.01E-08	2.59E+06	5.32E-07	
RU106	1.59E+04	1 00E+00	32	6 19E+06	1.95E-05	3.15E-12	2.00E-04	3.21E-10	8.00E-03	0 00E+00	0.00E+00	2.59E+06	0.00E+00	
CS134	4.04E+04	1 00E+00	32	6 19E+06	1 95E-05	3.15E-12	2 00E-04	8.15E-10	8.00E-03	7.19E-14	2.66E-04	2 59E+06	4.49E-03	
CS137	9 82E+04	1 00E+00	32	6.19E+06	1.95E-05	3.15E-12	2 00E-04	1.98E-09	8 00E-03	5.70E-18	2.11E-08	2.59E+06	8 66E-07	
Fines														
PU241	8 53E+04	1 00E-01	32	6 19E+06	1.95E-05	3 15E-12	3.00E-05	2.58E-11	8 00E-03	5 63E-20	2.08E-10	2 59E+06	1.11E-10	
Y 90	6 32E+04	1 00E-01	32	6.19E+06	1.95E-05	3 15E-12	3 00E-05	1.91E-11	8 00E-03	1.62E-16	5.99E-07	2 59E+06	2.38E-07	
PM147	2 63E+04	1 00E-01	32	6.19E+06	1 95E-05	3 15E-12	3 00E-05	7.96E-12	8 00E-03	4 46E-19	1.65E-09	2.59E+06	2.72E-10	
CE144	8 14E+03	1.00E-01	32	6.19E+06	1.95E-05	3.15E-12	3.00E-05	2 46E-12	8.00E-03	6 68E-16	2 47E-06	2.59E+06	1 26E-07	
PR144	8 14E+03	1 00E-01	32	6.19E+06	1.95E-05	3.15E-12	3 00E-05	2.46E-12	8 00E-03	1.87E-15	6.92E-06	2.59E+06	3.53E-07	
EU154	5 90E+03	1.00E-01	32	6.19E+06	1.95E-05	3.15E-12	3 00E-05	1.79E-12	8 00E-03	5 87E-14	2.17E-04	2.59E+06	8 04E-06	
CM244	1.01E+04	1 00E-01	32	6 19E+06	1.95E-05	3 15E-12	3 00E-05	3 06E-12	8 00E-03	1.46E-18	5.40E-09	2 59E+06	3.42E-10	
PU238	5 81E+03	1 00E-01	32	6 19E+06	1.95E-05	3.15E-12	3.00E-05	1.76E-12	8 00E-03	1 68E-18	6.22E-09	2 59E+06	2.26E-10	
SB125	2 30E+03	1 00E-01	32	6.19E+06	1.95E-05	3.15E-12	3 00E-05	6 96E-13	8 00E-03	1 87E-14	6.92E-05	2 59E+06	9 97E-07	
EU155	1 65E+03	1 00E-01	32	6.19E+06	1.95E-05	3.15E-12	3.00E-05	4.99E-13	8 00E-03	1 85E-15	6 85E-06	2 59E+06	7.08E-08	
AM241	9 00E+02	1 00E-01	32	6 19E+06	1.95E-05	3.15E-12	3 00E-05	2.72E-13	8.00E-03	5 21E-16	1.93E-06	2.59E+06	1.09E-08	
TE125M	5 61E+02	1.00E-01	32	6.19E+06	1.95E-05	3.15E-12	3 00E-05	1.70E-13	8 00E-03	1.86E-16	6.88E-07	2 59E+06	2.42E-09	
PU240	4.05E+02	1 00E-01	32	6.19E+06	1.95E-05	3.15E-12	3 00E-05	1.23E-13	8 00E-03	1.65E-18	6.11E-09	2.59E+06	1.55E-11	
SM151	3 38E+02	1 00E-01	32	6.19E+06	1.95E-05	3.15E-12	3 00E-05	1.02E-13	8.00E-03	1.13E-20	4.18E-11	2.59E+06	8.86E-14	
PU239	2 04E+02	1.00E-01	32	6.19E+06	1 95E-05	3.15E-12	3 00E-05	6 17E-14	8 00E-03	2 67E-18	9 88E-09	2.59E+06	1.26E-11	
BA137M	9.27E+04	1.00E-01	32	6.19E+06	1.95E-05	3 15E-12	3 00E-05	2 81E-11	8.00E-03	2.73E-14	1.01E-04	2.59E+06	5 87E-05	
RH106	1.59E+04	1 00E-01	32	6.19E+06	1.95E-05	3.15E-12	3 00E-05	4.81E-12	8 00E-03	9 75E-15	3.61E-05	2 59E+06	3.60E-06	
PR144M	1.14E+02	1 00E-01	32	6.19E+06	1.95E-05	3.15E-12	3 00E-05	3.45E-14	8.00E-03	1 56E-16	5.77E-07	2 59E+06	4.13E-10	
AM243	4 87E+01	1 00E-01	32	6 19E+06	1 95E-05	3 15E-12	3 00E-05	1 47E-14	8 00E-03	1.55E-15	5 74E-06	2 59E+06	1.75E-09	
CM242	3 23E+01	1 00E-01	32	6.19E+06	1 95E-05	3 15E-12	3 00E-05	9 78E-15	8.00E-03	1.89E-18	6 99E-09	2 59E+06	1 42E-12	
CM243	3 63E+01	1 00E-01	32	6.19E+06	1 95E-05	3.15E-12	3 00E-05	1.10E-14	8.00E-03	5 00E-15	1.85E-05	2 59E+06	4.21E-09	
NP239	4 87E+01	1 00E-01	32	6.19E+06	1 95E-05	3.15E-12	3 00E-05	1.47E-14	8.00E-03	6.50E-15	2.41E-05	2.59E+06	7 34E-09	
NP237	3 88E-01	1.00E-01	32	6.19E+06	1.95E-05	3.15E-12	3.00E-05	1.17E-16	8.00E-03	7.69E-16	2 85E-06	2 59E+06	6 92E-12	
PU242	2 85E+00	1.00E-01	32	6 19E+06	1 95E-05	3.15E-12	3.00E-05	8 63E-16	8.00E-03	1 43E-18	5.29E-09	2 59E+06	9.46E-14	
AM242	8 72E+00	1 00E-01	32	6.19E+06	1.95E-05	3 15E-12	3 00E-05	2 64E-15	8 00E-03	4.77E-16	1.76E-06	2.59E+06	9 65E-11	
AM242M	8 76E+00	1.00E-01	32	6.19E+06	1.95E-05	3.15E-12	3 00E-05	2 65E-15	8 00E-03	1.72E-17	6.36E-08	2 59E+06	3 50E-12	
												Total	2.68E-02	

MPC-32														
Accident Conditions														
Effective Dose Equivalent From Submersion														
Nuclide	Inventory (Ci/Assy)	% remain airborne	No. Assy	MPC Vol (cm3)	L_{acc} Rate at Upstream (cm3/s)	Fraction Released per sec	Release Fraction	Release Rate (Ci/sec)	X/Q (sec/m3)	DCF (Sv/Bq)	DCF (mRem/uCi)	Occ Time (sec)	DDE (mRem)	
Gases														
H 3	3 68E+02	1 00E+00	32	6.19E+06	1.95E-05	3.15E-12	0.30	1.11E-08	8 00E-03	0 00E+00	0.00E+00	2.59E+06	0.00E+00	
I129	3.31E-02	1.00E+00	32	6.19E+06	1 95E-05	3.15E-12	0 30	1 00E-12	8 00E-03	1.10E-15	4.07E-06	2.59E+06	8 45E-08	
KR 85	5 86E+03	1 00E+00	32	6.19E+06	1.95E-05	3.15E-12	0.30	1.77E-07	8 00E-03	2.20E-16	8.14E-07	2.59E+06	2.99E-03	
Crud														
Co-60	2.18E+01	1 00E+00	32	6.19E+06	1 95E-05	3.15E-12	1 00	2.20E-09	8 00E-03	1.78E-13	6.59E-04	2.59E+06	3 00E-02	
Volatiles														
SR 90	6.32E+04	1.00E+00	32	6.19E+06	1.95E-05	3.15E-12	2.00E-04	1.28E-09	8.00E-03	2.28E-17	8.44E-08	2.59E+06	2.23E-06	
RU106	1.59E+04	1.00E+00	32	6.19E+06	1.95E-05	3.15E-12	2.00E-04	3.21E-10	8.00E-03	0 00E+00	0.00E+00	2.59E+06	0.00E+00	
CS134	4 04E+04	1 00E+00	32	6.19E+06	1.95E-05	3.15E-12	2 00E-04	8.15E-10	8 00E-03	1.20E-13	4.44E-04	2.59E+06	7.50E-03	
CS137	9 82E+04	1 00E+00	32	6.19E+06	1.95E-05	3.15E-12	2 00E-04	1.98E-09	8 00E-03	2.29E-17	8.47E-08	2.59E+06	3.48E-06	
Fines														
PU241	8 53E+04	1 00E-01	32	6.19E+06	1.95E-05	3 15E-12	3 00E-05	2.58E-11	8 00E-03	2.19E-19	8 10E-10	2.59E+06	4.33E-10	
Y 90	6.32E+04	1 00E-01	32	6.19E+06	1 95E-05	3.15E-12	3 00E-05	1.91E-11	8 00E-03	4 44E-16	1.64E-06	2 59E+06	6.51E-07	
PM147	2.63E+04	1 00E-01	32	6.19E+06	1.95E-05	3.15E-12	3 00E-05	7.96E-12	8 00E-03	2.18E-18	8 07E-09	2.59E+06	1.33E-09	
CE144	8 14E+03	1 00E-01	32	6 19E+06	1.95E-05	3.15E-12	3 00E-05	2 46E-12	8 00E-03	2.49E-15	9.21E-06	2.59E+06	4.70E-07	
PR144	8.14E+03	1 00E-01	32	6 19E+06	1 95E-05	3.15E-12	3 00E-05	2 46E-12	8 00E-03	2 99E-15	1.11E-05	2.59E+06	5 65E-07	
EU154	5 90E+03	1 00E-01	32	6.19E+06	1.95E-05	3.15E-12	3.00E-05	1.79E-12	8.00E-03	9 43E-14	3.49E-04	2 59E+06	1.29E-05	
CM244	1 01E+04	1 00E-01	32	6.19E+06	1.95E-05	3.15E-12	3.00E-05	3.06E-12	8 00E-03	8 82E-18	3.26E-08	2 59E+06	2 07E-09	
PU238	5 81E+03	1 00E-01	32	6.19E+06	1.95E-05	3.15E-12	3 00E-05	1 76E-12	8 00E-03	9 30E-18	3 44E-08	2.59E+06	1.25E-09	
SB125	2 30E+03	1 00E-01	32	6.19E+06	1.95E-05	3 15E-12	3 00E-05	6 96E-13	8 00E-03	3 53E-14	1.31E-04	2 59E+06	1 88E-06	
EU155	1 65E+03	1 00E-01	32	6.19E+06	1.95E-05	3.15E-12	3 00E-05	4.99E-13	8 00E-03	8 09E-15	2 99E-05	2.59E+06	3.10E-07	
AM241	9.00E+02	1.00E-01	32	6.19E+06	1.95E-05	3.15E-12	3 00E-05	2.72E-13	8.00E-03	2.87E-15	1.06E-05	2.59E+06	5 99E-08	
TE125M	5 61E+02	1.00E-01	32	6.19E+06	1.95E-05	3.15E-12	3 00E-05	1.70E-13	8 00E-03	1 22E-15	4 51E-06	2.59E+06	1.59E-08	
PU240	4 05E+02	1 00E-01	32	6 19E+06	1.95E-05	3.15E-12	3.00E-05	1.23E-13	8 00E-03	9.26E-18	3.43E-08	2.59E+06	8.70E-11	
SM151	3 38E+02	1 00E-01	32	6.19E+06	1.95E-05	3.15E-12	3.00E-05	1.02E-13	8 00E-03	7.09E-20	2.62E-10	2.59E+06	5 56E-13	
PU239	2 04E+02	1 00E-01	32	6.19E+06	1.95E-05	3.15E-12	3 00E-05	6.17E-14	8 00E-03	9 47E-18	3 50E-08	2.59E+06	4.48E-11	
BA137M	9 27E+04	1 00E-01	32	6.19E+06	1.95E-05	3.15E-12	3 00E-05	2 81E-11	8 00E-03	4 63E-14	1.71E-04	2 59E+06	9 96E-05	
RH106	1.59E+04	1 00E-01	32	6.19E+06	1.95E-05	3.15E-12	3 00E-05	4 81E-12	8 00E-03	1.72E-14	6 36E-05	2 59E+06	6.35E-06	
PR144M	1.14E+02	1 00E-01	32	6.19E+06	1 95E-05	3 15E-12	3 00E-05	3 45E-14	8 00E-03	8.16E-16	3 02E-06	2.59E+06	2.16E-09	
AM243	4 87E+01	1.00E-01	32	6.19E+06	1.95E-05	3.15E-12	3 00E-05	1 47E-14	8 00E-03	7.47E-15	2.76E-05	2.59E+06	8.44E-09	
CM242	3 23E+01	1 00E-01	32	6.19E+06	1.95E-05	3.15E-12	3 00E-05	9.78E-15	8.00E-03	1 06E-17	3 92E-08	2 59E+06	7.94E-12	
CM243	3 63E+01	1.00E-01	32	6.19E+06	1.95E-05	3.15E-12	3 00E-05	1.10E-14	8 00E-03	1.50E-14	5 55E-05	2.59E+06	1.26E-08	
NP239	4.87E+01	1.00E-01	32	6.19E+06	1 95E-05	3.15E-12	3 00E-05	1.47E-14	8 00E-03	2 00E-14	7.40E-05	2.59E+06	2 26E-08	
NP237	3 88E-01	1 00E-01	32	6.19E+06	1.95E-05	3.15E-12	3.00E-05	1.17E-16	8.00E-03	3.20E-15	1.18E-05	2 59E+06	2 88E-11	
PU242	2 85E+00	1 00E-01	32	6.19E+06	1.95E-05	3.15E-12	3 00E-05	8.63E-16	8 00E-03	7.90E-18	2 92E-08	2 59E+06	5 22E-13	
AM242	8 72E+00	1 00E-01	32	6.19E+06	1 95E-05	3.15E-12	3 00E-05	2 64E-15	8 00E-03	1.88E-15	6 96E-06	2 59E+06	3 80E-10	
AM242M	8 76E+00	1 00E-01	32	6 19E+06	1 95E-05	3.15E-12	3 00E-05	2 65E-15	8 00E-03	7.94E-17	2.94E-07	2.59E+06	1 61E-11	
												Total	4 06E-02	

MPC-32														
Accident Conditions														
Effective Dose Equivalent From Submersion														
Nuclide	Inventory (Ci/Assy)	% remain airborne	No. Assy	MPC Vol (cm3)	Lacc Rate at Upstream (cm3/s)	Fraction Released per sec	Release Fraction	Release Rate (Ci/sec)	X/Q (sec/m3)	DCF (Sv/Bq)	DCF (mRem/uCi)	Occ Time (sec)	DDE (mRem)	
Gases														
H 3	3 68E+02	1 00E+00	32	6.19E+06	1 95E-05	3.15E-12	0.30	1.11E-08	8.00E-03	0 00E+00	0 00E+00	2.59E+06	0 00E+00	
I129	3 31E-02	1.00E+00	32	6.19E+06	1.95E-05	3.15E-12	0.30	1.00E-12	8.00E-03	3 86E-16	1 43E-06	2.59E+06	2.96E-08	
KR 85	5 86E+03	1 00E+00	32	6.19E+06	1 95E-05	3.15E-12	0.30	1.77E-07	8 00E-03	1.18E-16	4.37E-07	2 59E+06	1.60E-03	
Crud														
Co-60	2.18E+01	1 00E+00	32	6 19E+06	1 95E-05	3.15E-12	1.00	2 20E-09	8 00E-03	1 27E-13	4 70E-04	2.59E+06	2.14E-02	
Volatiles														
SR 90	6 32E+04	1.00E+00	32	6 19E+06	1 95E-05	3.15E-12	2 00E-04	1.28E-09	8 00E-03	7.33E-18	2.71E-08	2 59E+06	7.17E-07	
RU106	1 59E+04	1 00E+00	32	6 19E+06	1.95E-05	3 15E-12	2.00E-04	3 21E-10	8.00E-03	0 00E+00	0 00E+00	2.59E+06	0 00E+00	
CS134	4 04E+04	1 00E+00	32	6 19E+06	1.95E-05	3.15E-12	2.00E-04	8.15E-10	8 00E-03	7.57E-14	2 80E-04	2.59E+06	4.73E-03	
CS137	9 82E+04	1 00E+00	32	6.19E+06	1.95E-05	3.15E-12	2 00E-04	1.98E-09	8 00E-03	7.55E-18	2 79E-08	2.59E+06	1 15E-06	
Fines														
PU241	8.53E+04	1 00E-01	32	6 19E+06	1.95E-05	3 15E-12	3.00E-05	2.58E-11	8.00E-03	6 98E-20	2.58E-10	2.59E+06	1.38E-10	
Y 90	6.32E+04	1 00E-01	32	6 19E+06	1 95E-05	3.15E-12	3.00E-05	1.91E-11	8 00E-03	1 87E-16	6.92E-07	2 59E+06	2.74E-07	
PM147	2.63E+04	1 00E-01	32	6 19E+06	1.95E-05	3.15E-12	3 00E-05	7.96E-12	8 00E-03	6.75E-19	2 50E-09	2 59E+06	4.12E-10	
CE144	8.14E+03	1 00E-01	32	6.19E+06	1.95E-05	3.15E-12	3 00E-05	2 46E-12	8 00E-03	8 33E-16	3.08E-06	2.59E+06	1.57E-07	
PR144	8 14E+03	1.00E-01	32	6.19E+06	1 95E-05	3.15E-12	3.00E-05	2.46E-12	8 00E-03	1.95E-15	7.22E-06	2.59E+06	3 68E-07	
EU154	5 90E+03	1 00E-01	32	6.19E+06	1 95E-05	3 15E-12	3 00E-05	1 79E-12	8.00E-03	6 15E-14	2.28E-04	2.59E+06	8.42E-06	
CM244	1.01E+04	1 00E-01	32	6 19E+06	1.95E-05	3.15E-12	3 00E-05	3.06E-12	8 00E-03	4.19E-18	1.55E-08	2 59E+06	9.82E-10	
PU238	5 81E+03	1 00E-01	32	6 19E+06	1 95E-05	3 15E-12	3 00E-05	1 76E-12	8 00E-03	4.01E-18	1.48E-08	2.59E+06	5.41E-10	
SB125	2.30E+03	1 00E-01	32	6.19E+06	1 95E-05	3.15E-12	3.00E-05	6 96E-13	8 00E-03	2 01E-14	7.44E-05	2.59E+06	1.07E-06	
EU155	1 65E+03	1 00E-01	32	6.19E+06	1.95E-05	3 15E-12	3 00E-05	4.99E-13	8 00E-03	2.41E-15	8.92E-06	2 59E+06	9 23E-08	
AM241	9.00E+02	1 00E-01	32	6.19E+06	1 95E-05	3.15E-12	3.00E-05	2.72E-13	8.00E-03	7 83E-16	2.90E-06	2.59E+06	1.64E-08	
TE125M	5.61E+02	1 00E-01	32	6.19E+06	1 95E-05	3.15E-12	3.00E-05	1.70E-13	8.00E-03	4 64E-16	1.72E-06	2 59E+06	6 04E-09	
PU240	4 05E+02	1 00E-01	32	6 19E+06	1 95E-05	3.15E-12	3 00E-05	1 23E-13	8 00E-03	3 92E-18	1 45E-08	2.59E+06	3 68E-11	
SM151	3 38E+02	1.00E-01	32	6 19E+06	1.95E-05	3.15E-12	3.00E-05	1.02E-13	8 00E-03	3.58E-20	1 32E-10	2.59E+06	2 81E-13	
PU239	2 04E+02	1.00E-01	32	6.19E+06	1 95E-05	3 15E-12	3 00E-05	6.17E-14	8.00E-03	3 88E-18	1 44E-08	2 59E+06	1 84E-11	
BA137M	9 27E+04	1 00E-01	32	6 19E+06	1 95E-05	3 15E-12	3 00E-05	2 81E-11	8 00E-03	2.88E-14	1 07E-04	2.59E+06	6 19E-05	
RH106	1 59E+04	1 00E-01	32	6.19E+06	1 95E-05	3.15E-12	3.00E-05	4.81E-12	8 00E-03	1.03E-14	3 81E-05	2.59E+06	3 80E-06	
PR144M	1 14E+02	1 00E-01	32	6.19E+06	1 95E-05	3.15E-12	3 00E-05	3 45E-14	8.00E-03	2 81E-16	1 04E-06	2 59E+06	7 43E-10	
AM243	4 87E+01	1 00E-01	32	6.19E+06	1.95E-05	3 15E-12	3 00E-05	1.47E-14	8.00E-03	2 09E-15	7.73E-06	2 59E+06	2.36E-09	
CM242	3 23E+01	1 00E-01	32	6.19E+06	1.95E-05	3 15E-12	3.00E-05	9 78E-15	8 00E-03	4.91E-18	1 82E-08	2.59E+06	3 68E-12	
CM243	3 63E+01	1 00E-01	32	6.19E+06	1.95E-05	3 15E-12	3 00E-05	1.10E-14	8 00E-03	5 76E-15	2.13E-05	2 59E+06	4 85E-09	
NP239	4 87E+01	1 00E-01	32	6.19E+06	1 95E-05	3.15E-12	3 00E-05	1.47E-14	8 00E-03	7.52E-15	2 78E-05	2.59E+06	8 50E-09	
NP237	3 88E-01	1 00E-01	32	6.19E+06	1 95E-05	3.15E-12	3.00E-05	1.17E-16	8 00E-03	9.94E-16	3.68E-06	2 59E+06	8.95E-12	
PU242	2 85E+00	1 00E-01	32	6 19E+06	1 95E-05	3.15E-12	3.00E-05	8 63E-16	8 00E-03	3 32E-18	1 23E-08	2.59E+06	2 20E-13	
AM242	8 72E+00	1 00E-01	32	6 19E+06	1.95E-05	3.15E-12	3 00E-05	2 64E-15	8 00E-03	5 94E-16	2 20E-06	2.59E+06	1 20E-10	
AM242M	8 76E+00	1.00E-01	32	6.19E+06	1 95E-05	3 15E-12	3 00E-05	2 65E-15	8 00E-03	2 95E-17	1 09E-07	2.59E+06	6 00E-12	
												Total	2.78E-02	

MPC-32														
Accident Conditions														
Effective Dose Equivalent From Submersion														
Nuclide	Inventory (Ci/Assy)	% remain airborne	No. Assy	MPC Vol (cm3)	Lacc Rate at Upstream (cm3/s)	Fraction Released per sec	Release Fraction	Release Rate (Ci/sec)	X/Q (sec/m3)	DCF (Sv/Bq)	DCF (mRem/uCi)	Occ Time (sec)	DDE (mRem)	
Gases														
H 3	3 68E+02	1 00E+00	32	6.19E+06	1.95E-05	3.15E-12	0.30	1.11E-08	8 00E-03	3.31E-19	1.22E-09	2 59E+06	2.83E-07	
I129	3.31E-02	1.00E+00	32	6.19E+06	1.95E-05	3.15E-12	0 30	1.00E-12	8.00E-03	3.80E-16	1.41E-06	2.59E+06	2.92E-08	
KR 85	5 86E+03	1 00E+00	32	6.19E+06	1 95E-05	3 15E-12	0.30	1.77E-07	8 00E-03	1.19E-16	4 40E-07	2.59E+06	1.62E-03	
Crud														
Co-60	2.18E+01	1 00E+00	32	6.19E+06	1.95E-05	3 15E-12	1 00	2.20E-09	8 00E-03	1.26E-13	4.66E-04	2.59E+06	2.12E-02	
Volatiles														
SR 90	6.32E+04	1 00E+00	32	6.19E+06	1.95E-05	3.15E-12	2.00E-04	1.28E-09	8 00E-03	7 53E-18	2.79E-08	2.59E+06	7.36E-07	
RU106	1.59E+04	1 00E+00	32	6.19E+06	1 95E-05	3.15E-12	2.00E-04	3.21E-10	8 00E-03	0 00E+00	0 00E+00	2.59E+06	0 00E+00	
CS134	4 04E+04	1 00E+00	32	6.19E+06	1.95E-05	3 15E-12	2 00E-04	8.15E-10	8 00E-03	7 57E-14	2 80E-04	2.59E+06	4.73E-03	
CS137	9 82E+04	1.00E+00	32	6.19E+06	1.95E-05	3.15E-12	2.00E-04	1 98E-09	8 00E-03	7.74E-18	2 86E-08	2 59E+06	1.18E-06	
Fines														
PU241	8 53E+04	1 00E-01	32	6.19E+06	1.95E-05	3.15E-12	3 00E-05	2.58E-11	8.00E-03	7.25E-20	2.68E-10	2.59E+06	1.43E-10	
Y 90	6 32E+04	1.00E-01	32	6 19E+06	1.95E-05	3.15E-12	3 00E-05	1.91E-11	8 00E-03	1.90E-16	7 03E-07	2.59E+06	2.79E-07	
PM147	2.63E+04	1 00E-01	32	6.19E+06	1.95E-05	3.15E-12	3 00E-05	7.96E-12	8 00E-03	6 93E-19	2 56E-09	2.59E+06	4 23E-10	
CE144	8 14E+03	1 00E-01	32	6.19E+06	1 95E-05	3.15E-12	3 00E-05	2.46E-12	8.00E-03	8.53E-16	3.16E-06	2.59E+06	1.61E-07	
PR144	8 14E+03	1 00E-01	32	6.19E+06	1 95E-05	3.15E-12	3 00E-05	2.46E-12	8.00E-03	1.95E-15	7.22E-06	2.59E+06	3 68E-07	
EU154	5 90E+03	1.00E-01	32	6.19E+06	1.95E-05	3.15E-12	3 00E-05	1.79E-12	8 00E-03	6.14E-14	2 27E-04	2 59E+06	8.41E-06	
CM244	1 01E+04	1.00E-01	32	6 19E+06	1.95E-05	3.15E-12	3 00E-05	3 06E-12	8 00E-03	4 91E-18	1.82E-08	2 59E+06	1.15E-09	
PU238	5 81E+03	1 00E-01	32	6.19E+06	1.95E-05	3.15E-12	3.00E-05	1.76E-12	8 00E-03	4 88E-18	1.81E-08	2 59E+06	6 58E-10	
SB125	2 30E+03	1.00E-01	32	6.19E+06	1.95E-05	3.15E-12	3 00E-05	6.96E-13	8.00E-03	2 02E-14	7.47E-05	2.59E+06	1.08E-06	
EU155	1.65E+03	1 00E-01	32	6.19E+06	1.95E-05	3.15E-12	3 00E-05	4.99E-13	8 00E-03	2.49E-15	9.21E-06	2.59E+06	9.53E-08	
AM241	9 00E+02	1 00E-01	32	6.19E+06	1 95E-05	3 15E-12	3 00E-05	2.72E-13	8.00E-03	8.18E-16	3.03E-06	2.59E+06	1.71E-08	
TE125M	5 61E+02	1.00E-01	32	6.19E+06	1.95E-05	3.15E-12	3 00E-05	1.70E-13	8 00E-03	4 53E-16	1 68E-06	2 59E+06	5 90E-09	
PU240	4 05E+02	1.00E-01	32	6.19E+06	1.95E-05	3.15E-12	3 00E-05	1.23E-13	8.00E-03	4.75E-18	1.76E-08	2.59E+06	4.46E-11	
SM151	3 38E+02	1.00E-01	32	6 19E+06	1 95E-05	3.15E-12	3.00E-05	1.02E-13	8 00E-03	3 61E-20	1.34E-10	2.59E+06	2 83E-13	
PU239	2 04E+02	1 00E-01	32	6.19E+06	1.95E-05	3.15E-12	3.00E-05	6.17E-14	8.00E-03	4.24E-18	1.57E-08	2.59E+06	2.01E-11	
BA137M	9 27E+04	1.00E-01	32	6.19E+06	1.95E-05	3.15E-12	3.00E-05	2.81E-11	8.00E-03	2 88E-14	1.07E-04	2.59E+06	6.19E-05	
RH106	1 59E+04	1.00E-01	32	6.19E+06	1.95E-05	3.15E-12	3 00E-05	4.81E-12	8.00E-03	1.04E-14	3 85E-05	2.59E+06	3.84E-06	
PR144M	1.14E+02	1.00E-01	32	6.19E+06	1.95E-05	3.15E-12	3.00E-05	3.45E-14	8 00E-03	2.79E-16	1.03E-06	2.59E+06	7.38E-10	
AM243	4.87E+01	1 00E-01	32	6.19E+06	1.95E-05	3.15E-12	3.00E-05	1.47E-14	8 00E-03	2.18E-15	8.07E-06	2.59E+06	2.46E-09	
CM242	3 23E+01	1 00E-01	32	6.19E+06	1.95E-05	3 15E-12	3 00E-05	9.78E-15	8 00E-03	5 69E-18	2.11E-08	2 59E+06	4 26E-12	
CM243	3 63E+01	1.00E-01	32	6.19E+06	1.95E-05	3.15E-12	3 00E-05	1.10E-14	8.00E-03	5 88E-15	2.18E-05	2.59E+06	4 95E-09	
NP239	4 87E+01	1.00E-01	32	6.19E+06	1.95E-05	3 15E-12	3 00E-05	1.47E-14	8 00E-03	7 69E-15	2 85E-05	2.59E+06	8 69E-09	
NP237	3 88E-01	1.00E-01	32	6.19E+06	1.95E-05	3.15E-12	3 00E-05	1.17E-16	8 00E-03	1.03E-15	3 81E-06	2.59E+06	9.27E-12	
PU242	2 85E+00	1 00E-01	32	6.19E+06	1 95E-05	3.15E-12	3.00E-05	8 63E-16	8.00E-03	4 01E-18	1.48E-08	2.59E+06	2 65E-13	
AM242	8 72E+00	1.00E-01	32	6.19E+06	1.95E-05	3.15E-12	3 00E-05	2.64E-15	8.00E-03	6.15E-16	2.28E-06	2.59E+06	1.24E-10	
AM242M	8 76E+00	1 00E-01	32	6.19E+06	1.95E-05	3.15E-12	3.00E-05	2 65E-15	8 00E-03	3 17E-17	1.17E-07	2.59E+06	6.44E-12	
												Total	2.76E-02	

MPC-32													
Accident Conditions													
Effective Dose Equivalent From Submersion													
Nuclide	Inventory (Ci/Assy)	% remain airborne	No. Assy	MPC Vol (cm3)	Lacc Rate at Upstream (cm3/s)	Fraction Released per sec	Release Fraction	Release Rate (Ci/sec)	X/Q (sec/m3)	DCF (Sv/Bq)	DCF (mRem/uCi)	Occ Time (sec)	SDE (mRem)
Gases													
H 3	3 68E+02	1.00E+00	32	6 19E+06	1.95E-05	3.15E-12	0 30	1.11E-08	8.00E-03	0 00E+00	0.00E+00	2.59E+06	0 00E+00
I129	3 31E-02	1 00E+00	32	6.19E+06	1.95E-05	3.15E-12	0.30	1.00E-12	8 00E-03	1.10E-15	4 07E-06	2 59E+06	8 45E-08
KR 85	5 86E+03	1 00E+00	32	6 19E+06	1 95E-05	3 15E-12	0 30	1 77E-07	8 00E-03	1 32E-14	4.88E-05	2 59E+06	1.79E-01
Crud													
Co-60	2.18E+01	1.00E+00	32	6.19E+06	1 95E-05	3.15E-12	1 00	2 20E-09	8 00E-03	1 45E-13	5.37E-04	2.59E+06	2 44E-02
Volatiles													
SR 90	6 32E+04	1 00E+00	32	6.19E+06	1.95E-05	3.15E-12	2.00E-04	1.28E-09	8 00E-03	9 20E-15	3.40E-05	2 59E+06	8.99E-04
RU106	1 59E+04	1 00E+00	32	6.19E+06	1.95E-05	3.15E-12	2 00E-04	3 21E-10	8 00E-03	0 00E+00	0 00E+00	2 59E+06	0 00E+00
CS134	4 04E+04	1 00E+00	32	6 19E+06	1.95E-05	3.15E-12	2 00E-04	8.15E-10	8 00E-03	9 45E-14	3.50E-04	2 59E+06	5 91E-03
CS137	9 82E+04	1 00E+00	32	6.19E+06	1 95E-05	3 15E-12	2 00E-04	1.98E-09	8.00E-03	8 63E-15	3 19E-05	2 59E+06	1.31E-03
Fines													
PU241	8 53E+04	1 00E-01	32	6.19E+06	1 95E-05	3.15E-12	3 00E-05	2.58E-11	8 00E-03	1.17E-19	4 33E-10	2 59E+06	2.32E-10
Y 90	6 32E+04	1.00E-01	32	6 19E+06	1.95E-05	3 15E-12	3 00E-05	1 91E-11	8 00E-03	6 24E-14	2.31E-04	2.59E+06	9.15E-05
PM147	2 63E+04	1 00E-01	32	6.19E+06	1.95E-05	3 15E-12	3.00E-05	7.96E-12	8.00E-03	8.11E-16	3.00E-06	2 59E+06	4.95E-07
CE144	8 14E+03	1.00E-01	32	6 19E+06	1.95E-05	3 15E-12	3.00E-05	2.46E-12	8.00E-03	2 93E-15	1.08E-05	2.59E+06	5.53E-07
PR144	8.14E+03	1.00E-01	32	6 19E+06	1 95E-05	3.15E-12	3 00E-05	2.46E-12	8 00E-03	8.43E-14	3.12E-04	2.59E+06	1.59E-05
EU154	5 90E+03	1 00E-01	32	6 19E+06	1 95E-05	3 15E-12	3 00E-05	1 79E-12	8 00E-03	8.29E-14	3.07E-04	2.59E+06	1.13E-05
CM244	1.01E+04	1 00E-01	32	6.19E+06	1 95E-05	3.15E-12	3 00E-05	3 06E-12	8.00E-03	3 91E-17	1.45E-07	2 59E+06	9.16E-09
PU238	5 81E+03	1 00E-01	32	6 19E+06	1 95E-05	3.15E-12	3 00E-05	1.76E-12	8 00E-03	4 09E-17	1.51E-07	2 59E+06	5.51E-09
SB125	2 30E+03	1.00E-01	32	6.19E+06	1.95E-05	3 15E-12	3.00E-05	6 96E-13	8 00E-03	2.65E-14	9 81E-05	2.59E+06	1.41E-06
EU155	1 65E+03	1 00E-01	32	6.19E+06	1 95E-05	3 15E-12	3 00E-05	4 99E-13	8.00E-03	3 39E-15	1.25E-05	2 59E+06	1.30E-07
AM241	9 00E+02	1.00E-01	32	6 19E+06	1.95E-05	3.15E-12	3.00E-05	2.72E-13	8 00E-03	1.28E-15	4 74E-06	2.59E+06	2 67E-08
TE125M	5 61E+02	1 00E-01	32	6 19E+06	1 95E-05	3.15E-12	3 00E-05	1.70E-13	8 00E-03	1 94E-15	7.18E-06	2.59E+06	2.52E-08
PU240	4.05E+02	1 00E-01	32	6 19E+06	1 95E-05	3 15E-12	3 00E-05	1 23E-13	8 00E-03	3.92E-17	1 45E-07	2.59E+06	3 68E-10
SM151	3 38E+02	1 00E-01	32	6 19E+06	1 95E-05	3.15E-12	3 00E-05	1.02E-13	8.00E-03	1.90E-19	7.03E-10	2.59E+06	1.49E-12
PU239	2 04E+02	1.00E-01	32	6 19E+06	1.95E-05	3.15E-12	3.00E-05	6.17E-14	8.00E-03	1.86E-17	6 88E-08	2 59E+06	8.80E-11
BA137M	9 27E+04	1 00E-01	32	6.19E+06	1 95E-05	3.15E-12	3 00E-05	2 81E-11	8.00E-03	3 73E-14	1.38E-04	2 59E+06	8 02E-05
RH106	1.59E+04	1 00E-01	32	6 19E+06	1.95E-05	3.15E-12	3 00E-05	4 81E-12	8.00E-03	1 09E-13	4 03E-04	2.59E+06	4.02E-05
PR144M	1.14E+02	1.00E-01	32	6.19E+06	1 95E-05	3.15E-12	3 00E-05	3 45E-14	8 00E-03	5 08E-16	1.88E-06	2.59E+06	1.34E-09
AM243	4 87E+01	1 00E-01	32	6 19E+06	1 95E-05	3.15E-12	3 00E-05	1 47E-14	8.00E-03	2.75E-15	1 02E-05	2.59E+06	3 11E-09
CM242	3 23E+01	1 00E-01	32	6.19E+06	1 95E-05	3.15E-12	3.00E-05	9.78E-15	8 00E-03	4.29E-17	1 59E-07	2.59E+06	3.22E-11
CM243	3 63E+01	1.00E-01	32	6 19E+06	1.95E-05	3.15E-12	3 00E-05	1 10E-14	8 00E-03	9.79E-15	3 62E-05	2 59E+06	8 25E-09
NP239	4.87E+01	1.00E-01	32	6 19E+06	1 95E-05	3.15E-12	3 00E-05	1 47E-14	8.00E-03	1.60E-14	5 92E-05	2.59E+06	1 81E-08
NP237	3 88E-01	1.00E-01	32	6 19E+06	1.95E-05	3.15E-12	3.00E-05	1.17E-16	8.00E-03	1.54E-15	5 70E-06	2 59E+06	1.39E-11
PU242	2 85E+00	1 00E-01	32	6.19E+06	1 95E-05	3.15E-12	3 00E-05	8.63E-16	8 00E-03	3 27E-17	1.21E-07	2 59E+06	2 16E-12
AM242	8.72E+00	1.00E-01	32	6.19E+06	1 95E-05	3.15E-12	3 00E-05	2.64E-15	8 00E-03	8.20E-15	3 03E-05	2.59E+06	1.66E-09
AM242M	8 76E+00	1.00E-01	32	6.19E+06	1 95E-05	3.15E-12	3.00E-05	2.65E-15	8 00E-03	1 36E-16	5 03E-07	2 59E+06	2.76E-11
												Total	2 12E-01

MPC-68															
Normal Conditions															
Committed Effective Dose Equivalent From Inhalation															
Nuclide	Inventory (Ci/Assy)	% available for release	% remain airborne	No. Assy	MPC Vol (cm3)	L_{nor} Rate at Upstream (cm3/s)	Fraction Released per sec	Release Fraction	Release Rate (Ci/sec)	X/Q (sec/m3)	Breathing Rate (m3/sec)	DCF (Sv/Bq)	DCF (mRem/uCi)	Occ Time (sec)	CDE (mRem)
									Gases						
H 3	1 24E+02	2 5%	1.00E+00	68	5 99E+06	1.12E-05	1.87E-12	0.30	1.18E-10	1.60E-04	3.30E-04	1.73E-11	6.40E-02	3.15E+07	1.26E-05
I129	1.12E-02	2.5%	1 00E+00	68	5 99E+06	1.12E-05	1.87E-12	0.30	1.07E-14	1 60E-04	3 30E-04	8 69E-11	3 22E-01	3.15E+07	5.71E-09
KR 85	2.04E+03	2 5%	1 00E+00	68	5 99E+06	1.12E-05	1 87E-12	0 30	1.95E-09	1 60E-04	3.30E-04	0 00E+00	0 00E+00	3.15E+07	0 00E+00
									Crud						
Co-60	6 50E+01	100 0%	1.00E+00	68	5.99E+06	1.12E-05	1.87E-12	0.15	1.24E-09	1.60E-04	3 30E-04	4.76E-09	1.76E+01	3.15E+07	3.63E-02
									Volatiles						
SR 90	2.24E+04	2.5%	1.00E+00	68	5 99E+06	1.12E-05	1.87E-12	2.00E-04	1.42E-11	1 60E-04	3 30E-04	2 64E-09	9.77E+00	3.15E+07	2.31E-04
RU106	4 71E+03	2.5%	1.00E+00	68	5 99E+06	1.12E-05	1.87E-12	2 00E-04	2 99E-12	1.60E-04	3.30E-04	1.38E-08	5.11E+01	3.15E+07	2.54E-04
CS134	1.18E+04	2.5%	1 00E+00	68	5.99E+06	1.12E-05	1.87E-12	2.00E-04	7.50E-12	1.60E-04	3.30E-04	1.30E-08	4.81E+01	3.15E+07	6.00E-04
CS137	3 35E+04	2.5%	1.00E+00	68	5 99E+06	1.12E-05	1.87E-12	2.00E-04	2.13E-11	1.60E-04	3.30E-04	8.76E-09	3.24E+01	3.15E+07	1.15E-03
									Fines						
PU241	2.58E+04	2 5%	1.00E-01	68	5 99E+06	1.12E-05	1.87E-12	3.00E-05	2.46E-13	1 60E-04	3.30E-04	6 82E-07	2.52E+03	3.15E+07	1.03E-03
Y 90	2 24E+04	2.5%	1.00E-01	68	5 99E+06	1.12E-05	1.87E-12	3.00E-05	2.14E-13	1 60E-04	3 30E-04	9 52E-12	3 52E-02	3.15E+07	1.25E-08
PM147	9 63E+03	2.5%	1.00E-01	68	5 99E+06	1.12E-05	1.87E-12	3 00E-05	9.18E-14	1 60E-04	3.30E-04	1 88E-14	6.96E-05	3.15E+07	1.06E-11
CE144	2.48E+03	2.5%	1 00E-01	68	5 99E+06	1.12E-05	1.87E-12	3 00E-05	2 36E-14	1.60E-04	3.30E-04	1.93E-09	7.14E+00	3.15E+07	2 81E-07
PR144	2 48E+03	2 5%	1.00E-01	68	5 99E+06	1.12E-05	1.87E-12	3 00E-05	2.36E-14	1 60E-04	3.30E-04	2 41E-15	8 92E-06	3.15E+07	3.51E-13
EU154	1.74E+03	2.5%	1 00E-01	68	5 99E+06	1 12E-05	1.87E-12	3 00E-05	1.66E-14	1.60E-04	3 30E-04	1.17E-08	4 33E+01	3.15E+07	1.19E-06
CM244	2.38E+03	2.5%	1.00E-01	68	5 99E+06	1.12E-05	1.87E-12	3 00E-05	2 27E-14	1.60E-04	3.30E-04	1.59E-05	5.88E+04	3.15E+07	2.22E-03
PU238	1.58E+03	2 5%	1 00E-01	68	5.99E+06	1.12E-05	1.87E-12	3 00E-05	1.51E-14	1.60E-04	3 30E-04	2.80E-05	1.04E+05	3.15E+07	2 60E-03
SB125	7.91E+02	2 5%	1 00E-01	68	5 99E+06	1.12E-05	1.87E-12	3.00E-05	7.54E-15	1.60E-04	3.30E-04	3 60E-10	1.33E+00	3.15E+07	1.67E-08
EU155	5 41E+02	2 5%	1.00E-01	68	5.99E+06	1.12E-05	1.87E-12	3 00E-05	5.16E-15	1 60E-04	3.30E-04	3.56E-10	1.32E+00	3.15E+07	1.13E-08
AM241	2.78E+02	2.5%	1 00E-01	68	5.99E+06	1.12E-05	1.87E-12	3 00E-05	2.65E-15	1.60E-04	3.30E-04	3.25E-05	1.20E+05	3.15E+07	5.30E-04
TE125M	1.93E+02	2.5%	1 00E-01	68	5.99E+06	1.12E-05	1 87E-12	3.00E-05	1 84E-15	1 60E-04	3 30E-04	1.24E-10	4.59E-01	3.15E+07	1.41E-09
PU240	1 50E+02	2.5%	1 00E-01	68	5 99E+06	1.12E-05	1 87E-12	3 00E-05	1.43E-15	1.60E-04	3 30E-04	3.18E-05	1.18E+05	3.15E+07	2 80E-04
SM151	9.76E+01	2.5%	1 00E-01	68	5 99E+06	1.12E-05	1.87E-12	3 00E-05	9.31E-16	1.60E-04	3.30E-04	4.03E-14	1.49E-04	3.15E+07	2.31E-13
PU239	6 70E+01	2 5%	1 00E-01	68	5 99E+06	1.12E-05	1.87E-12	3 00E-05	6 39E-16	1 60E-04	3 30E-04	3.18E-05	1.18E+05	3.15E+07	1.25E-04
BA137M	3.17E+04	2 5%	1 00E-01	68	5 99E+06	1.12E-05	1 87E-12	3.00E-05	3.02E-13	1.60E-04	3.30E-04	0 00E+00	0.00E+00	3.15E+07	0 00E+00
RH106	4 71E+03	2 5%	1.00E-01	68	5 99E+06	1.12E-05	1.87E-12	3.00E-05	4 49E-14	1 60E-04	3.30E-04	0.00E+00	0 00E+00	3.15E+07	0 00E+00
PR144M	3 48E+01	2 5%	1.00E-01	68	5 99E+06	1.12E-05	1.87E-12	3 00E-05	3.32E-16	1.60E-04	3.30E-04	0 00E+00	0 00E+00	3.15E+07	0.00E+00
AM243	1.36E+01	2.5%	1 00E-01	68	5.99E+06	1.12E-05	1.87E-12	3 00E-05	1.30E-16	1.60E-04	3.30E-04	3.26E-05	1.21E+05	3.15E+07	2 60E-05
CM242	9 82E+00	2 5%	1.00E-01	68	5 99E+06	1.12E-05	1.87E-12	3.00E-05	9 36E-17	1 60E-04	3.30E-04	5.70E-07	2.11E+03	3.15E+07	3.28E-07
CM243	9.79E+00	2.5%	1 00E-01	68	5.99E+06	1.12E-05	1 87E-12	3.00E-05	9.34E-17	1.60E-04	3.30E-04	2.07E-05	7.66E+04	3.15E+07	1 19E-05
NP239	1 36E+01	2 5%	1.00E-01	68	5 99E+06	1.12E-05	1.87E-12	3 00E-05	1 30E-16	1 60E-04	3.30E-04	7.45E-11	2.76E-01	3.15E+07	5.95E-11
NP237	1.18E-01	2.5%	1 00E-01	68	5.99E+06	1.12E-05	1 87E-12	3 00E-05	1.13E-18	1 60E-04	3.30E-04	2 96E-05	1.10E+05	3 15E+07	2 05E-07
PU242	9 04E-01	2 5%	1.00E-01	68	5 99E+06	1.12E-05	1.87E-12	3 00E-05	8 62E-18	1.60E-04	3.30E-04	3.02E-05	1.12E+05	3.15E+07	1.60E-06
AM242	2.71E+00	2.5%	1 00E-01	68	5 99E+06	1.12E-05	1 87E-12	3 00E-05	2 58E-17	1.60E-04	3.30E-04	1.94E-09	7.18E+00	3.15E+07	3.09E-10
AM242M	2.72E+00	2.5%	1 00E-01	68	5.99E+06	1.12E-05	1 87E-12	3 00E-05	2.59E-17	1.60E-04	3 30E-04	3 21E-05	1.19E+05	3.15E+07	5 12E-06
														Total	4.54E-02

MPC-68															
Normal Conditions															
Committed Effective Dose Equivalent From Inhalation															
Nuclide	Inventory (Ci/Assy)	% available for release	% remain airborne	No. Assy	MPC Vol (cm3)	L_{nor} Rate at Upstream (cm3/s)	Fraction Released per sec	Release Fraction	Release Rate (Ci/sec)	X/Q (sec/m3)	Breathing Rate (m3/sec)	DCF (Sv/Bq)	DCF (mRem/uCi)	Occ Time (sec)	CDE (mRem)
									Gases						
H 3	1.24E+02	2 5%	1 00E+00	68	5 99E+06	1.12E-05	1 87E-12	0.30	1 18E-10	1.60E-04	3 30E-04	1.73E-11	6.40E-02	3 15E+07	1.26E-05
I129	1 12E-02	2.5%	1 00E+00	68	5 99E+06	1.12E-05	1 87E-12	0.30	1 07E-14	1.60E-04	3 30E-04	2.09E-10	7.73E-01	3 15E+07	1 37E-08
KR 85	2.04E+03	2 5%	1.00E+00	68	5.99E+06	1.12E-05	1.87E-12	0 30	1.95E-09	1 60E-04	3.30E-04	0 00E+00	0 00E+00	3.15E+07	0 00E+00
									Crud						
Co-60	6 50E+01	100 0%	1.00E+00	68	5 99E+06	1.12E-05	1.87E-12	0.15	1 24E-09	1.60E-04	3.30E-04	1 84E-08	6.81E+01	3.15E+07	1.40E-01
									Volatiles						
SR 90	2 24E+04	2 5%	1 00E+00	68	5.99E+06	1.12E-05	1 87E-12	2 00E-04	1 42E-11	1.60E-04	3 30E-04	2 64E-09	9.77E+00	3.15E+07	2.31E-04
RU106	4.71E+03	2.5%	1.00E+00	68	5 99E+06	1.12E-05	1 87E-12	2 00E-04	2 99E-12	1.60E-04	3 30E-04	1.37E-08	5.07E+01	3.15E+07	2.52E-04
CS134	1.18E+04	2.5%	1.00E+00	68	5.99E+06	1.12E-05	1.87E-12	2 00E-04	7.50E-12	1.60E-04	3.30E-04	1.08E-08	4.00E+01	3 15E+07	4.99E-04
CS137	3 35E+04	2.5%	1.00E+00	68	5 99E+06	1.12E-05	1.87E-12	2 00E-04	2 13E-11	1.60E-04	3.30E-04	7.84E-09	2.90E+01	3.15E+07	1.03E-03
									Fines						
PU241	2 58E+04	2.5%	1.00E-01	68	5.99E+06	1.12E-05	1 87E-12	3 00E-05	2.46E-13	1 60E-04	3.30E-04	3 06E-11	1.13E-01	3.15E+07	4.63E-08
Y 90	2 24E+04	2.5%	1.00E-01	68	5 99E+06	1.12E-05	1 87E-12	3 00E-05	2.14E-13	1.60E-04	3.30E-04	9 52E-12	3.52E-02	3.15E+07	1 25E-08
PM147	9 63E+03	2 5%	1 00E-01	68	5 99E+06	1.12E-05	1 87E-12	3 00E-05	9.18E-14	1 60E-04	3.30E-04	3.60E-14	1.33E-04	3.15E+07	2.03E-11
CE144	2 48E+03	2.5%	1 00E-01	68	5 99E+06	1.12E-05	1 87E-12	3 00E-05	2 36E-14	1 60E-04	3 30E-04	1 97E-09	7.29E+00	3.15E+07	2 87E-07
PR144	2 48E+03	2 5%	1 00E-01	68	5.99E+06	1.12E-05	1.87E-12	3 00E-05	2.36E-14	1 60E-04	3 30E-04	1 05E-14	3.89E-05	3.15E+07	1.53E-12
EU154	1.74E+03	2 5%	1 00E-01	68	5 99E+06	1.12E-05	1 87E-12	3 00E-05	1 66E-14	1 60E-04	3 30E-04	1.55E-08	5.74E+01	3.15E+07	1 58E-06
CM244	2.38E+03	2 5%	1.00E-01	68	5 99E+06	1.12E-05	1 87E-12	3 00E-05	2 27E-14	1.60E-04	3.30E-04	1 04E-09	3.85E+00	3 15E+07	1.45E-07
PU238	1 58E+03	2 5%	1 00E-01	68	5 99E+06	1.12E-05	1 87E-12	3.00E-05	1.51E-14	1.60E-04	3 30E-04	1.00E-09	3.70E+00	3 15E+07	9.27E-08
SB125	7 91E+02	2 5%	1.00E-01	68	5.99E+06	1.12E-05	1.87E-12	3.00E-05	7.54E-15	1 60E-04	3.30E-04	4.16E-10	1.54E+00	3.15E+07	1.93E-08
EU155	5 41E+02	2 5%	1 00E-01	68	5 99E+06	1.12E-05	1.87E-12	3.00E-05	5.16E-15	1.60E-04	3 30E-04	6.14E-10	2.27E+00	3.15E+07	1.95E-08
AM241	2.78E+02	2.5%	1 00E-01	68	5 99E+06	1.12E-05	1 87E-12	3 00E-05	2.65E-15	1.60E-04	3.30E-04	2.67E-09	9 88E+00	3 15E+07	4 36E-08
TE125M	1 93E+02	2 5%	1.00E-01	68	5.99E+06	1.12E-05	1 87E-12	3 00E-05	1 84E-15	1 60E-04	3.30E-04	1 07E-10	3.96E-01	3 15E+07	1 21E-09
PU240	1.50E+02	2.5%	1.00E-01	68	5 99E+06	1.12E-05	1 87E-12	3 00E-05	1 43E-15	1 60E-04	3 30E-04	9.51E-10	3.52E+00	3 15E+07	8.37E-09
SM151	9 76E+01	2.5%	1 00E-01	68	5 99E+06	1.12E-05	1.87E-12	3 00E-05	9.31E-16	1 60E-04	3.30E-04	1.49E-13	5 51E-04	3 15E+07	8 53E-13
PU239	6.70E+01	2 5%	1.00E-01	68	5 99E+06	1.12E-05	1.87E-12	3 00E-05	6 39E-16	1.60E-04	3 30E-04	9 22E-10	3 41E+00	3.15E+07	3.63E-09
BA137M	3 17E+04	2.5%	1 00E-01	68	5 99E+06	1.12E-05	1.87E-12	3 00E-05	3 02E-13	1 60E-04	3.30E-04	0.00E+00	0.00E+00	3.15E+07	0.00E+00
RH106	4 71E+03	2.5%	1 00E-01	68	5.99E+06	1.12E-05	1.87E-12	3.00E-05	4.49E-14	1 60E-04	3 30E-04	0.00E+00	0 00E+00	3.15E+07	0 00E+00
PR144M	3 48E+01	2 5%	1.00E-01	68	5 99E+06	1.12E-05	1 87E-12	3.00E-05	3 32E-16	1.60E-04	3 30E-04	0.00E+00	0 00E+00	3.15E+07	0 00E+00
AM243	1.36E+01	2 5%	1.00E-01	68	5.99E+06	1.12E-05	1.87E-12	3.00E-05	1.30E-16	1 60E-04	3.30E-04	1 52E-08	5.62E+01	3 15E+07	1.21E-08
CM242	9 82E+00	2.5%	1 00E-01	68	5.99E+06	1.12E-05	1 87E-12	3 00E-05	9 36E-17	1.60E-04	3 30E-04	9.44E-10	3 49E+00	3.15E+07	5 44E-10
CM243	9.79E+00	2 5%	1 00E-01	68	5 99E+06	1 12E-05	1.87E-12	3 00E-05	9 34E-17	1.60E-04	3 30E-04	6.29E-09	2.33E+01	3.15E+07	3 61E-09
NP239	1 36E+01	2.5%	1.00E-01	68	5 99E+06	1.12E-05	1 87E-12	3 00E-05	1.30E-16	1 60E-04	3.30E-04	1 63E-11	6.03E-02	3 15E+07	1 30E-11
NP237	1 18E-01	2.5%	1 00E-01	68	5.99E+06	1 12E-05	1.87E-12	3 00E-05	1.13E-18	1.60E-04	3 30E-04	1.69E-08	6.25E+01	3.15E+07	1.17E-10
PU242	9 04E-01	2 5%	1.00E-01	68	5 99E+06	1.12E-05	1 87E-12	3 00E-05	8 62E-18	1 60E-04	3.30E-04	9 45E-10	3.50E+00	3.15E+07	5.01E-11
AM242	2 71E+00	2.5%	1.00E-01	68	5.99E+06	1.12E-05	1 87E-12	3 00E-05	2 58E-17	1.60E-04	3 30E-04	2 94E-12	1.09E-02	3 15E+07	4 68E-13
AM242M	2 72E+00	2 5%	1 00E-01	68	5 99E+06	1.12E-05	1 87E-12	3 00E-05	2.59E-17	1 60E-04	3 30E-04	1.38E-09	5 11E+00	3.15E+07	2 20E-10
														Total	1 42E-01

MPC-68															
Normal Conditions															
Committed Effective Dose Equivalent From Inhalation															
Nuclide	Inventory (Ci/Assy)	% available for release	% remain airborne	No. Assy	MPC Vol (cm3)	L_{nor} Rate at Upstream (cm3/s)	Fraction Released per sec	Release Fraction	Release Rate (Ci/sec)	X/Q (sec/m3)	Breathing Rate (m3/sec)	DCF (Sv/Bq)	DCF (mRem/uCi)	Occ Time (sec)	CDE (mRem)
									Gases						
H 3	1.24E+02	2.5%	1 00E+00	68	5.99E+06	1.12E-05	1 87E-12	0 30	1.18E-10	1.60E-04	3.30E-04	1.73E-11	6.40E-02	3.15E+07	1.26E-05
I129	1.12E-02	2.5%	1 00E+00	68	5.99E+06	1.12E-05	1 87E-12	0.30	1.07E-14	1.60E-04	3.30E-04	3.14E-10	1.16E+00	3.15E+07	2.06E-08
KR 85	2 04E+03	2.5%	1.00E+00	68	5.99E+06	1.12E-05	1.87E-12	0.30	1.95E-09	1.60E-04	3 30E-04	0 00E+00	0.00E+00	3.15E+07	0.00E+00
									Crud						
Co-60	6 50E+01	100 0%	1 00E+00	68	5.99E+06	1.12E-05	1.87E-12	0.15	1.24E-09	1.60E-04	3.30E-04	3 45E-07	1 28E+03	3.15E+07	2 63E+00
									Volatiles						
SR 90	2 24E+04	2.5%	1.00E+00	68	5 99E+06	1.12E-05	1.87E-12	2.00E-04	1.42E-11	1 60E-04	3 30E-04	2 86E-06	1 06E+04	3.15E+07	2 51E-01
RU106	4.71E+03	2.5%	1 00E+00	68	5.99E+06	1.12E-05	1 87E-12	2.00E-04	2.99E-12	1 60E-04	3.30E-04	1.04E-06	3 85E+03	3.15E+07	1.92E-02
CS134	1.18E+04	2 5%	1.00E+00	68	5 99E+06	1.12E-05	1 87E-12	2.00E-04	7.50E-12	1 60E-04	3 30E-04	1.18E-08	4.37E+01	3.15E+07	5.45E-04
CS137	3 35E+04	2.5%	1 00E+00	68	5 99E+06	1.12E-05	1.87E-12	2.00E-04	2.13E-11	1 60E-04	3.30E-04	8 82E-09	3.26E+01	3.15E+07	1.16E-03
									Fines						
PU241	2 58E+04	2.5%	1 00E-01	68	5.99E+06	1.12E-05	1.87E-12	3 00E-05	2.46E-13	1.60E-04	3.30E-04	3.18E-06	1.18E+04	3.15E+07	4 81E-03
Y 90	2 24E+04	2.5%	1.00E-01	68	5 99E+06	1.12E-05	1.87E-12	3.00E-05	2.14E-13	1 60E-04	3 30E-04	9 31E-09	3 44E+01	3.15E+07	1.22E-05
PM147	9 63E+03	2.5%	1 00E-01	68	5 99E+06	1.12E-05	1.87E-12	3 00E-05	9.18E-14	1 60E-04	3.30E-04	7.74E-08	2.86E+02	3.15E+07	4 37E-05
CE144	2 48E+03	2.5%	1.00E-01	68	5 99E+06	1.12E-05	1.87E-12	3.00E-05	2 36E-14	1.60E-04	3 30E-04	7.91E-07	2 93E+03	3.15E+07	1.15E-04
PR144	2.48E+03	2 5%	1.00E-01	68	5 99E+06	1 12E-05	1 87E-12	3 00E-05	2.36E-14	1.60E-04	3.30E-04	9 40E-11	3.48E-01	3.15E+07	1.37E-08
EU154	1 74E+03	2.5%	1.00E-01	68	5 99E+06	1.12E-05	1.87E-12	3.00E-05	1.66E-14	1 60E-04	3 30E-04	7 92E-08	2 93E+02	3.15E+07	8 09E-06
CM244	2.38E+03	2.5%	1.00E-01	68	5 99E+06	1.12E-05	1.87E-12	3 00E-05	2.27E-14	1.60E-04	3.30E-04	1.93E-05	7.14E+04	3.15E+07	2.70E-03
PU238	1 58E+03	2.5%	1 00E-01	68	5 99E+06	1.12E-05	1 87E-12	3.00E-05	1.51E-14	1.60E-04	3 30E-04	3 20E-04	1.18E+06	3.15E+07	2 97E-02
SB125	7 91E+02	2 5%	1.00E-01	68	5 99E+06	1.12E-05	1 87E-12	3.00E-05	7.54E-15	1 60E-04	3.30E-04	2.17E-08	8 03E+01	3.15E+07	1 01E-06
EU155	5 41E+02	2 5%	1.00E-01	68	5.99E+06	1.12E-05	1.87E-12	3 00E-05	5.16E-15	1 60E-04	3 30E-04	1.19E-08	4 40E+01	3 15E+07	3 78E-07
AM241	2 78E+02	2 5%	1.00E-01	68	5 99E+06	1.12E-05	1 87E-12	3 00E-05	2 65E-15	1.60E-04	3.30E-04	1.84E-05	6 81E+04	3.15E+07	3 00E-04
TE125M	1 93E+02	2.5%	1 00E-01	68	5 99E+06	1.12E-05	1.87E-12	3.00E-05	1.84E-15	1 60E-04	3.30E-04	1.04E-08	3 85E+01	3.15E+07	1.18E-07
PU240	1 50E+02	2.5%	1.00E-01	68	5 99E+06	1.12E-05	1 87E-12	3 00E-05	1.43E-15	1 60E-04	3.30E-04	3 23E-04	1.20E+06	3.15E+07	2 84E-03
SM151	9.76E+01	2.5%	1 00E-01	68	5.99E+06	1.12E-05	1 87E-12	3.00E-05	9.31E-16	1.60E-04	3.30E-04	3.26E-09	1.21E+01	3.15E+07	1 87E-08
PU239	6.70E+01	2.5%	1 00E-01	68	5 99E+06	1.12E-05	1 87E-12	3 00E-05	6.39E-16	1 60E-04	3 30E-04	3 23E-04	1 20E+06	3 15E+07	1.27E-03
BA137M	3.17E+04	2.5%	1 00E-01	68	5.99E+06	1.12E-05	1.87E-12	3 00E-05	3 02E-13	1.60E-04	3.30E-04	0 00E+00	0 00E+00	3.15E+07	0 00E+00
RH106	4.71E+03	2 5%	1.00E-01	68	5 99E+06	1.12E-05	1.87E-12	3 00E-05	4 49E-14	1 60E-04	3.30E-04	0.00E+00	0 00E+00	3.15E+07	0 00E+00
PR144M	3.48E+01	2.5%	1 00E-01	68	5 99E+06	1.12E-05	1.87E-12	3 00E-05	3 32E-16	1 60E-04	3.30E-04	0.00E+00	0.00E+00	3 15E+07	0 00E+00
AM243	1.36E+01	2.5%	1 00E-01	68	5 99E+06	1.12E-05	1.87E-12	3.00E-05	1.30E-16	1 60E-04	3 30E-04	1.78E-05	6 59E+04	3.15E+07	1.42E-05
CM242	9 82E+00	2.5%	1.00E-01	68	5.99E+06	1.12E-05	1.87E-12	3.00E-05	9.36E-17	1.60E-04	3 30E-04	1.55E-05	5.74E+04	3.15E+07	8.93E-06
CM243	9.79E+00	2.5%	1 00E-01	68	5 99E+06	1.12E-05	1 87E-12	3 00E-05	9 34E-17	1.60E-04	3.30E-04	1 94E-05	7.18E+04	3 15E+07	1.11E-05
NP239	1 36E+01	2.5%	1 00E-01	68	5.99E+06	1.12E-05	1 87E-12	3 00E-05	1.30E-16	1 60E-04	3 30E-04	2 36E-09	8.73E+00	3.15E+07	1.88E-09
NP237	1.18E-01	2.5%	1.00E-01	68	5.99E+06	1.12E-05	1.87E-12	3.00E-05	1.13E-18	1 60E-04	3.30E-04	1.61E-05	5.96E+04	3.15E+07	1.11E-07
PU242	9 04E-01	2.5%	1 00E-01	68	5 99E+06	1.12E-05	1.87E-12	3 00E-05	8 62E-18	1 60E-04	3.30E-04	3 07E-04	1.14E+06	3.15E+07	1 63E-05
AM242	2 71E+00	2.5%	1.00E-01	68	5.99E+06	1.12E-05	1 87E-12	3 00E-05	2.58E-17	1.60E-04	3 30E-04	5 20E-08	1.92E+02	3.15E+07	8 27E-09
AM242M	2.72E+00	2.5%	1 00E-01	68	5 99E+06	1.12E-05	1.87E-12	3 00E-05	2 59E-17	1 60E-04	3.30E-04	4.20E-06	1.55E+04	3.15E+07	6.70E-07
														Total	2.95E+00

MPC-68															
Normal Conditions															
Committed Effective Dose Equivalent From Inhalation															
Nuclide	Inventory (Ci/Assy)	% available for release	% remain airborne	No. Assy	MPC Vol (cm3)	L_{nor} Rate at Upstream (cm3/s)	Fraction Released per sec	Release Fraction	Release Rate (Ci/sec)	X/Q (sec/m3)	Breathing Rate (m3/sec)	DCF (Sv/Bq)	DCF (mRem/uCi)	Occ Time (sec)	CDE (mRem)
									Gases						
H 3	1 24E+02	2 5%	1 00E+00	68	5 99E+06	1.12E-05	1.87E-12	0 30	1.18E-10	1.60E-04	3 30E-04	1.73E-11	6 40E-02	3.15E+07	1.26E-05
I129	1.12E-02	2 5%	1.00E+00	68	5.99E+06	1.12E-05	1.87E-12	0 30	1 07E-14	1.60E-04	3 30E-04	1.40E-10	5.18E-01	3.15E+07	9.20E-09
KR 85	2 04E+03	2.5%	1.00E+00	68	5 99E+06	1.12E-05	1.87E-12	0 30	1.95E-09	1.60E-04	3 30E-04	0.00E+00	0 00E+00	3.15E+07	0.00E+00
									Crud						
Co-60	6 50E+01	100 0%	1.00E+00	68	5 99E+06	1.12E-05	1 87E-12	0 15	1.24E-09	1 60E-04	3.30E-04	1.72E-08	6 36E+01	3.15E+07	1.31E-01
									Volatiles						
SR 90	2.24E+04	2 5%	1.00E+00	68	5 99E+06	1.12E-05	1 87E-12	2.00E-04	1.42E-11	1 60E-04	3.30E-04	3.36E-07	1 24E+03	3.15E+07	2 94E-02
RU106	4.71E+03	2 5%	1.00E+00	68	5 99E+06	1.12E-05	1 87E-12	2.00E-04	2.99E-12	1.60E-04	3 30E-04	1 37E-08	5 07E+01	3.15E+07	2 52E-04
CS134	1.18E+04	2 5%	1.00E+00	68	5.99E+06	1 12E-05	1.87E-12	2.00E-04	7.50E-12	1.60E-04	3.30E-04	1.18E-08	4.37E+01	3.15E+07	5 45E-04
CS137	3 35E+04	2 5%	1.00E+00	68	5.99E+06	1.12E-05	1 87E-12	2 00E-04	2.13E-11	1 60E-04	3.30E-04	8 30E-09	3 07E+01	3.15E+07	1 09E-03
									Fines						
PU241	2 58E+04	2.5%	1 00E-01	68	5 99E+06	1.12E-05	1 87E-12	3 00E-05	2.46E-13	1.60E-04	3 30E-04	3.36E-06	1 24E+04	3.15E+07	5.09E-03
Y 90	2 24E+04	2 5%	1.00E-01	68	5 99E+06	1.12E-05	1.87E-12	3.00E-05	2 14E-13	1.60E-04	3 30E-04	2 79E-10	1.03E+00	3 15E+07	3 67E-07
PM147	9.63E+03	2 5%	1 00E-01	68	5.99E+06	1.12E-05	1 87E-12	3.00E-05	9.18E-14	1 60E-04	3 30E-04	8 16E-09	3.02E+01	3 15E+07	4.61E-06
CE144	2.48E+03	2 5%	1 00E-01	68	5 99E+06	1.12E-05	1.87E-12	3 00E-05	2.36E-14	1 60E-04	3 30E-04	2.67E-08	9 88E+01	3.15E+07	3 89E-06
PR144	2.48E+03	2 5%	1.00E-01	68	5 99E+06	1.12E-05	1 87E-12	3.00E-05	2 36E-14	1.60E-04	3.30E-04	8.08E-14	2.99E-04	3.15E+07	1.18E-11
EU154	1 74E+03	2 5%	1 00E-01	68	5 99E+06	1.12E-05	1.87E-12	3 00E-05	1 66E-14	1.60E-04	3 30E-04	1.06E-07	3 92E+02	3.15E+07	1 08E-05
CM244	2 38E+03	2 5%	1 00E-01	68	5 99E+06	1.12E-05	1.87E-12	3 00E-05	2 27E-14	1 60E-04	3.30E-04	9.38E-05	3 47E+05	3.15E+07	1.31E-02
PU238	1 58E+03	2 5%	1 00E-01	68	5 99E+06	1.12E-05	1 87E-12	3.00E-05	1.51E-14	1.60E-04	3.30E-04	1 52E-04	5.62E+05	3.15E+07	1 41E-02
SB125	7 91E+02	2 5%	1.00E-01	68	5 99E+06	1.12E-05	1.87E-12	3 00E-05	7.54E-15	1.60E-04	3.30E-04	6 49E-10	2.40E+00	3.15E+07	3 01E-08
EU155	5.41E+02	2.5%	1.00E-01	68	5 99E+06	1.12E-05	1.87E-12	3.00E-05	5 16E-15	1.60E-04	3.30E-04	1.43E-08	5 29E+01	3.15E+07	4.54E-07
AM241	2.78E+02	2 5%	1.00E-01	68	5.99E+06	1 12E-05	1.87E-12	3 00E-05	2.65E-15	1.60E-04	3.30E-04	1.74E-04	6.44E+05	3.15E+07	2 84E-03
TE125M	1.93E+02	2.5%	1 00E-01	68	5.99E+06	1.12E-05	1.87E-12	3.00E-05	1.84E-15	1 60E-04	3.30E-04	3 01E-09	1.11E+01	3.15E+07	3 42E-08
PU240	1.50E+02	2 5%	1.00E-01	68	5 99E+06	1.12E-05	1 87E-12	3 00E-05	1 43E-15	1.60E-04	3.30E-04	1 69E-04	6.25E+05	3.15E+07	1.49E-03
SM151	9 76E+01	2.5%	1.00E-01	68	5 99E+06	1.12E-05	1 87E-12	3 00E-05	9.31E-16	1.60E-04	3 30E-04	1.10E-08	4 07E+01	3.15E+07	6 30E-08
PU239	6 70E+01	2 5%	1.00E-01	68	5.99E+06	1 12E-05	1.87E-12	3.00E-05	6 39E-16	1 60E-04	3.30E-04	1 69E-04	6.25E+05	3 15E+07	6.64E-04
BA137M	3.17E+04	2 5%	1 00E-01	68	5 99E+06	1.12E-05	1 87E-12	3.00E-05	3 02E-13	1.60E-04	3 30E-04	0 00E+00	0 00E+00	3.15E+07	0 00E+00
RH106	4.71E+03	2 5%	1 00E-01	68	5 99E+06	1 12E-05	1.87E-12	3 00E-05	4.49E-14	1.60E-04	3 30E-04	0 00E+00	0 00E+00	3.15E+07	0.00E+00
PR144M	3 48E+01	2.5%	1 00E-01	68	5 99E+06	1 12E-05	1.87E-12	3 00E-05	3 32E-16	1 60E-04	3.30E-04	0 00E+00	0 00E+00	3 15E+07	0.00E+00
AM243	1.36E+01	2 5%	1.00E-01	68	5 99E+06	1.12E-05	1 87E-12	3 00E-05	1 30E-16	1.60E-04	3 30E-04	1 73E-04	6 40E+05	3.15E+07	1 38E-04
CM242	9 82E+00	2 5%	1.00E-01	68	5 99E+06	1.12E-05	1 87E-12	3.00E-05	9 36E-17	1.60E-04	3 30E-04	3.90E-06	1 44E+04	3.15E+07	2 25E-06
CM243	9 79E+00	2.5%	1.00E-01	68	5.99E+06	1 12E-05	1 87E-12	3.00E-05	9 34E-17	1.60E-04	3 30E-04	1.18E-04	4 37E+05	3.15E+07	6 78E-05
NP239	1 36E+01	2 5%	1.00E-01	68	5 99E+06	1.12E-05	1 87E-12	3.00E-05	1.30E-16	1 60E-04	3.30E-04	2.08E-10	7.70E-01	3.15E+07	1 66E-10
NP237	1 18E-01	2 5%	1.00E-01	68	5 99E+06	1.12E-05	1.87E-12	3.00E-05	1.13E-18	1 60E-04	3 30E-04	2 62E-04	9 69E+05	3.15E+07	1 81E-06
PU242	9.04E-01	2.5%	1 00E-01	68	5 99E+06	1.12E-05	1.87E-12	3 00E-05	8 62E-18	1.60E-04	3 30E-04	1.61E-04	5 96E+05	3.15E+07	8.54E-06
AM242	2 71E+00	2 5%	1.00E-01	68	5 99E+06	1.12E-05	1.87E-12	3 00E-05	2 58E-17	1 60E-04	3 30E-04	1 32E-08	4.88E+01	3.15E+07	2 10E-09
AM242M	2 72E+00	2.5%	1.00E-01	68	5 99E+06	1.12E-05	1 87E-12	3 00E-05	2.59E-17	1.60E-04	3.30E-04	1.69E-04	6 25E+05	3.15E+07	2.70E-05
														Total	2 00E-01

MPC-68															
Normal Conditions															
Committed Effective Dose Equivalent From Inhalation															
Nuclide	Inventory (Ci/Assy)	% available for release	% remain airborne	No. Assy	MPC Vol (cm3)	L_{nor} Rate at Upstream (cm3/s)	Fraction Released per sec	Release Fraction	Release Rate (Ci/sec)	X/Q (sec/m3)	Breathing Rate (m3/sec)	DCF (Sv/Bq)	DCF (mRem/uCi)	Occ Time (sec)	CDE (mRem)
									Gases						
H 3	1 24E+02	2 5%	1.00E+00	68	5.99E+06	1.12E-05	1.87E-12	0 30	1.18E-10	1 60E-04	3.30E-04	1.73E-11	6 40E-02	3 15E+07	1.26E-05
I129	1 12E-02	2 5%	1.00E+00	68	5 99E+06	1.12E-05	1 87E-12	0 30	1.07E-14	1.60E-04	3.30E-04	1.38E-10	5 11E-01	3.15E+07	9 07E-09
KR 85	2 04E+03	2.5%	1.00E+00	68	5.99E+06	1.12E-05	1.87E-12	0.30	1.95E-09	1 60E-04	3.30E-04	0.00E+00	0 00E+00	3.15E+07	0.00E+00
									Crud						
Co-60	6.50E+01	100 0%	1 00E+00	68	5 99E+06	1.12E-05	1.87E-12	0.15	1 24E-09	1.60E-04	3.30E-04	1.35E-08	5 00E+01	3.15E+07	1.03E-01
									Volatiles						
SR 90	2.24E+04	2.5%	1 00E+00	68	5.99E+06	1.12E-05	1.87E-12	2 00E-04	1 42E-11	1.60E-04	3.30E-04	7.27E-07	2.69E+03	3.15E+07	6.37E-02
RU106	4.71E+03	2 5%	1.00E+00	68	5 99E+06	1.12E-05	1.87E-12	2.00E-04	2 99E-12	1 60E-04	3.30E-04	1.37E-08	5.07E+01	3.15E+07	2.52E-04
CS134	1.18E+04	2.5%	1.00E+00	68	5 99E+06	1.12E-05	1 87E-12	2 00E-04	7.50E-12	1.60E-04	3 30E-04	1.10E-08	4.07E+01	3 15E+07	5 08E-04
CS137	3.35E+04	2.5%	1.00E+00	68	5 99E+06	1.12E-05	1.87E-12	2 00E-04	2.13E-11	1.60E-04	3 30E-04	7.94E-09	2.94E+01	3.15E+07	1 04E-03
									Fines						
PU241	2.58E+04	2 5%	1.00E-01	68	5 99E+06	1.12E-05	1.87E-12	3 00E-05	2.46E-13	1.60E-04	3 30E-04	4.20E-05	1.55E+05	3.15E+07	6.36E-02
Y 90	2 24E+04	2.5%	1 00E-01	68	5.99E+06	1.12E-05	1 87E-12	3.00E-05	2.14E-13	1 60E-04	3 30E-04	2.78E-10	1.03E+00	3.15E+07	3 65E-07
PM147	9.63E+03	2 5%	1.00E-01	68	5 99E+06	1.12E-05	1.87E-12	3 00E-05	9.18E-14	1 60E-04	3.30E-04	1 02E-07	3.77E+02	3 15E+07	5.76E-05
CE144	2.48E+03	2.5%	1.00E-01	68	5 99E+06	1.12E-05	1.87E-12	3 00E-05	2 36E-14	1.60E-04	3 30E-04	4.54E-08	1.68E+02	3 15E+07	6 61E-06
PR144	2.48E+03	2 5%	1 00E-01	68	5 99E+06	1.12E-05	1.87E-12	3 00E-05	2.36E-14	1.60E-04	3.30E-04	1.35E-13	5 00E-04	3.15E+07	1 96E-11
EU154	1.74E+03	2 5%	1.00E-01	68	5 99E+06	1.12E-05	1 87E-12	3 00E-05	1.66E-14	1.60E-04	3.30E-04	5 23E-07	1.94E+03	3.15E+07	5.34E-05
CM244	2.38E+03	2.5%	1.00E-01	68	5 99E+06	1.12E-05	1.87E-12	3.00E-05	2 27E-14	1 60E-04	3 30E-04	1.17E-03	4.33E+06	3.15E+07	1 63E-01
PU238	1.58E+03	2 5%	1.00E-01	68	5 99E+06	1.12E-05	1.87E-12	3 00E-05	1.51E-14	1.60E-04	3.30E-04	1.90E-03	7.03E+06	3.15E+07	1.76E-01
SB125	7.91E+02	2.5%	1.00E-01	68	5 99E+06	1.12E-05	1 87E-12	3.00E-05	7.54E-15	1.60E-04	3 30E-04	2.73E-09	1.01E+01	3.15E+07	1 27E-07
EU155	5 41E+02	2.5%	1 00E-01	68	5 99E+06	1.12E-05	1.87E-12	3 00E-05	5.16E-15	1.60E-04	3.30E-04	1.52E-07	5 62E+02	3.15E+07	4.83E-06
AM241	2.78E+02	2 5%	1.00E-01	68	5.99E+06	1.12E-05	1.87E-12	3 00E-05	2 65E-15	1.60E-04	3.30E-04	2.17E-03	8.03E+06	3.15E+07	3 54E-02
TE125M	1.93E+02	2 5%	1.00E-01	68	5.99E+06	1.12E-05	1.87E-12	3 00E-05	1.84E-15	1.60E-04	3.30E-04	3 21E-08	1.19E+02	3.15E+07	3.64E-07
PU240	1.50E+02	2.5%	1.00E-01	68	5 99E+06	1.12E-05	1.87E-12	3.00E-05	1.43E-15	1 60E-04	3.30E-04	2.11E-03	7.81E+06	3.15E+07	1.86E-02
SM151	9.76E+01	2.5%	1 00E-01	68	5.99E+06	1.12E-05	1 87E-12	3.00E-05	9.31E-16	1.60E-04	3 30E-04	1.38E-07	5.11E+02	3.15E+07	7.90E-07
PU239	6.70E+01	2 5%	1.00E-01	68	5 99E+06	1.12E-05	1.87E-12	3 00E-05	6 39E-16	1.60E-04	3.30E-04	2.11E-03	7.81E+06	3.15E+07	8.30E-03
BA137M	3 17E+04	2.5%	1.00E-01	68	5.99E+06	1.12E-05	1.87E-12	3.00E-05	3 02E-13	1 60E-04	3.30E-04	0.00E+00	0 00E+00	3.15E+07	0 00E+00
RH106	4.71E+03	2.5%	1 00E-01	68	5.99E+06	1.12E-05	1 87E-12	3.00E-05	4.49E-14	1 60E-04	3.30E-04	0.00E+00	0.00E+00	3.15E+07	0 00E+00
PR144M	3.48E+01	2 5%	1.00E-01	68	5 99E+06	1.12E-05	1 87E-12	3 00E-05	3.32E-16	1 60E-04	3 30E-04	0 00E+00	0.00E+00	3.15E+07	0 00E+00
AM243	1.36E+01	2 5%	1.00E-01	68	5 99E+06	1.12E-05	1.87E-12	3.00E-05	1.30E-16	1.60E-04	3.30E-04	2.17E-03	8 03E+06	3.15E+07	1.73E-03
CM242	9 82E+00	2.5%	1 00E-01	68	5 99E+06	1.12E-05	1.87E-12	3 00E-05	9 36E-17	1.60E-04	3.30E-04	4.87E-05	1.80E+05	3.15E+07	2.81E-05
CM243	9.79E+00	2 5%	1.00E-01	68	5 99E+06	1.12E-05	1.87E-12	3 00E-05	9.34E-17	1.60E-04	3.30E-04	1.47E-03	5 44E+06	3.15E+07	8 45E-04
NP239	1.36E+01	2 5%	1.00E-01	68	5.99E+06	1.12E-05	1.87E-12	3.00E-05	1.30E-16	1.60E-04	3.30E-04	2.03E-09	7.51E+00	3.15E+07	1.62E-09
NP237	1.18E-01	2 5%	1 00E-01	68	5.99E+06	1.12E-05	1.87E-12	3 00E-05	1.13E-18	1.60E-04	3.30E-04	3 27E-03	1 21E+07	3.15E+07	2.26E-05
PU242	9 04E-01	2.5%	1 00E-01	68	5 99E+06	1.12E-05	1.87E-12	3 00E-05	8 62E-18	1.60E-04	3.30E-04	2 01E-03	7.44E+06	3.15E+07	1 07E-04
AM242	2 71E+00	2 5%	1.00E-01	68	5.99E+06	1.12E-05	1.87E-12	3 00E-05	2 58E-17	1 60E-04	3.30E-04	1.65E-07	6 11E+02	3.15E+07	2 62E-08
AM242M	2.72E+00	2.5%	1 00E-01	68	5 99E+06	1.12E-05	1.87E-12	3 00E-05	2 59E-17	1.60E-04	3 30E-04	2.12E-03	7.84E+06	3.15E+07	3.38E-04
														Total	6 37E-01

MPC-68															
Normal Conditions															
Committed Effective Dose Equivalent From Inhalation															
Nuclide	Inventory (Ci/Assy)	% available for release	% remain airborne	No Assy	MPC Vol (cm3)	L_{nor} Rate at Upstream (cm3/s)	Fraction Released per sec	Release Fraction	Release Rate (Ci/sec)	X/Q (sec/m3)	Breathing Rate (m3/sec)	DCF (Sv/Bq)	DCF (mRem/uCi)	Occ Time (sec)	CDE (mRem)
									Gases						
H 3	1.24E+02	2 5%	1.00E+00	68	5.99E+06	1.12E-05	1.87E-12	0.30	1.18E-10	1.60E-04	3.30E-04	1.73E-11	6.40E-02	3.15E+07	1.26E-05
I129	1.12E-02	2.5%	1.00E+00	68	5 99E+06	1.12E-05	1.87E-12	0.30	1.07E-14	1 60E-04	3.30E-04	1.56E-06	5.77E+03	3.15E+07	1.03E-04
KR 85	2 04E+03	2 5%	1.00E+00	68	5.99E+06	1.12E-05	1.87E-12	0.30	1.95E-09	1.60E-04	3.30E-04	0 00E+00	0 00E+00	3.15E+07	0.00E+00
									Crud						
Co-60	6 50E+01	100 0%	1.00E+00	68	5 99E+06	1.12E-05	1.87E-12	0.15	1 24E-09	1 60E-04	3.30E-04	1 62E-08	5.99E+01	3.15E+07	1.24E-01
									Volatiles						
SR 90	2 24E+04	2 5%	1.00E+00	68	5 99E+06	1.12E-05	1.87E-12	2.00E-04	1 42E-11	1.60E-04	3.30E-04	2 64E-09	9.77E+00	3.15E+07	2.31E-04
RU106	4 71E+03	2 5%	1.00E+00	68	5 99E+06	1.12E-05	1.87E-12	2.00E-04	2 99E-12	1.60E-04	3.30E-04	1.37E-08	5 07E+01	3.15E+07	2.52E-04
CS134	1 18E+04	2 5%	1 00E+00	68	5 99E+06	1.12E-05	1.87E-12	2 00E-04	7.50E-12	1 60E-04	3.30E-04	1.11E-08	4.11E+01	3.15E+07	5.12E-04
CS137	3 35E+04	2 5%	1 00E+00	68	5 99E+06	1.12E-05	1.87E-12	2.00E-04	2.13E-11	1 60E-04	3 30E-04	7.93E-09	2.93E+01	3.15E+07	1 04E-03
									Fines						
PU241	2 58E+04	2 5%	1.00E-01	68	5 99E+06	1.12E-05	1.87E-12	3.00E-05	2 46E-13	1 60E-04	3 30E-04	1 24E-11	4 59E-02	3.15E+07	1 88E-08
Y 90	2 24E+04	2.5%	1 00E-01	68	5 99E+06	1.12E-05	1 87E-12	3 00E-05	2.14E-13	1.60E-04	3 30E-04	9.52E-12	3 52E-02	3 15E+07	1 25E-08
PM147	9 63E+03	2.5%	1 00E-01	68	5 99E+06	1.12E-05	1 87E-12	3 00E-05	9.18E-14	1.60E-04	3 30E-04	1 98E-14	7.33E-05	3.15E+07	1.12E-11
CE144	2 48E+03	2 5%	1 00E-01	68	5.99E+06	1.12E-05	1.87E-12	3 00E-05	2.36E-14	1 60E-04	3.30E-04	1 88E-09	6 96E+00	3 15E+07	2.74E-07
PR144	2.48E+03	2 5%	1 00E-01	68	5.99E+06	1 12E-05	1 87E-12	3 00E-05	2.36E-14	1 60E-04	3 30E-04	8 47E-15	3.13E-05	3.15E+07	1.23E-12
EU154	1.74E+03	2 5%	1.00E-01	68	5 99E+06	1 12E-05	1.87E-12	3 00E-05	1 66E-14	1 60E-04	3 30E-04	7 14E-09	2 64E+01	3.15E+07	7.29E-07
CM244	2.38E+03	2 5%	1 00E-01	68	5 99E+06	1.12E-05	1 87E-12	3.00E-05	2.27E-14	1.60E-04	3 30E-04	1 01E-09	3 74E+00	3.15E+07	1.41E-07
PU238	1 58E+03	2.5%	1 00E-01	68	5.99E+06	1.12E-05	1 87E-12	3.00E-05	1.51E-14	1 60E-04	3 30E-04	9.62E-10	3.56E+00	3.15E+07	8 92E-08
SB125	7.91E+02	2 5%	1 00E-01	68	5 99E+06	1.12E-05	1.87E-12	3 00E-05	7 54E-15	1 60E-04	3.30E-04	3 24E-10	1 20E+00	3.15E+07	1.50E-08
EU155	5 41E+02	2 5%	1 00E-01	68	5 99E+06	1.12E-05	1 87E-12	3 00E-05	5.16E-15	1 60E-04	3 30E-04	2.40E-10	8 88E-01	3.15E+07	7.62E-09
AM241	2.78E+02	2 5%	1 00E-01	68	5 99E+06	1 12E-05	1.87E-12	3 00E-05	2 65E-15	1.60E-04	3.30E-04	1 60E-09	5 92E+00	3.15E+07	2 61E-08
TE125M	1.93E+02	2 5%	1.00E-01	68	5.99E+06	1 12E-05	1 87E-12	3 00E-05	1.84E-15	1 60E-04	3 30E-04	9.93E-11	3 67E-01	3.15E+07	1.13E-09
PU240	1.50E+02	2 5%	1 00E-01	68	5 99E+06	1.12E-05	1.87E-12	3 00E-05	1.43E-15	1 60E-04	3.30E-04	9 05E-10	3 35E+00	3.15E+07	7.97E-09
SM151	9 76E+01	2.5%	1 00E-01	68	5.99E+06	1.12E-05	1 87E-12	3 00E-05	9.31E-16	1.60E-04	3 30E-04	1.32E-14	4.88E-05	3 15E+07	7 56E-14
PU239	6.70E+01	2 5%	1 00E-01	68	5.99E+06	1.12E-05	1.87E-12	3 00E-05	6 39E-16	1 60E-04	3.30E-04	9.03E-10	3.34E+00	3.15E+07	3.55E-09
BA137M	3.17E+04	2 5%	1 00E-01	68	5 99E+06	1.12E-05	1.87E-12	3 00E-05	3 02E-13	1.60E-04	3 30E-04	0 00E+00	0 00E+00	3.15E+07	0.00E+00
RH106	4.71E+03	2 5%	1.00E-01	68	5 99E+06	1.12E-05	1.87E-12	3 00E-05	4.49E-14	1 60E-04	3 30E-04	0 00E+00	0 00E+00	3.15E+07	0 00E+00
PR144M	3 48E+01	2.5%	1 00E-01	68	5 99E+06	1.12E-05	1.87E-12	3 00E-05	3 32E-16	1 60E-04	3.30E-04	0 00E+00	0.00E+00	3.15E+07	0 00E+00
AM243	1 36E+01	2 5%	1.00E-01	68	5.99E+06	1.12E-05	1 87E-12	3.00E-05	1 30E-16	1 60E-04	3 30E-04	8.29E-09	3 07E+01	3.15E+07	6 62E-09
CM242	9 82E+00	2.5%	1.00E-01	68	5 99E+06	1 12E-05	1 87E-12	3.00E-05	9.36E-17	1 60E-04	3.30E-04	9.41E-10	3 48E+00	3 15E+07	5 42E-10
CM243	9.79E+00	2 5%	1.00E-01	68	5 99E+06	1.12E-05	1 87E-12	3.00E-05	9 34E-17	1 60E-04	3.30E-04	3 83E-09	1 42E+01	3.15E+07	2 20E-09
NP239	1 36E+01	2 5%	1 00E-01	68	5 99E+06	1.12E-05	1.87E-12	3 00E-05	1.30E-16	1 60E-04	3 30E-04	7.62E-12	2.82E-02	3 15E+07	6 08E-12
NP237	1.18E-01	2 5%	1 00E-01	68	5 99E+06	1.12E-05	1 87E-12	3.00E-05	1.13E-18	1 60E-04	3.30E-04	1 34E-08	4.96E+01	3.15E+07	9 28E-11
PU242	9.04E-01	2 5%	1.00E-01	68	5.99E+06	1.12E-05	1.87E-12	3.00E-05	8 62E-18	1.60E-04	3.30E-04	8 79E-10	3 25E+00	3.15E+07	4 66E-11
AM242	2 71E+00	2 5%	1 00E-01	68	5.99E+06	1.12E-05	1.87E-12	3 00E-05	2 58E-17	1 60E-04	3 30E-04	2.52E-12	9 32E-03	3.15E+07	4.01E-13
AM242M	2.72E+00	2 5%	1 00E-01	68	5 99E+06	1.12E-05	1 87E-12	3.00E-05	2 59E-17	1 60E-04	3.30E-04	5 64E-10	2.09E+00	3 15E+07	9 00E-11
														Total	1 26E-01

MPC-68															
Normal Conditions															
Committed Effective Dose Equivalent From Inhalation															
Nuclide	Inventory (Ci/Assy)	% available for release	% remain airborne	No. Assy	MPC Vol (cm3)	L_{nor} Rate at Upstream (cm3/s)	Fraction Released per sec	Release Fraction	Release Rate (Ci/sec)	X/Q (sec/m3)	Breathing Rate (m3/sec)	DCF (Sv/Bq)	DCF (mRem/uCi)	Occ Time (sec)	CEDE (mRem)
									Gases						
H 3	1 24E+02	2.5%	1 00E+00	68	5 99E+06	1.12E-05	1.87E-12	0.30	1.18E-10	1.60E-04	3.30E-04	1.73E-11	6 40E-02	3.15E+07	1.26E-05
I129	1.12E-02	2.5%	1.00E+00	68	5 99E+06	1.12E-05	1 87E-12	0.30	1.07E-14	1.60E-04	3.30E-04	4.69E-08	1.74E+02	3.15E+07	3 08E-06
KR 85	2 04E+03	2.5%	1 00E+00	68	5 99E+06	1.12E-05	1.87E-12	0.30	1 95E-09	1 60E-04	3 30E-04	0 00E+00	0 00E+00	3.15E+07	0.00E+00
									Crud						
Co-60	6 50E+01	100 0%	1.00E+00	68	5.99E+06	1.12E-05	1.87E-12	0 15	1.24E-09	1 60E-04	3 30E-04	5 91E-08	2.19E+02	3 15E+07	4 51E-01
									Volatiles						
SR 90	2.24E+04	2.5%	1 00E+00	68	5.99E+06	1.12E-05	1.87E-12	2 00E-04	1 42E-11	1 60E-04	3 30E-04	3.51E-07	1.30E+03	3.15E+07	3 08E-02
RU106	4.71E+03	2.5%	1 00E+00	68	5.99E+06	1.12E-05	1 87E-12	2.00E-04	2.99E-12	1.60E-04	3.30E-04	1 29E-07	4.77E+02	3.15E+07	2.38E-03
CS134	1.18E+04	2 5%	1 00E+00	68	5 99E+06	1.12E-05	1.87E-12	2.00E-04	7.50E-12	1 60E-04	3 30E-04	1.25E-08	4 63E+01	3.15E+07	5 77E-04
CS137	3 35E+04	2.5%	1.00E+00	68	5 99E+06	1.12E-05	1 87E-12	2 00E-04	2.13E-11	1.60E-04	3.30E-04	8 63E-09	3.19E+01	3.15E+07	1.13E-03
									Fines						
PU241	2.58E+04	2.5%	1.00E-01	68	5 99E+06	1.12E-05	1.87E-12	3.00E-05	2.46E-13	1.60E-04	3.30E-04	2.23E-06	8 25E+03	3.15E+07	3.38E-03
Y 90	2.24E+04	2.5%	1.00E-01	68	5.99E+06	1.12E-05	1.87E-12	3.00E-05	2.14E-13	1.60E-04	3.30E-04	2.28E-09	8 44E+00	3.15E+07	3.00E-06
PM147	9 63E+03	2.5%	1 00E-01	68	5 99E+06	1.12E-05	1 87E-12	3 00E-05	9.18E-14	1.60E-04	3.30E-04	1.06E-08	3 92E+01	3.15E+07	5 99E-06
CE144	2.48E+03	2 5%	1.00E-01	68	5 99E+06	1.12E-05	1 87E-12	3 00E-05	2.36E-14	1.60E-04	3.30E-04	1.01E-07	3.74E+02	3.15E+07	1.47E-05
PR144	2.48E+03	2.5%	1 00E-01	68	5.99E+06	1.12E-05	1.87E-12	3.00E-05	2.36E-14	1.60E-04	3 30E-04	1.17E-11	4.33E-02	3.15E+07	1.70E-09
EU154	1.74E+03	2.5%	1.00E-01	68	5.99E+06	1.12E-05	1.87E-12	3 00E-05	1.66E-14	1 60E-04	3 30E-04	7.73E-08	2 86E+02	3.15E+07	7 89E-06
CM244	2.38E+03	2 5%	1 00E-01	68	5.99E+06	1.12E-05	1.87E-12	3 00E-05	2.27E-14	1.60E-04	3 30E-04	6.70E-05	2.48E+05	3.15E+07	9 36E-03
PU238	1.58E+03	2.5%	1 00E-01	68	5 99E+06	1.12E-05	1.87E-12	3 00E-05	1.51E-14	1.60E-04	3.30E-04	1.06E-04	3 92E+05	3.15E+07	9.83E-03
SB125	7 91E+02	2 5%	1 00E-01	68	5.99E+06	1.12E-05	1 87E-12	3 00E-05	7 54E-15	1 60E-04	3 30E-04	3.30E-09	1.22E+01	3.15E+07	1.53E-07
EU155	5.41E+02	2.5%	1.00E-01	68	5.99E+06	1.12E-05	1.87E-12	3 00E-05	5.16E-15	1.60E-04	3.30E-04	1.12E-08	4.14E+01	3.15E+07	3 56E-07
AM241	2.78E+02	2 5%	1 00E-01	68	5 99E+06	1.12E-05	1.87E-12	3 00E-05	2 65E-15	1.60E-04	3 30E-04	1.20E-04	4.44E+05	3.15E+07	1.96E-03
TE125M	1.93E+02	2.5%	1 00E-01	68	5 99E+06	1.12E-05	1 87E-12	3 00E-05	1.84E-15	1 60E-04	3 30E-04	1.97E-09	7.29E+00	3.15E+07	2.24E-08
PU240	1.50E+02	2 5%	1.00E-01	68	5.99E+06	1.12E-05	1 87E-12	3 00E-05	1.43E-15	1.60E-04	3.30E-04	1.16E-04	4.29E+05	3.15E+07	1.02E-03
SM151	9 76E+01	2.5%	1 00E-01	68	5.99E+06	1.12E-05	1.87E-12	3.00E-05	9.31E-16	1.60E-04	3.30E-04	8.10E-09	3 00E+01	3.15E+07	4.64E-08
PU239	6.70E+01	2.5%	1 00E-01	68	5.99E+06	1.12E-05	1.87E-12	3 00E-05	6.39E-16	1 60E-04	3.30E-04	1.16E-04	4.29E+05	3.15E+07	4.56E-04
BA137M	3.17E+04	2 5%	1.00E-01	68	5.99E+06	1.12E-05	1.87E-12	3 00E-05	3 02E-13	1 60E-04	3.30E-04	0 00E+00	0.00E+00	3.15E+07	0.00E+00
RH106	4 71E+03	2 5%	1.00E-01	68	5 99E+06	1 12E-05	1 87E-12	3.00E-05	4 49E-14	1 60E-04	3 30E-04	0 00E+00	0.00E+00	3.15E+07	0.00E+00
PR144M	3 48E+01	2 5%	1 00E-01	68	5.99E+06	1.12E-05	1.87E-12	3.00E-05	3.32E-16	1.60E-04	3.30E-04	0 00E+00	0 00E+00	3.15E+07	0 00E+00
AM243	1 36E+01	2 5%	1.00E-01	68	5 99E+06	1.12E-05	1.87E-12	3 00E-05	1.30E-16	1.60E-04	3.30E-04	1.19E-04	4 40E+05	3.15E+07	9.50E-05
CM242	9 82E+00	2 5%	1.00E-01	68	5.99E+06	1.12E-05	1 87E-12	3 00E-05	9.36E-17	1 60E-04	3 30E-04	4 67E-06	1.73E+04	3.15E+07	2 69E-06
CM243	9.79E+00	2 5%	1 00E-01	68	5.99E+06	1.12E-05	1.87E-12	3 00E-05	9.34E-17	1 60E-04	3.30E-04	8 30E-05	3.07E+05	3.15E+07	4.77E-05
NP239	1.36E+01	2.5%	1 00E-01	68	5 99E+06	1.12E-05	1.87E-12	3 00E-05	1.30E-16	1.60E-04	3.30E-04	6.78E-10	2.51E+00	3 15E+07	5 41E-10
NP237	1.18E-01	2.5%	1.00E-01	68	5 99E+06	1.12E-05	1.87E-12	3 00E-05	1 13E-18	1 60E-04	3.30E-04	1.46E-04	5.40E+05	3.15E+07	1.01E-06
PU242	9 04E-01	2 5%	1 00E-01	68	5 99E+06	1.12E-05	1.87E-12	3 00E-05	8.62E-18	1.60E-04	3.30E-04	1.11E-04	4 11E+05	3.15E+07	5 89E-06
AM242	2.71E+00	2.5%	1.00E-01	68	5.99E+06	1.12E-05	1 87E-12	3.00E-05	2 58E-17	1.60E-04	3.30E-04	1.58E-08	5.85E+01	3.15E+07	2 51E-09
AM242M	2.72E+00	2.5%	1 00E-01	68	5 99E+06	1.12E-05	1 87E-12	3 00E-05	2 59E-17	1 60E-04	3 30E-04	1.15E-04	4.26E+05	3.15E+07	1 84E-05
														Total	5.12E-01

MPC-68															
Off-Normal Conditions															
Committed Effective Dose Equivalent From Inhalation															
Nuclide	Inventory (Ci/Assy)	% available for release	% remain airborne	No. Assy	MPC Vol (cm3)	$L_{off\ nor}$ Rate at Upstream (cm3/s)	Fraction Released per sec	Release Fraction	Release Rate (Ci/sec)	X/Q (sec/m3)	Breathing Rate (m3/sec)	DCF (Sv/Bq)	DCF (mRem/uCi)	Occ Time (sec)	CDE (mRem)
									Gases						
H 3	1.24E+02	11.5%	100%	68	5 99E+06	1.12E-05	1.87E-12	0 30	5 43E-10	1.60E-04	3 30E-04	1.73E-11	6.40E-02	3.15E+07	5.78E-05
I129	1.12E-02	11 5%	100%	68	5 99E+06	1.12E-05	1 87E-12	0 30	4 91E-14	1.60E-04	3 30E-04	8 69E-11	3 22E-01	3.15E+07	2 63E-08
KR 85	2 04E+03	11.5%	100%	68	5 99E+06	1.12E-05	1.87E-12	0 30	8.95E-09	1 60E-04	3 30E-04	0.00E+00	0 00E+00	3.15E+07	0.00E+00
									Crud						
Co-60	6 50E+01	100 0%	100%	68	5 99E+06	1.12E-05	1 87E-12	0.15	1.24E-09	1 60E-04	3 30E-04	4 76E-09	1 76E+01	3.15E+07	3 63E-02
									Volatiles						
SR 90	2 24E+04	11.5%	100%	68	5.99E+06	1.12E-05	1.87E-12	2 00E-04	6.55E-11	1 60E-04	3.30E-04	2 64E-09	9.77E+00	3.15E+07	1.06E-03
RU106	4 71E+03	11.5%	100%	68	5 99E+06	1.12E-05	1 87E-12	2 00E-04	1 38E-11	1.60E-04	3 30E-04	1.38E-08	5.11E+01	3.15E+07	1.17E-03
CS134	1.18E+04	11.5%	100%	68	5.99E+06	1 12E-05	1.87E-12	2.00E-04	3.45E-11	1 60E-04	3.30E-04	1.30E-08	4 81E+01	3.15E+07	2.76E-03
CS137	3 35E+04	11.5%	100%	68	5 99E+06	1.12E-05	1 87E-12	2.00E-04	9 80E-11	1.60E-04	3 30E-04	8.76E-09	3.24E+01	3.15E+07	5 28E-03
									Fines						
PU241	2.58E+04	11 5%	10%	68	5.99E+06	1.12E-05	1.87E-12	3 00E-05	1.13E-12	1 60E-04	3.30E-04	6 82E-07	2 52E+03	3.15E+07	4.75E-03
Y 90	2.24E+04	11.5%	10%	68	5.99E+06	1.12E-05	1.87E-12	3 00E-05	9 83E-13	1 60E-04	3.30E-04	9 52E-12	3.52E-02	3.15E+07	5 76E-08
PM147	9 63E+03	11.5%	10%	68	5 99E+06	1.12E-05	1 87E-12	3 00E-05	4.22E-13	1 60E-04	3 30E-04	1.88E-14	6.96E-05	3.15E+07	4.89E-11
CE144	2.48E+03	11.5%	10%	68	5 99E+06	1.12E-05	1.87E-12	3 00E-05	1.09E-13	1 60E-04	3.30E-04	1.93E-09	7.14E+00	3.15E+07	1 29E-06
PR144	2.48E+03	11 5%	10%	68	5.99E+06	1.12E-05	1.87E-12	3.00E-05	1.09E-13	1.60E-04	3.30E-04	2 41E-15	8.92E-06	3.15E+07	1.61E-12
EU154	1 74E+03	11 5%	10%	68	5 99E+06	1.12E-05	1 87E-12	3 00E-05	7.63E-14	1.60E-04	3 30E-04	1.17E-08	4.33E+01	3 15E+07	5.50E-06
CM244	2.38E+03	11 5%	10%	68	5 99E+06	1.12E-05	1.87E-12	3.00E-05	1 04E-13	1.60E-04	3 30E-04	1.59E-05	5 88E+04	3.15E+07	1 02E-02
PU238	1.58E+03	11 5%	10%	68	5 99E+06	1.12E-05	1.87E-12	3 00E-05	6.93E-14	1.60E-04	3.30E-04	2 80E-05	1.04E+05	3.15E+07	1.19E-02
SB125	7.91E+02	11.5%	10%	68	5.99E+06	1.12E-05	1.87E-12	3.00E-05	3.47E-14	1 60E-04	3 30E-04	3 60E-10	1 33E+00	3 15E+07	7.69E-08
EU155	5.41E+02	11 5%	10%	68	5 99E+06	1.12E-05	1.87E-12	3 00E-05	2.37E-14	1 60E-04	3 30E-04	3 56E-10	1.32E+00	3.15E+07	5.20E-08
AM241	2.78E+02	11 5%	10%	68	5 99E+06	1.12E-05	1.87E-12	3 00E-05	1 22E-14	1 60E-04	3 30E-04	3 25E-05	1 20E+05	3.15E+07	2.44E-03
TE125M	1 93E+02	11.5%	10%	68	5 99E+06	1.12E-05	1.87E-12	3 00E-05	8 48E-15	1 60E-04	3.30E-04	1 24E-10	4 59E-01	3.15E+07	6 47E-09
PU240	1 50E+02	11 5%	10%	68	5 99E+06	1.12E-05	1 87E-12	3 00E-05	6 58E-15	1 60E-04	3 30E-04	3 18E-05	1.18E+05	3.15E+07	1.29E-03
SM151	9 76E+01	11.5%	10%	68	5.99E+06	1.12E-05	1 87E-12	3 00E-05	4 28E-15	1.60E-04	3 30E-04	4.03E-14	1.49E-04	3.15E+07	1 06E-12
PU239	6 70E+01	11 5%	10%	68	5.99E+06	1.12E-05	1.87E-12	3.00E-05	2.94E-15	1 60E-04	3 30E-04	3 18E-05	1.18E+05	3 15E+07	5 75E-04
BA137M	3.17E+04	11 5%	10%	68	5 99E+06	1.12E-05	1 87E-12	3 00E-05	1 39E-12	1 60E-04	3 30E-04	0 00E+00	0 00E+00	3.15E+07	0 00E+00
RH106	4 71E+03	11.5%	10%	68	5.99E+06	1 12E-05	1.87E-12	3 00E-05	2 07E-13	1.60E-04	3.30E-04	0 00E+00	0.00E+00	3.15E+07	0 00E+00
PR144M	3 48E+01	11 5%	10%	68	5 99E+06	1.12E-05	1.87E-12	3.00E-05	1 53E-15	1 60E-04	3 30E-04	0.00E+00	0 00E+00	3.15E+07	0.00E+00
AM243	1 36E+01	11 5%	10%	68	5.99E+06	1.12E-05	1.87E-12	3 00E-05	5 97E-16	1 60E-04	3 30E-04	3 26E-05	1 21E+05	3.15E+07	1.20E-04
CM242	9 82E+00	11.5%	10%	68	5 99E+06	1.12E-05	1 87E-12	3.00E-05	4.31E-16	1 60E-04	3.30E-04	5 70E-07	2.11E+03	3.15E+07	1 51E-06
CM243	9.79E+00	11 5%	10%	68	5 99E+06	1 12E-05	1.87E-12	3.00E-05	4.29E-16	1 60E-04	3 30E-04	2 07E-05	7.66E+04	3.15E+07	5 47E-05
NP239	1.36E+01	11 5%	10%	68	5 99E+06	1 12E-05	1.87E-12	3 00E-05	5 97E-16	1.60E-04	3 30E-04	7 45E-11	2.76E-01	3 15E+07	2 74E-10
NP237	1.18E-01	11.5%	10%	68	5 99E+06	1.12E-05	1.87E-12	3 00E-05	5.18E-18	1 60E-04	3.30E-04	2.96E-05	1.10E+05	3.15E+07	9 43E-07
PU242	9 04E-01	11 5%	10%	68	5.99E+06	1.12E-05	1.87E-12	3 00E-05	3 97E-17	1.60E-04	3 30E-04	3 02E-05	1.12E+05	3.15E+07	7.37E-06
AM242	2 71E+00	11 5%	10%	68	5 99E+06	1.12E-05	1 87E-12	3 00E-05	1.19E-16	1.60E-04	3.30E-04	1.94E-09	7.18E+00	3.15E+07	1.42E-09
AM242M	2.72E+00	11 5%	10%	68	5 99E+06	1 12E-05	1 87E-12	3.00E-05	1 19E-16	1 60E-04	3.30E-04	3 21E-05	1 19E+05	3.15E+07	2 36E-05
														Total	7 81E-02

MPC-68															
Off-Normal Conditions															
Committed Effective Dose Equivalent From Inhalation															
Nuclide	Inventory (Ci/Assy)	% available for release	% remain airborne	No. Assy	MPC Vol (cm3)	$L_{off\ nor}$ Rate at Upstream (cm3/s)	Fraction Released per sec	Release Fraction	Release Rate (Ci/sec)	X/Q (sec/m3)	Breathing Rate (m3/sec)	DCF (Sv/Bq)	DCF (mRem/uCi)	Occ Time (sec)	CDE (mRem)
									Gases						
H 3	1.24E+02	11.5%	100%	68	5 99E+06	1.12E-05	1.87E-12	0.30	5 43E-10	1 60E-04	3 30E-04	1.73E-11	6.40E-02	3.15E+07	5 78E-05
I129	1.12E-02	11.5%	100%	68	5.99E+06	1.12E-05	1.87E-12	0.30	4 91E-14	1 60E-04	3 30E-04	2 09E-10	7.73E-01	3.15E+07	6.32E-08
KR 85	2 04E+03	11.5%	100%	68	5 99E+06	1.12E-05	1.87E-12	0.30	8.95E-09	1 60E-04	3 30E-04	0.00E+00	0.00E+00	3.15E+07	0 00E+00
									Crud						
Co-60	6 50E+01	100 0%	100%	68	5 99E+06	1.12E-05	1.87E-12	0.15	1 24E-09	1 60E-04	3.30E-04	1 84E-08	6 81E+01	3.15E+07	1.40E-01
									Volatiles						
SR 90	2.24E+04	11 5%	100%	68	5 99E+06	1.12E-05	1 87E-12	2 00E-04	6.55E-11	1 60E-04	3.30E-04	2 64E-09	9.77E+00	3.15E+07	1.06E-03
RU106	4.71E+03	11.5%	100%	68	5 99E+06	1.12E-05	1.87E-12	2.00E-04	1.38E-11	1.60E-04	3.30E-04	1.37E-08	5 07E+01	3.15E+07	1.16E-03
CS134	1.18E+04	11.5%	100%	68	5.99E+06	1.12E-05	1.87E-12	2.00E-04	3.45E-11	1.60E-04	3.30E-04	1.08E-08	4 00E+01	3.15E+07	2.29E-03
CS137	3.35E+04	11.5%	100%	68	5 99E+06	1.12E-05	1.87E-12	2.00E-04	9 80E-11	1.60E-04	3.30E-04	7.84E-09	2 90E+01	3.15E+07	4 73E-03
									Fines						
PU241	2.58E+04	11.5%	10%	68	5 99E+06	1.12E-05	1.87E-12	3 00E-05	1.13E-12	1.60E-04	3.30E-04	3 06E-11	1.13E-01	3 15E+07	2.13E-07
Y 90	2.24E+04	11.5%	10%	68	5 99E+06	1.12E-05	1.87E-12	3.00E-05	9.83E-13	1.60E-04	3.30E-04	9.52E-12	3 52E-02	3.15E+07	5 76E-08
PM147	9 63E+03	11.5%	10%	68	5 99E+06	1.12E-05	1.87E-12	3 00E-05	4.22E-13	1.60E-04	3.30E-04	3 60E-14	1 33E-04	3.15E+07	9 36E-11
CE144	2.48E+03	11 5%	10%	68	5.99E+06	1.12E-05	1 87E-12	3 00E-05	1 09E-13	1 60E-04	3 30E-04	1.97E-09	7.29E+00	3.15E+07	1.32E-06
PR144	2.48E+03	11.5%	10%	68	5 99E+06	1.12E-05	1 87E-12	3 00E-05	1.09E-13	1 60E-04	3.30E-04	1.05E-14	3 89E-05	3.15E+07	7.03E-12
EU154	1.74E+03	11.5%	10%	68	5 99E+06	1.12E-05	1.87E-12	3 00E-05	7.63E-14	1.60E-04	3.30E-04	1 55E-08	5.74E+01	3.15E+07	7.28E-06
CM244	2.38E+03	11.5%	10%	68	5 99E+06	1.12E-05	1.87E-12	3 00E-05	1.04E-13	1.60E-04	3.30E-04	1.04E-09	3 85E+00	3.15E+07	6 68E-07
PU238	1.58E+03	11 5%	10%	68	5.99E+06	1.12E-05	1.87E-12	3 00E-05	6 93E-14	1.60E-04	3 30E-04	1 00E-09	3.70E+00	3.15E+07	4.27E-07
SB125	7.91E+02	11.5%	10%	68	5 99E+06	1.12E-05	1.87E-12	3.00E-05	3.47E-14	1.60E-04	3.30E-04	4.16E-10	1.54E+00	3.15E+07	8 88E-08
EU155	5 41E+02	11.5%	10%	68	5 99E+06	1.12E-05	1 87E-12	3.00E-05	2 37E-14	1 60E-04	3 30E-04	6.14E-10	2.27E+00	3.15E+07	8 97E-08
AM241	2 78E+02	11 5%	10%	68	5 99E+06	1 12E-05	1.87E-12	3.00E-05	1.22E-14	1.60E-04	3 30E-04	2.67E-09	9 88E+00	3.15E+07	2 00E-07
TE125M	1.93E+02	11.5%	10%	68	5.99E+06	1.12E-05	1.87E-12	3.00E-05	8 48E-15	1 60E-04	3 30E-04	1 07E-10	3.96E-01	3.15E+07	5.59E-09
PU240	1 50E+02	11 5%	10%	68	5 99E+06	1.12E-05	1 87E-12	3 00E-05	6 58E-15	1 60E-04	3.30E-04	9.51E-10	3 52E+00	3.15E+07	3 85E-08
SM151	9.76E+01	11.5%	10%	68	5.99E+06	1.12E-05	1 87E-12	3.00E-05	4.28E-15	1.60E-04	3.30E-04	1.49E-13	5.51E-04	3.15E+07	3.93E-12
PU239	6 70E+01	11.5%	10%	68	5.99E+06	1.12E-05	1.87E-12	3 00E-05	2 94E-15	1 60E-04	3 30E-04	9 22E-10	3 41E+00	3.15E+07	1.67E-08
BA137M	3 17E+04	11.5%	10%	68	5 99E+06	1.12E-05	1 87E-12	3 00E-05	1.39E-12	1.60E-04	3 30E-04	0.00E+00	0 00E+00	3.15E+07	0.00E+00
RH106	4.71E+03	11.5%	10%	68	5.99E+06	1.12E-05	1.87E-12	3 00E-05	2 07E-13	1.60E-04	3 30E-04	0 00E+00	0.00E+00	3.15E+07	0.00E+00
PR144M	3 48E+01	11 5%	10%	68	5.99E+06	1.12E-05	1.87E-12	3 00E-05	1.53E-15	1 60E-04	3.30E-04	0 00E+00	0 00E+00	3.15E+07	0 00E+00
AM243	1.36E+01	11.5%	10%	68	5 99E+06	1.12E-05	1.87E-12	3.00E-05	5 97E-16	1 60E-04	3 30E-04	1.52E-08	5.62E+01	3.15E+07	5.58E-08
CM242	9 82E+00	11.5%	10%	68	5 99E+06	1.12E-05	1.87E-12	3 00E-05	4.31E-16	1.60E-04	3.30E-04	9 44E-10	3 49E+00	3.15E+07	2 50E-09
CM243	9.79E+00	11.5%	10%	68	5.99E+06	1.12E-05	1.87E-12	3 00E-05	4.29E-16	1 60E-04	3.30E-04	6 29E-09	2.33E+01	3.15E+07	1.66E-08
NP239	1 36E+01	11.5%	10%	68	5 99E+06	1.12E-05	1.87E-12	3.00E-05	5.97E-16	1 60E-04	3 30E-04	1 63E-11	6 03E-02	3.15E+07	5 98E-11
NP237	1.18E-01	11.5%	10%	68	5.99E+06	1.12E-05	1 87E-12	3 00E-05	5.18E-18	1.60E-04	3.30E-04	1.69E-08	6.25E+01	3.15E+07	5 38E-10
PU242	9 04E-01	11 5%	10%	68	5.99E+06	1.12E-05	1.87E-12	3 00E-05	3 97E-17	1.60E-04	3 30E-04	9.45E-10	3.50E+00	3.15E+07	2 31E-10
AM242	2 71E+00	11.5%	10%	68	5 99E+06	1.12E-05	1.87E-12	3 00E-05	1.19E-16	1.60E-04	3.30E-04	2.94E-12	1.09E-02	3.15E+07	2.15E-12
AM242M	2.72E+00	11.5%	10%	68	5 99E+06	1.12E-05	1 87E-12	3 00E-05	1.19E-16	1 60E-04	3 30E-04	1.38E-09	5.11E+00	3.15E+07	1.01E-09
														Total	1 50E-01

MPC-68															
Off-Normal Conditions															
Committed Effective Dose Equivalent From Inhalation															
Nuclide	Inventory (Ci/Assy)	% available for release	% remain airborne	No. Assy	MPC Vol (cm3)	$L_{off\ nor}$ Rate at Upstream (cm3/s)	Fraction Released per sec	Release Fraction	Release Rate (Ci/sec)	X/Q (sec/m3)	Breathing Rate (m3/sec)	DCF (Sv/Bq)	DCF (mRem/uCi)	Occ Time (sec)	CDE (mRem)
									Gases						
H 3	1 24E+02	11 5%	100%	68	5 99E+06	1.12E-05	1.87E-12	0 30	5 43E-10	1.60E-04	3.30E-04	1 73E-11	6 40E-02	3.15E+07	5.78E-05
I129	1.12E-02	11 5%	100%	68	5 99E+06	1.12E-05	1.87E-12	0 30	4.91E-14	1.60E-04	3 30E-04	3.14E-10	1 16E+00	3.15E+07	9 49E-08
KR 85	2 04E+03	11.5%	100%	68	5 99E+06	1.12E-05	1.87E-12	0 30	8.95E-09	1.60E-04	3 30E-04	0.00E+00	0.00E+00	3.15E+07	0.00E+00
									Crud						
Co-60	6 50E+01	100 0%	100%	68	5 99E+06	1.12E-05	1 87E-12	0.15	1 24E-09	1.60E-04	3 30E-04	3 45E-07	1.28E+03	3.15E+07	2 63E+00
									Volatiles						
SR 90	2 24E+04	11 5%	100%	68	5 99E+06	1.12E-05	1.87E-12	2 00E-04	6.55E-11	1.60E-04	3.30E-04	2 86E-06	1 06E+04	3.15E+07	1.15E+00
RU106	4.71E+03	11 5%	100%	68	5 99E+06	1.12E-05	1.87E-12	2.00E-04	1.38E-11	1 60E-04	3.30E-04	1.04E-06	3 85E+03	3.15E+07	8 82E-02
CS134	1.18E+04	11.5%	100%	68	5 99E+06	1.12E-05	1.87E-12	2.00E-04	3 45E-11	1.60E-04	3.30E-04	1.18E-08	4.37E+01	3.15E+07	2.51E-03
CS137	3 35E+04	11.5%	100%	68	5.99E+06	1.12E-05	1.87E-12	2.00E-04	9 80E-11	1.60E-04	3 30E-04	8.82E-09	3 26E+01	3.15E+07	5 32E-03
									Fines						
PU241	2.58E+04	11.5%	10%	68	5 99E+06	1.12E-05	1.87E-12	3.00E-05	1.13E-12	1.60E-04	3 30E-04	3 18E-06	1.18E+04	3 15E+07	2.21E-02
Y 90	2 24E+04	11.5%	10%	68	5 99E+06	1.12E-05	1 87E-12	3.00E-05	9 83E-13	1.60E-04	3 30E-04	9 31E-09	3.44E+01	3.15E+07	5.63E-05
PM147	9 63E+03	11.5%	10%	68	5.99E+06	1.12E-05	1.87E-12	3.00E-05	4 22E-13	1.60E-04	3 30E-04	7.74E-08	2.86E+02	3.15E+07	2.01E-04
CE144	2.48E+03	11 5%	10%	68	5 99E+06	1.12E-05	1.87E-12	3 00E-05	1.09E-13	1 60E-04	3 30E-04	7.91E-07	2 93E+03	3.15E+07	5.30E-04
PR144	2.48E+03	11.5%	10%	68	5.99E+06	1 12E-05	1 87E-12	3.00E-05	1 09E-13	1 60E-04	3 30E-04	9 40E-11	3.48E-01	3.15E+07	6.29E-08
EU154	1.74E+03	11.5%	10%	68	5 99E+06	1.12E-05	1.87E-12	3 00E-05	7.63E-14	1 60E-04	3.30E-04	7 92E-08	2.93E+02	3 15E+07	3.72E-05
CM244	2 38E+03	11.5%	10%	68	5.99E+06	1.12E-05	1.87E-12	3 00E-05	1.04E-13	1 60E-04	3.30E-04	1 93E-05	7.14E+04	3.15E+07	1.24E-02
PU238	1 58E+03	11.5%	10%	68	5 99E+06	1.12E-05	1.87E-12	3 00E-05	6.93E-14	1 60E-04	3.30E-04	3 20E-04	1.18E+06	3.15E+07	1 36E-01
SB125	7 91E+02	11 5%	10%	68	5 99E+06	1.12E-05	1 87E-12	3.00E-05	3 47E-14	1.60E-04	3 30E-04	2.17E-08	8 03E+01	3 15E+07	4 63E-06
EU155	5.41E+02	11.5%	10%	68	5.99E+06	1.12E-05	1.87E-12	3 00E-05	2.37E-14	1.60E-04	3.30E-04	1.19E-08	4.40E+01	3.15E+07	1.74E-06
AM241	2 78E+02	11 5%	10%	68	5 99E+06	1.12E-05	1 87E-12	3.00E-05	1 22E-14	1 60E-04	3 30E-04	1.84E-05	6 81E+04	3.15E+07	1 38E-03
TE125M	1 93E+02	11.5%	10%	68	5 99E+06	1.12E-05	1.87E-12	3 00E-05	8.48E-15	1.60E-04	3.30E-04	1 04E-08	3 85E+01	3.15E+07	5 43E-07
PU240	1.50E+02	11.5%	10%	68	5.99E+06	1.12E-05	1.87E-12	3 00E-05	6 58E-15	1 60E-04	3 30E-04	3 23E-04	1.20E+06	3.15E+07	1.31E-02
SM151	9 76E+01	11.5%	10%	68	5.99E+06	1.12E-05	1.87E-12	3 00E-05	4.28E-15	1.60E-04	3.30E-04	3.26E-09	1 21E+01	3.15E+07	8 59E-08
PU239	6.70E+01	11.5%	10%	68	5 99E+06	1.12E-05	1 87E-12	3 00E-05	2.94E-15	1.60E-04	3 30E-04	3 23E-04	1 20E+06	3.15E+07	5 84E-03
BA137M	3 17E+04	11.5%	10%	68	5 99E+06	1.12E-05	1.87E-12	3 00E-05	1.39E-12	1 60E-04	3 30E-04	0 00E+00	0 00E+00	3 15E+07	0 00E+00
RH106	4.71E+03	11.5%	10%	68	5 99E+06	1.12E-05	1 87E-12	3 00E-05	2 07E-13	1 60E-04	3.30E-04	0.00E+00	0.00E+00	3.15E+07	0.00E+00
PR144M	3.48E+01	11 5%	10%	68	5 99E+06	1.12E-05	1 87E-12	3.00E-05	1 53E-15	1.60E-04	3 30E-04	0.00E+00	0 00E+00	3.15E+07	0 00E+00
AM243	1.36E+01	11 5%	10%	68	5 99E+06	1.12E-05	1 87E-12	3.00E-05	5 97E-16	1 60E-04	3 30E-04	1 78E-05	6 59E+04	3.15E+07	6 53E-05
CM242	9 82E+00	11 5%	10%	68	5 99E+06	1.12E-05	1.87E-12	3 00E-05	4.31E-16	1 60E-04	3 30E-04	1 55E-05	5.74E+04	3 15E+07	4.11E-05
CM243	9 79E+00	11 5%	10%	68	5 99E+06	1.12E-05	1 87E-12	3 00E-05	4.29E-16	1 60E-04	3.30E-04	1 94E-05	7.18E+04	3 15E+07	5.13E-05
NP239	1 36E+01	11 5%	10%	68	5 99E+06	1.12E-05	1 87E-12	3 00E-05	5 97E-16	1 60E-04	3.30E-04	2 36E-09	8 73E+00	3 15E+07	8 66E-09
NP237	1 18E-01	11 5%	10%	68	5 99E+06	1.12E-05	1 87E-12	3 00E-05	5.18E-18	1 60E-04	3.30E-04	1 61E-05	5.96E+04	3.15E+07	5 13E-07
PU242	9 04E-01	11.5%	10%	68	5.99E+06	1 12E-05	1 87E-12	3 00E-05	3 97E-17	1.60E-04	3 30E-04	3.07E-04	1.14E+06	3.15E+07	7.49E-05
AM242	2.71E+00	11 5%	10%	68	5 99E+06	1.12E-05	1 87E-12	3 00E-05	1.19E-16	1 60E-04	3 30E-04	5 20E-08	1.92E+02	3.15E+07	3 80E-08
AM242M	2 72E+00	11 5%	10%	68	5 99E+06	1.12E-05	1.87E-12	3 00E-05	1.19E-16	1.60E-04	3 30E-04	4 20E-06	1 55E+04	3.15E+07	3 08E-06
														Total	4.07E+00

MPC-68															
Off-Normal Conditions															
Committed Effective Dose Equivalent From Inhalation															
Nuclide	Inventory (Ci/Assy)	% available for release	% remain airborne	No. Assy	MPC Vol (cm3)	$L_{off\ nor}$ Rate at Upstream (cm3/s)	Fraction Released per sec	Release Fraction	Release Rate (Ci/sec)	X/Q (sec/m3)	Breathing Rate (m3/sec)	DCF (Sv/Bq)	DCF (mRem/uCi)	Occ Time (sec)	CDE (mRem)
									Gases						
H 3	1.24E+02	11.5%	100%	68	5.99E+06	1.12E-05	1.87E-12	0.30	5 43E-10	1.60E-04	3.30E-04	1.73E-11	6.40E-02	3.15E+07	5.78E-05
I129	1.12E-02	11.5%	100%	68	5.99E+06	1.12E-05	1.87E-12	0.30	4.91E-14	1.60E-04	3.30E-04	1.40E-10	5.18E-01	3.15E+07	4.23E-08
KR 85	2 04E+03	11.5%	100%	68	5.99E+06	1.12E-05	1.87E-12	0.30	8 95E-09	1.60E-04	3.30E-04	0.00E+00	0 00E+00	3.15E+07	0 00E+00
									Crud						
Co-60	6 50E+01	100 0%	100%	68	5 99E+06	1.12E-05	1.87E-12	0.15	1.24E-09	1.60E-04	3.30E-04	1.72E-08	6.36E+01	3.15E+07	1.31E-01
									Volatiles						
SR 90	2.24E+04	11.5%	100%	68	5.99E+06	1.12E-05	1.87E-12	2 00E-04	6.55E-11	1.60E-04	3 30E-04	3 36E-07	1.24E+03	3 15E+07	1.35E-01
RU106	4.71E+03	11.5%	100%	68	5.99E+06	1.12E-05	1.87E-12	2 00E-04	1 38E-11	1.60E-04	3 30E-04	1.37E-08	5 07E+01	3.15E+07	1.16E-03
CS134	1.18E+04	11.5%	100%	68	5.99E+06	1.12E-05	1.87E-12	2 00E-04	3 45E-11	1 60E-04	3.30E-04	1.18E-08	4.37E+01	3.15E+07	2.51E-03
CS137	3 35E+04	11 5%	100%	68	5.99E+06	1.12E-05	1.87E-12	2.00E-04	9.80E-11	1.60E-04	3.30E-04	8.30E-09	3 07E+01	3.15E+07	5 00E-03
									Fines						
PU241	2 58E+04	11 5%	10%	68	5 99E+06	1.12E-05	1 87E-12	3 00E-05	1.13E-12	1.60E-04	3.30E-04	3.36E-06	1.24E+04	3.15E+07	2 34E-02
Y 90	2 24E+04	11.5%	10%	68	5 99E+06	1.12E-05	1.87E-12	3.00E-05	9 83E-13	1.60E-04	3.30E-04	2.79E-10	1 03E+00	3.15E+07	1 69E-06
PM147	9 63E+03	11 5%	10%	68	5 99E+06	1 12E-05	1.87E-12	3 00E-05	4 22E-13	1.60E-04	3.30E-04	8.16E-09	3 02E+01	3.15E+07	2.12E-05
CE144	2 48E+03	11.5%	10%	68	5 99E+06	1.12E-05	1.87E-12	3 00E-05	1.09E-13	1.60E-04	3 30E-04	2.67E-08	9 88E+01	3.15E+07	1.79E-05
PR144	2.48E+03	11.5%	10%	68	5 99E+06	1.12E-05	1.87E-12	3 00E-05	1 09E-13	1.60E-04	3.30E-04	8 08E-14	2.99E-04	3.15E+07	5 41E-11
EU154	1.74E+03	11.5%	10%	68	5.99E+06	1.12E-05	1 87E-12	3 00E-05	7 63E-14	1.60E-04	3.30E-04	1 06E-07	3.92E+02	3.15E+07	4.98E-05
CM244	2.38E+03	11.5%	10%	68	5.99E+06	1.12E-05	1.87E-12	3 00E-05	1 04E-13	1.60E-04	3.30E-04	9.38E-05	3.47E+05	3.15E+07	6.03E-02
PU238	1.58E+03	11.5%	10%	68	5 99E+06	1.12E-05	1.87E-12	3 00E-05	6.93E-14	1 60E-04	3.30E-04	1.52E-04	5 62E+05	3.15E+07	6 48E-02
SB125	7.91E+02	11 5%	10%	68	5 99E+06	1.12E-05	1 87E-12	3 00E-05	3.47E-14	1.60E-04	3.30E-04	6.49E-10	2.40E+00	3.15E+07	1.39E-07
EU155	5 41E+02	11.5%	10%	68	5.99E+06	1.12E-05	1 87E-12	3 00E-05	2 37E-14	1.60E-04	3.30E-04	1.43E-08	5 29E+01	3.15E+07	2.09E-06
AM241	2 78E+02	11 5%	10%	68	5 99E+06	1.12E-05	1.87E-12	3.00E-05	1.22E-14	1.60E-04	3.30E-04	1.74E-04	6 44E+05	3.15E+07	1.31E-02
TE125M	1 93E+02	11.5%	10%	68	5 99E+06	1.12E-05	1.87E-12	3.00E-05	8 48E-15	1 60E-04	3.30E-04	3 01E-09	1.11E+01	3.15E+07	1.57E-07
PU240	1.50E+02	11.5%	10%	68	5.99E+06	1.12E-05	1.87E-12	3 00E-05	6 58E-15	1.60E-04	3 30E-04	1 69E-04	6 25E+05	3.15E+07	6 84E-03
SM151	9 76E+01	11 5%	10%	68	5.99E+06	1.12E-05	1.87E-12	3 00E-05	4.28E-15	1.60E-04	3.30E-04	1.10E-08	4.07E+01	3.15E+07	2 90E-07
PU239	6 70E+01	11 5%	10%	68	5.99E+06	1.12E-05	1.87E-12	3 00E-05	2.94E-15	1.60E-04	3.30E-04	1 69E-04	6.25E+05	3.15E+07	3.06E-03
BA137M	3.17E+04	11.5%	10%	68	5 99E+06	1.12E-05	1.87E-12	3 00E-05	1.39E-12	1.60E-04	3.30E-04	0 00E+00	0.00E+00	3.15E+07	0 00E+00
RH106	4.71E+03	11 5%	10%	68	5 99E+06	1.12E-05	1.87E-12	3.00E-05	2.07E-13	1.60E-04	3.30E-04	0.00E+00	0.00E+00	3.15E+07	0 00E+00
PR144M	3 48E+01	11.5%	10%	68	5 99E+06	1.12E-05	1 87E-12	3 00E-05	1.53E-15	1.60E-04	3.30E-04	0.00E+00	0.00E+00	3.15E+07	0 00E+00
AM243	1.36E+01	11.5%	10%	68	5 99E+06	1.12E-05	1.87E-12	3.00E-05	5 97E-16	1 60E-04	3.30E-04	1.73E-04	6.40E+05	3.15E+07	6.35E-04
CM242	9 82E+00	11 5%	10%	68	5 99E+06	1.12E-05	1.87E-12	3 00E-05	4.31E-16	1 60E-04	3 30E-04	3.90E-06	1 44E+04	3.15E+07	1.03E-05
CM243	9 79E+00	11.5%	10%	68	5 99E+06	1.12E-05	1 87E-12	3.00E-05	4.29E-16	1 60E-04	3.30E-04	1.18E-04	4 37E+05	3.15E+07	3.12E-04
NP239	1.36E+01	11.5%	10%	68	5.99E+06	1.12E-05	1 87E-12	3 00E-05	5 97E-16	1.60E-04	3.30E-04	2.08E-10	7.70E-01	3.15E+07	7.64E-10
NP237	1 18E-01	11 5%	10%	68	5 99E+06	1.12E-05	1.87E-12	3.00E-05	5.18E-18	1.60E-04	3.30E-04	2 62E-04	9 69E+05	3.15E+07	8 35E-06
PU242	9 04E-01	11.5%	10%	68	5 99E+06	1.12E-05	1 87E-12	3 00E-05	3 97E-17	1.60E-04	3.30E-04	1 61E-04	5 96E+05	3.15E+07	3.93E-05
AM242	2.71E+00	11 5%	10%	68	5 99E+06	1.12E-05	1.87E-12	3.00E-05	1.19E-16	1.60E-04	3 30E-04	1 32E-08	4.88E+01	3.15E+07	9 66E-09
AM242M	2.72E+00	11.5%	10%	68	5.99E+06	1.12E-05	1 87E-12	3 00E-05	1.19E-16	1.60E-04	3.30E-04	1.69E-04	6 25E+05	3.15E+07	1 24E-04
														Total	4.48E-01

MPC-68															
Off-Normal Conditions															
Committed Effective Dose Equivalent From Inhalation															
Nuclide	Inventory (Ci/Assy)	% available for release	% remain airborne	No Assy	MPC Vol (cm3)	$L_{off\ nor}$ Rate at Upstream (cm3/s)	Fraction Released per sec	Release Fraction	Release Rate (Ci/sec)	X/Q (sec/m3)	Breathing Rate (m3/sec)	DCF (Sv/Bq)	DCF (mRem/uCi)	Occ Time (sec)	CDE (mRem)
									Gases						
H 3	1.24E+02	11.5%	100%	68	5 99E+06	1.12E-05	1.87E-12	0 30	5 43E-10	1 60E-04	3 30E-04	1.73E-11	6.40E-02	3.15E+07	5 78E-05
I129	1.12E-02	11 5%	100%	68	5 99E+06	1.12E-05	1.87E-12	0.30	4 91E-14	1.60E-04	3 30E-04	1.38E-10	5.11E-01	3.15E+07	4.17E-08
KR 85	2.04E+03	11.5%	100%	68	5 99E+06	1.12E-05	1 87E-12	0 30	8.95E-09	1 60E-04	3.30E-04	0.00E+00	0.00E+00	3.15E+07	0 00E+00
									Crud						
Co-60	6.50E+01	100.0%	100%	68	5 99E+06	1.12E-05	1.87E-12	0.15	1.24E-09	1.60E-04	3.30E-04	1.35E-08	5.00E+01	3.15E+07	1.03E-01
									Volatiles						
SR 90	2 24E+04	11 5%	100%	68	5.99E+06	1.12E-05	1.87E-12	2 00E-04	6 55E-11	1.60E-04	3 30E-04	7 27E-07	2.69E+03	3.15E+07	2.93E-01
RU106	4 71E+03	11 5%	100%	68	5.99E+06	1.12E-05	1.87E-12	2 00E-04	1 38E-11	1.60E-04	3 30E-04	1.37E-08	5 07E+01	3.15E+07	1.16E-03
CS134	1.18E+04	11.5%	100%	68	5 99E+06	1.12E-05	1 87E-12	2.00E-04	3.45E-11	1.60E-04	3.30E-04	1.10E-08	4.07E+01	3 15E+07	2 34E-03
CS137	3 35E+04	11.5%	100%	68	5 99E+06	1.12E-05	1 87E-12	2 00E-04	9 80E-11	1 60E-04	3.30E-04	7.94E-09	2 94E+01	3.15E+07	4.79E-03
									Fines						
PU241	2 58E+04	11 5%	10%	68	5 99E+06	1.12E-05	1.87E-12	3 00E-05	1 13E-12	1.60E-04	3.30E-04	4 20E-05	1 55E+05	3.15E+07	2 93E-01
Y 90	2.24E+04	11 5%	10%	68	5 99E+06	1.12E-05	1 87E-12	3 00E-05	9 83E-13	1 60E-04	3.30E-04	2.78E-10	1.03E+00	3.15E+07	1.68E-06
PM147	9 63E+03	11 5%	10%	68	5 99E+06	1.12E-05	1.87E-12	3 00E-05	4 22E-13	1.60E-04	3 30E-04	1 02E-07	3.77E+02	3.15E+07	2.65E-04
CE144	2 48E+03	11 5%	10%	68	5 99E+06	1.12E-05	1 87E-12	3.00E-05	1.09E-13	1 60E-04	3 30E-04	4 54E-08	1.68E+02	3 15E+07	3 04E-05
PR144	2 48E+03	11.5%	10%	68	5.99E+06	1.12E-05	1.87E-12	3.00E-05	1.09E-13	1 60E-04	3.30E-04	1.35E-13	5 00E-04	3.15E+07	9.04E-11
EU154	1.74E+03	11 5%	10%	68	5 99E+06	1.12E-05	1 87E-12	3 00E-05	7 63E-14	1 60E-04	3.30E-04	5.23E-07	1 94E+03	3 15E+07	2 46E-04
CM244	2.38E+03	11 5%	10%	68	5 99E+06	1.12E-05	1.87E-12	3 00E-05	1 04E-13	1 60E-04	3 30E-04	1.17E-03	4.33E+06	3.15E+07	7.52E-01
PU238	1.58E+03	11.5%	10%	68	5 99E+06	1.12E-05	1 87E-12	3 00E-05	6 93E-14	1 60E-04	3 30E-04	1.90E-03	7.03E+06	3.15E+07	8.10E-01
SB125	7 91E+02	11.5%	10%	68	5 99E+06	1.12E-05	1 87E-12	3 00E-05	3 47E-14	1 60E-04	3 30E-04	2.73E-09	1 01E+01	3.15E+07	5.83E-07
EU155	5 41E+02	11 5%	10%	68	5.99E+06	1 12E-05	1.87E-12	3 00E-05	2.37E-14	1.60E-04	3 30E-04	1 52E-07	5 62E+02	3.15E+07	2.22E-05
AM241	2.78E+02	11.5%	10%	68	5 99E+06	1.12E-05	1 87E-12	3 00E-05	1.22E-14	1.60E-04	3.30E-04	2.17E-03	8 03E+06	3.15E+07	1.63E-01
TE125M	1 93E+02	11.5%	10%	68	5 99E+06	1.12E-05	1.87E-12	3 00E-05	8 48E-15	1 60E-04	3 30E-04	3.21E-08	1.19E+02	3.15E+07	1 68E-06
PU240	1.50E+02	11 5%	10%	68	5 99E+06	1.12E-05	1.87E-12	3 00E-05	6 58E-15	1.60E-04	3.30E-04	2.11E-03	7.81E+06	3.15E+07	8 54E-02
SM151	9.76E+01	11.5%	10%	68	5 99E+06	1.12E-05	1.87E-12	3.00E-05	4 28E-15	1 60E-04	3.30E-04	1.38E-07	5.11E+02	3.15E+07	3 64E-06
PU239	6.70E+01	11 5%	10%	68	5.99E+06	1.12E-05	1 87E-12	3.00E-05	2.94E-15	1.60E-04	3 30E-04	2 11E-03	7.81E+06	3.15E+07	3 82E-02
BA137M	3.17E+04	11 5%	10%	68	5 99E+06	1.12E-05	1.87E-12	3 00E-05	1.39E-12	1.60E-04	3 30E-04	0 00E+00	0.00E+00	3.15E+07	0 00E+00
RH106	4 71E+03	11.5%	10%	68	5.99E+06	1.12E-05	1.87E-12	3.00E-05	2 07E-13	1 60E-04	3.30E-04	0 00E+00	0 00E+00	3.15E+07	0.00E+00
PR144M	3 48E+01	11 5%	10%	68	5.99E+06	1.12E-05	1.87E-12	3 00E-05	1.53E-15	1 60E-04	3.30E-04	0 00E+00	0 00E+00	3.15E+07	0 00E+00
AM243	1.36E+01	11 5%	10%	68	5.99E+06	1 12E-05	1.87E-12	3 00E-05	5.97E-16	1 60E-04	3 30E-04	2 17E-03	8 03E+06	3 15E+07	7 97E-03
CM242	9 82E+00	11 5%	10%	68	5.99E+06	1 12E-05	1.87E-12	3 00E-05	4.31E-16	1 60E-04	3 30E-04	4 87E-05	1 80E+05	3 15E+07	1 29E-04
CM243	9 79E+00	11 5%	10%	68	5 99E+06	1 12E-05	1.87E-12	3 00E-05	4.29E-16	1 60E-04	3 30E-04	1.47E-03	5.44E+06	3.15E+07	3 88E-03
NP239	1 36E+01	11.5%	10%	68	5 99E+06	1.12E-05	1.87E-12	3 00E-05	5 97E-16	1 60E-04	3 30E-04	2 03E-09	7 51E+00	3 15E+07	7 45E-09
NP237	1 18E-01	11.5%	10%	68	5 99E+06	1.12E-05	1 87E-12	3.00E-05	5 18E-18	1.60E-04	3 30E-04	3 27E-03	1.21E+07	3 15E+07	1.04E-04
PU242	9 04E-01	11.5%	10%	68	5.99E+06	1 12E-05	1 87E-12	3 00E-05	3 97E-17	1.60E-04	3.30E-04	2 01E-03	7 44E+06	3 15E+07	4 90E-04
AM242	2.71E+00	11.5%	10%	68	5 99E+06	1.12E-05	1.87E-12	3 00E-05	1.19E-16	1.60E-04	3 30E-04	1.65E-07	6 11E+02	3.15E+07	1 21E-07
AM242M	2.72E+00	11 5%	10%	68	5 99E+06	1.12E-05	1 87E-12	3.00E-05	1.19E-16	1.60E-04	3 30E-04	2.12E-03	7.84E+06	3.15E+07	1.56E-03
														Total	2 56E+00

MPC-68															
Off-Normal Conditions															
Committed Effective Dose Equivalent From Inhalation															
Nuclide	Inventory (Ci/Assy)	% available for release	% remain airborne	No Assy	MPC Vol (cm3)	$L_{off\ nor}$ Rate at Upstream (cm3/s)	Fraction Released per sec	Release Fraction	Release Rate (Ci/sec)	X/Q (sec/m3)	Breathing Rate (m3/sec)	DCF (Sv/Bq)	DCF (mRem/uCi)	Occ Time (sec)	CDE (mRem)
									Gases						
H 3	1.24E+02	11.5%	100%	68	5 99E+06	1.12E-05	1.87E-12	0.30	5.43E-10	1.60E-04	3.30E-04	1.73E-11	6 40E-02	3.15E+07	5.78E-05
I129	1.12E-02	11.5%	100%	68	5.99E+06	1.12E-05	1 87E-12	0 30	4.91E-14	1.60E-04	3.30E-04	1.56E-06	5.77E+03	3.15E+07	4.72E-04
KR 85	2 04E+03	11.5%	100%	68	5 99E+06	1.12E-05	1.87E-12	0 30	8.95E-09	1.60E-04	3 30E-04	0 00E+00	0 00E+00	3.15E+07	0 00E+00
									Crud						
Co-60	6.50E+01	100 0%	100%	68	5 99E+06	1.12E-05	1 87E-12	0.15	1 24E-09	1.60E-04	3.30E-04	1 62E-08	5 99E+01	3.15E+07	1 24E-01
									Volatiles						
SR 90	2.24E+04	11 5%	100%	68	5.99E+06	1.12E-05	1 87E-12	2 00E-04	6 55E-11	1.60E-04	3.30E-04	2.64E-09	9.77E+00	3.15E+07	1 06E-03
RU106	4.71E+03	11 5%	100%	68	5 99E+06	1.12E-05	1.87E-12	2.00E-04	1.38E-11	1 60E-04	3.30E-04	1.37E-08	5.07E+01	3.15E+07	1.16E-03
CS134	1.18E+04	11.5%	100%	68	5 99E+06	1.12E-05	1.87E-12	2.00E-04	3 45E-11	1 60E-04	3 30E-04	1.11E-08	4.11E+01	3.15E+07	2 36E-03
CS137	3.35E+04	11.5%	100%	68	5.99E+06	1.12E-05	1 87E-12	2 00E-04	9 80E-11	1 60E-04	3 30E-04	7 93E-09	2 93E+01	3 15E+07	4.78E-03
									Fines						
PU241	2.58E+04	11.5%	10%	68	5 99E+06	1.12E-05	1 87E-12	3 00E-05	1.13E-12	1 60E-04	3.30E-04	1.24E-11	4 59E-02	3.15E+07	8 64E-08
Y 90	2.24E+04	11.5%	10%	68	5.99E+06	1.12E-05	1 87E-12	3 00E-05	9.83E-13	1.60E-04	3.30E-04	9.52E-12	3.52E-02	3.15E+07	5.76E-08
PM147	9 63E+03	11 5%	10%	68	5 99E+06	1.12E-05	1.87E-12	3.00E-05	4.22E-13	1 60E-04	3.30E-04	1.98E-14	7.33E-05	3.15E+07	5.15E-11
CE144	2.48E+03	11 5%	10%	68	5 99E+06	1.12E-05	1.87E-12	3.00E-05	1.09E-13	1.60E-04	3 30E-04	1.88E-09	6.96E+00	3.15E+07	1.26E-06
PR144	2 48E+03	11 5%	10%	68	5 99E+06	1.12E-05	1.87E-12	3 00E-05	1.09E-13	1.60E-04	3.30E-04	8.47E-15	3.13E-05	3.15E+07	5.67E-12
EU154	1.74E+03	11 5%	10%	68	5.99E+06	1.12E-05	1.87E-12	3 00E-05	7.63E-14	1.60E-04	3 30E-04	7.14E-09	2.64E+01	3.15E+07	3.35E-06
CM244	2.38E+03	11.5%	10%	68	5 99E+06	1.12E-05	1.87E-12	3 00E-05	1.04E-13	1.60E-04	3.30E-04	1.01E-09	3 74E+00	3.15E+07	6 49E-07
PU238	1 58E+03	11 5%	10%	68	5.99E+06	1.12E-05	1 87E-12	3 00E-05	6 93E-14	1 60E-04	3.30E-04	9.62E-10	3 56E+00	3.15E+07	4 10E-07
SB125	7 91E+02	11 5%	10%	68	5 99E+06	1.12E-05	1 87E-12	3 00E-05	3.47E-14	1.60E-04	3.30E-04	3 24E-10	1.20E+00	3.15E+07	6.92E-08
EU155	5 41E+02	11 5%	10%	68	5.99E+06	1.12E-05	1.87E-12	3 00E-05	2 37E-14	1 60E-04	3 30E-04	2 40E-10	8 88E-01	3.15E+07	3 50E-08
AM241	2 78E+02	11 5%	10%	68	5 99E+06	1.12E-05	1 87E-12	3 00E-05	1.22E-14	1 60E-04	3 30E-04	1 60E-09	5 92E+00	3.15E+07	1.20E-07
TE125M	1.93E+02	11.5%	10%	68	5.99E+06	1.12E-05	1 87E-12	3 00E-05	8.48E-15	1.60E-04	3.30E-04	9.93E-11	3 67E-01	3.15E+07	5.18E-09
PU240	1.50E+02	11 5%	10%	68	5 99E+06	1.12E-05	1 87E-12	3.00E-05	6 58E-15	1.60E-04	3.30E-04	9 05E-10	3 35E+00	3.15E+07	3 66E-08
SM151	9.76E+01	11 5%	10%	68	5.99E+06	1.12E-05	1 87E-12	3 00E-05	4 28E-15	1.60E-04	3.30E-04	1.32E-14	4 88E-05	3.15E+07	3.48E-13
PU239	6.70E+01	11 5%	10%	68	5 99E+06	1.12E-05	1 87E-12	3 00E-05	2.94E-15	1.60E-04	3.30E-04	9 03E-10	3.34E+00	3.15E+07	1 63E-08
BA137M	3.17E+04	11.5%	10%	68	5.99E+06	1.12E-05	1.87E-12	3 00E-05	1.39E-12	1.60E-04	3.30E-04	0.00E+00	0.00E+00	3.15E+07	0 00E+00
RH106	4 71E+03	11 5%	10%	68	5 99E+06	1.12E-05	1.87E-12	3.00E-05	2 07E-13	1.60E-04	3 30E-04	0 00E+00	0 00E+00	3.15E+07	0 00E+00
PR144M	3.48E+01	11 5%	10%	68	5 99E+06	1.12E-05	1.87E-12	3 00E-05	1.53E-15	1.60E-04	3.30E-04	0 00E+00	0 00E+00	3.15E+07	0 00E+00
AM243	1.36E+01	11 5%	10%	68	5 99E+06	1.12E-05	1.87E-12	3.00E-05	5 97E-16	1.60E-04	3 30E-04	8 29E-09	3 07E+01	3.15E+07	3 04E-08
CM242	9 82E+00	11 5%	10%	68	5 99E+06	1.12E-05	1.87E-12	3 00E-05	4 31E-16	1.60E-04	3.30E-04	9.41E-10	3 48E+00	3.15E+07	2.49E-09
CM243	9.79E+00	11.5%	10%	68	5 99E+06	1.12E-05	1.87E-12	3 00E-05	4.29E-16	1.60E-04	3 30E-04	3.83E-09	1.42E+01	3 15E+07	1 01E-08
NP239	1.36E+01	11 5%	10%	68	5 99E+06	1.12E-05	1.87E-12	3 00E-05	5 97E-16	1.60E-04	3.30E-04	7.62E-12	2 82E-02	3.15E+07	2 80E-11
NP237	1.18E-01	11 5%	10%	68	5 99E+06	1.12E-05	1.87E-12	3.00E-05	5.18E-18	1 60E-04	3.30E-04	1.34E-08	4.96E+01	3.15E+07	4 27E-10
PU242	9 04E-01	11.5%	10%	68	5.99E+06	1.12E-05	1 87E-12	3 00E-05	3 97E-17	1.60E-04	3 30E-04	8 79E-10	3 25E+00	3.15E+07	2.14E-10
AM242	2.71E+00	11.5%	10%	68	5 99E+06	1.12E-05	1 87E-12	3 00E-05	1.19E-16	1 60E-04	3.30E-04	2 52E-12	9.32E-03	3.15E+07	1.84E-12
AM242M	2 72E+00	11 5%	10%	68	5 99E+06	1.12E-05	1.87E-12	3 00E-05	1.19E-16	1 60E-04	3.30E-04	5 64E-10	2 09E+00	3.15E+07	4.14E-10
														Total	1.33E-01

MPC-68															
Off-Normal Conditions															
Committed Effective Dose Equivalent From Inhalation															
Nuclide	Inventory (Ci/Assy)	% available for release	% remain airborne	No Assy	MPC Vol (cm3)	$L_{off\ nor}$ Rate at Upstream (cm3/s)	Fraction Released per sec	Release Fraction	Release Rate (Ci/sec)	X/Q (sec/m3)	Breathing Rate (m3/sec)	DCF (Sv/Bq)	DCF (mRem/uCi)	Occ Time (sec)	CEDE (mRem)
									Gases						
H 3	1 24E+02	11.5%	100%	68	5.99E+06	1.12E-05	1.87E-12	0.30	5 43E-10	1.60E-04	3.30E-04	1.73E-11	6.40E-02	3.15E+07	5.78E-05
I129	1.12E-02	11.5%	100%	68	5 99E+06	1.12E-05	1 87E-12	0.30	4 91E-14	1 60E-04	3 30E-04	4 69E-08	1.74E+02	3.15E+07	1.42E-05
KR 85	2 04E+03	11.5%	100%	68	5.99E+06	1.12E-05	1.87E-12	0.30	8 95E-09	1.60E-04	3.30E-04	0.00E+00	0.00E+00	3.15E+07	0.00E+00
									Crud						
Co-60	6 50E+01	100.0%	100%	68	5 99E+06	1.12E-05	1.87E-12	0.15	1.24E-09	1.60E-04	3 30E-04	5.91E-08	2.19E+02	3 15E+07	4 51E-01
									Volatiles						
SR 90	2.24E+04	11.5%	100%	68	5 99E+06	1.12E-05	1.87E-12	2 00E-04	6 55E-11	1 60E-04	3 30E-04	3.51E-07	1.30E+03	3 15E+07	1 41E-01
RU106	4 71E+03	11.5%	100%	68	5 99E+06	1.12E-05	1 87E-12	2.00E-04	1 38E-11	1.60E-04	3 30E-04	1.29E-07	4.77E+02	3.15E+07	1.09E-02
CS134	1.18E+04	11 5%	100%	68	5 99E+06	1.12E-05	1.87E-12	2.00E-04	3.45E-11	1 60E-04	3.30E-04	1.25E-08	4.63E+01	3.15E+07	2 65E-03
CS137	3.35E+04	11.5%	100%	68	5 99E+06	1.12E-05	1.87E-12	2.00E-04	9 80E-11	1.60E-04	3 30E-04	8 63E-09	3.19E+01	3.15E+07	5 20E-03
									Fines						
PU241	2.58E+04	11 5%	10%	68	5.99E+06	1 12E-05	1.87E-12	3 00E-05	1.13E-12	1.60E-04	3.30E-04	2.23E-06	8 25E+03	3.15E+07	1 55E-02
Y 90	2 24E+04	11 5%	10%	68	5 99E+06	1 12E-05	1.87E-12	3 00E-05	9.83E-13	1.60E-04	3.30E-04	2 28E-09	8.44E+00	3.15E+07	1.38E-05
PM147	9 63E+03	11 5%	10%	68	5.99E+06	1.12E-05	1.87E-12	3 00E-05	4.22E-13	1.60E-04	3 30E-04	1.06E-08	3.92E+01	3.15E+07	2.76E-05
CE144	2.48E+03	11.5%	10%	68	5 99E+06	1.12E-05	1 87E-12	3 00E-05	1 09E-13	1 60E-04	3.30E-04	1 01E-07	3.74E+02	3 15E+07	6.76E-05
PR144	2.48E+03	11.5%	10%	68	5.99E+06	1.12E-05	1.87E-12	3 00E-05	1.09E-13	1 60E-04	3.30E-04	1 17E-11	4 33E-02	3.15E+07	7 83E-09
EU154	1.74E+03	11.5%	10%	68	5 99E+06	1 12E-05	1 87E-12	3 00E-05	7 63E-14	1 60E-04	3 30E-04	7.73E-08	2 86E+02	3 15E+07	3 63E-05
CM244	2 38E+03	11 5%	10%	68	5 99E+06	1.12E-05	1 87E-12	3.00E-05	1.04E-13	1.60E-04	3.30E-04	6 70E-05	2.48E+05	3 15E+07	4.30E-02
PU238	1 58E+03	11.5%	10%	68	5 99E+06	1.12E-05	1.87E-12	3 00E-05	6 93E-14	1 60E-04	3 30E-04	1.06E-04	3 92E+05	3.15E+07	4.52E-02
SB125	7.91E+02	11.5%	10%	68	5 99E+06	1.12E-05	1 87E-12	3.00E-05	3 47E-14	1 60E-04	3 30E-04	3 30E-09	1 22E+01	3.15E+07	7 05E-07
EU155	5 41E+02	11.5%	10%	68	5 99E+06	1.12E-05	1.87E-12	3.00E-05	2.37E-14	1 60E-04	3.30E-04	1.12E-08	4 14E+01	3.15E+07	1 64E-06
AM241	2.78E+02	11 5%	10%	68	5 99E+06	1.12E-05	1 87E-12	3 00E-05	1 22E-14	1 60E-04	3 30E-04	1 20E-04	4.44E+05	3.15E+07	9.01E-03
TE125M	1 93E+02	11.5%	10%	68	5 99E+06	1.12E-05	1 87E-12	3 00E-05	8 48E-15	1.60E-04	3 30E-04	1.97E-09	7 29E+00	3.15E+07	1 03E-07
PU240	1 50E+02	11 5%	10%	68	5 99E+06	1.12E-05	1 87E-12	3 00E-05	6 58E-15	1.60E-04	3 30E-04	1.16E-04	4 29E+05	3.15E+07	4.70E-03
SM151	9.76E+01	11 5%	10%	68	5.99E+06	1.12E-05	1.87E-12	3 00E-05	4.28E-15	1 60E-04	3.30E-04	8.10E-09	3.00E+01	3.15E+07	2.13E-07
PU239	6.70E+01	11 5%	10%	68	5 99E+06	1.12E-05	1 87E-12	3 00E-05	2 94E-15	1 60E-04	3 30E-04	1.16E-04	4.29E+05	3 15E+07	2.10E-03
BA137M	3 17E+04	11.5%	10%	68	5 99E+06	1.12E-05	1.87E-12	3 00E-05	1.39E-12	1 60E-04	3 30E-04	0.00E+00	0.00E+00	3.15E+07	0 00E+00
RH106	4.71E+03	11 5%	10%	68	5.99E+06	1.12E-05	1 87E-12	3 00E-05	2 07E-13	1 60E-04	3.30E-04	0 00E+00	0 00E+00	3.15E+07	0 00E+00
PR144M	3 48E+01	11.5%	10%	68	5 99E+06	1.12E-05	1.87E-12	3 00E-05	1 53E-15	1.60E-04	3.30E-04	0 00E+00	0 00E+00	3 15E+07	0 00E+00
AM243	1 36E+01	11 5%	10%	68	5.99E+06	1.12E-05	1 87E-12	3.00E-05	5 97E-16	1.60E-04	3.30E-04	1.19E-04	4 40E+05	3.15E+07	4 37E-04
CM242	9 82E+00	11 5%	10%	68	5 99E+06	1.12E-05	1 87E-12	3 00E-05	4 31E-16	1.60E-04	3 30E-04	4.67E-06	1.73E+04	3.15E+07	1 24E-05
CM243	9 79E+00	11 5%	10%	68	5.99E+06	1.12E-05	1.87E-12	3 00E-05	4.29E-16	1 60E-04	3.30E-04	8 30E-05	3 07E+05	3 15E+07	2 19E-04
NP239	1.36E+01	11 5%	10%	68	5 99E+06	1.12E-05	1.87E-12	3 00E-05	5 97E-16	1 60E-04	3.30E-04	6 78E-10	2 51E+00	3.15E+07	2.49E-09
NP237	1.18E-01	11.5%	10%	68	5 99E+06	1.12E-05	1.87E-12	3 00E-05	5.18E-18	1.60E-04	3.30E-04	1 46E-04	5.40E+05	3.15E+07	4.65E-06
PU242	9 04E-01	11.5%	10%	68	5 99E+06	1.12E-05	1 87E-12	3 00E-05	3.97E-17	1 60E-04	3.30E-04	1.11E-04	4.11E+05	3.15E+07	2.71E-05
AM242	2.71E+00	11.5%	10%	68	5.99E+06	1.12E-05	1 87E-12	3.00E-05	1.19E-16	1 60E-04	3 30E-04	1 58E-08	5.85E+01	3.15E+07	1.16E-08
AM242M	2 72E+00	11 5%	10%	68	5.99E+06	1.12E-05	1 87E-12	3.00E-05	1.19E-16	1.60E-04	3 30E-04	1.15E-04	4 26E+05	3 15E+07	8 44E-05
														Total	7.32E-01

MPC-68														
Accident Conditions														
Committed Dose Equivalent From Inhalation														
Nuclide	Inventory (Ci/Assy)	% remain airborne	No. Assy	MPC Vol (cm3)	L_{acc} Rate at Upstream (cm3/s)	Fraction Released per sec	Release Fraction	Release Rate (Ci/sec)	X/Q (sec/m3)	Breathing Rate (m3/sec)	DCF (Sv/Bq)	DCF (mRem/uCi)	Occ Time (sec)	CDE (mRem)
								Gases						
H 3	1.24E+02	100%	68	5 99E+06	1.95E-05	3.26E-12	0.30	8.23E-09	8 00E-03	3.30E-04	1.73E-11	6 40E-02	2.59E+06	3 60E-03
I129	1.12E-02	100%	68	5.99E+06	1.95E-05	3 26E-12	0 30	7.45E-13	8.00E-03	3 30E-04	8 69E-11	3.22E-01	2.59E+06	1.64E-06
KR 85	2 04E+03	100%	68	5.99E+06	1 95E-05	3 26E-12	0 30	1.36E-07	8 00E-03	3.30E-04	0.00E+00	0 00E+00	2.59E+06	0.00E+00
								Crud						
Co-60	6 50E+01	100%	68	5 99E+06	1.95E-05	3 26E-12	1.00	1.44E-08	8 00E-03	3.30E-04	4.76E-09	1.76E+01	2.59E+06	1.74E+00
								Volatiles						
SR 90	2.24E+04	100%	68	5 99E+06	1 95E-05	3 26E-12	2.00E-04	9.93E-10	8 00E-03	3 30E-04	2 64E-09	9.77E+00	2.59E+06	6 63E-02
RU106	4.71E+03	100%	68	5 99E+06	1.95E-05	3 26E-12	2 00E-04	2.09E-10	8 00E-03	3.30E-04	1.38E-08	5.11E+01	2 59E+06	7.29E-02
CS134	1.18E+04	100%	68	5 99E+06	1.95E-05	3.26E-12	2 00E-04	5 23E-10	8 00E-03	3 30E-04	1 30E-08	4 81E+01	2 59E+06	1.72E-01
CS137	3 35E+04	100%	68	5.99E+06	1 95E-05	3 26E-12	2 00E-04	1 49E-09	8 00E-03	3.30E-04	8.76E-09	3.24E+01	2.59E+06	3.29E-01
								Fines						
PU241	2 58E+04	10%	68	5 99E+06	1.95E-05	3.26E-12	3 00E-05	1 72E-11	8 00E-03	3 30E-04	6 82E-07	2.52E+03	2.59E+06	2 96E-01
Y 90	2 24E+04	10%	68	5 99E+06	1.95E-05	3 26E-12	3.00E-05	1.49E-11	8 00E-03	3 30E-04	9 52E-12	3 52E-02	2.59E+06	3 59E-06
PM147	9 63E+03	10%	68	5 99E+06	1 95E-05	3 26E-12	3 00E-05	6.41E-12	8.00E-03	3.30E-04	1.88E-14	6.96E-05	2.59E+06	3 05E-09
CE144	2.48E+03	10%	68	5.99E+06	1.95E-05	3.26E-12	3 00E-05	1 65E-12	8 00E-03	3 30E-04	1.93E-09	7.14E+00	2.59E+06	8 05E-05
PR144	2 48E+03	10%	68	5.99E+06	1 95E-05	3.26E-12	3 00E-05	1 65E-12	8 00E-03	3.30E-04	2.41E-15	8 92E-06	2 59E+06	1.01E-10
EU154	1.74E+03	10%	68	5 99E+06	1.95E-05	3.26E-12	3.00E-05	1.16E-12	8 00E-03	3 30E-04	1.17E-08	4 33E+01	2.59E+06	3 43E-04
CM244	2 38E+03	10%	68	5.99E+06	1 95E-05	3 26E-12	3 00E-05	1.58E-12	8.00E-03	3 30E-04	1.59E-05	5 88E+04	2.59E+06	6.37E-01
PU238	1 58E+03	10%	68	5.99E+06	1 95E-05	3 26E-12	3 00E-05	1.05E-12	8 00E-03	3.30E-04	2 80E-05	1.04E+05	2.59E+06	7.44E-01
SB125	7 91E+02	10%	68	5 99E+06	1.95E-05	3 26E-12	3 00E-05	5 26E-13	8 00E-03	3 30E-04	3 60E-10	1 33E+00	2.59E+06	4.79E-06
EU155	5.41E+02	10%	68	5 99E+06	1.95E-05	3 26E-12	3 00E-05	3 60E-13	8.00E-03	3.30E-04	3.56E-10	1.32E+00	2.59E+06	3 24E-06
AM241	2 78E+02	10%	68	5 99E+06	1 95E-05	3 26E-12	3 00E-05	1.85E-13	8 00E-03	3 30E-04	3 25E-05	1.20E+05	2 59E+06	1.52E-01
TE125M	1.93E+02	10%	68	5.99E+06	1.95E-05	3.26E-12	3 00E-05	1 29E-13	8 00E-03	3 30E-04	1.24E-10	4.59E-01	2.59E+06	4.04E-07
PU240	1.50E+02	10%	68	5 99E+06	1.95E-05	3 26E-12	3.00E-05	9 98E-14	8.00E-03	3.30E-04	3.18E-05	1.18E+05	2.59E+06	8.03E-02
SM151	9.76E+01	10%	68	5.99E+06	1.95E-05	3.26E-12	3.00E-05	6 49E-14	8 00E-03	3 30E-04	4 03E-14	1.49E-04	2.59E+06	6 62E-11
PU239	6 70E+01	10%	68	5.99E+06	1.95E-05	3.26E-12	3 00E-05	4 46E-14	8 00E-03	3.30E-04	3.18E-05	1.18E+05	2.59E+06	3 59E-02
BA137M	3.17E+04	10%	68	5 99E+06	1.95E-05	3 26E-12	3 00E-05	2.11E-11	8.00E-03	3.30E-04	0 00E+00	0 00E+00	2.59E+06	0 00E+00
RH106	4.71E+03	10%	68	5.99E+06	1.95E-05	3 26E-12	3.00E-05	3.13E-12	8 00E-03	3 30E-04	0 00E+00	0.00E+00	2.59E+06	0 00E+00
PR144M	3 48E+01	10%	68	5 99E+06	1.95E-05	3.26E-12	3.00E-05	2.31E-14	8 00E-03	3 30E-04	0 00E+00	0 00E+00	2 59E+06	0 00E+00
AM243	1.36E+01	10%	68	5.99E+06	1.95E-05	3 26E-12	3 00E-05	9 05E-15	8 00E-03	3.30E-04	3.26E-05	1.21E+05	2.59E+06	7.46E-03
CM242	9.82E+00	10%	68	5 99E+06	1 95E-05	3.26E-12	3 00E-05	6 53E-15	8 00E-03	3.30E-04	5.70E-07	2.11E+03	2.59E+06	9.42E-05
CM243	9.79E+00	10%	68	5.99E+06	1.95E-05	3 26E-12	3 00E-05	6.51E-15	8 00E-03	3.30E-04	2.07E-05	7.66E+04	2.59E+06	3.41E-03
NP239	1 36E+01	10%	68	5 99E+06	1 95E-05	3.26E-12	3 00E-05	9.05E-15	8.00E-03	3 30E-04	7.45E-11	2.76E-01	2.59E+06	1.70E-08
NP237	1.18E-01	10%	68	5 99E+06	1.95E-05	3 26E-12	3 00E-05	7.85E-17	8.00E-03	3.30E-04	2.96E-05	1.10E+05	2.59E+06	5 88E-05
PU242	9 04E-01	10%	68	5 99E+06	1.95E-05	3.26E-12	3.00E-05	6.01E-16	8.00E-03	3 30E-04	3 02E-05	1.12E+05	2.59E+06	4.59E-04
AM242	2.71E+00	10%	68	5.99E+06	1.95E-05	3 26E-12	3 00E-05	1.80E-15	8.00E-03	3 30E-04	1.94E-09	7.18E+00	2.59E+06	8 85E-08
AM242M	2.72E+00	10%	68	5.99E+06	1.95E-05	3.26E-12	3.00E-05	1.81E-15	8 00E-03	3.30E-04	3.21E-05	1.19E+05	2.59E+06	1.47E-03
													Total	4.34E+00

MPC-68														
Accident Conditions														
Committed Dose Equivalent From Inhalation														
Nuclide	Inventory (Ci/Assy)	% remain airborne	No Assy	MPC Vol (cm3)	L_{acc} Rate at Upstream (cm3/s)	Fraction Released per sec	Release Fraction	Release Rate (Ci/sec)	X/Q (sec/m3)	Breathing Rate (m3/sec)	DCF (Sv/Bq)	DCF (mRem/uCi)	Occ Time (sec)	CDE (mRem)
								Gases						
H 3	1 24E+02	100%	68	5.99E+06	1 95E-05	3.26E-12	0 30	8.23E-09	8 00E-03	3 30E-04	1.73E-11	6.40E-02	2 59E+06	3 60E-03
I129	1.12E-02	100%	68	5 99E+06	1.95E-05	3 26E-12	0 30	7.45E-13	8 00E-03	3.30E-04	2.09E-10	7.73E-01	2 59E+06	3 94E-06
KR 85	2 04E+03	100%	68	5 99E+06	1 95E-05	3 26E-12	0.30	1 36E-07	8.00E-03	3.30E-04	0 00E+00	0 00E+00	2 59E+06	0.00E+00
								Crud						
Co-60	6.50E+01	100%	68	5 99E+06	1.95E-05	3 26E-12	1.00	1 44E-08	8.00E-03	3 30E-04	1 84E-08	6 81E+01	2 59E+06	6.71E+00
								Volatiles						
SR 90	2.24E+04	100%	68	5 99E+06	1.95E-05	3 26E-12	2.00E-04	9.93E-10	8.00E-03	3 30E-04	2 64E-09	9.77E+00	2.59E+06	6.63E-02
RU106	4.71E+03	100%	68	5 99E+06	1 95E-05	3 26E-12	2.00E-04	2.09E-10	8 00E-03	3 30E-04	1.37E-08	5 07E+01	2.59E+06	7.24E-02
CS134	1 18E+04	100%	68	5 99E+06	1.95E-05	3 26E-12	2 00E-04	5 23E-10	8 00E-03	3 30E-04	1 08E-08	4.00E+01	2.59E+06	1.43E-01
CS137	3 35E+04	100%	68	5 99E+06	1.95E-05	3 26E-12	2.00E-04	1.49E-09	8 00E-03	3 30E-04	7 84E-09	2.90E+01	2 59E+06	2 95E-01
								Fines						
PU241	2 58E+04	10%	68	5 99E+06	1.95E-05	3 26E-12	3.00E-05	1 72E-11	8.00E-03	3 30E-04	3 06E-11	1.13E-01	2 59E+06	1.33E-05
Y 90	2 24E+04	10%	68	5 99E+06	1 95E-05	3 26E-12	3.00E-05	1.49E-11	8 00E-03	3.30E-04	9.52E-12	3 52E-02	2.59E+06	3.59E-06
PM147	9 63E+03	10%	68	5 99E+06	1.95E-05	3 26E-12	3.00E-05	6 41E-12	8 00E-03	3 30E-04	3 60E-14	1 33E-04	2 59E+06	5.83E-09
CE144	2.48E+03	10%	68	5.99E+06	1.95E-05	3 26E-12	3 00E-05	1.65E-12	8 00E-03	3.30E-04	1.97E-09	7.29E+00	2.59E+06	8 22E-05
PR144	2.48E+03	10%	68	5 99E+06	1.95E-05	3 26E-12	3.00E-05	1.65E-12	8.00E-03	3.30E-04	1.05E-14	3 89E-05	2.59E+06	4 38E-10
EU154	1 74E+03	10%	68	5 99E+06	1 95E-05	3 26E-12	3 00E-05	1.16E-12	8 00E-03	3 30E-04	1.55E-08	5.74E+01	2 59E+06	4.54E-04
CM244	2.38E+03	10%	68	5.99E+06	1.95E-05	3 26E-12	3.00E-05	1.58E-12	8.00E-03	3 30E-04	1 04E-09	3.85E+00	2.59E+06	4 17E-05
PU238	1 58E+03	10%	68	5.99E+06	1 95E-05	3.26E-12	3 00E-05	1.05E-12	8 00E-03	3 30E-04	1.00E-09	3.70E+00	2 59E+06	2.66E-05
SB125	7 91E+02	10%	68	5 99E+06	1.95E-05	3 26E-12	3 00E-05	5 26E-13	8 00E-03	3 30E-04	4 16E-10	1 54E+00	2 59E+06	5 54E-06
EU155	5 41E+02	10%	68	5.99E+06	1 95E-05	3 26E-12	3.00E-05	3 60E-13	8 00E-03	3 30E-04	6.14E-10	2 27E+00	2 59E+06	5 59E-06
AM241	2.78E+02	10%	68	5.99E+06	1 95E-05	3.26E-12	3 00E-05	1 85E-13	8 00E-03	3 30E-04	2 67E-09	9.88E+00	2.59E+06	1 25E-05
TE125M	1.93E+02	10%	68	5.99E+06	1 95E-05	3 26E-12	3 00E-05	1.29E-13	8 00E-03	3 30E-04	1.07E-10	3 96E-01	2 59E+06	3.48E-07
PU240	1 50E+02	10%	68	5 99E+06	1 95E-05	3 26E-12	3 00E-05	9.98E-14	8.00E-03	3.30E-04	9 51E-10	3.52E+00	2 59E+06	2.40E-06
SM151	9 76E+01	10%	68	5.99E+06	1.95E-05	3.26E-12	3.00E-05	6.49E-14	8.00E-03	3.30E-04	1.49E-13	5 51E-04	2 59E+06	2.45E-10
PU239	6 70E+01	10%	68	5.99E+06	1.95E-05	3 26E-12	3.00E-05	4.46E-14	8 00E-03	3 30E-04	9.22E-10	3.41E+00	2.59E+06	1 04E-06
BA137M	3.17E+04	10%	68	5.99E+06	1 95E-05	3.26E-12	3.00E-05	2.11E-11	8 00E-03	3.30E-04	0.00E+00	0.00E+00	2 59E+06	0.00E+00
RH106	4.71E+03	10%	68	5.99E+06	1 95E-05	3.26E-12	3.00E-05	3.13E-12	8.00E-03	3.30E-04	0 00E+00	0.00E+00	2 59E+06	0.00E+00
PR144M	3 48E+01	10%	68	5.99E+06	1.95E-05	3.26E-12	3 00E-05	2.31E-14	8 00E-03	3 30E-04	0 00E+00	0 00E+00	2.59E+06	0 00E+00
AM243	1.36E+01	10%	68	5.99E+06	1.95E-05	3 26E-12	3 00E-05	9.05E-15	8 00E-03	3.30E-04	1.52E-08	5 62E+01	2 59E+06	3 48E-06
CM242	9 82E+00	10%	68	5 99E+06	1 95E-05	3.26E-12	3.00E-05	6 53E-15	8 00E-03	3 30E-04	9 44E-10	3.49E+00	2 59E+06	1 56E-07
CM243	9.79E+00	10%	68	5 99E+06	1.95E-05	3 26E-12	3 00E-05	6.51E-15	8 00E-03	3.30E-04	6 29E-09	2 33E+01	2.59E+06	1 04E-06
NP239	1 36E+01	10%	68	5.99E+06	1 95E-05	3 26E-12	3 00E-05	9 05E-15	8 00E-03	3 30E-04	1 63E-11	6.03E-02	2 59E+06	3.73E-09
NP237	1.18E-01	10%	68	5.99E+06	1.95E-05	3 26E-12	3 00E-05	7.85E-17	8 00E-03	3.30E-04	1 69E-08	6.25E+01	2 59E+06	3.36E-08
PU242	9 04E-01	10%	68	5.99E+06	1 95E-05	3 26E-12	3.00E-05	6 01E-16	8 00E-03	3.30E-04	9 45E-10	3.50E+00	2 59E+06	1.44E-08
AM242	2 71E+00	10%	68	5 99E+06	1 95E-05	3.26E-12	3 00E-05	1.80E-15	8.00E-03	3 30E-04	2.94E-12	1.09E-02	2.59E+06	1.34E-10
AM242M	2 72E+00	10%	68	5 99E+06	1.95E-05	3 26E-12	3 00E-05	1.81E-15	8 00E-03	3 30E-04	1 38E-09	5.11E+00	2.59E+06	6 32E-08
													Total	7 29E+00

MPC-68														
Accident Conditions														
Committed Dose Equivalent From Inhalation														
Nuclide	Inventory (Ci/Assy)	% remain airborne	No. Assy	MPC Vol (cm3)	L_{acc} Rate at Upstream (cm3/s)	Fraction Released per sec	Release Fraction	Release Rate (Ci/sec)	X/Q (sec/m3)	Breathing Rate (m3/sec)	DCF (Sv/Bq)	DCF (mRem/uCi)	Occ Time (sec)	CDE (mRem)
								Gases						
H 3	1 24E+02	100%	68	5 99E+06	1.95E-05	3 26E-12	0 30	8.23E-09	8.00E-03	3.30E-04	1.73E-11	6 40E-02	2.59E+06	3 60E-03
I129	1 12E-02	100%	68	5.99E+06	1 95E-05	3.26E-12	0 30	7.45E-13	8.00E-03	3 30E-04	3 14E-10	1.16E+00	2.59E+06	5.92E-06
KR 85	2.04E+03	100%	68	5 99E+06	1.95E-05	3.26E-12	0 30	1 36E-07	8 00E-03	3.30E-04	0 00E+00	0 00E+00	2.59E+06	0 00E+00
								Crud						
Co-60	6.50E+01	100%	68	5 99E+06	1.95E-05	3.26E-12	1 00	1.44E-08	8 00E-03	3.30E-04	3.45E-07	1.28E+03	2 59E+06	1 26E+02
								Volatiles						
SR 90	2.24E+04	100%	68	5 99E+06	1.95E-05	3.26E-12	2 00E-04	9 93E-10	8 00E-03	3 30E-04	2 86E-06	1 06E+04	2 59E+06	7.19E+01
RU106	4.71E+03	100%	68	5.99E+06	1 95E-05	3.26E-12	2 00E-04	2 09E-10	8 00E-03	3.30E-04	1.04E-06	3 85E+03	2.59E+06	5 50E+00
CS134	1.18E+04	100%	68	5 99E+06	1.95E-05	3.26E-12	2.00E-04	5.23E-10	8 00E-03	3.30E-04	1.18E-08	4 37E+01	2.59E+06	1.56E-01
CS137	3.35E+04	100%	68	5 99E+06	1.95E-05	3.26E-12	2 00E-04	1.49E-09	8 00E-03	3 30E-04	8 82E-09	3 26E+01	2 59E+06	3 31E-01
								Fines						
PU241	2.58E+04	10%	68	5 99E+06	1.95E-05	3.26E-12	3 00E-05	1.72E-11	8.00E-03	3 30E-04	3.18E-06	1.18E+04	2.59E+06	1.38E+00
Y 90	2.24E+04	10%	68	5 99E+06	1.95E-05	3 26E-12	3.00E-05	1.49E-11	8 00E-03	3.30E-04	9 31E-09	3.44E+01	2.59E+06	3 51E-03
PM147	9.63E+03	10%	68	5 99E+06	1.95E-05	3 26E-12	3 00E-05	6 41E-12	8 00E-03	3.30E-04	7.74E-08	2 86E+02	2.59E+06	1 25E-02
CE144	2 48E+03	10%	68	5.99E+06	1.95E-05	3.26E-12	3.00E-05	1 65E-12	8 00E-03	3.30E-04	7.91E-07	2 93E+03	2.59E+06	3.30E-02
PR144	2.48E+03	10%	68	5.99E+06	1.95E-05	3.26E-12	3 00E-05	1 65E-12	8 00E-03	3 30E-04	9 40E-11	3 48E-01	2.59E+06	3 92E-06
EU154	1.74E+03	10%	68	5.99E+06	1.95E-05	3 26E-12	3 00E-05	1.16E-12	8.00E-03	3.30E-04	7.92E-08	2.93E+02	2.59E+06	2.32E-03
CM244	2.38E+03	10%	68	5.99E+06	1.95E-05	3 26E-12	3 00E-05	1.58E-12	8 00E-03	3 30E-04	1.93E-05	7.14E+04	2.59E+06	7.73E-01
PU238	1.58E+03	10%	68	5.99E+06	1.95E-05	3 26E-12	3 00E-05	1 05E-12	8 00E-03	3.30E-04	3 20E-04	1.18E+06	2.59E+06	8 51E+00
SB125	7.91E+02	10%	68	5 99E+06	1.95E-05	3.26E-12	3.00E-05	5 26E-13	8 00E-03	3.30E-04	2.17E-08	8 03E+01	2.59E+06	2 89E-04
EU155	5.41E+02	10%	68	5.99E+06	1 95E-05	3 26E-12	3 00E-05	3 60E-13	8.00E-03	3.30E-04	1.19E-08	4.40E+01	2.59E+06	1.08E-04
AM241	2.78E+02	10%	68	5 99E+06	1.95E-05	3.26E-12	3 00E-05	1 85E-13	8.00E-03	3 30E-04	1 84E-05	6 81E+04	2.59E+06	8 61E-02
TE125M	1.93E+02	10%	68	5.99E+06	1 95E-05	3 26E-12	3 00E-05	1 29E-13	8 00E-03	3 30E-04	1.04E-08	3 85E+01	2.59E+06	3 38E-05
PU240	1.50E+02	10%	68	5 99E+06	1.95E-05	3 26E-12	3 00E-05	9.98E-14	8.00E-03	3.30E-04	3.23E-04	1.20E+06	2.59E+06	8.15E-01
SM151	9.76E+01	10%	68	5 99E+06	1.95E-05	3.26E-12	3 00E-05	6 49E-14	8 00E-03	3.30E-04	3 26E-09	1 21E+01	2.59E+06	5.35E-06
PU239	6 70E+01	10%	68	5 99E+06	1 95E-05	3 26E-12	3 00E-05	4.46E-14	8 00E-03	3.30E-04	3.23E-04	1.20E+06	2.59E+06	3 64E-01
BA137M	3.17E+04	10%	68	5 99E+06	1 95E-05	3.26E-12	3.00E-05	2.11E-11	8 00E-03	3.30E-04	0.00E+00	0.00E+00	2.59E+06	0.00E+00
RH106	4.71E+03	10%	68	5.99E+06	1.95E-05	3.26E-12	3 00E-05	3.13E-12	8 00E-03	3.30E-04	0 00E+00	0.00E+00	2.59E+06	0 00E+00
PR144M	3 48E+01	10%	68	5 99E+06	1.95E-05	3 26E-12	3 00E-05	2.31E-14	8.00E-03	3.30E-04	0.00E+00	0 00E+00	2 59E+06	0.00E+00
AM243	1.36E+01	10%	68	5 99E+06	1.95E-05	3.26E-12	3 00E-05	9 05E-15	8 00E-03	3 30E-04	1.78E-05	6 59E+04	2.59E+06	4 07E-03
CM242	9 82E+00	10%	68	5 99E+06	1.95E-05	3.26E-12	3 00E-05	6.53E-15	8.00E-03	3 30E-04	1.55E-05	5.74E+04	2.59E+06	2.56E-03
CM243	9 79E+00	10%	68	5.99E+06	1.95E-05	3.26E-12	3 00E-05	6 51E-15	8 00E-03	3.30E-04	1.94E-05	7.18E+04	2 59E+06	3.20E-03
NP239	1.36E+01	10%	68	5 99E+06	1.95E-05	3.26E-12	3 00E-05	9 05E-15	8 00E-03	3 30E-04	2.36E-09	8 73E+00	2 59E+06	5 40E-07
NP237	1.18E-01	10%	68	5.99E+06	1.95E-05	3.26E-12	3 00E-05	7 85E-17	8 00E-03	3.30E-04	1.61E-05	5 96E+04	2.59E+06	3.20E-05
PU242	9 04E-01	10%	68	5.99E+06	1.95E-05	3 26E-12	3 00E-05	6 01E-16	8 00E-03	3.30E-04	3.07E-04	1.14E+06	2.59E+06	4.67E-03
AM242	2.71E+00	10%	68	5 99E+06	1 95E-05	3 26E-12	3 00E-05	1.80E-15	8 00E-03	3.30E-04	5.20E-08	1.92E+02	2.59E+06	2.37E-06
AM242M	2 72E+00	10%	68	5.99E+06	1.95E-05	3 26E-12	3 00E-05	1 81E-15	8 00E-03	3.30E-04	4.20E-06	1.55E+04	2.59E+06	1.92E-04
													Total	2.16E+02

MPC-68														
Accident Conditions														
Committed Dose Equivalent From Inhalation														
Nuclide	Inventory (Ci/Assy)	% remain airborne	No Assy	MPC Vol (cm3)	L_{acc} Rate at Upstream (cm3/s)	Fraction Released per sec	Release Fraction	Release Rate (Ci/sec)	X/Q (sec/m3)	Breathing Rate (m3/sec)	DCF (Sv/Bq)	DCF (mRem/uCi)	Occ Time (sec)	CDE (mRem)
								Gases						
H 3	1 24E+02	100%	68	5 99E+06	1 95E-05	3 26E-12	0 30	8.23E-09	8 00E-03	3 30E-04	1.73E-11	6 40E-02	2 59E+06	3.60E-03
I129	1 12E-02	100%	68	5 99E+06	1.95E-05	3.26E-12	0 30	7 45E-13	8 00E-03	3 30E-04	1 40E-10	5 18E-01	2.59E+06	2.64E-06
KR 85	2 04E+03	100%	68	5 99E+06	1.95E-05	3 26E-12	0 30	1.36E-07	8 00E-03	3 30E-04	0 00E+00	0.00E+00	2 59E+06	0 00E+00
								Crud						
Co-60	6 50E+01	100%	68	5 99E+06	1.95E-05	3 26E-12	1 00	1.44E-08	8 00E-03	3 30E-04	1.72E-08	6 36E+01	2.59E+06	6 27E+00
								Volatiles						
SR 90	2 24E+04	100%	68	5 99E+06	1.95E-05	3 26E-12	2.00E-04	9.93E-10	8 00E-03	3 30E-04	3 36E-07	1.24E+03	2.59E+06	8.44E+00
RU106	4 71E+03	100%	68	5 99E+06	1.95E-05	3.26E-12	2 00E-04	2 09E-10	8 00E-03	3 30E-04	1.37E-08	5 07E+01	2.59E+06	7 24E-02
CS134	1.18E+04	100%	68	5 99E+06	1 95E-05	3.26E-12	2 00E-04	5 23E-10	8 00E-03	3 30E-04	1.18E-08	4.37E+01	2.59E+06	1.56E-01
CS137	3.35E+04	100%	68	5.99E+06	1.95E-05	3.26E-12	2 00E-04	1.49E-09	8 00E-03	3 30E-04	8 30E-09	3 07E+01	2.59E+06	3.12E-01
								Fines						
PU241	2.58E+04	10%	68	5 99E+06	1.95E-05	3 26E-12	3 00E-05	1.72E-11	8 00E-03	3.30E-04	3 36E-06	1.24E+04	2.59E+06	1.46E+00
Y 90	2 24E+04	10%	68	5 99E+06	1.95E-05	3 26E-12	3 00E-05	1 49E-11	8 00E-03	3 30E-04	2.79E-10	1 03E+00	2.59E+06	1 05E-04
PM147	9 63E+03	10%	68	5.99E+06	1.95E-05	3.26E-12	3.00E-05	6 41E-12	8 00E-03	3.30E-04	8 16E-09	3.02E+01	2 59E+06	1.32E-03
CE144	2.48E+03	10%	68	5 99E+06	1.95E-05	3 26E-12	3 00E-05	1 65E-12	8.00E-03	3 30E-04	2 67E-08	9 88E+01	2 59E+06	1.11E-03
PR144	2 48E+03	10%	68	5 99E+06	1.95E-05	3.26E-12	3 00E-05	1 65E-12	8 00E-03	3 30E-04	8.08E-14	2 99E-04	2 59E+06	3.37E-09
EU154	1 74E+03	10%	68	5 99E+06	1 95E-05	3.26E-12	3 00E-05	1.16E-12	8 00E-03	3 30E-04	1.06E-07	3.92E+02	2 59E+06	3 10E-03
CM244	2 38E+03	10%	68	5 99E+06	1.95E-05	3.26E-12	3.00E-05	1.58E-12	8.00E-03	3 30E-04	9 38E-05	3.47E+05	2.59E+06	3.76E+00
PU238	1 58E+03	10%	68	5.99E+06	1.95E-05	3.26E-12	3 00E-05	1 05E-12	8 00E-03	3.30E-04	1.52E-04	5 62E+05	2.59E+06	4 04E+00
SB125	7.91E+02	10%	68	5.99E+06	1.95E-05	3 26E-12	3.00E-05	5.26E-13	8 00E-03	3.30E-04	6.49E-10	2 40E+00	2.59E+06	8.64E-06
EU155	5 41E+02	10%	68	5 99E+06	1.95E-05	3.26E-12	3 00E-05	3 60E-13	8 00E-03	3.30E-04	1.43E-08	5 29E+01	2.59E+06	1.30E-04
AM241	2.78E+02	10%	68	5.99E+06	1.95E-05	3.26E-12	3.00E-05	1.85E-13	8.00E-03	3.30E-04	1.74E-04	6 44E+05	2.59E+06	8.14E-01
TE125M	1.93E+02	10%	68	5 99E+06	1.95E-05	3 26E-12	3 00E-05	1.29E-13	8.00E-03	3 30E-04	3 01E-09	1.11E+01	2.59E+06	9 80E-06
PU240	1 50E+02	10%	68	5 99E+06	1 95E-05	3 26E-12	3.00E-05	9.98E-14	8 00E-03	3.30E-04	1.69E-04	6 25E+05	2.59E+06	4.27E-01
SM151	9.76E+01	10%	68	5.99E+06	1.95E-05	3.26E-12	3 00E-05	6 49E-14	8.00E-03	3.30E-04	1.10E-08	4 07E+01	2.59E+06	1 81E-05
PU239	6 70E+01	10%	68	5 99E+06	1 95E-05	3 26E-12	3.00E-05	4.46E-14	8 00E-03	3 30E-04	1.69E-04	6 25E+05	2 59E+06	1 91E-01
BA137M	3 17E+04	10%	68	5.99E+06	1.95E-05	3 26E-12	3 00E-05	2 11E-11	8 00E-03	3 30E-04	0 00E+00	0 00E+00	2.59E+06	0 00E+00
RH106	4.71E+03	10%	68	5 99E+06	1.95E-05	3.26E-12	3 00E-05	3.13E-12	8 00E-03	3.30E-04	0 00E+00	0 00E+00	2 59E+06	0.00E+00
PR144M	3 48E+01	10%	68	5 99E+06	1 95E-05	3 26E-12	3.00E-05	2.31E-14	8 00E-03	3 30E-04	0 00E+00	0 00E+00	2.59E+06	0 00E+00
AM243	1.36E+01	10%	68	5 99E+06	1 95E-05	3.26E-12	3 00E-05	9 05E-15	8.00E-03	3 30E-04	1.73E-04	6.40E+05	2.59E+06	3 96E-02
CM242	9 82E+00	10%	68	5 99E+06	1.95E-05	3 26E-12	3.00E-05	6.53E-15	8 00E-03	3.30E-04	3 90E-06	1.44E+04	2.59E+06	6 44E-04
CM243	9 79E+00	10%	68	5 99E+06	1 95E-05	3 26E-12	3.00E-05	6.51E-15	8 00E-03	3 30E-04	1.18E-04	4 37E+05	2.59E+06	1 94E-02
NP239	1 36E+01	10%	68	5 99E+06	1.95E-05	3 26E-12	3 00E-05	9.05E-15	8 00E-03	3.30E-04	2 08E-10	7.70E-01	2.59E+06	4.76E-08
NP237	1.18E-01	10%	68	5 99E+06	1 95E-05	3 26E-12	3.00E-05	7.85E-17	8 00E-03	3 30E-04	2.62E-04	9.69E+05	2.59E+06	5 20E-04
PU242	9 04E-01	10%	68	5 99E+06	1.95E-05	3 26E-12	3 00E-05	6 01E-16	8 00E-03	3.30E-04	1 61E-04	5 96E+05	2 59E+06	2 45E-03
AM242	2 71E+00	10%	68	5 99E+06	1.95E-05	3 26E-12	3 00E-05	1.80E-15	8 00E-03	3.30E-04	1 32E-08	4 88E+01	2.59E+06	6.02E-07
AM242M	2.72E+00	10%	68	5 99E+06	1.95E-05	3 26E-12	3 00E-05	1 81E-15	8 00E-03	3.30E-04	1.69E-04	6 25E+05	2 59E+06	7.74E-03
													Total	2 60E+01

MPC-68														
Accident Conditions														
Committed Dose Equivalent From Inhalation														
Nuclide	Inventory (Ci/Assy)	% remain airborne	No. Assy	MPC Vol (cm3)	L_{acc} Rate at Upstream (cm3/s)	Fraction Released per sec	Release Fraction	Release Rate (Ci/sec)	X/Q (sec/m3)	Breathing Rate (m3/sec)	DCF (Sv/Bq)	DCF (mRem/uCi)	Occ Time (sec)	CDE (mRem)
								Gases						
H 3	1 24E+02	100%	68	5 99E+06	1 95E-05	3.26E-12	0.30	8 23E-09	8.00E-03	3 30E-04	1.73E-11	6.40E-02	2 59E+06	3 60E-03
I129	1.12E-02	100%	68	5 99E+06	1.95E-05	3 26E-12	0 30	7.45E-13	8.00E-03	3.30E-04	1.38E-10	5.11E-01	2.59E+06	2.60E-06
KR 85	2 04E+03	100%	68	5.99E+06	1.95E-05	3.26E-12	0 30	1.36E-07	8 00E-03	3.30E-04	0 00E+00	0 00E+00	2.59E+06	0.00E+00
								Crud						
Co-60	6 50E+01	100%	68	5 99E+06	1.95E-05	3 26E-12	1.00	1.44E-08	8 00E-03	3.30E-04	1.35E-08	5 00E+01	2.59E+06	4.92E+00
								Volatiles						
SR 90	2 24E+04	100%	68	5.99E+06	1.95E-05	3 26E-12	2.00E-04	9 93E-10	8.00E-03	3.30E-04	7.27E-07	2.69E+03	2.59E+06	1.83E+01
RU106	4.71E+03	100%	68	5 99E+06	1.95E-05	3.26E-12	2.00E-04	2 09E-10	8 00E-03	3.30E-04	1 37E-08	5.07E+01	2.59E+06	7.24E-02
CS134	1.18E+04	100%	68	5 99E+06	1.95E-05	3.26E-12	2.00E-04	5 23E-10	8 00E-03	3.30E-04	1.10E-08	4.07E+01	2.59E+06	1 46E-01
CS137	3.35E+04	100%	68	5.99E+06	1.95E-05	3.26E-12	2.00E-04	1.49E-09	8.00E-03	3.30E-04	7.94E-09	2.94E+01	2.59E+06	2.98E-01
								Fines						
PU241	2 58E+04	10%	68	5 99E+06	1.95E-05	3 26E-12	3.00E-05	1.72E-11	8 00E-03	3.30E-04	4.20E-05	1.55E+05	2.59E+06	1.82E+01
Y 90	2.24E+04	10%	68	5 99E+06	1.95E-05	3 26E-12	3.00E-05	1.49E-11	8.00E-03	3.30E-04	2.78E-10	1.03E+00	2 59E+06	1.05E-04
PM147	9 63E+03	10%	68	5.99E+06	1.95E-05	3 26E-12	3 00E-05	6.41E-12	8 00E-03	3.30E-04	1 02E-07	3.77E+02	2.59E+06	1 65E-02
CE144	2 48E+03	10%	68	5.99E+06	1.95E-05	3.26E-12	3 00E-05	1.65E-12	8 00E-03	3.30E-04	4.54E-08	1 68E+02	2.59E+06	1.89E-03
PR144	2.48E+03	10%	68	5 99E+06	1.95E-05	3 26E-12	3.00E-05	1.65E-12	8 00E-03	3 30E-04	1.35E-13	5 00E-04	2 59E+06	5 63E-09
EU154	1 74E+03	10%	68	5 99E+06	1.95E-05	3 26E-12	3 00E-05	1.16E-12	8.00E-03	3 30E-04	5 23E-07	1.94E+03	2.59E+06	1.53E-02
CM244	2.38E+03	10%	68	5.99E+06	1.95E-05	3.26E-12	3.00E-05	1.58E-12	8 00E-03	3.30E-04	1.17E-03	4.33E+06	2.59E+06	4.69E+01
PU238	1.58E+03	10%	68	5 99E+06	1.95E-05	3 26E-12	3.00E-05	1.05E-12	8.00E-03	3.30E-04	1.90E-03	7 03E+06	2.59E+06	5.05E+01
SB125	7.91E+02	10%	68	5 99E+06	1.95E-05	3 26E-12	3 00E-05	5.26E-13	8 00E-03	3.30E-04	2.73E-09	1.01E+01	2.59E+06	3 63E-05
EU155	5 41E+02	10%	68	5.99E+06	1.95E-05	3 26E-12	3.00E-05	3 60E-13	8.00E-03	3.30E-04	1.52E-07	5.62E+02	2 59E+06	1.38E-03
AM241	2.78E+02	10%	68	5 99E+06	1.95E-05	3.26E-12	3.00E-05	1.85E-13	8 00E-03	3.30E-04	2.17E-03	8 03E+06	2.59E+06	1.02E+01
TE125M	1.93E+02	10%	68	5.99E+06	1.95E-05	3 26E-12	3 00E-05	1.29E-13	8.00E-03	3.30E-04	3 21E-08	1.19E+02	2.59E+06	1.04E-04
PU240	1.50E+02	10%	68	5.99E+06	1.95E-05	3.26E-12	3 00E-05	9 98E-14	8 00E-03	3.30E-04	2.11E-03	7.81E+06	2.59E+06	5.33E+00
SM151	9 76E+01	10%	68	5.99E+06	1 95E-05	3.26E-12	3 00E-05	6.49E-14	8 00E-03	3.30E-04	1.38E-07	5.11E+02	2.59E+06	2.27E-04
PU239	6.70E+01	10%	68	5.99E+06	1.95E-05	3.26E-12	3 00E-05	4.46E-14	8.00E-03	3.30E-04	2.11E-03	7.81E+06	2.59E+06	2 38E+00
BA137M	3.17E+04	10%	68	5 99E+06	1.95E-05	3 26E-12	3.00E-05	2.11E-11	8 00E-03	3 30E-04	0 00E+00	0.00E+00	2 59E+06	0 00E+00
RH106	4 71E+03	10%	68	5.99E+06	1 95E-05	3.26E-12	3 00E-05	3.13E-12	8 00E-03	3 30E-04	0.00E+00	0.00E+00	2.59E+06	0 00E+00
PR144M	3 48E+01	10%	68	5 99E+06	1.95E-05	3 26E-12	3 00E-05	2.31E-14	8 00E-03	3.30E-04	0 00E+00	0.00E+00	2.59E+06	0 00E+00
AM243	1.36E+01	10%	68	5.99E+06	1.95E-05	3 26E-12	3 00E-05	9 05E-15	8 00E-03	3.30E-04	2.17E-03	8 03E+06	2 59E+06	4.97E-01
CM242	9 82E+00	10%	68	5.99E+06	1.95E-05	3 26E-12	3 00E-05	6.53E-15	8 00E-03	3.30E-04	4 87E-05	1 80E+05	2.59E+06	8.05E-03
CM243	9.79E+00	10%	68	5 99E+06	1.95E-05	3.26E-12	3 00E-05	6.51E-15	8 00E-03	3.30E-04	1.47E-03	5.44E+06	2 59E+06	2.42E-01
NP239	1.36E+01	10%	68	5 99E+06	1.95E-05	3.26E-12	3 00E-05	9 05E-15	8 00E-03	3 30E-04	2.03E-09	7.51E+00	2.59E+06	4 65E-07
NP237	1.18E-01	10%	68	5 99E+06	1 95E-05	3.26E-12	3 00E-05	7.85E-17	8.00E-03	3 30E-04	3.27E-03	1.21E+07	2.59E+06	6 49E-03
PU242	9 04E-01	10%	68	5 99E+06	1.95E-05	3.26E-12	3 00E-05	6.01E-16	8 00E-03	3.30E-04	2.01E-03	7.44E+06	2.59E+06	3.06E-02
AM242	2.71E+00	10%	68	5.99E+06	1.95E-05	3 26E-12	3 00E-05	1.80E-15	8 00E-03	3.30E-04	1.65E-07	6.11E+02	2.59E+06	7.52E-06
AM242M	2.72E+00	10%	68	5 99E+06	1.95E-05	3 26E-12	3.00E-05	1.81E-15	8 00E-03	3.30E-04	2.12E-03	7.84E+06	2.59E+06	9.70E-02
													Total	1.58E+02

MPC-68														
Accident Conditions														
Committed Dose Equivalent From Inhalation														
Nuclide	Inventory (Ci/Assy)	% remain airborne	No. Assy	MPC Vol (cm3)	L_{acc} Rate at Upstream (cm3/s)	Fraction Released per sec	Release Fraction	Release Rate (Ci/sec)	X/Q (sec/m3)	Breathing Rate (m3/sec)	DCF (Sv/Bq)	DCF (mRem/uCi)	Occ Time (sec)	CDE (mRem)
								Gases						
H 3	1 24E+02	100%	68	5 99E+06	1.95E-05	3 26E-12	0.30	8 23E-09	8 00E-03	3 30E-04	1 73E-11	6.40E-02	2 59E+06	3 60E-03
I129	1.12E-02	100%	68	5 99E+06	1.95E-05	3.26E-12	0 30	7.45E-13	8 00E-03	3 30E-04	1 56E-06	5 77E+03	2.59E+06	2 94E-02
KR 85	2 04E+03	100%	68	5 99E+06	1.95E-05	3 26E-12	0 30	1.36E-07	8 00E-03	3.30E-04	0.00E+00	0.00E+00	2 59E+06	0.00E+00
								Crud						
Co-60	6.50E+01	100%	68	5 99E+06	1.95E-05	3.26E-12	1.00	1.44E-08	8 00E-03	3.30E-04	1.62E-08	5 99E+01	2.59E+06	5 91E+00
								Volatiles						
SR 90	2 24E+04	100%	68	5 99E+06	1.95E-05	3 26E-12	2.00E-04	9 93E-10	8 00E-03	3 30E-04	2.64E-09	9.77E+00	2 59E+06	6.63E-02
RU106	4 71E+03	100%	68	5 99E+06	1.95E-05	3 26E-12	2.00E-04	2 09E-10	8 00E-03	3.30E-04	1.37E-08	5.07E+01	2 59E+06	7.24E-02
CS134	1 18E+04	100%	68	5.99E+06	1 95E-05	3 26E-12	2 00E-04	5 23E-10	8.00E-03	3.30E-04	1.11E-08	4.11E+01	2.59E+06	1.47E-01
CS137	3 35E+04	100%	68	5 99E+06	1.95E-05	3 26E-12	2.00E-04	1.49E-09	8.00E-03	3 30E-04	7.93E-09	2.93E+01	2 59E+06	2 98E-01
								Fines						
PU241	2 58E+04	10%	68	5 99E+06	1.95E-05	3 26E-12	3.00E-05	1.72E-11	8 00E-03	3.30E-04	1.24E-11	4.59E-02	2 59E+06	5.38E-06
Y 90	2 24E+04	10%	68	5 99E+06	1.95E-05	3 26E-12	3.00E-05	1 49E-11	8.00E-03	3 30E-04	9 52E-12	3.52E-02	2 59E+06	3.59E-06
PM147	9 63E+03	10%	68	5.99E+06	1 95E-05	3.26E-12	3 00E-05	6.41E-12	8 00E-03	3 30E-04	1 98E-14	7 33E-05	2.59E+06	3 21E-09
CE144	2 48E+03	10%	68	5 99E+06	1.95E-05	3 26E-12	3 00E-05	1 65E-12	8 00E-03	3 30E-04	1 88E-09	6 96E+00	2 59E+06	7.85E-05
PR144	2 48E+03	10%	68	5.99E+06	1 95E-05	3 26E-12	3 00E-05	1.65E-12	8 00E-03	3.30E-04	8 47E-15	3 13E-05	2 59E+06	3 53E-10
EU154	1 74E+03	10%	68	5 99E+06	1 95E-05	3 26E-12	3 00E-05	1.16E-12	8 00E-03	3 30E-04	7 14E-09	2.64E+01	2 59E+06	2.09E-04
CM244	2.38E+03	10%	68	5 99E+06	1.95E-05	3 26E-12	3 00E-05	1.58E-12	8 00E-03	3.30E-04	1.01E-09	3 74E+00	2.59E+06	4 04E-05
PU238	1 58E+03	10%	68	5 99E+06	1.95E-05	3 26E-12	3.00E-05	1 05E-12	8 00E-03	3.30E-04	9 62E-10	3 56E+00	2 59E+06	2 56E-05
SB125	7.91E+02	10%	68	5 99E+06	1 95E-05	3 26E-12	3 00E-05	5.26E-13	8 00E-03	3.30E-04	3 24E-10	1.20E+00	2 59E+06	4.31E-06
EU155	5 41E+02	10%	68	5 99E+06	1 95E-05	3 26E-12	3.00E-05	3.60E-13	8.00E-03	3 30E-04	2.40E-10	8 88E-01	2.59E+06	2.18E-06
AM241	2 78E+02	10%	68	5 99E+06	1 95E-05	3 26E-12	3 00E-05	1 85E-13	8 00E-03	3.30E-04	1.60E-09	5 92E+00	2.59E+06	7.48E-06
TE125M	1 93E+02	10%	68	5.99E+06	1.95E-05	3 26E-12	3.00E-05	1.29E-13	8 00E-03	3.30E-04	9 93E-11	3.67E-01	2 59E+06	3 23E-07
PU240	1 50E+02	10%	68	5 99E+06	1.95E-05	3 26E-12	3 00E-05	9 98E-14	8.00E-03	3 30E-04	9.05E-10	3 35E+00	2.59E+06	2 28E-06
SM151	9 76E+01	10%	68	5.99E+06	1 95E-05	3 26E-12	3 00E-05	6.49E-14	8.00E-03	3.30E-04	1.32E-14	4 88E-05	2.59E+06	2.17E-11
PU239	6.70E+01	10%	68	5 99E+06	1.95E-05	3 26E-12	3.00E-05	4.46E-14	8.00E-03	3 30E-04	9.03E-10	3 34E+00	2 59E+06	1.02E-06
BA137M	3 17E+04	10%	68	5.99E+06	1.95E-05	3 26E-12	3.00E-05	2.11E-11	8.00E-03	3.30E-04	0.00E+00	0 00E+00	2 59E+06	0 00E+00
RH106	4.71E+03	10%	68	5.99E+06	1.95E-05	3 26E-12	3.00E-05	3 13E-12	8.00E-03	3 30E-04	0.00E+00	0.00E+00	2.59E+06	0 00E+00
PR144M	3 48E+01	10%	68	5 99E+06	1.95E-05	3 26E-12	3.00E-05	2.31E-14	8 00E-03	3.30E-04	0 00E+00	0 00E+00	2 59E+06	0 00E+00
AM243	1.36E+01	10%	68	5.99E+06	1.95E-05	3 26E-12	3 00E-05	9 05E-15	8.00E-03	3 30E-04	8 29E-09	3 07E+01	2 59E+06	1.90E-06
CM242	9 82E+00	10%	68	5 99E+06	1.95E-05	3.26E-12	3 00E-05	6 53E-15	8 00E-03	3 30E-04	9.41E-10	3 48E+00	2.59E+06	1.55E-07
CM243	9 79E+00	10%	68	5 99E+06	1.95E-05	3.26E-12	3 00E-05	6.51E-15	8 00E-03	3 30E-04	3 83E-09	1 42E+01	2.59E+06	6 31E-07
NP239	1 36E+01	10%	68	5.99E+06	1.95E-05	3 26E-12	3.00E-05	9.05E-15	8 00E-03	3 30E-04	7 62E-12	2.82E-02	2.59E+06	1 74E-09
NP237	1.18E-01	10%	68	5.99E+06	1 95E-05	3.26E-12	3.00E-05	7.85E-17	8.00E-03	3 30E-04	1.34E-08	4 96E+01	2 59E+06	2 66E-08
PU242	9.04E-01	10%	68	5 99E+06	1 95E-05	3 26E-12	3.00E-05	6 01E-16	8 00E-03	3.30E-04	8 79E-10	3.25E+00	2.59E+06	1.34E-08
AM242	2 71E+00	10%	68	5 99E+06	1.95E-05	3.26E-12	3.00E-05	1 80E-15	8 00E-03	3 30E-04	2.52E-12	9 32E-03	2 59E+06	1.15E-10
AM242M	2 72E+00	10%	68	5 99E+06	1 95E-05	3 26E-12	3.00E-05	1 81E-15	8 00E-03	3 30E-04	5 64E-10	2.09E+00	2.59E+06	2 58E-08
													Total	6 52E+00

MPC-68														
Accident Conditions														
Committed Effective Dose Equivalent From Inhalation														
Nuclide	Inventory (Ci/Assy)	% remain airborne	No. Assy	MPC Vol (cm3)	L_{acc} Rate at Upstream (cm3/s)	Fraction Released per sec	Release Fraction	Release Rate (Ci/sec)	X/Q (sec/m3)	Breathing Rate (m3/sec)	DCF (Sv/Bq)	DCF (mRem/uCi)	Occ Time (sec)	CEDE (mRem)
								Gases						
H 3	1 24E+02	100%	68	5.99E+06	1.95E-05	3.26E-12	0.30	8.23E-09	8 00E-03	3.30E-04	1.73E-11	6.40E-02	2.59E+06	3.60E-03
I129	1.12E-02	100%	68	5 99E+06	1.95E-05	3.26E-12	0.30	7.45E-13	8 00E-03	3.30E-04	4.69E-08	1.74E+02	2.59E+06	8 84E-04
KR 85	2.04E+03	100%	68	5.99E+06	1.95E-05	3 26E-12	0 30	1.36E-07	8 00E-03	3 30E-04	0 00E+00	0 00E+00	2 59E+06	0 00E+00
								Crud						
Co-60	6 50E+01	100%	68	5.99E+06	1.95E-05	3 26E-12	1.00	1.44E-08	8 00E-03	3.30E-04	5.91E-08	2.19E+02	2.59E+06	2.15E+01
								Volatiles						
SR 90	2 24E+04	100%	68	5 99E+06	1.95E-05	3.26E-12	2 00E-04	9 93E-10	8 00E-03	3.30E-04	3.51E-07	1.30E+03	2.59E+06	8 82E+00
RU106	4.71E+03	100%	68	5 99E+06	1.95E-05	3.26E-12	2 00E-04	2 09E-10	8 00E-03	3.30E-04	1.29E-07	4.77E+02	2.59E+06	6 82E-01
CS134	1.18E+04	100%	68	5.99E+06	1.95E-05	3.26E-12	2.00E-04	5.23E-10	8 00E-03	3 30E-04	1.25E-08	4 63E+01	2.59E+06	1.65E-01
CS137	3 35E+04	100%	68	5 99E+06	1.95E-05	3.26E-12	2.00E-04	1.49E-09	8 00E-03	3.30E-04	8 63E-09	3.19E+01	2.59E+06	3 24E-01
								Fines						
PU241	2.58E+04	10%	68	5.99E+06	1.95E-05	3 26E-12	3 00E-05	1.72E-11	8 00E-03	3 30E-04	2 23E-06	8 25E+03	2 59E+06	9 68E-01
Y 90	2 24E+04	10%	68	5 99E+06	1.95E-05	3.26E-12	3 00E-05	1 49E-11	8 00E-03	3.30E-04	2.28E-09	8 44E+00	2.59E+06	8.59E-04
PM147	9 63E+03	10%	68	5 99E+06	1.95E-05	3 26E-12	3 00E-05	6.41E-12	8.00E-03	3.30E-04	1.06E-08	3 92E+01	2.59E+06	1.72E-03
CE144	2.48E+03	10%	68	5 99E+06	1.95E-05	3 26E-12	3 00E-05	1.65E-12	8.00E-03	3 30E-04	1 01E-07	3 74E+02	2 59E+06	4 21E-03
PR144	2.48E+03	10%	68	5.99E+06	1 95E-05	3 26E-12	3 00E-05	1 65E-12	8 00E-03	3 30E-04	1.17E-11	4.33E-02	2.59E+06	4 88E-07
EU154	1.74E+03	10%	68	5 99E+06	1.95E-05	3.26E-12	3 00E-05	1.16E-12	8.00E-03	3.30E-04	7.73E-08	2 86E+02	2 59E+06	2.26E-03
CM244	2 38E+03	10%	68	5 99E+06	1.95E-05	3.26E-12	3 00E-05	1 58E-12	8.00E-03	3.30E-04	6.70E-05	2.48E+05	2.59E+06	2 68E+00
PU238	1 58E+03	10%	68	5 99E+06	1.95E-05	3 26E-12	3 00E-05	1.05E-12	8 00E-03	3 30E-04	1.06E-04	3.92E+05	2.59E+06	2 82E+00
SB125	7.91E+02	10%	68	5 99E+06	1.95E-05	3.26E-12	3 00E-05	5 26E-13	8 00E-03	3.30E-04	3.30E-09	1.22E+01	2.59E+06	4.39E-05
EU155	5.41E+02	10%	68	5 99E+06	1.95E-05	3.26E-12	3 00E-05	3 60E-13	8 00E-03	3 30E-04	1.12E-08	4.14E+01	2 59E+06	1 02E-04
AM241	2.78E+02	10%	68	5.99E+06	1.95E-05	3.26E-12	3.00E-05	1.85E-13	8 00E-03	3 30E-04	1.20E-04	4.44E+05	2.59E+06	5 61E-01
TE125M	1 93E+02	10%	68	5 99E+06	1.95E-05	3.26E-12	3 00E-05	1.29E-13	8 00E-03	3.30E-04	1.97E-09	7.29E+00	2.59E+06	6.41E-06
PU240	1 50E+02	10%	68	5 99E+06	1.95E-05	3 26E-12	3 00E-05	9 98E-14	8 00E-03	3.30E-04	1.16E-04	4.29E+05	2.59E+06	2 93E-01
SM151	9 76E+01	10%	68	5 99E+06	1.95E-05	3 26E-12	3.00E-05	6 49E-14	8 00E-03	3.30E-04	8.10E-09	3 00E+01	2.59E+06	1.33E-05
PU239	6 70E+01	10%	68	5 99E+06	1.95E-05	3.26E-12	3.00E-05	4.46E-14	8.00E-03	3 30E-04	1.16E-04	4.29E+05	2.59E+06	1.31E-01
BA137M	3.17E+04	10%	68	5 99E+06	1.95E-05	3 26E-12	3 00E-05	2.11E-11	8.00E-03	3.30E-04	0 00E+00	0 00E+00	2 59E+06	0 00E+00
RH106	4 71E+03	10%	68	5 99E+06	1.95E-05	3.26E-12	3.00E-05	3 13E-12	8 00E-03	3.30E-04	0.00E+00	0.00E+00	2.59E+06	0 00E+00
PR144M	3 48E+01	10%	68	5 99E+06	1.95E-05	3.26E-12	3 00E-05	2 31E-14	8 00E-03	3.30E-04	0.00E+00	0 00E+00	2 59E+06	0 00E+00
AM243	1.36E+01	10%	68	5 99E+06	1.95E-05	3 26E-12	3 00E-05	9.05E-15	8.00E-03	3 30E-04	1.19E-04	4 40E+05	2.59E+06	2.72E-02
CM242	9 82E+00	10%	68	5 99E+06	1.95E-05	3.26E-12	3.00E-05	6 53E-15	8 00E-03	3.30E-04	4.67E-06	1.73E+04	2.59E+06	7.72E-04
CM243	9.79E+00	10%	68	5.99E+06	1.95E-05	3 26E-12	3 00E-05	6.51E-15	8.00E-03	3 30E-04	8.30E-05	3 07E+05	2 59E+06	1.37E-02
NP239	1 36E+01	10%	68	5 99E+06	1.95E-05	3.26E-12	3.00E-05	9 05E-15	8 00E-03	3.30E-04	6.78E-10	2 51E+00	2.59E+06	1.55E-07
NP237	1.18E-01	10%	68	5 99E+06	1 95E-05	3.26E-12	3 00E-05	7.85E-17	8 00E-03	3.30E-04	1.46E-04	5.40E+05	2.59E+06	2.90E-04
PU242	9 04E-01	10%	68	5 99E+06	1.95E-05	3 26E-12	3 00E-05	6.01E-16	8.00E-03	3.30E-04	1.11E-04	4.11E+05	2 59E+06	1.69E-03
AM242	2 71E+00	10%	68	5 99E+06	1.95E-05	3.26E-12	3 00E-05	1 80E-15	8 00E-03	3.30E-04	1.58E-08	5.85E+01	2.59E+06	7 21E-07
AM242M	2.72E+00	10%	68	5.99E+06	1.95E-05	3 26E-12	3 00E-05	1.81E-15	8 00E-03	3 30E-04	1.15E-04	4 26E+05	2 59E+06	5 26E-03
													Total	3 91E+01

MPC-68															
Normal Conditions															
Effective Dose Equivalent From Submersion															
Nuclide	Inventory (Ci/Assy)	% available for release	% remain airborne	No. Assy	MPC Vol (cm3)	L_{nor} Rate at Upstream (cm3/s)	Fraction Released per sec	Release Fraction	Release Rate (Ci/sec)	X/Q (sec/m3)	DCF (Sv/Bq)	DCF (mRem/uCi)	Occ Time (sec)	DDE (mRem)	
									Gases						
H 3	1 24E+02	2 5%	100%	68	5.99E+06	1.12E-05	1.87E-12	0.30	1.18E-10	1.60E-04	0.00E+00	0.00E+00	3.15E+07	0 00E+00	
I129	1.12E-02	2 5%	100%	68	5.99E+06	1.12E-05	1.87E-12	0 30	1.07E-14	1 60E-04	4 83E-16	1.79E-06	3.15E+07	9 62E-11	
KR 85	2 04E+03	2.5%	100%	68	5.99E+06	1.12E-05	1 87E-12	0 30	1 95E-09	1.60E-04	1.17E-16	4 33E-07	3.15E+07	4 24E-06	
									Crud						
Co-60	6.50E+01	100.0%	100%	68	5.99E+06	1.12E-05	1.87E-12	0.15	1.24E-09	1 60E-04	1.23E-13	4 55E-04	3.15E+07	2.84E-03	
									Volatiles						
SR 90	2.24E+04	2 5%	100%	68	5.99E+06	1.12E-05	1.87E-12	2 00E-04	1 42E-11	1 60E-04	7.78E-18	2.88E-08	3.15E+07	2 07E-09	
RU106	4 71E+03	2 5%	100%	68	5 99E+06	1.12E-05	1 87E-12	2.00E-04	2 99E-12	1.60E-04	0 00E+00	0.00E+00	3 15E+07	0 00E+00	
CS134	1.18E+04	2 5%	100%	68	5.99E+06	1.12E-05	1 87E-12	2 00E-04	7.50E-12	1 60E-04	7.40E-14	2.74E-04	3.15E+07	1.04E-05	
CS137	3 35E+04	2.5%	100%	68	5 99E+06	1.12E-05	1 87E-12	2.00E-04	2 13E-11	1.60E-04	7.96E-18	2.95E-08	3 15E+07	3.16E-09	
									Fines						
PU241	2 58E+04	2 5%	10%	68	5.99E+06	1.12E-05	1.87E-12	3 00E-05	2.46E-13	1 60E-04	7.19E-20	2 66E-10	3.15E+07	3 30E-13	
Y 90	2 24E+04	2.5%	10%	68	5 99E+06	1.12E-05	1 87E-12	3.00E-05	2.14E-13	1 60E-04	1 89E-16	6 99E-07	3.15E+07	7 53E-10	
PM147	9.63E+03	2 5%	10%	68	5 99E+06	1.12E-05	1 87E-12	3 00E-05	9.18E-14	1 60E-04	7.48E-19	2.77E-09	3.15E+07	1.28E-12	
CE144	2 48E+03	2 5%	10%	68	5.99E+06	1.12E-05	1.87E-12	3 00E-05	2.36E-14	1.60E-04	8.53E-16	3.16E-06	3.15E+07	3.76E-10	
PR144	2 48E+03	2.5%	10%	68	5 99E+06	1.12E-05	1 87E-12	3 00E-05	2.36E-14	1 60E-04	1.90E-15	7 03E-06	3 15E+07	8 38E-10	
EU154	1 74E+03	2 5%	10%	68	5.99E+06	1.12E-05	1 87E-12	3.00E-05	1 66E-14	1 60E-04	6 00E-14	2 22E-04	3.15E+07	1 86E-08	
CM244	2 38E+03	2 5%	10%	68	5 99E+06	1.12E-05	1.87E-12	3 00E-05	2 27E-14	1.60E-04	6 90E-18	2.55E-08	3 15E+07	2 92E-12	
PU238	1 58E+03	2.5%	10%	68	5 99E+06	1.12E-05	1 87E-12	3.00E-05	1 51E-14	1.60E-04	6 56E-18	2 43E-08	3.15E+07	1.84E-12	
SB125	7 91E+02	2.5%	10%	68	5.99E+06	1.12E-05	1 87E-12	3.00E-05	7 54E-15	1.60E-04	1.98E-14	7.33E-05	3.15E+07	2.79E-09	
EU155	5.41E+02	2 5%	10%	68	5 99E+06	1.12E-05	1.87E-12	3 00E-05	5.16E-15	1 60E-04	2.49E-15	9.21E-06	3.15E+07	2.40E-10	
AM241	2 78E+02	2.5%	10%	68	5 99E+06	1.12E-05	1 87E-12	3.00E-05	2 65E-15	1 60E-04	8.58E-16	3.17E-06	3.15E+07	4.24E-11	
TE125M	1 93E+02	2.5%	10%	68	5 99E+06	1.12E-05	1.87E-12	3 00E-05	1 84E-15	1.60E-04	5.96E-16	2.21E-06	3.15E+07	2.05E-11	
PU240	1.50E+02	2 5%	10%	68	5 99E+06	1.12E-05	1.87E-12	3 00E-05	1.43E-15	1.60E-04	6.36E-18	2.35E-08	3.15E+07	1.70E-13	
SM151	9.76E+01	2.5%	10%	68	5.99E+06	1.12E-05	1.87E-12	3.00E-05	9 31E-16	1 60E-04	5.20E-20	1.92E-10	3.15E+07	9.02E-16	
PU239	6 70E+01	2 5%	10%	68	5 99E+06	1.12E-05	1 87E-12	3.00E-05	6.39E-16	1.60E-04	4.84E-18	1.79E-08	3.15E+07	5 77E-14	
BA137M	3 17E+04	2 5%	10%	68	5 99E+06	1.12E-05	1 87E-12	3 00E-05	3 02E-13	1 60E-04	2 82E-14	1.04E-04	3 15E+07	1 59E-07	
RH106	4.71E+03	2 5%	10%	68	5 99E+06	1.12E-05	1.87E-12	3 00E-05	4.49E-14	1.60E-04	1 01E-14	3.74E-05	3 15E+07	8 46E-09	
PR144M	3 48E+01	2.5%	10%	68	5 99E+06	1.12E-05	1 87E-12	3 00E-05	3.32E-16	1 60E-04	3.25E-16	1.20E-06	3.15E+07	2.01E-12	
AM243	1.36E+01	2 5%	10%	68	5.99E+06	1.12E-05	1.87E-12	3 00E-05	1.30E-16	1 60E-04	2.19E-15	8.10E-06	3 15E+07	5.30E-12	
CM242	9.82E+00	2 5%	10%	68	5.99E+06	1.12E-05	1 87E-12	3 00E-05	9.36E-17	1 60E-04	7.83E-18	2 90E-08	3.15E+07	1.37E-14	
CM243	9.79E+00	2 5%	10%	68	5.99E+06	1 12E-05	1.87E-12	3 00E-05	9.34E-17	1 60E-04	5 77E-15	2.13E-05	3 15E+07	1.00E-11	
NP239	1 36E+01	2.5%	10%	68	5 99E+06	1.12E-05	1.87E-12	3 00E-05	1 30E-16	1 60E-04	7 53E-15	2.79E-05	3.15E+07	1 82E-11	
NP237	1 18E-01	2 5%	10%	68	5 99E+06	1.12E-05	1.87E-12	3 00E-05	1 13E-18	1.60E-04	1.04E-15	3 85E-06	3.15E+07	2.18E-14	
PU242	9 04E-01	2.5%	10%	68	5 99E+06	1.12E-05	1.87E-12	3 00E-05	8.62E-18	1 60E-04	5 34E-18	1.98E-08	3.15E+07	8 58E-16	
AM242	2.71E+00	2 5%	10%	68	5.99E+06	1.12E-05	1.87E-12	3 00E-05	2.58E-17	1.60E-04	6 09E-16	2.25E-06	3.15E+07	2.93E-13	
AM242M	2.72E+00	2 5%	10%	68	5 99E+06	1.12E-05	1 87E-12	3 00E-05	2 59E-17	1.60E-04	3 80E-17	1.41E-07	3.15E+07	1.84E-14	
													Total	2 86E-03	

MPC-68															
Normal Conditions															
Effective Dose Equivalent From Submersion															
Nuclide	Inventory (Ci/Assy)	% available for release	% remain airborne	No. Assy	MPC Vol (cm3)	L_{nor} Rate at Upstream (cm3/s)	Fraction Released per sec	Release Fraction	Release Rate (Ci/sec)	X/Q (sec/m3)	DCF (Sv/Bq)	DCF (mRem/uCi)	Occ Time (sec)	DDE (mRem)	
									Gases						
H 3	1.24E+02	2 5%	100%	68	5 99E+06	1.12E-05	1.87E-12	0.30	1.18E-10	1 60E-04	0 00E+00	0 00E+00	3.15E+07	0.00E+00	
I129	1.12E-02	2.5%	100%	68	5 99E+06	1.12E-05	1.87E-12	0 30	1 07E-14	1 60E-04	6 66E-16	2.46E-06	3.15E+07	1.33E-10	
KR 85	2 04E+03	2 5%	100%	68	5 99E+06	1.12E-05	1.87E-12	0 30	1.95E-09	1.60E-04	1.34E-16	4.96E-07	3.15E+07	4.86E-06	
									Crud						
Co-60	6 50E+01	100 0%	100%	68	5 99E+06	1.12E-05	1.87E-12	0.15	1 24E-09	1 60E-04	1.39E-13	5 14E-04	3 15E+07	3.21E-03	
									Volatiles						
SR 90	2.24E+04	2 5%	100%	68	5.99E+06	1.12E-05	1.87E-12	2 00E-04	1 42E-11	1 60E-04	9 49E-18	3 51E-08	3.15E+07	2.52E-09	
RU106	4.71E+03	2.5%	100%	68	5 99E+06	1.12E-05	1.87E-12	2.00E-04	2 99E-12	1 60E-04	0 00E+00	0 00E+00	3.15E+07	0 00E+00	
CS134	1.18E+04	2 5%	100%	68	5.99E+06	1.12E-05	1.87E-12	2.00E-04	7.50E-12	1.60E-04	8.43E-14	3.12E-04	3.15E+07	1.18E-05	
CS137	3 35E+04	2 5%	100%	68	5 99E+06	1.12E-05	1.87E-12	2 00E-04	2.13E-11	1.60E-04	9.67E-18	3.58E-08	3.15E+07	3.84E-09	
									Fines						
PU241	2 58E+04	2.5%	10%	68	5.99E+06	1.12E-05	1 87E-12	3 00E-05	2.46E-13	1.60E-04	8 67E-20	3.21E-10	3.15E+07	3.98E-13	
Y 90	2.24E+04	2.5%	10%	68	5 99E+06	1.12E-05	1.87E-12	3.00E-05	2.14E-13	1 60E-04	2 20E-16	8 14E-07	3 15E+07	8 76E-10	
PM147	9 63E+03	2.5%	10%	68	5 99E+06	1.12E-05	1.87E-12	3 00E-05	9.18E-14	1.60E-04	9 56E-19	3 54E-09	3.15E+07	1.64E-12	
CE144	2 48E+03	2 5%	10%	68	5 99E+06	1.12E-05	1.87E-12	3.00E-05	2.36E-14	1.60E-04	1 01E-15	3.74E-06	3.15E+07	4.45E-10	
PR144	2.48E+03	2.5%	10%	68	5.99E+06	1.12E-05	1 87E-12	3 00E-05	2.36E-14	1.60E-04	2.15E-15	7.96E-06	3.15E+07	9.48E-10	
EU154	1.74E+03	2 5%	10%	68	5 99E+06	1.12E-05	1.87E-12	3.00E-05	1.66E-14	1 60E-04	6 81E-14	2 52E-04	3 15E+07	2.11E-08	
CM244	2 38E+03	2.5%	10%	68	5 99E+06	1.12E-05	1.87E-12	3 00E-05	2.27E-14	1.60E-04	1.33E-17	4.92E-08	3.15E+07	5.63E-12	
PU238	1 58E+03	2 5%	10%	68	5 99E+06	1.12E-05	1.87E-12	3 00E-05	1 51E-14	1.60E-04	1.27E-17	4.70E-08	3.15E+07	3 57E-12	
SB125	7 91E+02	2.5%	10%	68	5.99E+06	1.12E-05	1 87E-12	3 00E-05	7.54E-15	1 60E-04	2.27E-14	8.40E-05	3.15E+07	3.19E-09	
EU155	5.41E+02	2 5%	10%	68	5 99E+06	1.12E-05	1.87E-12	3 00E-05	5 16E-15	1.60E-04	2.95E-15	1.09E-05	3.15E+07	2.84E-10	
AM241	2.78E+02	2.5%	10%	68	5.99E+06	1.12E-05	1.87E-12	3 00E-05	2.65E-15	1.60E-04	1.07E-15	3.96E-06	3.15E+07	5.29E-11	
TE125M	1.93E+02	2 5%	10%	68	5 99E+06	1.12E-05	1.87E-12	3 00E-05	1.84E-15	1.60E-04	8.48E-16	3.14E-06	3.15E+07	2.92E-11	
PU240	1 50E+02	2 5%	10%	68	5 99E+06	1.12E-05	1.87E-12	3.00E-05	1.43E-15	1.60E-04	1.23E-17	4.55E-08	3.15E+07	3.28E-13	
SM151	9.76E+01	2.5%	10%	68	5 99E+06	1.12E-05	1.87E-12	3 00E-05	9.31E-16	1.60E-04	8 80E-20	3.26E-10	3.15E+07	1.53E-15	
PU239	6.70E+01	2 5%	10%	68	5.99E+06	1.12E-05	1.87E-12	3 00E-05	6.39E-16	1.60E-04	7.55E-18	2 79E-08	3 15E+07	9 00E-14	
BA137M	3.17E+04	2 5%	10%	68	5 99E+06	1.12E-05	1.87E-12	3.00E-05	3 02E-13	1.60E-04	3.22E-14	1.19E-04	3.15E+07	1.82E-07	
RH106	4.71E+03	2 5%	10%	68	5 99E+06	1.12E-05	1.87E-12	3 00E-05	4.49E-14	1.60E-04	1.16E-14	4 29E-05	3.15E+07	9.72E-09	
PR144M	3 48E+01	2 5%	10%	68	5 99E+06	1.12E-05	1.87E-12	3 00E-05	3.32E-16	1 60E-04	4.20E-16	1.55E-06	3.15E+07	2.60E-12	
AM243	1 36E+01	2 5%	10%	68	5 99E+06	1.12E-05	1 87E-12	3 00E-05	1.30E-16	1.60E-04	2.61E-15	9 66E-06	3.15E+07	6.31E-12	
CM242	9.82E+00	2 5%	10%	68	5 99E+06	1.12E-05	1.87E-12	3 00E-05	9 36E-17	1.60E-04	1.48E-17	5.48E-08	3.15E+07	2.58E-14	
CM243	9 79E+00	2.5%	10%	68	5 99E+06	1.12E-05	1.87E-12	3 00E-05	9 34E-17	1.60E-04	6.68E-15	2.47E-05	3.15E+07	1.16E-11	
NP239	1.36E+01	2 5%	10%	68	5 99E+06	1.12E-05	1.87E-12	3 00E-05	1.30E-16	1.60E-04	8.73E-15	3 23E-05	3.15E+07	2.11E-11	
NP237	1.18E-01	2.5%	10%	68	5 99E+06	1.12E-05	1.87E-12	3.00E-05	1.13E-18	1 60E-04	1.26E-15	4 66E-06	3.15E+07	2.64E-14	
PU242	9 04E-01	2 5%	10%	68	5 99E+06	1.12E-05	1.87E-12	3 00E-05	8 62E-18	1.60E-04	1.03E-17	3 81E-08	3.15E+07	1.66E-15	
AM242	2 71E+00	2 5%	10%	68	5.99E+06	1.12E-05	1 87E-12	3 00E-05	2.58E-17	1.60E-04	7.30E-16	2.70E-06	3.15E+07	3.52E-13	
AM242M	2.72E+00	2 5%	10%	68	5 99E+06	1.12E-05	1.87E-12	3 00E-05	2.59E-17	1.60E-04	6.01E-17	2.22E-07	3.15E+07	2.91E-14	
													Total	3.23E-03	

MPC-68															
Normal Conditions															
Effective Dose Equivalent From Submersion															
Nuclide	Inventory (Ci/Assy)	% available for release	% remain airborne	No. Assy	MPC Vol (cm3)	L_{nor} Rate at Upstream (cm3/s)	Fraction Released per sec	Release Fraction	Release Rate (Ci/sec)	X/Q (sec/m3)	DCF (Sv/Bq)	DCF (mRem/uCi)	Occ Time (sec)	DDE (mRem)	
									Gases						
H 3	1.24E+02	2.5%	100%	68	5.99E+06	1.12E-05	1.87E-12	0.30	1.18E-10	1 60E-04	2.75E-18	1 02E-08	3.15E+07	6 05E-09	
I129	1.12E-02	2.5%	100%	68	5 99E+06	1.12E-05	1.87E-12	0.30	1.07E-14	1 60E-04	2.14E-16	7.92E-07	3.15E+07	4.26E-11	
KR 85	2 04E+03	2.5%	100%	68	5 99E+06	1.12E-05	1.87E-12	0 30	1.95E-09	1 60E-04	1.14E-16	4 22E-07	3.15E+07	4.14E-06	
									Crud						
Co-60	6 50E+01	100 0%	100%	68	5 99E+06	1.12E-05	1 87E-12	0.15	1.24E-09	1.60E-04	1.24E-13	4 59E-04	3.15E+07	2 87E-03	
									Volatiles						
SR 90	2 24E+04	2.5%	100%	68	5 99E+06	1.12E-05	1.87E-12	2 00E-04	1.42E-11	1 60E-04	6.44E-18	2.38E-08	3 15E+07	1.71E-09	
RU106	4.71E+03	2 5%	100%	68	5 99E+06	1.12E-05	1.87E-12	2.00E-04	2.99E-12	1.60E-04	0.00E+00	0 00E+00	3.15E+07	0 00E+00	
CS134	1.18E+04	2 5%	100%	68	5.99E+06	1.12E-05	1.87E-12	2.00E-04	7.50E-12	1.60E-04	7.37E-14	2.73E-04	3 15E+07	1.03E-05	
CS137	3.35E+04	2 5%	100%	68	5.99E+06	1.12E-05	1 87E-12	2 00E-04	2.13E-11	1 60E-04	6.68E-18	2 47E-08	3.15E+07	2 65E-09	
									Fines						
PU241	2 58E+04	2 5%	10%	68	5 99E+06	1.12E-05	1 87E-12	3.00E-05	2.46E-13	1.60E-04	6.48E-20	2 40E-10	3.15E+07	2 97E-13	
Y 90	2 24E+04	2 5%	10%	68	5 99E+06	1.12E-05	1.87E-12	3 00E-05	2.14E-13	1.60E-04	1.77E-16	6.55E-07	3 15E+07	7 05E-10	
PM147	9 63E+03	2 5%	10%	68	5 99E+06	1.12E-05	1 87E-12	3 00E-05	9.18E-14	1 60E-04	5 45E-19	2 02E-09	3 15E+07	9.33E-13	
CE144	2.48E+03	2.5%	10%	68	5.99E+06	1.12E-05	1.87E-12	3 00E-05	2.36E-14	1.60E-04	7.69E-16	2 85E-06	3.15E+07	3 39E-10	
PR144	2 48E+03	2.5%	10%	68	5.99E+06	1.12E-05	1 87E-12	3 00E-05	2 36E-14	1.60E-04	1.90E-15	7 03E-06	3.15E+07	8 38E-10	
EU154	1.74E+03	2 5%	10%	68	5 99E+06	1 12E-05	1.87E-12	3 00E-05	1.66E-14	1.60E-04	5 99E-14	2 22E-04	3 15E+07	1.85E-08	
CM244	2.38E+03	2 5%	10%	68	5 99E+06	1.12E-05	1.87E-12	3 00E-05	2 27E-14	1 60E-04	7 08E-19	2.62E-09	3.15E+07	3 00E-13	
PU238	1.58E+03	2 5%	10%	68	5.99E+06	1.12E-05	1 87E-12	3.00E-05	1.51E-14	1 60E-04	1.06E-18	3.92E-09	3.15E+07	2.98E-13	
SB125	7.91E+02	2 5%	10%	68	5.99E+06	1.12E-05	1.87E-12	3.00E-05	7.54E-15	1 60E-04	1.95E-14	7 22E-05	3.15E+07	2.74E-09	
EU155	5 41E+02	2.5%	10%	68	5 99E+06	1.12E-05	1.87E-12	3 00E-05	5 16E-15	1.60E-04	2.22E-15	8 21E-06	3.15E+07	2 14E-10	
AM241	2.78E+02	2.5%	10%	68	5.99E+06	1.12E-05	1.87E-12	3 00E-05	2 65E-15	1 60E-04	6.74E-16	2.49E-06	3.15E+07	3.33E-11	
TE125M	1.93E+02	2 5%	10%	68	5.99E+06	1.12E-05	1 87E-12	3 00E-05	1 84E-15	1.60E-04	2.23E-16	8.25E-07	3 15E+07	7.67E-12	
PU240	1 50E+02	2.5%	10%	68	5 99E+06	1.12E-05	1 87E-12	3 00E-05	1 43E-15	1.60E-04	1.09E-18	4.03E-09	3.15E+07	2 91E-14	
SM151	9.76E+01	2 5%	10%	68	5 99E+06	1 12E-05	1 87E-12	3 00E-05	9 31E-16	1 60E-04	7.08E-21	2 62E-11	3.15E+07	1.23E-16	
PU239	6.70E+01	2.5%	10%	68	5 99E+06	1.12E-05	1 87E-12	3 00E-05	6 39E-16	1 60E-04	2.65E-18	9.81E-09	3 15E+07	3 16E-14	
BA137M	3 17E+04	2.5%	10%	68	5 99E+06	1.12E-05	1.87E-12	3 00E-05	3 02E-13	1 60E-04	2 80E-14	1 04E-04	3.15E+07	1 58E-07	
RH106	4.71E+03	2.5%	10%	68	5.99E+06	1.12E-05	1 87E-12	3.00E-05	4.49E-14	1 60E-04	1 01E-14	3.74E-05	3 15E+07	8 46E-09	
PR144M	3 48E+01	2.5%	10%	68	5 99E+06	1.12E-05	1.87E-12	3 00E-05	3 32E-16	1 60E-04	2.00E-16	7 40E-07	3 15E+07	1.24E-12	
AM243	1 36E+01	2.5%	10%	68	5 99E+06	1.12E-05	1.87E-12	3 00E-05	1 30E-16	1 60E-04	1.92E-15	7 10E-06	3.15E+07	4 64E-12	
CM242	9 82E+00	2 5%	10%	68	5 99E+06	1 12E-05	1.87E-12	3.00E-05	9.36E-17	1 60E-04	1.13E-18	4.18E-09	3 15E+07	1.97E-15	
CM243	9 79E+00	2.5%	10%	68	5 99E+06	1.12E-05	1.87E-12	3 00E-05	9 34E-17	1.60E-04	5 50E-15	2.04E-05	3 15E+07	9.58E-12	
NP239	1.36E+01	2 5%	10%	68	5.99E+06	1.12E-05	1.87E-12	3.00E-05	1.30E-16	1 60E-04	7.18E-15	2.66E-05	3 15E+07	1.74E-11	
NP237	1.18E-01	2 5%	10%	68	5.99E+06	1.12E-05	1 87E-12	3 00E-05	1.13E-18	1 60E-04	9.02E-16	3.34E-06	3 15E+07	1.89E-14	
PU242	9 04E-01	2.5%	10%	68	5.99E+06	1.12E-05	1 87E-12	3 00E-05	8 62E-18	1 60E-04	9 69E-19	3 59E-09	3.15E+07	1.56E-16	
AM242	2.71E+00	2 5%	10%	68	5 99E+06	1.12E-05	1.87E-12	3.00E-05	2 58E-17	1.60E-04	5.51E-16	2.04E-06	3.15E+07	2.66E-13	
AM242M	2.72E+00	2 5%	10%	68	5 99E+06	1.12E-05	1 87E-12	3 00E-05	2 59E-17	1.60E-04	1.72E-17	6.36E-08	3.15E+07	8 32E-15	
													Total	2 88E-03	

MPC-68															
Normal Conditions															
Effective Dose Equivalent From Submersion															
Nuclide	Inventory (Ci/Assy)	% available for release	% remain airborne	No. Assy	MPC Vol (cm3)	L_{nor} Rate at Upstream (cm3/s)	Fraction Released per sec	Release Fraction	Release Rate (Ci/sec)	X/Q (sec/m3)	DCF (Sv/Bq)	DCF (mRem/uCi)	Occ Time (sec)	DDE (mRem)	
									Gases						
H 3	1.24E+02	2.5%	100%	68	5.99E+06	1.12E-05	1.87E-12	0.30	1.18E-10	1.60E-04	0 00E+00	0 00E+00	3.15E+07	0 00E+00	
I129	1.12E-02	2 5%	100%	68	5 99E+06	1.12E-05	1.87E-12	0 30	1.07E-14	1.60E-04	1.64E-16	6.07E-07	3.15E+07	3.27E-11	
KR 85	2.04E+03	2.5%	100%	68	5 99E+06	1.12E-05	1 87E-12	0.30	1.95E-09	1 60E-04	1 09E-16	4 03E-07	3.15E+07	3.95E-06	
									Crud						
Co-60	6.50E+01	100.0%	100%	68	5 99E+06	1.12E-05	1 87E-12	0.15	1 24E-09	1 60E-04	1 23E-13	4 55E-04	3.15E+07	2 84E-03	
									Volatiles						
SR 90	2.24E+04	2 5%	100%	68	5 99E+06	1.12E-05	1 87E-12	2 00E-04	1 42E-11	1.60E-04	5.44E-18	2 01E-08	3.15E+07	1 44E-09	
RU106	4.71E+03	2.5%	100%	68	5 99E+06	1.12E-05	1.87E-12	2.00E-04	2.99E-12	1 60E-04	0.00E+00	0 00E+00	3.15E+07	0 00E+00	
CS134	1.18E+04	2 5%	100%	68	5.99E+06	1.12E-05	1.87E-12	2 00E-04	7.50E-12	1 60E-04	7.19E-14	2 66E-04	3.15E+07	1.01E-05	
CS137	3 35E+04	2.5%	100%	68	5 99E+06	1.12E-05	1 87E-12	2.00E-04	2.13E-11	1.60E-04	5.70E-18	2.11E-08	3 15E+07	2.26E-09	
									Fines						
PU241	2 58E+04	2.5%	10%	68	5 99E+06	1.12E-05	1.87E-12	3 00E-05	2.46E-13	1.60E-04	5 63E-20	2.08E-10	3.15E+07	2.58E-13	
Y 90	2 24E+04	2 5%	10%	68	5 99E+06	1.12E-05	1 87E-12	3 00E-05	2.14E-13	1 60E-04	1 62E-16	5 99E-07	3.15E+07	6.45E-10	
PM147	9.63E+03	2 5%	10%	68	5 99E+06	1.12E-05	1.87E-12	3 00E-05	9.18E-14	1 60E-04	4.46E-19	1.65E-09	3.15E+07	7.64E-13	
CE144	2 48E+03	2 5%	10%	68	5.99E+06	1.12E-05	1.87E-12	3 00E-05	2 36E-14	1.60E-04	6.68E-16	2.47E-06	3.15E+07	2.95E-10	
PR144	2 48E+03	2 5%	10%	68	5.99E+06	1.12E-05	1 87E-12	3 00E-05	2.36E-14	1.60E-04	1.87E-15	6 92E-06	3.15E+07	8 25E-10	
EU154	1.74E+03	2.5%	10%	68	5.99E+06	1.12E-05	1.87E-12	3 00E-05	1 66E-14	1 60E-04	5 87E-14	2 17E-04	3.15E+07	1 82E-08	
CM244	2.38E+03	2.5%	10%	68	5.99E+06	1.12E-05	1.87E-12	3 00E-05	2.27E-14	1 60E-04	1 46E-18	5 40E-09	3.15E+07	6.18E-13	
PU238	1.58E+03	2 5%	10%	68	5.99E+06	1.12E-05	1.87E-12	3 00E-05	1.51E-14	1.60E-04	1.68E-18	6 22E-09	3.15E+07	4.72E-13	
SB125	7 91E+02	2 5%	10%	68	5 99E+06	1.12E-05	1.87E-12	3.00E-05	7.54E-15	1.60E-04	1.87E-14	6.92E-05	3.15E+07	2.63E-09	
EU155	5 41E+02	2.5%	10%	68	5 99E+06	1.12E-05	1 87E-12	3 00E-05	5.16E-15	1.60E-04	1.85E-15	6.85E-06	3.15E+07	1.78E-10	
AM241	2.78E+02	2 5%	10%	68	5 99E+06	1.12E-05	1.87E-12	3.00E-05	2.65E-15	1.60E-04	5 21E-16	1.93E-06	3.15E+07	2.58E-11	
TE125M	1.93E+02	2.5%	10%	68	5.99E+06	1.12E-05	1.87E-12	3.00E-05	1 84E-15	1.60E-04	1.86E-16	6 88E-07	3.15E+07	6.40E-12	
PU240	1.50E+02	2.5%	10%	68	5 99E+06	1.12E-05	1.87E-12	3 00E-05	1.43E-15	1 60E-04	1 65E-18	6.11E-09	3.15E+07	4.40E-14	
SM151	9.76E+01	2.5%	10%	68	5.99E+06	1.12E-05	1.87E-12	3.00E-05	9.31E-16	1.60E-04	1.13E-20	4.18E-11	3.15E+07	1.96E-16	
PU239	6 70E+01	2.5%	10%	68	5.99E+06	1.12E-05	1 87E-12	3 00E-05	6 39E-16	1 60E-04	2.67E-18	9 88E-09	3.15E+07	3.18E-14	
BA137M	3.17E+04	2.5%	10%	68	5 99E+06	1.12E-05	1.87E-12	3 00E-05	3 02E-13	1 60E-04	2.73E-14	1 01E-04	3.15E+07	1.54E-07	
RH106	4.71E+03	2.5%	10%	68	5.99E+06	1.12E-05	1.87E-12	3 00E-05	4 49E-14	1 60E-04	9.75E-15	3 61E-05	3 15E+07	8.17E-09	
PR144M	3 48E+01	2 5%	10%	68	5 99E+06	1.12E-05	1.87E-12	3 00E-05	3.32E-16	1.60E-04	1 56E-16	5 77E-07	3.15E+07	9 65E-13	
AM243	1.36E+01	2.5%	10%	68	5 99E+06	1.12E-05	1.87E-12	3 00E-05	1.30E-16	1 60E-04	1.55E-15	5.74E-06	3.15E+07	3.75E-12	
CM242	9 82E+00	2 5%	10%	68	5 99E+06	1.12E-05	1.87E-12	3.00E-05	9 36E-17	1.60E-04	1 89E-18	6 99E-09	3.15E+07	3.30E-15	
CM243	9.79E+00	2.5%	10%	68	5 99E+06	1.12E-05	1.87E-12	3.00E-05	9.34E-17	1.60E-04	5 00E-15	1 85E-05	3.15E+07	8.70E-12	
NP239	1.36E+01	2.5%	10%	68	5 99E+06	1.12E-05	1.87E-12	3 00E-05	1.30E-16	1.60E-04	6.50E-15	2 41E-05	3.15E+07	1 57E-11	
NP237	1.18E-01	2.5%	10%	68	5 99E+06	1.12E-05	1.87E-12	3 00E-05	1.13E-18	1 60E-04	7.69E-16	2 85E-06	3.15E+07	1 61E-14	
PU242	9.04E-01	2.5%	10%	68	5.99E+06	1.12E-05	1 87E-12	3 00E-05	8 62E-18	1.60E-04	1.43E-18	5.29E-09	3.15E+07	2.30E-16	
AM242	2 71E+00	2.5%	10%	68	5 99E+06	1.12E-05	1 87E-12	3 00E-05	2.58E-17	1.60E-04	4.77E-16	1 76E-06	3.15E+07	2 30E-13	
AM242M	2.72E+00	2.5%	10%	68	5 99E+06	1.12E-05	1.87E-12	3 00E-05	2 59E-17	1 60E-04	1.72E-17	6.36E-08	3.15E+07	8.32E-15	
													Total	2 86E-03	

MPC-68															
Normal Conditions															
Effective Dose Equivalent From Submersion															
Nuclide	Inventory (Ci/Assy)	% available for release	% remain airborne	No Assy	MPC Vol (cm3)	L_{nor} Rate at Upstream (cm3/s)	Fraction Released per sec	Release Fraction	Release Rate (Ci/sec)	X/Q (sec/m3)	DCF (Sv/Bq)	DCF (mRem/uCi)	Occ Time (sec)	DDE (mRem)	
									Gases						
H 3	1.24E+02	2.5%	100%	68	5.99E+06	1.12E-05	1.87E-12	0 30	1 18E-10	1 60E-04	0.00E+00	0 00E+00	3 15E+07	0 00E+00	
I129	1 12E-02	2 5%	100%	68	5.99E+06	1.12E-05	1 87E-12	0 30	1 07E-14	1.60E-04	1 10E-15	4.07E-06	3 15E+07	2.19E-10	
KR 85	2 04E+03	2 5%	100%	68	5 99E+06	1.12E-05	1 87E-12	0 30	1.95E-09	1 60E-04	2.20E-16	8.14E-07	3.15E+07	7.98E-06	
									Crud						
Co-60	6 50E+01	100 0%	100%	68	5.99E+06	1.12E-05	1 87E-12	0 15	1.24E-09	1 60E-04	1.78E-13	6 59E-04	3.15E+07	4.11E-03	
									Volatiles						
SR 90	2 24E+04	2.5%	100%	68	5.99E+06	1.12E-05	1 87E-12	2.00E-04	1 42E-11	1.60E-04	2 28E-17	8.44E-08	3.15E+07	6 05E-09	
RU106	4.71E+03	2 5%	100%	68	5 99E+06	1.12E-05	1 87E-12	2.00E-04	2.99E-12	1.60E-04	0 00E+00	0 00E+00	3.15E+07	0 00E+00	
CS134	1.18E+04	2 5%	100%	68	5 99E+06	1.12E-05	1.87E-12	2 00E-04	7.50E-12	1.60E-04	1.20E-13	4.44E-04	3.15E+07	1.68E-05	
CS137	3 35E+04	2 5%	100%	68	5.99E+06	1.12E-05	1.87E-12	2.00E-04	2.13E-11	1.60E-04	2 29E-17	8 47E-08	3.15E+07	9 09E-09	
									Fines						
PU241	2 58E+04	2 5%	10%	68	5.99E+06	1.12E-05	1 87E-12	3.00E-05	2 46E-13	1 60E-04	2.19E-19	8.10E-10	3.15E+07	1 00E-12	
Y 90	2 24E+04	2 5%	10%	68	5 99E+06	1.12E-05	1.87E-12	3.00E-05	2 14E-13	1 60E-04	4.44E-16	1 64E-06	3.15E+07	1 77E-09	
PM147	9 63E+03	2 5%	10%	68	5.99E+06	1 12E-05	1.87E-12	3 00E-05	9.18E-14	1 60E-04	2 18E-18	8.07E-09	3 15E+07	3.73E-12	
CE144	2 48E+03	2 5%	10%	68	5 99E+06	1.12E-05	1.87E-12	3.00E-05	2.36E-14	1 60E-04	2.49E-15	9 21E-06	3.15E+07	1.10E-09	
PR144	2 48E+03	2 5%	10%	68	5 99E+06	1.12E-05	1.87E-12	3 00E-05	2 36E-14	1.60E-04	2 99E-15	1.11E-05	3.15E+07	1.32E-09	
EU154	1 74E+03	2.5%	10%	68	5.99E+06	1.12E-05	1.87E-12	3.00E-05	1.66E-14	1 60E-04	9.43E-14	3 49E-04	3 15E+07	2 92E-08	
CM244	2 38E+03	2 5%	10%	68	5 99E+06	1.12E-05	1 87E-12	3 00E-05	2.27E-14	1.60E-04	8.82E-18	3.26E-08	3 15E+07	3.73E-12	
PU238	1.58E+03	2 5%	10%	68	5 99E+06	1.12E-05	1.87E-12	3 00E-05	1.51E-14	1.60E-04	9 30E-18	3.44E-08	3.15E+07	2.61E-12	
SB125	7 91E+02	2 5%	10%	68	5 99E+06	1.12E-05	1 87E-12	3.00E-05	7.54E-15	1.60E-04	3.53E-14	1.31E-04	3 15E+07	4 97E-09	
EU155	5 41E+02	2 5%	10%	68	5 99E+06	1.12E-05	1.87E-12	3 00E-05	5.16E-15	1.60E-04	8 09E-15	2.99E-05	3.15E+07	7 78E-10	
AM241	2 78E+02	2 5%	10%	68	5 99E+06	1.12E-05	1 87E-12	3 00E-05	2 65E-15	1 60E-04	2 87E-15	1.06E-05	3.15E+07	1.42E-10	
TE125M	1 93E+02	2.5%	10%	68	5.99E+06	1.12E-05	1 87E-12	3 00E-05	1.84E-15	1.60E-04	1.22E-15	4.51E-06	3 15E+07	4 20E-11	
PU240	1 50E+02	2 5%	10%	68	5 99E+06	1.12E-05	1 87E-12	3 00E-05	1.43E-15	1 60E-04	9 26E-18	3.43E-08	3 15E+07	2 47E-13	
SM151	9 76E+01	2 5%	10%	68	5.99E+06	1.12E-05	1.87E-12	3 00E-05	9 31E-16	1.60E-04	7.09E-20	2 62E-10	3.15E+07	1 23E-15	
PU239	6.70E+01	2 5%	10%	68	5 99E+06	1.12E-05	1 87E-12	3 00E-05	6.39E-16	1 60E-04	9 47E-18	3 50E-08	3.15E+07	1.13E-13	
BA137M	3 17E+04	2 5%	10%	68	5 99E+06	1.12E-05	1.87E-12	3.00E-05	3 02E-13	1.60E-04	4.63E-14	1.71E-04	3.15E+07	2 61E-07	
RH106	4.71E+03	2 5%	10%	68	5 99E+06	1.12E-05	1.87E-12	3 00E-05	4.49E-14	1.60E-04	1 72E-14	6.36E-05	3.15E+07	1.44E-08	
PR144M	3 48E+01	2 5%	10%	68	5.99E+06	1 12E-05	1 87E-12	3 00E-05	3.32E-16	1 60E-04	8 16E-16	3.02E-06	3 15E+07	5 05E-12	
AM243	1 36E+01	2 5%	10%	68	5.99E+06	1.12E-05	1.87E-12	3 00E-05	1.30E-16	1 60E-04	7.47E-15	2.76E-05	3 15E+07	1 81E-11	
CM242	9 82E+00	2 5%	10%	68	5.99E+06	1.12E-05	1.87E-12	3 00E-05	9 36E-17	1.60E-04	1 06E-17	3 92E-08	3 15E+07	1 85E-14	
CM243	9 79E+00	2 5%	10%	68	5 99E+06	1.12E-05	1 87E-12	3.00E-05	9.34E-17	1 60E-04	1.50E-14	5 55E-05	3 15E+07	2.61E-11	
NP239	1 36E+01	2 5%	10%	68	5 99E+06	1.12E-05	1.87E-12	3 00E-05	1.30E-16	1.60E-04	2.00E-14	7.40E-05	3.15E+07	4.84E-11	
NP237	1.18E-01	2 5%	10%	68	5 99E+06	1.12E-05	1 87E-12	3.00E-05	1.13E-18	1.60E-04	3 20E-15	1.18E-05	3.15E+07	6 71E-14	
PU242	9.04E-01	2 5%	10%	68	5 99E+06	1.12E-05	1.87E-12	3 00E-05	8 62E-18	1.60E-04	7 90E-18	2.92E-08	3.15E+07	1.27E-15	
AM242	2 71E+00	2 5%	10%	68	5 99E+06	1.12E-05	1.87E-12	3 00E-05	2 58E-17	1 60E-04	1 88E-15	6 96E-06	3.15E+07	9 06E-13	
AM242M	2.72E+00	2 5%	10%	68	5.99E+06	1.12E-05	1 87E-12	3 00E-05	2 59E-17	1.60E-04	7.94E-17	2.94E-07	3.15E+07	3.84E-14	
													Total	4.14E-03	

MPC-68															
Normal Conditions															
Effective Dose Equivalent From Submersion															
Nuclide	Inventory (Ci/Assy)	% available for release	% remain airborne	No. Assy	MPC Vol (cm3)	L_{nor} Rate at Upstream (cm3/s)	Fraction Released per sec	Release Fraction	Release Rate (Ci/sec)	X/Q (sec/m3)	DCF (Sv/Bq)	DCF (mRem/uCi)	Occ Time (sec)	DDE (mRem)	
									Gases						
H 3	1.24E+02	2.5%	100%	68	5.99E+06	1.12E-05	1.87E-12	0 30	1.18E-10	1.60E-04	0.00E+00	0 00E+00	3 15E+07	0 00E+00	
I129	1.12E-02	2 5%	100%	68	5 99E+06	1.12E-05	1.87E-12	0.30	1 07E-14	1 60E-04	3 86E-16	1.43E-06	3.15E+07	7.69E-11	
KR 85	2 04E+03	2.5%	100%	68	5 99E+06	1.12E-05	1.87E-12	0.30	1 95E-09	1.60E-04	1.18E-16	4 37E-07	3.15E+07	4.28E-06	
									Crud						
Co-60	6 50E+01	100 0%	100%	68	5.99E+06	1.12E-05	1.87E-12	0 15	1.24E-09	1 60E-04	1.27E-13	4.70E-04	3 15E+07	2.94E-03	
									Volatiles						
SR 90	2 24E+04	2 5%	100%	68	5 99E+06	1.12E-05	1.87E-12	2 00E-04	1.42E-11	1 60E-04	7.33E-18	2.71E-08	3 15E+07	1.95E-09	
RU106	4 71E+03	2 5%	100%	68	5 99E+06	1.12E-05	1.87E-12	2.00E-04	2.99E-12	1.60E-04	0 00E+00	0 00E+00	3.15E+07	0 00E+00	
CS134	1.18E+04	2 5%	100%	68	5 99E+06	1.12E-05	1.87E-12	2 00E-04	7 50E-12	1 60E-04	7.57E-14	2.80E-04	3.15E+07	1.06E-05	
CS137	3 35E+04	2 5%	100%	68	5.99E+06	1.12E-05	1 87E-12	2 00E-04	2.13E-11	1 60E-04	7.55E-18	2.79E-08	3.15E+07	3.00E-09	
									Fines						
PU241	2.58E+04	2.5%	10%	68	5 99E+06	1.12E-05	1 87E-12	3.00E-05	2.46E-13	1.60E-04	6.98E-20	2.58E-10	3.15E+07	3 20E-13	
Y 90	2 24E+04	2 5%	10%	68	5 99E+06	1.12E-05	1.87E-12	3.00E-05	2.14E-13	1.60E-04	1.87E-16	6.92E-07	3.15E+07	7.45E-10	
PM147	9 63E+03	2.5%	10%	68	5.99E+06	1.12E-05	1 87E-12	3 00E-05	9.18E-14	1.60E-04	6 75E-19	2 50E-09	3.15E+07	1.16E-12	
CE144	2 48E+03	2 5%	10%	68	5.99E+06	1.12E-05	1 87E-12	3.00E-05	2.36E-14	1.60E-04	8 33E-16	3.08E-06	3.15E+07	3.67E-10	
PR144	2 48E+03	2.5%	10%	68	5.99E+06	1.12E-05	1 87E-12	3.00E-05	2 36E-14	1.60E-04	1 95E-15	7 22E-06	3.15E+07	8.60E-10	
EU154	1.74E+03	2.5%	10%	68	5 99E+06	1.12E-05	1.87E-12	3.00E-05	1 66E-14	1 60E-04	6.15E-14	2 28E-04	3.15E+07	1.90E-08	
CM244	2 38E+03	2.5%	10%	68	5 99E+06	1.12E-05	1.87E-12	3 00E-05	2.27E-14	1.60E-04	4.19E-18	1.55E-08	3.15E+07	1.77E-12	
PU238	1.58E+03	2.5%	10%	68	5 99E+06	1 12E-05	1.87E-12	3.00E-05	1.51E-14	1.60E-04	4 01E-18	1.48E-08	3.15E+07	1.13E-12	
SB125	7 91E+02	2.5%	10%	68	5 99E+06	1.12E-05	1 87E-12	3 00E-05	7.54E-15	1.60E-04	2.01E-14	7.44E-05	3.15E+07	2.83E-09	
EU155	5.41E+02	2.5%	10%	68	5.99E+06	1.12E-05	1.87E-12	3.00E-05	5.16E-15	1.60E-04	2.41E-15	8 92E-06	3.15E+07	2.32E-10	
AM241	2.78E+02	2.5%	10%	68	5.99E+06	1.12E-05	1 87E-12	3 00E-05	2.65E-15	1 60E-04	7.83E-16	2.90E-06	3.15E+07	3 87E-11	
TE125M	1.93E+02	2.5%	10%	68	5 99E+06	1.12E-05	1 87E-12	3.00E-05	1.84E-15	1.60E-04	4 64E-16	1.72E-06	3 15E+07	1.60E-11	
PU240	1 50E+02	2 5%	10%	68	5 99E+06	1.12E-05	1.87E-12	3 00E-05	1.43E-15	1.60E-04	3.92E-18	1.45E-08	3.15E+07	1.05E-13	
SM151	9.76E+01	2.5%	10%	68	5.99E+06	1.12E-05	1.87E-12	3 00E-05	9 31E-16	1.60E-04	3 58E-20	1.32E-10	3.15E+07	6 21E-16	
PU239	6 70E+01	2 5%	10%	68	5 99E+06	1.12E-05	1.87E-12	3 00E-05	6.39E-16	1.60E-04	3 88E-18	1.44E-08	3.15E+07	4.62E-14	
BA137M	3.17E+04	2.5%	10%	68	5 99E+06	1.12E-05	1.87E-12	3 00E-05	3 02E-13	1 60E-04	2.88E-14	1 07E-04	3.15E+07	1.62E-07	
RH106	4.71E+03	2.5%	10%	68	5.99E+06	1.12E-05	1.87E-12	3 00E-05	4.49E-14	1.60E-04	1.03E-14	3.81E-05	3.15E+07	8 63E-09	
PR144M	3 48E+01	2 5%	10%	68	5 99E+06	1.12E-05	1.87E-12	3 00E-05	3 32E-16	1 60E-04	2.81E-16	1.04E-06	3.15E+07	1.74E-12	
AM243	1.36E+01	2 5%	10%	68	5.99E+06	1.12E-05	1 87E-12	3 00E-05	1.30E-16	1.60E-04	2.09E-15	7.73E-06	3 15E+07	5 05E-12	
CM242	9 82E+00	2 5%	10%	68	5 99E+06	1.12E-05	1.87E-12	3.00E-05	9.36E-17	1.60E-04	4.91E-18	1.82E-08	3.15E+07	8.57E-15	
CM243	9 79E+00	2.5%	10%	68	5 99E+06	1.12E-05	1 87E-12	3 00E-05	9.34E-17	1.60E-04	5.76E-15	2.13E-05	3.15E+07	1 00E-11	
NP239	1 36E+01	2 5%	10%	68	5 99E+06	1.12E-05	1.87E-12	3 00E-05	1 30E-16	1 60E-04	7.52E-15	2.78E-05	3.15E+07	1 82E-11	
NP237	1 18E-01	2.5%	10%	68	5 99E+06	1.12E-05	1.87E-12	3.00E-05	1.13E-18	1 60E-04	9 94E-16	3 68E-06	3.15E+07	2.09E-14	
PU242	9 04E-01	2.5%	10%	68	5.99E+06	1.12E-05	1 87E-12	3 00E-05	8.62E-18	1 60E-04	3 32E-18	1.23E-08	3.15E+07	5.34E-16	
AM242	2 71E+00	2 5%	10%	68	5 99E+06	1.12E-05	1.87E-12	3 00E-05	2.58E-17	1.60E-04	5.94E-16	2.20E-06	3.15E+07	2.86E-13	
AM242M	2.72E+00	2.5%	10%	68	5.99E+06	1.12E-05	1 87E-12	3 00E-05	2.59E-17	1.60E-04	2 95E-17	1.09E-07	3.15E+07	1.43E-14	
													Total	2.95E-03	

MPC-68															
Normal Conditions															
Effective Dose Equivalent From Submersion															
Nuclide	Inventory (Ci/Assy)	% available for release	% remain airborne	No Assy	MPC Vol (cm3)	L_{nor} Rate at Upstream (cm3/s)	Fraction Released per sec	Release Fraction	Release Rate (Ci/sec)	X/Q (sec/m3)	DCF (Sv/Bq)	DCF (mRem/uCi)	Occ Time (sec)	DDE (mRem)	
									Gases						
H 3	1.24E+02	2.5%	100%	68	5 99E+06	1.12E-05	1 87E-12	0 30	1 18E-10	1.60E-04	3 31E-19	1 22E-09	3.15E+07	7.28E-10	
I129	1 12E-02	2.5%	100%	68	5.99E+06	1.12E-05	1 87E-12	0.30	1.07E-14	1.60E-04	3 80E-16	1 41E-06	3.15E+07	7.57E-11	
KR 85	2 04E+03	2.5%	100%	68	5.99E+06	1.12E-05	1.87E-12	0 30	1.95E-09	1 60E-04	1.19E-16	4.40E-07	3.15E+07	4.32E-06	
									Crud						
Co-60	6 50E+01	100 0%	100%	68	5 99E+06	1.12E-05	1.87E-12	0.15	1.24E-09	1.60E-04	1.26E-13	4.66E-04	3.15E+07	2.91E-03	
									Volatiles						
SR 90	2.24E+04	2.5%	100%	68	5.99E+06	1.12E-05	1.87E-12	2.00E-04	1.42E-11	1.60E-04	7.53E-18	2.79E-08	3.15E+07	2.00E-09	
RU106	4.71E+03	2 5%	100%	68	5.99E+06	1.12E-05	1.87E-12	2 00E-04	2.99E-12	1 60E-04	0.00E+00	0 00E+00	3.15E+07	0 00E+00	
CS134	1.18E+04	2 5%	100%	68	5.99E+06	1.12E-05	1.87E-12	2.00E-04	7.50E-12	1 60E-04	7.57E-14	2 80E-04	3 15E+07	1.06E-05	
CS137	3 35E+04	2.5%	100%	68	5.99E+06	1.12E-05	1.87E-12	2 00E-04	2.13E-11	1.60E-04	7 74E-18	2.86E-08	3 15E+07	3 07E-09	
									Fines						
PU241	2.58E+04	2 5%	10%	68	5.99E+06	1.12E-05	1 87E-12	3 00E-05	2 46E-13	1.60E-04	7.25E-20	2 68E-10	3.15E+07	3.33E-13	
Y 90	2 24E+04	2 5%	10%	68	5 99E+06	1.12E-05	1 87E-12	3 00E-05	2 14E-13	1 60E-04	1 90E-16	7 03E-07	3 15E+07	7.57E-10	
PM147	9.63E+03	2 5%	10%	68	5 99E+06	1.12E-05	1 87E-12	3.00E-05	9.18E-14	1.60E-04	6 93E-19	2.56E-09	3.15E+07	1.19E-12	
CE144	2 48E+03	2 5%	10%	68	5 99E+06	1.12E-05	1.87E-12	3.00E-05	2.36E-14	1 60E-04	8 53E-16	3.16E-06	3.15E+07	3.76E-10	
PR144	2 48E+03	2.5%	10%	68	5.99E+06	1.12E-05	1 87E-12	3 00E-05	2.36E-14	1 60E-04	1.95E-15	7 22E-06	3.15E+07	8 60E-10	
EU154	1 74E+03	2 5%	10%	68	5.99E+06	1.12E-05	1 87E-12	3 00E-05	1 66E-14	1 60E-04	6.14E-14	2 27E-04	3 15E+07	1.90E-08	
CM244	2 38E+03	2 5%	10%	68	5 99E+06	1.12E-05	1.87E-12	3.00E-05	2.27E-14	1 60E-04	4.91E-18	1 82E-08	3.15E+07	2 08E-12	
PU238	1.58E+03	2.5%	10%	68	5 99E+06	1.12E-05	1 87E-12	3 00E-05	1.51E-14	1 60E-04	4.88E-18	1 81E-08	3.15E+07	1.37E-12	
SB125	7.91E+02	2 5%	10%	68	5 99E+06	1 12E-05	1 87E-12	3 00E-05	7.54E-15	1 60E-04	2 02E-14	7.47E-05	3 15E+07	2 84E-09	
EU155	5 41E+02	2 5%	10%	68	5 99E+06	1.12E-05	1.87E-12	3 00E-05	5.16E-15	1 60E-04	2.49E-15	9 21E-06	3.15E+07	2.40E-10	
AM241	2.78E+02	2 5%	10%	68	5 99E+06	1.12E-05	1.87E-12	3 00E-05	2 65E-15	1 60E-04	8.18E-16	3 03E-06	3.15E+07	4.04E-11	
TE125M	1.93E+02	2.5%	10%	68	5.99E+06	1.12E-05	1 87E-12	3.00E-05	1.84E-15	1.60E-04	4 53E-16	1.68E-06	3.15E+07	1.56E-11	
PU240	1 50E+02	2 5%	10%	68	5 99E+06	1.12E-05	1 87E-12	3.00E-05	1 43E-15	1 60E-04	4 75E-18	1 76E-08	3.15E+07	1.27E-13	
SM151	9 76E+01	2.5%	10%	68	5.99E+06	1.12E-05	1 87E-12	3.00E-05	9 31E-16	1 60E-04	3.61E-20	1 34E-10	3.15E+07	6 27E-16	
PU239	6.70E+01	2 5%	10%	68	5.99E+06	1.12E-05	1.87E-12	3 00E-05	6.39E-16	1.60E-04	4 24E-18	1.57E-08	3.15E+07	5.05E-14	
BA137M	3.17E+04	2.5%	10%	68	5 99E+06	1.12E-05	1.87E-12	3 00E-05	3 02E-13	1.60E-04	2 88E-14	1.07E-04	3.15E+07	1 62E-07	
RH106	4 71E+03	2 5%	10%	68	5 99E+06	1.12E-05	1 87E-12	3.00E-05	4 49E-14	1.60E-04	1.04E-14	3 85E-05	3.15E+07	8.71E-09	
PR144M	3.48E+01	2.5%	10%	68	5 99E+06	1.12E-05	1 87E-12	3 00E-05	3.32E-16	1 60E-04	2.79E-16	1 03E-06	3.15E+07	1.73E-12	
AM243	1 36E+01	2 5%	10%	68	5 99E+06	1.12E-05	1.87E-12	3.00E-05	1.30E-16	1 60E-04	2.18E-15	8 07E-06	3.15E+07	5.27E-12	
CM242	9 82E+00	2 5%	10%	68	5.99E+06	1.12E-05	1 87E-12	3.00E-05	9.36E-17	1.60E-04	5 69E-18	2.11E-08	3.15E+07	9 94E-15	
CM243	9 79E+00	2 5%	10%	68	5 99E+06	1.12E-05	1 87E-12	3 00E-05	9.34E-17	1 60E-04	5 88E-15	2.18E-05	3 15E+07	1.02E-11	
NP239	1.36E+01	2 5%	10%	68	5 99E+06	1 12E-05	1 87E-12	3.00E-05	1 30E-16	1 60E-04	7 69E-15	2 85E-05	3 15E+07	1 86E-11	
NP237	1 18E-01	2 5%	10%	68	5 99E+06	1.12E-05	1.87E-12	3 00E-05	1.13E-18	1.60E-04	1 03E-15	3 81E-06	3 15E+07	2 16E-14	
PU242	9 04E-01	2 5%	10%	68	5 99E+06	1.12E-05	1 87E-12	3 00E-05	8.62E-18	1 60E-04	4 01E-18	1.48E-08	3.15E+07	6.45E-16	
AM242	2.71E+00	2 5%	10%	68	5.99E+06	1 12E-05	1 87E-12	3.00E-05	2 58E-17	1 60E-04	6.15E-16	2 28E-06	3 15E+07	2 96E-13	
AM242M	2 72E+00	2 5%	10%	68	5.99E+06	1.12E-05	1.87E-12	3 00E-05	2 59E-17	1.60E-04	3.17E-17	1.17E-07	3.15E+07	1.53E-14	
													Total	2.93E-03	

MPC-68															
Normal Conditions															
Effective Dose Equivalent From Submersion															
Nuclide	Inventory (Ci/Assy)	% available for release	% remain airborne	No. Assy	MPC Vol (cm3)	L_{nor} Rate at Upstream (cm3/s)	Fraction Released per sec	Release Fraction	Release Rate (Ci/sec)	X/Q (sec/m3)	DCF (Sv/Bq)	DCF (mRem/uCi)	Occ Time (sec)	SDE (mRem)	
									Gases						
H 3	1 24E+02	2 5%	100%	68	5 99E+06	1.12E-05	1 87E-12	0 30	1.18E-10	1 60E-04	0.00E+00	0 00E+00	3.15E+07	0 00E+00	
I129	1 12E-02	2 5%	100%	68	5 99E+06	1.12E-05	1 87E-12	0.30	1 07E-14	1 60E-04	1.10E-15	4 07E-06	3.15E+07	2.19E-10	
KR 85	2.04E+03	2 5%	100%	68	5 99E+06	1.12E-05	1.87E-12	0 30	1.95E-09	1 60E-04	1.32E-14	4.88E-05	3 15E+07	4.79E-04	
									Crud						
Co-60	6 50E+01	100 0%	100%	68	5.99E+06	1.12E-05	1.87E-12	0.15	1.24E-09	1.60E-04	1.45E-13	5.37E-04	3.15E+07	3.35E-03	
									Volatiles						
SR 90	2 24E+04	2 5%	100%	68	5 99E+06	1.12E-05	1 87E-12	2.00E-04	1.42E-11	1.60E-04	9 20E-15	3.40E-05	3.15E+07	2.44E-06	
RU106	4.71E+03	2 5%	100%	68	5 99E+06	1.12E-05	1 87E-12	2.00E-04	2.99E-12	1.60E-04	0.00E+00	0 00E+00	3.15E+07	0 00E+00	
CS134	1.18E+04	2 5%	100%	68	5.99E+06	1.12E-05	1.87E-12	2 00E-04	7.50E-12	1.60E-04	9 45E-14	3 50E-04	3.15E+07	1.32E-05	
CS137	3 35E+04	2 5%	100%	68	5.99E+06	1.12E-05	1 87E-12	2.00E-04	2.13E-11	1 60E-04	8.63E-15	3.19E-05	3 15E+07	3 43E-06	
									Fines						
PU241	2.58E+04	2 5%	10%	68	5.99E+06	1.12E-05	1.87E-12	3 00E-05	2.46E-13	1.60E-04	1.17E-19	4.33E-10	3.15E+07	5.37E-13	
Y 90	2 24E+04	2.5%	10%	68	5 99E+06	1.12E-05	1 87E-12	3 00E-05	2.14E-13	1.60E-04	6.24E-14	2 31E-04	3.15E+07	2.49E-07	
PM147	9.63E+03	2 5%	10%	68	5.99E+06	1.12E-05	1.87E-12	3 00E-05	9.18E-14	1.60E-04	8.11E-16	3 00E-06	3.15E+07	1.39E-09	
CE144	2 48E+03	2 5%	10%	68	5.99E+06	1.12E-05	1.87E-12	3 00E-05	2.36E-14	1 60E-04	2.93E-15	1 08E-05	3.15E+07	1.29E-09	
PR144	2 48E+03	2 5%	10%	68	5 99E+06	1.12E-05	1.87E-12	3 00E-05	2.36E-14	1 60E-04	8 43E-14	3.12E-04	3.15E+07	3.72E-08	
EU154	1 74E+03	2 5%	10%	68	5 99E+06	1.12E-05	1 87E-12	3 00E-05	1.66E-14	1 60E-04	8 29E-14	3.07E-04	3.15E+07	2.57E-08	
CM244	2 38E+03	2 5%	10%	68	5 99E+06	1.12E-05	1.87E-12	3.00E-05	2.27E-14	1.60E-04	3 91E-17	1.45E-07	3.15E+07	1.65E-11	
PU238	1 58E+03	2 5%	10%	68	5 99E+06	1.12E-05	1.87E-12	3 00E-05	1.51E-14	1.60E-04	4 09E-17	1.51E-07	3.15E+07	1.15E-11	
SB125	7 91E+02	2 5%	10%	68	5 99E+06	1.12E-05	1 87E-12	3 00E-05	7 54E-15	1.60E-04	2.65E-14	9 81E-05	3.15E+07	3.73E-09	
EU155	5.41E+02	2 5%	10%	68	5 99E+06	1.12E-05	1.87E-12	3 00E-05	5.16E-15	1 60E-04	3.39E-15	1.25E-05	3.15E+07	3.26E-10	
AM241	2 78E+02	2 5%	10%	68	5.99E+06	1.12E-05	1 87E-12	3.00E-05	2 65E-15	1 60E-04	1.28E-15	4.74E-06	3 15E+07	6 33E-11	
TE125M	1.93E+02	2 5%	10%	68	5 99E+06	1.12E-05	1.87E-12	3 00E-05	1 84E-15	1.60E-04	1.94E-15	7.18E-06	3.15E+07	6.67E-11	
PU240	1.50E+02	2 5%	10%	68	5 99E+06	1.12E-05	1.87E-12	3 00E-05	1.43E-15	1 60E-04	3.92E-17	1.45E-07	3.15E+07	1.05E-12	
SM151	9 76E+01	2 5%	10%	68	5.99E+06	1.12E-05	1 87E-12	3.00E-05	9 31E-16	1.60E-04	1.90E-19	7 03E-10	3.15E+07	3.30E-15	
PU239	6.70E+01	2 5%	10%	68	5 99E+06	1.12E-05	1.87E-12	3.00E-05	6.39E-16	1 60E-04	1.86E-17	6.88E-08	3.15E+07	2.22E-13	
BA137M	3.17E+04	2 5%	10%	68	5 99E+06	1.12E-05	1 87E-12	3.00E-05	3.02E-13	1.60E-04	3.73E-14	1.38E-04	3.15E+07	2.10E-07	
RH106	4.71E+03	2 5%	10%	68	5.99E+06	1.12E-05	1.87E-12	3 00E-05	4.49E-14	1.60E-04	1 09E-13	4 03E-04	3.15E+07	9.13E-08	
PR144M	3 48E+01	2.5%	10%	68	5 99E+06	1.12E-05	1 87E-12	3.00E-05	3 32E-16	1 60E-04	5 08E-16	1 88E-06	3.15E+07	3.14E-12	
AM243	1.36E+01	2 5%	10%	68	5.99E+06	1.12E-05	1 87E-12	3.00E-05	1 30E-16	1 60E-04	2.75E-15	1.02E-05	3 15E+07	6.65E-12	
CM242	9 82E+00	2 5%	10%	68	5.99E+06	1.12E-05	1.87E-12	3 00E-05	9 36E-17	1 60E-04	4.29E-17	1 59E-07	3.15E+07	7.49E-14	
CM243	9 79E+00	2.5%	10%	68	5.99E+06	1.12E-05	1 87E-12	3.00E-05	9 34E-17	1.60E-04	9.79E-15	3 62E-05	3.15E+07	1.70E-11	
NP239	1.36E+01	2 5%	10%	68	5.99E+06	1 12E-05	1 87E-12	3 00E-05	1.30E-16	1 60E-04	1.60E-14	5 92E-05	3.15E+07	3.87E-11	
NP237	1.18E-01	2 5%	10%	68	5.99E+06	1.12E-05	1.87E-12	3 00E-05	1.13E-18	1 60E-04	1.54E-15	5.70E-06	3 15E+07	3.23E-14	
PU242	9.04E-01	2 5%	10%	68	5.99E+06	1.12E-05	1.87E-12	3 00E-05	8 62E-18	1 60E-04	3.27E-17	1 21E-07	3 15E+07	5 26E-15	
AM242	2 71E+00	2.5%	10%	68	5 99E+06	1.12E-05	1 87E-12	3.00E-05	2.58E-17	1.60E-04	8 20E-15	3.03E-05	3.15E+07	3.95E-12	
AM242M	2.72E+00	2 5%	10%	68	5 99E+06	1.12E-05	1.87E-12	3.00E-05	2.59E-17	1.60E-04	1.36E-16	5 03E-07	3.15E+07	6 58E-14	
													Total	3 85E-03	

MPC-68															
Off-Normal Conditions															
Effective Dose Equivalent From Submersion															
Nuclide	Inventory (Ci/Assy)	% available for release	% remain airborne	No. Assy	MPC Vol (cm3)	L_{offnor} Rate at Upstream (cm3/s)	Fraction Released per sec	Release Fraction	Release Rate (Ci/sec)	X/Q (sec/m3)	DCF (Sv/Bq)	DCF (mRem/uCi)	Occ Time (sec)	DDE (mRem)	
									Gases						
H 3	1.24E+02	11 5%	100%	68	5.99E+06	1 12E-05	1.87E-12	0 30	5.43E-10	1.60E-04	0 00E+00	0.00E+00	3.15E+07	0 00E+00	
I129	1 12E-02	11 5%	100%	68	5.99E+06	1.12E-05	1 87E-12	0.30	4 91E-14	1.60E-04	4.83E-16	1.79E-06	3.15E+07	4 43E-10	
KR 85	2 04E+03	11 5%	100%	68	5 99E+06	1.12E-05	1.87E-12	0 30	8.95E-09	1.60E-04	1.17E-16	4.33E-07	3.15E+07	1 95E-05	
									Crud						
Co-60	6 50E+01	100 0%	100%	68	5 99E+06	1.12E-05	1.87E-12	0.15	1.24E-09	1.60E-04	1 23E-13	4.55E-04	3.15E+07	2 84E-03	
									Volatiles						
SR 90	2 24E+04	11.5%	100%	68	5 99E+06	1.12E-05	1.87E-12	2 00E-04	6 55E-11	1 60E-04	7.78E-18	2.88E-08	3.15E+07	9.50E-09	
RU106	4 71E+03	11.5%	100%	68	5.99E+06	1.12E-05	1.87E-12	2 00E-04	1 38E-11	1 60E-04	0.00E+00	0 00E+00	3.15E+07	0.00E+00	
CS134	1.18E+04	11 5%	100%	68	5.99E+06	1.12E-05	1.87E-12	2.00E-04	3 45E-11	1.60E-04	7.40E-14	2.74E-04	3.15E+07	4.76E-05	
CS137	3 35E+04	11 5%	100%	68	5.99E+06	1.12E-05	1 87E-12	2.00E-04	9 80E-11	1.60E-04	7.96E-18	2 95E-08	3.15E+07	1 45E-08	
									Fines						
PU241	2 58E+04	11 5%	10%	68	5 99E+06	1.12E-05	1 87E-12	3 00E-05	1.13E-12	1 60E-04	7.19E-20	2.66E-10	3.15E+07	1 52E-12	
Y 90	2.24E+04	11 5%	10%	68	5 99E+06	1.12E-05	1.87E-12	3.00E-05	9.83E-13	1.60E-04	1.89E-16	6.99E-07	3.15E+07	3 46E-09	
PM147	9 63E+03	11 5%	10%	68	5 99E+06	1.12E-05	1 87E-12	3.00E-05	4.22E-13	1.60E-04	7.48E-19	2.77E-09	3.15E+07	5 89E-12	
CE144	2.48E+03	11.5%	10%	68	5 99E+06	1.12E-05	1.87E-12	3 00E-05	1 09E-13	1 60E-04	8.53E-16	3 16E-06	3 15E+07	1.73E-09	
PR144	2.48E+03	11 5%	10%	68	5.99E+06	1.12E-05	1.87E-12	3 00E-05	1 09E-13	1.60E-04	1 90E-15	7.03E-06	3.15E+07	3 85E-09	
EU154	1.74E+03	11 5%	10%	68	5.99E+06	1 12E-05	1.87E-12	3 00E-05	7 63E-14	1 60E-04	6 00E-14	2.22E-04	3.15E+07	8 54E-08	
CM244	2.38E+03	11 5%	10%	68	5.99E+06	1.12E-05	1 87E-12	3 00E-05	1 04E-13	1 60E-04	6 90E-18	2.55E-08	3 15E+07	1 34E-11	
PU238	1 58E+03	11 5%	10%	68	5 99E+06	1.12E-05	1.87E-12	3.00E-05	6.93E-14	1 60E-04	6.56E-18	2.43E-08	3.15E+07	8.48E-12	
SB125	7.91E+02	11 5%	10%	68	5 99E+06	1.12E-05	1 87E-12	3 00E-05	3.47E-14	1.60E-04	1.98E-14	7.33E-05	3 15E+07	1.28E-08	
EU155	5 41E+02	11.5%	10%	68	5 99E+06	1.12E-05	1.87E-12	3 00E-05	2 37E-14	1.60E-04	2 49E-15	9.21E-06	3.15E+07	1 10E-09	
AM241	2.78E+02	11.5%	10%	68	5.99E+06	1.12E-05	1.87E-12	3 00E-05	1.22E-14	1 60E-04	8 58E-16	3.17E-06	3.15E+07	1.95E-10	
TE125M	1.93E+02	11 5%	10%	68	5 99E+06	1.12E-05	1.87E-12	3.00E-05	8.48E-15	1.60E-04	5 96E-16	2 21E-06	3 15E+07	9 43E-11	
PU240	1 50E+02	11.5%	10%	68	5 99E+06	1.12E-05	1 87E-12	3 00E-05	6 58E-15	1 60E-04	6 36E-18	2 35E-08	3.15E+07	7 80E-13	
SM151	9.76E+01	11 5%	10%	68	5.99E+06	1.12E-05	1 87E-12	3.00E-05	4.28E-15	1 60E-04	5.20E-20	1.92E-10	3.15E+07	4.15E-15	
PU239	6 70E+01	11.5%	10%	68	5.99E+06	1 12E-05	1.87E-12	3.00E-05	2 94E-15	1.60E-04	4.84E-18	1.79E-08	3.15E+07	2 65E-13	
BA137M	3 17E+04	11 5%	10%	68	5 99E+06	1 12E-05	1 87E-12	3 00E-05	1 39E-12	1 60E-04	2 82E-14	1 04E-04	3.15E+07	7.31E-07	
RH106	4.71E+03	11 5%	10%	68	5.99E+06	1.12E-05	1.87E-12	3 00E-05	2.07E-13	1 60E-04	1 01E-14	3 74E-05	3.15E+07	3 89E-08	
PR144M	3 48E+01	11 5%	10%	68	5 99E+06	1.12E-05	1.87E-12	3 00E-05	1.53E-15	1 60E-04	3 25E-16	1 20E-06	3.15E+07	9.25E-12	
AM243	1 36E+01	11 5%	10%	68	5 99E+06	1.12E-05	1 87E-12	3.00E-05	5 97E-16	1.60E-04	2.19E-15	8 10E-06	3.15E+07	2 44E-11	
CM242	9 82E+00	11.5%	10%	68	5.99E+06	1 12E-05	1.87E-12	3 00E-05	4 31E-16	1 60E-04	7 83E-18	2 90E-08	3.15E+07	6 29E-14	
CM243	9 79E+00	11 5%	10%	68	5 99E+06	1.12E-05	1 87E-12	3 00E-05	4 29E-16	1.60E-04	5 77E-15	2 13E-05	3.15E+07	4 62E-11	
NP239	1.36E+01	11 5%	10%	68	5 99E+06	1.12E-05	1 87E-12	3 00E-05	5 97E-16	1 60E-04	7 53E-15	2.79E-05	3 15E+07	8 38E-11	
NP237	1 18E-01	11 5%	10%	68	5 99E+06	1 12E-05	1.87E-12	3 00E-05	5 18E-18	1.60E-04	1 04E-15	3.85E-06	3 15E+07	1.00E-13	
PU242	9 04E-01	11.5%	10%	68	5 99E+06	1.12E-05	1.87E-12	3 00E-05	3.97E-17	1 60E-04	5.34E-18	1 98E-08	3.15E+07	3 95E-15	
AM242	2 71E+00	11 5%	10%	68	5 99E+06	1.12E-05	1 87E-12	3 00E-05	1.19E-16	1.60E-04	6.09E-16	2 25E-06	3.15E+07	1.35E-12	
AM242M	2 72E+00	11.5%	10%	68	5.99E+06	1.12E-05	1 87E-12	3 00E-05	1.19E-16	1.60E-04	3 80E-17	1.41E-07	3.15E+07	8 45E-14	
													Total	2 91E-03	

MPC-68														
Off-Normal Conditions														
Effective Dose Equivalent From Submersion														
Nuclide	Inventory (Ci/Assy)	% available for release	% remain airborne	No Assy	MPC Vol (cm3)	L_{offnor} Rate at Upstream (cm3/s)	Fraction Released per sec	Release Fraction	Release Rate (Ci/sec)	X/Q (sec/m3)	DCF (Sv/Bq)	DCF (mRem/uCi)	Occ Time (sec)	DDE (mRem)
									Gases					
H 3	1.24E+02	11 5%	100%	68	5.99E+06	1.12E-05	1.87E-12	0.30	5 43E-10	1.60E-04	0 00E+00	0 00E+00	3.15E+07	0 00E+00
I129	1.12E-02	11 5%	100%	68	5 99E+06	1.12E-05	1 87E-12	0.30	4.91E-14	1.60E-04	6 66E-16	2.46E-06	3.15E+07	6.10E-10
KR 85	2.04E+03	11 5%	100%	68	5.99E+06	1.12E-05	1.87E-12	0.30	8.95E-09	1 60E-04	1.34E-16	4 96E-07	3.15E+07	2.24E-05
									Crud					
Co-60	6.50E+01	100 0%	100%	68	5 99E+06	1.12E-05	1.87E-12	0.15	1.24E-09	1 60E-04	1.39E-13	5.14E-04	3.15E+07	3 21E-03
									Volatiles					
SR 90	2.24E+04	11.5%	100%	68	5 99E+06	1.12E-05	1.87E-12	2.00E-04	6.55E-11	1.60E-04	9.49E-18	3 51E-08	3.15E+07	1.16E-08
RU106	4.71E+03	11.5%	100%	68	5.99E+06	1.12E-05	1.87E-12	2.00E-04	1.38E-11	1 60E-04	0 00E+00	0 00E+00	3.15E+07	0 00E+00
CS134	1.18E+04	11 5%	100%	68	5 99E+06	1.12E-05	1.87E-12	2 00E-04	3.45E-11	1 60E-04	8.43E-14	3.12E-04	3.15E+07	5.42E-05
CS137	3 35E+04	11 5%	100%	68	5 99E+06	1.12E-05	1 87E-12	2 00E-04	9 80E-11	1.60E-04	9.67E-18	3.58E-08	3.15E+07	1.77E-08
									Fines					
PU241	2.58E+04	11.5%	10%	68	5 99E+06	1.12E-05	1 87E-12	3.00E-05	1.13E-12	1 60E-04	8 67E-20	3.21E-10	3.15E+07	1 83E-12
Y 90	2 24E+04	11 5%	10%	68	5 99E+06	1.12E-05	1.87E-12	3 00E-05	9 83E-13	1.60E-04	2.20E-16	8.14E-07	3.15E+07	4.03E-09
PM147	9 63E+03	11 5%	10%	68	5 99E+06	1.12E-05	1.87E-12	3.00E-05	4.22E-13	1 60E-04	9 56E-19	3 54E-09	3.15E+07	7.53E-12
CE144	2 48E+03	11.5%	10%	68	5.99E+06	1.12E-05	1 87E-12	3 00E-05	1 09E-13	1.60E-04	1.01E-15	3.74E-06	3.15E+07	2.05E-09
PR144	2 48E+03	11.5%	10%	68	5.99E+06	1.12E-05	1 87E-12	3 00E-05	1.09E-13	1.60E-04	2.15E-15	7.96E-06	3.15E+07	4.36E-09
EU154	1.74E+03	11.5%	10%	68	5 99E+06	1.12E-05	1 87E-12	3 00E-05	7.63E-14	1 60E-04	6.81E-14	2.52E-04	3.15E+07	9.69E-08
CM244	2 38E+03	11.5%	10%	68	5.99E+06	1.12E-05	1.87E-12	3.00E-05	1.04E-13	1.60E-04	1.33E-17	4.92E-08	3.15E+07	2.59E-11
PU238	1.58E+03	11.5%	10%	68	5 99E+06	1.12E-05	1 87E-12	3.00E-05	6.93E-14	1.60E-04	1.27E-17	4.70E-08	3.15E+07	1.64E-11
SB125	7 91E+02	11.5%	10%	68	5 99E+06	1.12E-05	1.87E-12	3 00E-05	3.47E-14	1.60E-04	2 27E-14	8 40E-05	3.15E+07	1.47E-08
EU155	5.41E+02	11.5%	10%	68	5.99E+06	1.12E-05	1 87E-12	3 00E-05	2.37E-14	1 60E-04	2.95E-15	1.09E-05	3.15E+07	1.31E-09
AM241	2.78E+02	11 5%	10%	68	5 99E+06	1.12E-05	1.87E-12	3 00E-05	1.22E-14	1 60E-04	1.07E-15	3 96E-06	3.15E+07	2.43E-10
TE125M	1 93E+02	11.5%	10%	68	5.99E+06	1.12E-05	1.87E-12	3 00E-05	8.48E-15	1.60E-04	8 48E-16	3.14E-06	3.15E+07	1.34E-10
PU240	1.50E+02	11 5%	10%	68	5 99E+06	1.12E-05	1.87E-12	3 00E-05	6 58E-15	1.60E-04	1.23E-17	4.55E-08	3.15E+07	1.51E-12
SM151	9 76E+01	11 5%	10%	68	5 99E+06	1.12E-05	1.87E-12	3 00E-05	4.28E-15	1.60E-04	8.80E-20	3.26E-10	3.15E+07	7 03E-15
PU239	6.70E+01	11 5%	10%	68	5 99E+06	1.12E-05	1 87E-12	3.00E-05	2 94E-15	1.60E-04	7.55E-18	2.79E-08	3.15E+07	4.14E-13
BA137M	3.17E+04	11 5%	10%	68	5 99E+06	1.12E-05	1.87E-12	3.00E-05	1.39E-12	1.60E-04	3.22E-14	1.19E-04	3.15E+07	8.35E-07
RH106	4.71E+03	11 5%	10%	68	5.99E+06	1.12E-05	1 87E-12	3 00E-05	2.07E-13	1.60E-04	1.16E-14	4 29E-05	3.15E+07	4 47E-08
PR144M	3 48E+01	11 5%	10%	68	5.99E+06	1.12E-05	1 87E-12	3 00E-05	1.53E-15	1.60E-04	4.20E-16	1.55E-06	3.15E+07	1.20E-11
AM243	1.36E+01	11.5%	10%	68	5.99E+06	1.12E-05	1.87E-12	3 00E-05	5.97E-16	1 60E-04	2 61E-15	9 66E-06	3.15E+07	2.90E-11
CM242	9 82E+00	11 5%	10%	68	5 99E+06	1.12E-05	1.87E-12	3 00E-05	4.31E-16	1.60E-04	1.48E-17	5 48E-08	3.15E+07	1.19E-13
CM243	9.79E+00	11.5%	10%	68	5.99E+06	1.12E-05	1 87E-12	3.00E-05	4.29E-16	1 60E-04	6 68E-15	2.47E-05	3.15E+07	5.35E-11
NP239	1.36E+01	11.5%	10%	68	5 99E+06	1.12E-05	1.87E-12	3 00E-05	5 97E-16	1.60E-04	8.73E-15	3.23E-05	3.15E+07	9.71E-11
NP237	1.18E-01	11.5%	10%	68	5 99E+06	1.12E-05	1.87E-12	3 00E-05	5.18E-18	1.60E-04	1.26E-15	4 66E-06	3.15E+07	1.22E-13
PU242	9 04E-01	11.5%	10%	68	5 99E+06	1.12E-05	1 87E-12	3.00E-05	3.97E-17	1.60E-04	1 03E-17	3 81E-08	3.15E+07	7.62E-15
AM242	2 71E+00	11.5%	10%	68	5 99E+06	1.12E-05	1.87E-12	3.00E-05	1.19E-16	1 60E-04	7.30E-16	2.70E-06	3.15E+07	1.62E-12
AM242M	2.72E+00	11 5%	10%	68	5.99E+06	1.12E-05	1.87E-12	3 00E-05	1.19E-16	1.60E-04	6 01E-17	2 22E-07	3.15E+07	1.34E-13
													Total	3 29E-03

MPC-68															
Off-Normal Conditions															
Effective Dose Equivalent From Submersion															
Nuclide	Inventory (Ci/Assy)	% available for release	% remain airborne	No. Assy	MPC Vol (cm3)	L_{offnor} Rate at Upstream (cm3/s)	Fraction Released per sec	Release Fraction	Release Rate (Ci/sec)	X/Q (sec/m3)	DCF (Sv/Bq)	DCF (mRem/uCi)	Occ Time (sec)	DDE (mRem)	
									Gases						
H 3	1.24E+02	11.5%	100%	68	5.99E+06	1.12E-05	1 87E-12	0.30	5.43E-10	1.60E-04	2 75E-18	1 02E-08	3.15E+07	2 78E-08	
I129	1 12E-02	11 5%	100%	68	5 99E+06	1.12E-05	1.87E-12	0 30	4.91E-14	1 60E-04	2.14E-16	7.92E-07	3.15E+07	1.96E-10	
KR 85	2.04E+03	11 5%	100%	68	5 99E+06	1.12E-05	1.87E-12	0.30	8.95E-09	1.60E-04	1.14E-16	4.22E-07	3.15E+07	1.90E-05	
									Crud						
Co-60	6 50E+01	100.0%	100%	68	5 99E+06	1.12E-05	1.87E-12	0.15	1.24E-09	1.60E-04	1.24E-13	4 59E-04	3.15E+07	2.87E-03	
									Volatiles						
SR 90	2 24E+04	11.5%	100%	68	5.99E+06	1.12E-05	1 87E-12	2 00E-04	6.55E-11	1.60E-04	6 44E-18	2 38E-08	3 15E+07	7.87E-09	
RU106	4 71E+03	11.5%	100%	68	5 99E+06	1.12E-05	1.87E-12	2.00E-04	1.38E-11	1.60E-04	0.00E+00	0.00E+00	3.15E+07	0.00E+00	
CS134	1 18E+04	11.5%	100%	68	5.99E+06	1.12E-05	1.87E-12	2.00E-04	3.45E-11	1 60E-04	7.37E-14	2.73E-04	3.15E+07	4.74E-05	
CS137	3 35E+04	11.5%	100%	68	5.99E+06	1.12E-05	1 87E-12	2 00E-04	9.80E-11	1.60E-04	6.68E-18	2 47E-08	3.15E+07	1 22E-08	
									Fines						
PU241	2 58E+04	11.5%	10%	68	5.99E+06	1.12E-05	1.87E-12	3 00E-05	1.13E-12	1.60E-04	6.48E-20	2.40E-10	3.15E+07	1.37E-12	
Y 90	2 24E+04	11.5%	10%	68	5.99E+06	1.12E-05	1.87E-12	3 00E-05	9.83E-13	1 60E-04	1.77E-16	6 55E-07	3.15E+07	3.24E-09	
PM147	9.63E+03	11 5%	10%	68	5 99E+06	1.12E-05	1.87E-12	3 00E-05	4 22E-13	1.60E-04	5.45E-19	2.02E-09	3.15E+07	4.29E-12	
CE144	2 48E+03	11.5%	10%	68	5 99E+06	1 12E-05	1.87E-12	3 00E-05	1.09E-13	1 60E-04	7 69E-16	2.85E-06	3.15E+07	1.56E-09	
PR144	2.48E+03	11.5%	10%	68	5 99E+06	1.12E-05	1 87E-12	3 00E-05	1.09E-13	1 60E-04	1.90E-15	7.03E-06	3.15E+07	3 85E-09	
EU154	1 74E+03	11.5%	10%	68	5.99E+06	1.12E-05	1 87E-12	3 00E-05	7.63E-14	1.60E-04	5 99E-14	2 22E-04	3 15E+07	8 53E-08	
CM244	2 38E+03	11.5%	10%	68	5.99E+06	1.12E-05	1 87E-12	3.00E-05	1 04E-13	1.60E-04	7 08E-19	2.62E-09	3.15E+07	1.38E-12	
PU238	1.58E+03	11 5%	10%	68	5.99E+06	1.12E-05	1.87E-12	3.00E-05	6 93E-14	1.60E-04	1.06E-18	3 92E-09	3.15E+07	1 37E-12	
SB125	7 91E+02	11 5%	10%	68	5 99E+06	1.12E-05	1.87E-12	3 00E-05	3.47E-14	1.60E-04	1 95E-14	7.22E-05	3.15E+07	1.26E-08	
EU155	5 41E+02	11.5%	10%	68	5 99E+06	1.12E-05	1.87E-12	3 00E-05	2.37E-14	1 60E-04	2.22E-15	8 21E-06	3.15E+07	9 82E-10	
AM241	2.78E+02	11 5%	10%	68	5 99E+06	1.12E-05	1.87E-12	3 00E-05	1.22E-14	1.60E-04	6 74E-16	2.49E-06	3.15E+07	1 53E-10	
TE125M	1 93E+02	11.5%	10%	68	5 99E+06	1.12E-05	1 87E-12	3 00E-05	8.48E-15	1 60E-04	2 23E-16	8 25E-07	3.15E+07	3.53E-11	
PU240	1 50E+02	11.5%	10%	68	5 99E+06	1.12E-05	1 87E-12	3 00E-05	6 58E-15	1.60E-04	1.09E-18	4.03E-09	3 15E+07	1 34E-13	
SM151	9.76E+01	11.5%	10%	68	5.99E+06	1.12E-05	1.87E-12	3 00E-05	4 28E-15	1.60E-04	7.08E-21	2.62E-11	3.15E+07	5 65E-16	
PU239	6 70E+01	11.5%	10%	68	5 99E+06	1.12E-05	1.87E-12	3 00E-05	2.94E-15	1 60E-04	2 65E-18	9 81E-09	3.15E+07	1.45E-13	
BA137M	3.17E+04	11.5%	10%	68	5.99E+06	1.12E-05	1.87E-12	3 00E-05	1.39E-12	1.60E-04	2.80E-14	1.04E-04	3.15E+07	7.26E-07	
RH106	4.71E+03	11.5%	10%	68	5 99E+06	1.12E-05	1 87E-12	3 00E-05	2.07E-13	1 60E-04	1.01E-14	3.74E-05	3 15E+07	3.89E-08	
PR144M	3 48E+01	11 5%	10%	68	5 99E+06	1.12E-05	1.87E-12	3 00E-05	1.53E-15	1 60E-04	2.00E-16	7.40E-07	3.15E+07	5.69E-12	
AM243	1.36E+01	11 5%	10%	68	5.99E+06	1.12E-05	1.87E-12	3.00E-05	5.97E-16	1.60E-04	1 92E-15	7.10E-06	3 15E+07	2.14E-11	
CM242	9 82E+00	11.5%	10%	68	5.99E+06	1.12E-05	1.87E-12	3 00E-05	4 31E-16	1 60E-04	1.13E-18	4 18E-09	3.15E+07	9 08E-15	
CM243	9.79E+00	11.5%	10%	68	5.99E+06	1.12E-05	1 87E-12	3.00E-05	4 29E-16	1 60E-04	5 50E-15	2 04E-05	3 15E+07	4.40E-11	
NP239	1.36E+01	11 5%	10%	68	5 99E+06	1 12E-05	1.87E-12	3.00E-05	5 97E-16	1.60E-04	7.18E-15	2 66E-05	3 15E+07	7.99E-11	
NP237	1 18E-01	11 5%	10%	68	5 99E+06	1.12E-05	1.87E-12	3 00E-05	5.18E-18	1.60E-04	9.02E-16	3.34E-06	3.15E+07	8 71E-14	
PU242	9.04E-01	11 5%	10%	68	5.99E+06	1 12E-05	1 87E-12	3.00E-05	3 97E-17	1 60E-04	9 69E-19	3 59E-09	3.15E+07	7.17E-16	
AM242	2 71E+00	11.5%	10%	68	5 99E+06	1 12E-05	1.87E-12	3 00E-05	1.19E-16	1.60E-04	5 51E-16	2 04E-06	3.15E+07	1 22E-12	
AM242M	2 72E+00	11.5%	10%	68	5 99E+06	1.12E-05	1 87E-12	3 00E-05	1.19E-16	1.60E-04	1.72E-17	6.36E-08	3.15E+07	3 83E-14	
													Total	2.93E-03	

MPC-68															
Off-Normal Conditions															
Effective Dose Equivalent From Submersion															
Nuclide	Inventory (Ci/Assy)	% available for release	% remain airborne	No. Assy	MPC Vol (cm3)	L_{offnor} Rate at Upstream (cm3/s)	Fraction Released per sec	Release Fraction	Release Rate (Ci/sec)	X/Q (sec/m3)	DCF (Sv/Bq)	DCF (mRem/uCi)	Occ Time (sec)	DDE (mRem)	
									Gases						
H 3	1.24E+02	11.5%	100%	68	5.99E+06	1.12E-05	1.87E-12	0.30	5 43E-10	1.60E-04	0.00E+00	0.00E+00	3.15E+07	0 00E+00	
I129	1.12E-02	11 5%	100%	68	5.99E+06	1.12E-05	1 87E-12	0 30	4 91E-14	1 60E-04	1.64E-16	6 07E-07	3.15E+07	1.50E-10	
KR 85	2 04E+03	11.5%	100%	68	5 99E+06	1.12E-05	1.87E-12	0 30	8 95E-09	1 60E-04	1 09E-16	4.03E-07	3 15E+07	1.82E-05	
									Crud						
Co-60	6.50E+01	100 0%	100%	68	5 99E+06	1.12E-05	1 87E-12	0 15	1 24E-09	1 60E-04	1.23E-13	4 55E-04	3.15E+07	2.84E-03	
									Volatiles						
SR 90	2 24E+04	11 5%	100%	68	5.99E+06	1.12E-05	1 87E-12	2 00E-04	6 55E-11	1.60E-04	5.44E-18	2.01E-08	3.15E+07	6 65E-09	
RU106	4.71E+03	11 5%	100%	68	5 99E+06	1.12E-05	1 87E-12	2 00E-04	1 38E-11	1 60E-04	0 00E+00	0 00E+00	3 15E+07	0.00E+00	
CS134	1.18E+04	11 5%	100%	68	5.99E+06	1.12E-05	1.87E-12	2 00E-04	3 45E-11	1.60E-04	7.19E-14	2 66E-04	3.15E+07	4.63E-05	
CS137	3 35E+04	11 5%	100%	68	5.99E+06	1.12E-05	1.87E-12	2 00E-04	9 80E-11	1 60E-04	5.70E-18	2.11E-08	3.15E+07	1.04E-08	
									Fines						
PU241	2.58E+04	11 5%	10%	68	5 99E+06	1.12E-05	1.87E-12	3 00E-05	1.13E-12	1.60E-04	5.63E-20	2.08E-10	3 15E+07	1.19E-12	
Y 90	2.24E+04	11.5%	10%	68	5.99E+06	1.12E-05	1.87E-12	3 00E-05	9.83E-13	1.60E-04	1.62E-16	5.99E-07	3.15E+07	2 97E-09	
PM147	9 63E+03	11 5%	10%	68	5 99E+06	1.12E-05	1.87E-12	3 00E-05	4 22E-13	1 60E-04	4.46E-19	1 65E-09	3.15E+07	3 51E-12	
CE144	2 48E+03	11 5%	10%	68	5.99E+06	1.12E-05	1 87E-12	3 00E-05	1 09E-13	1 60E-04	6 68E-16	2.47E-06	3.15E+07	1.36E-09	
PR144	2.48E+03	11.5%	10%	68	5 99E+06	1.12E-05	1.87E-12	3.00E-05	1.09E-13	1.60E-04	1.87E-15	6 92E-06	3 15E+07	3 79E-09	
EU154	1.74E+03	11 5%	10%	68	5 99E+06	1.12E-05	1 87E-12	3 00E-05	7 63E-14	1 60E-04	5 87E-14	2 17E-04	3 15E+07	8 35E-08	
CM244	2 38E+03	11 5%	10%	68	5.99E+06	1.12E-05	1.87E-12	3.00E-05	1.04E-13	1.60E-04	1.46E-18	5 40E-09	3.15E+07	2.84E-12	
PU238	1 58E+03	11.5%	10%	68	5.99E+06	1.12E-05	1.87E-12	3 00E-05	6.93E-14	1 60E-04	1.68E-18	6 22E-09	3.15E+07	2.17E-12	
SB125	7 91E+02	11 5%	10%	68	5 99E+06	1.12E-05	1 87E-12	3 00E-05	3 47E-14	1 60E-04	1.87E-14	6.92E-05	3 15E+07	1.21E-08	
EU155	5.41E+02	11.5%	10%	68	5 99E+06	1.12E-05	1.87E-12	3.00E-05	2.37E-14	1 60E-04	1.85E-15	6 85E-06	3.15E+07	8.19E-10	
AM241	2 78E+02	11 5%	10%	68	5 99E+06	1.12E-05	1 87E-12	3 00E-05	1.22E-14	1.60E-04	5.21E-16	1.93E-06	3.15E+07	1.18E-10	
TE125M	1.93E+02	11 5%	10%	68	5.99E+06	1.12E-05	1.87E-12	3 00E-05	8 48E-15	1 60E-04	1.86E-16	6 88E-07	3.15E+07	2.94E-11	
PU240	1.50E+02	11.5%	10%	68	5 99E+06	1.12E-05	1.87E-12	3 00E-05	6.58E-15	1.60E-04	1.65E-18	6.11E-09	3.15E+07	2 02E-13	
SM151	9.76E+01	11.5%	10%	68	5 99E+06	1 12E-05	1 87E-12	3 00E-05	4.28E-15	1 60E-04	1.13E-20	4.18E-11	3 15E+07	9 02E-16	
PU239	6.70E+01	11.5%	10%	68	5 99E+06	1.12E-05	1.87E-12	3 00E-05	2.94E-15	1.60E-04	2.67E-18	9 88E-09	3.15E+07	1.46E-13	
BA137M	3.17E+04	11.5%	10%	68	5 99E+06	1.12E-05	1.87E-12	3 00E-05	1.39E-12	1 60E-04	2.73E-14	1.01E-04	3 15E+07	7.08E-07	
RH106	4.71E+03	11.5%	10%	68	5.99E+06	1.12E-05	1.87E-12	3.00E-05	2.07E-13	1.60E-04	9.75E-15	3.61E-05	3.15E+07	3.76E-08	
PR144M	3.48E+01	11.5%	10%	68	5 99E+06	1.12E-05	1.87E-12	3.00E-05	1.53E-15	1 60E-04	1.56E-16	5.77E-07	3.15E+07	4.44E-12	
AM243	1 36E+01	11 5%	10%	68	5 99E+06	1.12E-05	1 87E-12	3 00E-05	5 97E-16	1.60E-04	1.55E-15	5.74E-06	3.15E+07	1.72E-11	
CM242	9 82E+00	11 5%	10%	68	5 99E+06	1.12E-05	1.87E-12	3 00E-05	4.31E-16	1.60E-04	1.89E-18	6.99E-09	3.15E+07	1.52E-14	
CM243	9.79E+00	11 5%	10%	68	5.99E+06	1.12E-05	1.87E-12	3 00E-05	4 29E-16	1 60E-04	5 00E-15	1.85E-05	3.15E+07	4 00E-11	
NP239	1 36E+01	11 5%	10%	68	5 99E+06	1.12E-05	1.87E-12	3 00E-05	5 97E-16	1 60E-04	6.50E-15	2.41E-05	3.15E+07	7.23E-11	
NP237	1.18E-01	11.5%	10%	68	5 99E+06	1.12E-05	1.87E-12	3 00E-05	5.18E-18	1.60E-04	7.69E-16	2.85E-06	3.15E+07	7.42E-14	
PU242	9 04E-01	11.5%	10%	68	5 99E+06	1.12E-05	1 87E-12	3 00E-05	3.97E-17	1.60E-04	1.43E-18	5 29E-09	3.15E+07	1.06E-15	
AM242	2.71E+00	11.5%	10%	68	5.99E+06	1.12E-05	1.87E-12	3 00E-05	1.19E-16	1 60E-04	4.77E-16	1.76E-06	3.15E+07	1 06E-12	
AM242M	2.72E+00	11 5%	10%	68	5.99E+06	1.12E-05	1 87E-12	3 00E-05	1.19E-16	1.60E-04	1.72E-17	6.36E-08	3.15E+07	3 83E-14	
													Total	2 91E-03	

MPC-68															
Off-Normal Conditions															
Effective Dose Equivalent From Submersion															
Nuclide	Inventory (Ci/Assy)	% available for release	% remain airborne	No Assy	MPC Vol (cm3)	L_{offnor} Rate at Upstream (cm3/s)	Fraction Released per sec	Release Fraction	Release Rate (Ci/sec)	X/Q (sec/m3)	DCF (Sv/Bq)	DCF (mRem/uCi)	Occ Time (sec)	DDE (mRem)	
									Gases						
H 3	1.24E+02	11.5%	100%	68	5.99E+06	1.12E-05	1.87E-12	0 30	5.43E-10	1 60E-04	0.00E+00	0 00E+00	3.15E+07	0 00E+00	
I129	1.12E-02	11 5%	100%	68	5 99E+06	1.12E-05	1.87E-12	0.30	4.91E-14	1.60E-04	1.10E-15	4.07E-06	3 15E+07	1 01E-09	
KR 85	2 04E+03	11 5%	100%	68	5 99E+06	1.12E-05	1.87E-12	0 30	8 95E-09	1 60E-04	2 20E-16	8.14E-07	3.15E+07	3 67E-05	
									Crud						
Co-60	6.50E+01	100 0%	100%	68	5 99E+06	1.12E-05	1 87E-12	0.15	1.24E-09	1 60E-04	1.78E-13	6.59E-04	3 15E+07	4.11E-03	
									Volatiles						
SR 90	2 24E+04	11.5%	100%	68	5 99E+06	1.12E-05	1.87E-12	2 00E-04	6.55E-11	1 60E-04	2.28E-17	8.44E-08	3.15E+07	2.79E-08	
RU106	4 71E+03	11.5%	100%	68	5 99E+06	1.12E-05	1.87E-12	2 00E-04	1.38E-11	1 60E-04	0.00E+00	0 00E+00	3.15E+07	0 00E+00	
CS134	1.18E+04	11.5%	100%	68	5 99E+06	1.12E-05	1.87E-12	2.00E-04	3.45E-11	1.60E-04	1.20E-13	4.44E-04	3.15E+07	7.72E-05	
CS137	3 35E+04	11.5%	100%	68	5.99E+06	1.12E-05	1.87E-12	2 00E-04	9.80E-11	1.60E-04	2 29E-17	8 47E-08	3.15E+07	4.18E-08	
									Fines						
PU241	2 58E+04	11.5%	10%	68	5.99E+06	1.12E-05	1.87E-12	3.00E-05	1.13E-12	1.60E-04	2.19E-19	8.10E-10	3.15E+07	4.62E-12	
Y 90	2 24E+04	11.5%	10%	68	5.99E+06	1.12E-05	1.87E-12	3 00E-05	9.83E-13	1 60E-04	4 44E-16	1 64E-06	3.15E+07	8.14E-09	
PM147	9.63E+03	11 5%	10%	68	5 99E+06	1.12E-05	1 87E-12	3.00E-05	4 22E-13	1 60E-04	2.18E-18	8.07E-09	3 15E+07	1.72E-11	
CE144	2 48E+03	11.5%	10%	68	5 99E+06	1.12E-05	1.87E-12	3 00E-05	1.09E-13	1 60E-04	2.49E-15	9 21E-06	3.15E+07	5 05E-09	
PR144	2.48E+03	11 5%	10%	68	5 99E+06	1.12E-05	1.87E-12	3 00E-05	1 09E-13	1.60E-04	2.99E-15	1.11E-05	3.15E+07	6 07E-09	
EU154	1 74E+03	11.5%	10%	68	5.99E+06	1 12E-05	1 87E-12	3 00E-05	7 63E-14	1 60E-04	9 43E-14	3 49E-04	3.15E+07	1.34E-07	
CM244	2 38E+03	11 5%	10%	68	5 99E+06	1.12E-05	1.87E-12	3 00E-05	1.04E-13	1.60E-04	8 82E-18	3.26E-08	3.15E+07	1.72E-11	
PU238	1 58E+03	11.5%	10%	68	5.99E+06	1.12E-05	1.87E-12	3.00E-05	6 93E-14	1.60E-04	9.30E-18	3.44E-08	3.15E+07	1.20E-11	
SB125	7.91E+02	11.5%	10%	68	5.99E+06	1.12E-05	1.87E-12	3 00E-05	3.47E-14	1.60E-04	3.53E-14	1.31E-04	3.15E+07	2.28E-08	
EU155	5 41E+02	11 5%	10%	68	5 99E+06	1.12E-05	1 87E-12	3.00E-05	2 37E-14	1.60E-04	8.09E-15	2.99E-05	3.15E+07	3 58E-09	
AM241	2 78E+02	11.5%	10%	68	5.99E+06	1.12E-05	1 87E-12	3 00E-05	1.22E-14	1.60E-04	2.87E-15	1 06E-05	3.15E+07	6 53E-10	
TE125M	1.93E+02	11 5%	10%	68	5 99E+06	1 12E-05	1.87E-12	3.00E-05	8.48E-15	1.60E-04	1.22E-15	4.51E-06	3.15E+07	1 93E-10	
PU240	1 50E+02	11.5%	10%	68	5.99E+06	1.12E-05	1 87E-12	3.00E-05	6 58E-15	1.60E-04	9.26E-18	3.43E-08	3.15E+07	1 14E-12	
SM151	9 76E+01	11.5%	10%	68	5 99E+06	1.12E-05	1.87E-12	3 00E-05	4.28E-15	1 60E-04	7.09E-20	2.62E-10	3 15E+07	5.66E-15	
PU239	6.70E+01	11 5%	10%	68	5 99E+06	1.12E-05	1 87E-12	3 00E-05	2 94E-15	1 60E-04	9.47E-18	3.50E-08	3.15E+07	5.19E-13	
BA137M	3.17E+04	11 5%	10%	68	5 99E+06	1.12E-05	1.87E-12	3 00E-05	1 39E-12	1.60E-04	4 63E-14	1.71E-04	3.15E+07	1 20E-06	
RH106	4 71E+03	11.5%	10%	68	5 99E+06	1.12E-05	1 87E-12	3 00E-05	2.07E-13	1 60E-04	1.72E-14	6.36E-05	3 15E+07	6.63E-08	
PR144M	3.48E+01	11 5%	10%	68	5.99E+06	1.12E-05	1.87E-12	3 00E-05	1 53E-15	1 60E-04	8.16E-16	3 02E-06	3.15E+07	2.32E-11	
AM243	1 36E+01	11.5%	10%	68	5 99E+06	1 12E-05	1 87E-12	3.00E-05	5 97E-16	1.60E-04	7 47E-15	2.76E-05	3 15E+07	8.31E-11	
CM242	9 82E+00	11 5%	10%	68	5 99E+06	1.12E-05	1.87E-12	3.00E-05	4.31E-16	1 60E-04	1.06E-17	3.92E-08	3 15E+07	8 51E-14	
CM243	9 79E+00	11 5%	10%	68	5 99E+06	1.12E-05	1.87E-12	3.00E-05	4 29E-16	1.60E-04	1.50E-14	5 55E-05	3.15E+07	1.20E-10	
NP239	1.36E+01	11.5%	10%	68	5 99E+06	1.12E-05	1.87E-12	3 00E-05	5 97E-16	1 60E-04	2 00E-14	7.40E-05	3 15E+07	2 22E-10	
NP237	1.18E-01	11 5%	10%	68	5.99E+06	1.12E-05	1 87E-12	3.00E-05	5.18E-18	1 60E-04	3.20E-15	1.18E-05	3.15E+07	3.09E-13	
PU242	9 04E-01	11 5%	10%	68	5 99E+06	1.12E-05	1 87E-12	3.00E-05	3 97E-17	1.60E-04	7.90E-18	2 92E-08	3.15E+07	5.84E-15	
AM242	2.71E+00	11.5%	10%	68	5.99E+06	1.12E-05	1 87E-12	3 00E-05	1.19E-16	1 60E-04	1 88E-15	6.96E-06	3.15E+07	4.17E-12	
AM242M	2 72E+00	11.5%	10%	68	5 99E+06	1.12E-05	1.87E-12	3 00E-05	1.19E-16	1 60E-04	7.94E-17	2 94E-07	3 15E+07	1.77E-13	
													Total	4 23E-03	

MPC-68															
Off-Normal Conditions															
Effective Dose Equivalent From Submersion															
Nuclide	Inventory (Ci/Assy)	% available for release	% remain airborne	No. Assy	MPC Vol (cm3)	L_{offnor} Rate at Upstream (cm3/s)	Fraction Released per sec	Release Fraction	Release Rate (Ci/sec)	X/Q (sec/m3)	DCF (Sv/Bq)	DCF (mRem/uCi)	Occ Time (sec)	DDE (mRem)	
									Gases						
H 3	1.24E+02	11.5%	100%	68	5 99E+06	1.12E-05	1.87E-12	0 30	5.43E-10	1 60E-04	0 00E+00	0.00E+00	3.15E+07	0 00E+00	
I129	1 12E-02	11.5%	100%	68	5 99E+06	1.12E-05	1 87E-12	0.30	4 91E-14	1.60E-04	3 86E-16	1.43E-06	3.15E+07	3 54E-10	
KR 85	2 04E+03	11 5%	100%	68	5.99E+06	1.12E-05	1.87E-12	0.30	8 95E-09	1.60E-04	1.18E-16	4.37E-07	3.15E+07	1 97E-05	
									Crud						
Co-60	6 50E+01	100 0%	100%	68	5 99E+06	1.12E-05	1 87E-12	0.15	1.24E-09	1.60E-04	1.27E-13	4.70E-04	3 15E+07	2.94E-03	
									Volatiles						
SR 90	2.24E+04	11.5%	100%	68	5 99E+06	1.12E-05	1 87E-12	2 00E-04	6 55E-11	1 60E-04	7.33E-18	2.71E-08	3.15E+07	8 95E-09	
RU106	4 71E+03	11.5%	100%	68	5.99E+06	1.12E-05	1 87E-12	2 00E-04	1.38E-11	1.60E-04	0 00E+00	0 00E+00	3.15E+07	0 00E+00	
CS134	1.18E+04	11.5%	100%	68	5 99E+06	1.12E-05	1 87E-12	2.00E-04	3 45E-11	1.60E-04	7.57E-14	2 80E-04	3.15E+07	4 87E-05	
CS137	3 35E+04	11.5%	100%	68	5 99E+06	1.12E-05	1.87E-12	2.00E-04	9.80E-11	1.60E-04	7.55E-18	2.79E-08	3.15E+07	1.38E-08	
									Fines						
PU241	2 58E+04	11 5%	10%	68	5.99E+06	1.12E-05	1.87E-12	3 00E-05	1.13E-12	1.60E-04	6 98E-20	2 58E-10	3.15E+07	1.47E-12	
Y 90	2 24E+04	11 5%	10%	68	5.99E+06	1.12E-05	1.87E-12	3 00E-05	9 83E-13	1 60E-04	1.87E-16	6 92E-07	3.15E+07	3.43E-09	
PM147	9 63E+03	11 5%	10%	68	5.99E+06	1.12E-05	1 87E-12	3 00E-05	4 22E-13	1.60E-04	6 75E-19	2.50E-09	3.15E+07	5 32E-12	
CE144	2.48E+03	11.5%	10%	68	5 99E+06	1.12E-05	1 87E-12	3 00E-05	1 09E-13	1 60E-04	8.33E-16	3 08E-06	3.15E+07	1.69E-09	
PR144	2 48E+03	11 5%	10%	68	5.99E+06	1.12E-05	1.87E-12	3.00E-05	1.09E-13	1.60E-04	1.95E-15	7.22E-06	3 15E+07	3 96E-09	
EU154	1.74E+03	11.5%	10%	68	5 99E+06	1.12E-05	1 87E-12	3 00E-05	7 63E-14	1.60E-04	6.15E-14	2.28E-04	3.15E+07	8.75E-08	
CM244	2 38E+03	11.5%	10%	68	5 99E+06	1.12E-05	1 87E-12	3 00E-05	1.04E-13	1.60E-04	4 19E-18	1.55E-08	3.15E+07	8.16E-12	
PU238	1.58E+03	11.5%	10%	68	5 99E+06	1.12E-05	1 87E-12	3 00E-05	6 93E-14	1 60E-04	4.01E-18	1.48E-08	3.15E+07	5.18E-12	
SB125	7.91E+02	11.5%	10%	68	5 99E+06	1.12E-05	1.87E-12	3 00E-05	3 47E-14	1.60E-04	2.01E-14	7.44E-05	3.15E+07	1.30E-08	
EU155	5 41E+02	11.5%	10%	68	5.99E+06	1.12E-05	1.87E-12	3.00E-05	2.37E-14	1.60E-04	2.41E-15	8.92E-06	3.15E+07	1 07E-09	
AM241	2.78E+02	11.5%	10%	68	5 99E+06	1.12E-05	1 87E-12	3 00E-05	1.22E-14	1.60E-04	7.83E-16	2.90E-06	3.15E+07	1.78E-10	
TE125M	1 93E+02	11 5%	10%	68	5.99E+06	1.12E-05	1.87E-12	3 00E-05	8 48E-15	1 60E-04	4 64E-16	1 72E-06	3.15E+07	7.34E-11	
PU240	1 50E+02	11.5%	10%	68	5.99E+06	1.12E-05	1.87E-12	3.00E-05	6.58E-15	1.60E-04	3.92E-18	1.45E-08	3.15E+07	4.81E-13	
SM151	9 76E+01	11 5%	10%	68	5 99E+06	1.12E-05	1 87E-12	3.00E-05	4 28E-15	1.60E-04	3 58E-20	1 32E-10	3.15E+07	2.86E-15	
PU239	6 70E+01	11 5%	10%	68	5 99E+06	1.12E-05	1.87E-12	3.00E-05	2.94E-15	1.60E-04	3.88E-18	1.44E-08	3.15E+07	2.13E-13	
BA137M	3.17E+04	11.5%	10%	68	5.99E+06	1.12E-05	1.87E-12	3 00E-05	1.39E-12	1.60E-04	2.88E-14	1.07E-04	3.15E+07	7.47E-07	
RH106	4.71E+03	11.5%	10%	68	5 99E+06	1.12E-05	1 87E-12	3 00E-05	2 07E-13	1.60E-04	1.03E-14	3.81E-05	3.15E+07	3.97E-08	
PR144M	3.48E+01	11.5%	10%	68	5.99E+06	1.12E-05	1 87E-12	3 00E-05	1.53E-15	1 60E-04	2.81E-16	1.04E-06	3.15E+07	8.00E-12	
AM243	1 36E+01	11 5%	10%	68	5 99E+06	1.12E-05	1.87E-12	3.00E-05	5.97E-16	1.60E-04	2.09E-15	7.73E-06	3.15E+07	2.33E-11	
CM242	9 82E+00	11.5%	10%	68	5 99E+06	1.12E-05	1 87E-12	3 00E-05	4 31E-16	1.60E-04	4.91E-18	1.82E-08	3.15E+07	3.94E-14	
CM243	9.79E+00	11.5%	10%	68	5.99E+06	1.12E-05	1.87E-12	3.00E-05	4.29E-16	1.60E-04	5 76E-15	2.13E-05	3.15E+07	4.61E-11	
NP239	1 36E+01	11 5%	10%	68	5 99E+06	1.12E-05	1 87E-12	3.00E-05	5 97E-16	1 60E-04	7.52E-15	2.78E-05	3.15E+07	8.37E-11	
NP237	1 18E-01	11 5%	10%	68	5.99E+06	1.12E-05	1.87E-12	3.00E-05	5.18E-18	1.60E-04	9 94E-16	3.68E-06	3.15E+07	9 59E-14	
PU242	9 04E-01	11 5%	10%	68	5 99E+06	1.12E-05	1.87E-12	3 00E-05	3.97E-17	1 60E-04	3.32E-18	1.23E-08	3.15E+07	2.46E-15	
AM242	2.71E+00	11 5%	10%	68	5.99E+06	1.12E-05	1.87E-12	3 00E-05	1.19E-16	1 60E-04	5 94E-16	2 20E-06	3.15E+07	1.32E-12	
AM242M	2 72E+00	11 5%	10%	68	5 99E+06	1.12E-05	1.87E-12	3 00E-05	1.19E-16	1.60E-04	2 95E-17	1 09E-07	3.15E+07	6 56E-14	
													Total	3.01E-03	

MPC-68															
Off-Normal Conditions															
Effective Dose Equivalent From Submersion															
Nuclide	Inventory (Ci/Assy)	% available for release	% remain airborne	No. Assy	MPC Vol (cm3)	L_{offnor} Rate at Upstream (cm3/s)	Fraction Released per sec	Release Fraction	Release Rate (Ci/sec)	X/Q (sec/m3)	DCF (Sv/Bq)	DCF (mRem/uCi)	Occ Time (sec)	DDE (mRem)	
									Gases						
H 3	1 24E+02	11.5%	100%	68	5 99E+06	1 12E-05	1 87E-12	0 30	5 43E-10	1.60E-04	3 31E-19	1.22E-09	3.15E+07	3 35E-09	
I129	1.12E-02	11.5%	100%	68	5 99E+06	1.12E-05	1 87E-12	0.30	4 91E-14	1.60E-04	3 80E-16	1 41E-06	3.15E+07	3 48E-10	
KR 85	2 04E+03	11 5%	100%	68	5 99E+06	1.12E-05	1.87E-12	0 30	8.95E-09	1.60E-04	1.19E-16	4.40E-07	3.15E+07	1 99E-05	
									Crud						
Co-60	6 50E+01	100 0%	100%	68	5.99E+06	1 12E-05	1.87E-12	0.15	1 24E-09	1.60E-04	1 26E-13	4 66E-04	3.15E+07	2.91E-03	
									Volatiles						
SR 90	2 24E+04	11.5%	100%	68	5 99E+06	1.12E-05	1 87E-12	2 00E-04	6.55E-11	1.60E-04	7.53E-18	2.79E-08	3 15E+07	9 20E-09	
RU106	4 71E+03	11.5%	100%	68	5 99E+06	1.12E-05	1 87E-12	2.00E-04	1 38E-11	1 60E-04	0.00E+00	0 00E+00	3.15E+07	0.00E+00	
CS134	1.18E+04	11 5%	100%	68	5.99E+06	1.12E-05	1 87E-12	2 00E-04	3.45E-11	1.60E-04	7.57E-14	2 80E-04	3 15E+07	4 87E-05	
CS137	3 35E+04	11.5%	100%	68	5 99E+06	1.12E-05	1.87E-12	2 00E-04	9.80E-11	1 60E-04	7.74E-18	2 86E-08	3.15E+07	1 41E-08	
									Fines						
PU241	2 58E+04	11 5%	10%	68	5 99E+06	1.12E-05	1.87E-12	3 00E-05	1.13E-12	1 60E-04	7 25E-20	2 68E-10	3 15E+07	1.53E-12	
Y 90	2 24E+04	11.5%	10%	68	5 99E+06	1.12E-05	1 87E-12	3.00E-05	9 83E-13	1.60E-04	1.90E-16	7.03E-07	3.15E+07	3.48E-09	
PM147	9 63E+03	11.5%	10%	68	5.99E+06	1.12E-05	1 87E-12	3 00E-05	4.22E-13	1 60E-04	6 93E-19	2 56E-09	3.15E+07	5.46E-12	
CE144	2 48E+03	11 5%	10%	68	5 99E+06	1 12E-05	1.87E-12	3 00E-05	1.09E-13	1 60E-04	8 53E-16	3.16E-06	3.15E+07	1.73E-09	
PR144	2 48E+03	11.5%	10%	68	5.99E+06	1 12E-05	1 87E-12	3 00E-05	1 09E-13	1.60E-04	1.95E-15	7.22E-06	3.15E+07	3.96E-09	
EU154	1 74E+03	11 5%	10%	68	5.99E+06	1.12E-05	1 87E-12	3 00E-05	7 63E-14	1.60E-04	6.14E-14	2 27E-04	3.15E+07	8 74E-08	
CM244	2 38E+03	11 5%	10%	68	5 99E+06	1.12E-05	1.87E-12	3.00E-05	1.04E-13	1 60E-04	4.91E-18	1.82E-08	3.15E+07	9.56E-12	
PU238	1.58E+03	11.5%	10%	68	5 99E+06	1 12E-05	1.87E-12	3 00E-05	6.93E-14	1 60E-04	4.88E-18	1 81E-08	3 15E+07	6.31E-12	
SB125	7.91E+02	11.5%	10%	68	5 99E+06	1.12E-05	1 87E-12	3.00E-05	3.47E-14	1 60E-04	2 02E-14	7.47E-05	3 15E+07	1.31E-08	
EU155	5 41E+02	11.5%	10%	68	5.99E+06	1.12E-05	1 87E-12	3.00E-05	2.37E-14	1 60E-04	2.49E-15	9 21E-06	3.15E+07	1.10E-09	
AM241	2 78E+02	11 5%	10%	68	5.99E+06	1.12E-05	1 87E-12	3.00E-05	1 22E-14	1 60E-04	8.18E-16	3 03E-06	3.15E+07	1 86E-10	
TE125M	1 93E+02	11.5%	10%	68	5 99E+06	1.12E-05	1 87E-12	3 00E-05	8 48E-15	1.60E-04	4 53E-16	1 68E-06	3 15E+07	7.17E-11	
PU240	1.50E+02	11 5%	10%	68	5 99E+06	1.12E-05	1 87E-12	3.00E-05	6 58E-15	1.60E-04	4.75E-18	1.76E-08	3.15E+07	5.83E-13	
SM151	9 76E+01	11 5%	10%	68	5 99E+06	1.12E-05	1 87E-12	3 00E-05	4 28E-15	1.60E-04	3 61E-20	1 34E-10	3.15E+07	2 88E-15	
PU239	6 70E+01	11 5%	10%	68	5 99E+06	1.12E-05	1 87E-12	3 00E-05	2.94E-15	1.60E-04	4 24E-18	1.57E-08	3.15E+07	2 32E-13	
BA137M	3 17E+04	11.5%	10%	68	5 99E+06	1.12E-05	1 87E-12	3 00E-05	1.39E-12	1 60E-04	2.88E-14	1.07E-04	3 15E+07	7.47E-07	
RH106	4 71E+03	11 5%	10%	68	5.99E+06	1.12E-05	1.87E-12	3 00E-05	2.07E-13	1 60E-04	1.04E-14	3 85E-05	3 15E+07	4.01E-08	
PR144M	3 48E+01	11 5%	10%	68	5 99E+06	1.12E-05	1.87E-12	3.00E-05	1 53E-15	1 60E-04	2 79E-16	1 03E-06	3.15E+07	7.94E-12	
AM243	1 36E+01	11.5%	10%	68	5 99E+06	1.12E-05	1 87E-12	3 00E-05	5 97E-16	1 60E-04	2.18E-15	8 07E-06	3.15E+07	2 43E-11	
CM242	9 82E+00	11 5%	10%	68	5 99E+06	1.12E-05	1 87E-12	3 00E-05	4.31E-16	1 60E-04	5 69E-18	2.11E-08	3 15E+07	4 57E-14	
CM243	9.79E+00	11.5%	10%	68	5.99E+06	1.12E-05	1 87E-12	3 00E-05	4 29E-16	1.60E-04	5 88E-15	2.18E-05	3.15E+07	4.71E-11	
NP239	1.36E+01	11 5%	10%	68	5 99E+06	1.12E-05	1 87E-12	3 00E-05	5 97E-16	1.60E-04	7 69E-15	2.85E-05	3.15E+07	8 55E-11	
NP237	1.18E-01	11.5%	10%	68	5 99E+06	1.12E-05	1 87E-12	3.00E-05	5.18E-18	1.60E-04	1 03E-15	3 81E-06	3.15E+07	9.94E-14	
PU242	9.04E-01	11 5%	10%	68	5.99E+06	1.12E-05	1 87E-12	3.00E-05	3 97E-17	1 60E-04	4 01E-18	1.48E-08	3.15E+07	2.97E-15	
AM242	2.71E+00	11 5%	10%	68	5 99E+06	1.12E-05	1 87E-12	3 00E-05	1.19E-16	1.60E-04	6.15E-16	2.28E-06	3.15E+07	1 36E-12	
AM242M	2 72E+00	11 5%	10%	68	5 99E+06	1.12E-05	1.87E-12	3 00E-05	1.19E-16	1.60E-04	3 17E-17	1.17E-07	3.15E+07	7 05E-14	
													Total	2 98E-03	

MPC-68															
Off-Normal Conditions															
Effective Dose Equivalent From Submersion															
Nuclide	Inventory (Ci/Assy)	% available for release	% remain airborne	No. Assy	MPC Vol (cm3)	L_{offnor} Rate at Upstream (cm3/s)	Fraction Released per sec	Release Fraction	Release Rate (Ci/sec)	X/Q (sec/m3)	DCF (Sv/Bq)	DCF (mRem/uCi)	Occ Time (sec)	SDE (mRem)	
									Gases						
H 3	1 24E+02	11 5%	100%	68	5.99E+06	1.12E-05	1.87E-12	0.30	5 43E-10	1 60E-04	0 00E+00	0.00E+00	3.15E+07	0 00E+00	
I129	1.12E-02	11.5%	100%	68	5.99E+06	1.12E-05	1.87E-12	0.30	4.91E-14	1.60E-04	1.10E-15	4 07E-06	3.15E+07	1 01E-09	
KR 85	2 04E+03	11.5%	100%	68	5 99E+06	1.12E-05	1.87E-12	0 30	8 95E-09	1 60E-04	1.32E-14	4 88E-05	3.15E+07	2.20E-03	
									Crud						
Co-60	6.50E+01	100 0%	100%	68	5 99E+06	1.12E-05	1 87E-12	0 15	1.24E-09	1.60E-04	1 45E-13	5 37E-04	3.15E+07	3.35E-03	
									Volatiles						
SR 90	2.24E+04	11.5%	100%	68	5.99E+06	1.12E-05	1.87E-12	2.00E-04	6.55E-11	1.60E-04	9.20E-15	3.40E-05	3.15E+07	1.12E-05	
RU106	4 71E+03	11 5%	100%	68	5.99E+06	1.12E-05	1 87E-12	2.00E-04	1.38E-11	1.60E-04	0 00E+00	0.00E+00	3.15E+07	0.00E+00	
CS134	1.18E+04	11 5%	100%	68	5 99E+06	1.12E-05	1.87E-12	2 00E-04	3 45E-11	1.60E-04	9 45E-14	3.50E-04	3.15E+07	6 08E-05	
CS137	3 35E+04	11.5%	100%	68	5.99E+06	1.12E-05	1.87E-12	2.00E-04	9 80E-11	1.60E-04	8.63E-15	3.19E-05	3.15E+07	1.58E-05	
									Fines						
PU241	2 58E+04	11.5%	10%	68	5.99E+06	1.12E-05	1.87E-12	3.00E-05	1.13E-12	1.60E-04	1.17E-19	4.33E-10	3.15E+07	2.47E-12	
Y 90	2.24E+04	11 5%	10%	68	5.99E+06	1.12E-05	1 87E-12	3 00E-05	9 83E-13	1.60E-04	6 24E-14	2.31E-04	3.15E+07	1.14E-06	
PM147	9 63E+03	11 5%	10%	68	5.99E+06	1.12E-05	1.87E-12	3.00E-05	4.22E-13	1.60E-04	8.11E-16	3 00E-06	3.15E+07	6.39E-09	
CE144	2 48E+03	11.5%	10%	68	5 99E+06	1.12E-05	1 87E-12	3.00E-05	1 09E-13	1 60E-04	2 93E-15	1.08E-05	3.15E+07	5 94E-09	
PR144	2 48E+03	11.5%	10%	68	5.99E+06	1.12E-05	1.87E-12	3.00E-05	1.09E-13	1.60E-04	8.43E-14	3.12E-04	3 15E+07	1.71E-07	
EU154	1.74E+03	11.5%	10%	68	5 99E+06	1.12E-05	1 87E-12	3 00E-05	7 63E-14	1.60E-04	8.29E-14	3 07E-04	3.15E+07	1.18E-07	
CM244	2.38E+03	11.5%	10%	68	5.99E+06	1.12E-05	1.87E-12	3 00E-05	1 04E-13	1 60E-04	3.91E-17	1 45E-07	3.15E+07	7.61E-11	
PU238	1.58E+03	11 5%	10%	68	5 99E+06	1.12E-05	1.87E-12	3 00E-05	6.93E-14	1.60E-04	4.09E-17	1.51E-07	3.15E+07	5.29E-11	
SB125	7.91E+02	11.5%	10%	68	5 99E+06	1.12E-05	1 87E-12	3 00E-05	3.47E-14	1 60E-04	2.65E-14	9.81E-05	3.15E+07	1.71E-08	
EU155	5 41E+02	11 5%	10%	68	5.99E+06	1.12E-05	1.87E-12	3.00E-05	2.37E-14	1.60E-04	3.39E-15	1.25E-05	3.15E+07	1.50E-09	
AM241	2.78E+02	11 5%	10%	68	5.99E+06	1.12E-05	1.87E-12	3.00E-05	1.22E-14	1.60E-04	1.28E-15	4.74E-06	3.15E+07	2.91E-10	
TE125M	1.93E+02	11 5%	10%	68	5 99E+06	1.12E-05	1.87E-12	3.00E-05	8.48E-15	1.60E-04	1.94E-15	7.18E-06	3.15E+07	3 07E-10	
PU240	1.50E+02	11.5%	10%	68	5.99E+06	1.12E-05	1.87E-12	3.00E-05	6 58E-15	1 60E-04	3 92E-17	1.45E-07	3.15E+07	4.81E-12	
SM151	9 76E+01	11.5%	10%	68	5.99E+06	1.12E-05	1.87E-12	3 00E-05	4.28E-15	1.60E-04	1.90E-19	7.03E-10	3.15E+07	1.52E-14	
PU239	6.70E+01	11.5%	10%	68	5 99E+06	1.12E-05	1 87E-12	3.00E-05	2.94E-15	1.60E-04	1.86E-17	6.88E-08	3.15E+07	1.02E-12	
BA137M	3 17E+04	11.5%	10%	68	5.99E+06	1.12E-05	1.87E-12	3 00E-05	1.39E-12	1 60E-04	3.73E-14	1.38E-04	3.15E+07	9 67E-07	
RH106	4.71E+03	11.5%	10%	68	5 99E+06	1.12E-05	1 87E-12	3.00E-05	2.07E-13	1.60E-04	1.09E-13	4 03E-04	3 15E+07	4.20E-07	
PR144M	3 48E+01	11 5%	10%	68	5 99E+06	1.12E-05	1 87E-12	3 00E-05	1.53E-15	1.60E-04	5.08E-16	1 88E-06	3.15E+07	1.45E-11	
AM243	1 36E+01	11.5%	10%	68	5.99E+06	1.12E-05	1.87E-12	3 00E-05	5.97E-16	1.60E-04	2.75E-15	1.02E-05	3.15E+07	3 06E-11	
CM242	9 82E+00	11.5%	10%	68	5 99E+06	1.12E-05	1.87E-12	3.00E-05	4.31E-16	1.60E-04	4.29E-17	1.59E-07	3.15E+07	3.45E-13	
CM243	9.79E+00	11.5%	10%	68	5.99E+06	1.12E-05	1.87E-12	3.00E-05	4.29E-16	1.60E-04	9.79E-15	3.62E-05	3.15E+07	7.84E-11	
NP239	1.36E+01	11.5%	10%	68	5 99E+06	1.12E-05	1.87E-12	3.00E-05	5.97E-16	1.60E-04	1.60E-14	5.92E-05	3.15E+07	1.78E-10	
NP237	1.18E-01	11 5%	10%	68	5.99E+06	1.12E-05	1 87E-12	3.00E-05	5.18E-18	1 60E-04	1.54E-15	5.70E-06	3.15E+07	1.49E-13	
PU242	9.04E-01	11 5%	10%	68	5 99E+06	1.12E-05	1.87E-12	3 00E-05	3.97E-17	1.60E-04	3.27E-17	1.21E-07	3.15E+07	2.42E-14	
AM242	2.71E+00	11 5%	10%	68	5 99E+06	1.12E-05	1 87E-12	3.00E-05	1.19E-16	1.60E-04	8.20E-15	3.03E-05	3.15E+07	1.82E-11	
AM242M	2 72E+00	11 5%	10%	68	5.99E+06	1.12E-05	1 87E-12	3 00E-05	1.19E-16	1 60E-04	1 36E-16	5 03E-07	3.15E+07	3 03E-13	
													Total	5 65E-03	

MPC-68														
Accident Conditions														
Effective Dose Equivalent From Submersion														
Nuclide	Inventory (Ci/Assy)	% remain airborne	No. Assy	MPC Vol (cm3)	L_{acc} Rate at Upstream (cm3/s)	Fraction Released per sec	Release Fraction	Release Rate (Ci/sec)	X/Q (sec/m3)	DCF (Sv/Bq)	DCF (mRem/uCi)	Occ Time (sec)	DDE (mRem)	
								Gases						
H 3	1 24E+02	100%	68	5 99E+06	1.95E-05	3 26E-12	0.30	8 23E-09	8 00E-03	0.00E+00	0.00E+00	2.59E+06	0.00E+00	
I129	1.12E-02	100%	68	5 99E+06	1.95E-05	3 26E-12	0.30	7 45E-13	8 00E-03	4.83E-16	1.79E-06	2.59E+06	2.76E-08	
KR 85	2 04E+03	100%	68	5.99E+06	1 95E-05	3 26E-12	0 30	1.36E-07	8 00E-03	1.17E-16	4 33E-07	2.59E+06	1 22E-03	
								Crud						
Co-60	6 50E+01	100%	68	5.99E+06	1 95E-05	3 26E-12	1 00	1 44E-08	8 00E-03	1.23E-13	4 55E-04	2 59E+06	1.36E-01	
								Volatiles						
SR 90	2 24E+04	100%	68	5.99E+06	1 95E-05	3 26E-12	2 00E-04	9 93E-10	8.00E-03	7 78E-18	2 88E-08	2.59E+06	5 92E-07	
RU106	4 71E+03	100%	68	5 99E+06	1.95E-05	3 26E-12	2 00E-04	2.09E-10	8 00E-03	0.00E+00	0 00E+00	2.59E+06	0 00E+00	
CS134	1.18E+04	100%	68	5.99E+06	1 95E-05	3 26E-12	2 00E-04	5.23E-10	8.00E-03	7 40E-14	2.74E-04	2 59E+06	2.97E-03	
CS137	3 35E+04	100%	68	5 99E+06	1.95E-05	3 26E-12	2.00E-04	1.49E-09	8 00E-03	7.96E-18	2 95E-08	2 59E+06	9 06E-07	
								Fines						
PU241	2 58E+04	10%	68	5 99E+06	1.95E-05	3 26E-12	3 00E-05	1.72E-11	8 00E-03	7.19E-20	2.66E-10	2.59E+06	9.46E-11	
Y 90	2 24E+04	10%	68	5 99E+06	1.95E-05	3 26E-12	3 00E-05	1.49E-11	8 00E-03	1 89E-16	6 99E-07	2.59E+06	2.16E-07	
PM147	9.63E+03	10%	68	5.99E+06	1.95E-05	3 26E-12	3.00E-05	6 41E-12	8 00E-03	7.48E-19	2.77E-09	2.59E+06	3.67E-10	
CE144	2 48E+03	10%	68	5 99E+06	1.95E-05	3 26E-12	3.00E-05	1.65E-12	8 00E-03	8 53E-16	3.16E-06	2.59E+06	1.08E-07	
PR144	2.48E+03	10%	68	5.99E+06	1 95E-05	3 26E-12	3.00E-05	1.65E-12	8 00E-03	1.90E-15	7 03E-06	2 59E+06	2.40E-07	
EU154	1 74E+03	10%	68	5 99E+06	1 95E-05	3 26E-12	3 00E-05	1.16E-12	8 00E-03	6.00E-14	2 22E-04	2.59E+06	5.32E-06	
CM244	2 38E+03	10%	68	5 99E+06	1.95E-05	3 26E-12	3.00E-05	1 58E-12	8.00E-03	6 90E-18	2 55E-08	2.59E+06	8.37E-10	
PU238	1 58E+03	10%	68	5 99E+06	1 95E-05	3 26E-12	3.00E-05	1.05E-12	8.00E-03	6 56E-18	2.43E-08	2.59E+06	5 29E-10	
SB125	7.91E+02	10%	68	5 99E+06	1 95E-05	3.26E-12	3 00E-05	5.26E-13	8 00E-03	1.98E-14	7 33E-05	2 59E+06	7.99E-07	
EU155	5 41E+02	10%	68	5 99E+06	1.95E-05	3 26E-12	3 00E-05	3.60E-13	8 00E-03	2 49E-15	9.21E-06	2.59E+06	6 87E-08	
AM241	2 78E+02	10%	68	5 99E+06	1 95E-05	3 26E-12	3.00E-05	1 85E-13	8 00E-03	8 58E-16	3.17E-06	2.59E+06	1 22E-08	
TE125M	1 93E+02	10%	68	5 99E+06	1 95E-05	3.26E-12	3 00E-05	1.29E-13	8 00E-03	5.96E-16	2.21E-06	2 59E+06	5 88E-09	
PU240	1.50E+02	10%	68	5 99E+06	1.95E-05	3 26E-12	3 00E-05	9.98E-14	8.00E-03	6 36E-18	2.35E-08	2.59E+06	4.86E-11	
SM151	9 76E+01	10%	68	5.99E+06	1.95E-05	3.26E-12	3.00E-05	6.49E-14	8.00E-03	5.20E-20	1.92E-10	2.59E+06	2.59E-13	
PU239	6 70E+01	10%	68	5 99E+06	1.95E-05	3 26E-12	3.00E-05	4.46E-14	8 00E-03	4 84E-18	1.79E-08	2.59E+06	1.65E-11	
BA137M	3 17E+04	10%	68	5.99E+06	1.95E-05	3 26E-12	3.00E-05	2.11E-11	8 00E-03	2.82E-14	1.04E-04	2.59E+06	4.56E-05	
RH106	4.71E+03	10%	68	5 99E+06	1.95E-05	3 26E-12	3 00E-05	3.13E-12	8.00E-03	1 01E-14	3 74E-05	2.59E+06	2.43E-06	
PR144M	3 48E+01	10%	68	5 99E+06	1 95E-05	3 26E-12	3.00E-05	2.31E-14	8 00E-03	3 25E-16	1.20E-06	2.59E+06	5 77E-10	
AM243	1 36E+01	10%	68	5.99E+06	1.95E-05	3 26E-12	3.00E-05	9 05E-15	8.00E-03	2.19E-15	8 10E-06	2 59E+06	1.52E-09	
CM242	9 82E+00	10%	68	5 99E+06	1 95E-05	3 26E-12	3.00E-05	6.53E-15	8 00E-03	7 83E-18	2.90E-08	2.59E+06	3.92E-12	
CM243	9 79E+00	10%	68	5.99E+06	1.95E-05	3.26E-12	3 00E-05	6 51E-15	8 00E-03	5.77E-15	2.13E-05	2 59E+06	2 88E-09	
NP239	1.36E+01	10%	68	5 99E+06	1 95E-05	3 26E-12	3.00E-05	9 05E-15	8.00E-03	7 53E-15	2.79E-05	2.59E+06	5.22E-09	
NP237	1.18E-01	10%	68	5.99E+06	1.95E-05	3 26E-12	3 00E-05	7.85E-17	8.00E-03	1.04E-15	3.85E-06	2.59E+06	6.26E-12	
PU242	9 04E-01	10%	68	5 99E+06	1.95E-05	3 26E-12	3 00E-05	6 01E-16	8 00E-03	5.34E-18	1.98E-08	2.59E+06	2.46E-13	
AM242	2.71E+00	10%	68	5.99E+06	1.95E-05	3 26E-12	3.00E-05	1.80E-15	8 00E-03	6 09E-16	2 25E-06	2.59E+06	8.42E-11	
AM242M	2 72E+00	10%	68	5.99E+06	1.95E-05	3 26E-12	3.00E-05	1 81E-15	8.00E-03	3 80E-17	1.41E-07	2.59E+06	5.27E-12	
												Total	1 40E-01	

MPC-68														
Accident Conditions														
Effective Dose Equivalent From Submersion														
Nuclide	Inventory (Ci/Assy)	% remain airborne	No. Assy	MPC Vol (cm3)	L_{ace} Rate at Upstream (cm3/s)	Fraction Released per sec	Release Fraction	Release Rate (Ci/sec)	X/Q (sec/m3)	DCF (Sv/Bq)	DCF (mRem/uCi)	Occ Time (sec)	DDE (mRem)	
								Gases						
H 3	1.24E+02	100%	68	5.99E+06	1.95E-05	3.26E-12	0 30	8 23E-09	8 00E-03	0 00E+00	0.00E+00	2 59E+06	0.00E+00	
I129	1.12E-02	100%	68	5.99E+06	1.95E-05	3 26E-12	0.30	7.45E-13	8 00E-03	6 66E-16	2.46E-06	2 59E+06	3 80E-08	
KR 85	2.04E+03	100%	68	5.99E+06	1.95E-05	3 26E-12	0.30	1.36E-07	8 00E-03	1.34E-16	4 96E-07	2.59E+06	1.39E-03	
								Crud						
Co-60	6 50E+01	100%	68	5.99E+06	1.95E-05	3.26E-12	1.00	1.44E-08	8 00E-03	1.39E-13	5.14E-04	2.59E+06	1 54E-01	
								Volatiles						
SR 90	2 24E+04	100%	68	5 99E+06	1 95E-05	3 26E-12	2.00E-04	9.93E-10	8 00E-03	9.49E-18	3.51E-08	2 59E+06	7.23E-07	
RU106	4.71E+03	100%	68	5 99E+06	1.95E-05	3.26E-12	2.00E-04	2.09E-10	8.00E-03	0 00E+00	0.00E+00	2.59E+06	0.00E+00	
CS134	1.18E+04	100%	68	5.99E+06	1.95E-05	3.26E-12	2 00E-04	5 23E-10	8.00E-03	8.43E-14	3.12E-04	2 59E+06	3 38E-03	
CS137	3 35E+04	100%	68	5 99E+06	1.95E-05	3.26E-12	2.00E-04	1 49E-09	8 00E-03	9 67E-18	3.58E-08	2.59E+06	1.10E-06	
								Fines						
PU241	2 58E+04	10%	68	5 99E+06	1 95E-05	3 26E-12	3 00E-05	1.72E-11	8.00E-03	8.67E-20	3 21E-10	2 59E+06	1.14E-10	
Y 90	2 24E+04	10%	68	5 99E+06	1.95E-05	3 26E-12	3 00E-05	1.49E-11	8.00E-03	2.20E-16	8.14E-07	2.59E+06	2.51E-07	
PM147	9 63E+03	10%	68	5 99E+06	1.95E-05	3 26E-12	3 00E-05	6.41E-12	8.00E-03	9.56E-19	3 54E-09	2.59E+06	4.69E-10	
CE144	2.48E+03	10%	68	5 99E+06	1.95E-05	3 26E-12	3 00E-05	1 65E-12	8 00E-03	1.01E-15	3.74E-06	2 59E+06	1.28E-07	
PR144	2.48E+03	10%	68	5 99E+06	1.95E-05	3 26E-12	3 00E-05	1.65E-12	8 00E-03	2.15E-15	7.96E-06	2 59E+06	2.72E-07	
EU154	1.74E+03	10%	68	5.99E+06	1.95E-05	3 26E-12	3 00E-05	1.16E-12	8 00E-03	6 81E-14	2.52E-04	2 59E+06	6 04E-06	
CM244	2 38E+03	10%	68	5 99E+06	1.95E-05	3 26E-12	3 00E-05	1.58E-12	8.00E-03	1.33E-17	4 92E-08	2.59E+06	1 61E-09	
PU238	1.58E+03	10%	68	5 99E+06	1 95E-05	3 26E-12	3 00E-05	1 05E-12	8 00E-03	1.27E-17	4.70E-08	2 59E+06	1.02E-09	
SB125	7 91E+02	10%	68	5.99E+06	1.95E-05	3 26E-12	3 00E-05	5 26E-13	8 00E-03	2.27E-14	8.40E-05	2 59E+06	9.16E-07	
EU155	5 41E+02	10%	68	5 99E+06	1.95E-05	3 26E-12	3 00E-05	3 60E-13	8 00E-03	2.95E-15	1.09E-05	2 59E+06	8.14E-08	
AM241	2.78E+02	10%	68	5.99E+06	1.95E-05	3 26E-12	3 00E-05	1.85E-13	8 00E-03	1 07E-15	3.96E-06	2 59E+06	1.52E-08	
TE125M	1.93E+02	10%	68	5.99E+06	1.95E-05	3.26E-12	3 00E-05	1.29E-13	8 00E-03	8 48E-16	3.14E-06	2.59E+06	8 36E-09	
PU240	1.50E+02	10%	68	5 99E+06	1.95E-05	3.26E-12	3 00E-05	9.98E-14	8 00E-03	1 23E-17	4.55E-08	2 59E+06	9 41E-11	
SM151	9 76E+01	10%	68	5 99E+06	1.95E-05	3.26E-12	3 00E-05	6.49E-14	8.00E-03	8.80E-20	3.26E-10	2.59E+06	4.38E-13	
PU239	6 70E+01	10%	68	5 99E+06	1.95E-05	3 26E-12	3 00E-05	4.46E-14	8.00E-03	7.55E-18	2.79E-08	2.59E+06	2.58E-11	
BA137M	3.17E+04	10%	68	5 99E+06	1.95E-05	3 26E-12	3 00E-05	2.11E-11	8 00E-03	3.22E-14	1.19E-04	2 59E+06	5 20E-05	
RH106	4 71E+03	10%	68	5 99E+06	1.95E-05	3 26E-12	3 00E-05	3.13E-12	8 00E-03	1.16E-14	4.29E-05	2.59E+06	2.79E-06	
PR144M	3 48E+01	10%	68	5 99E+06	1 95E-05	3 26E-12	3 00E-05	2.31E-14	8 00E-03	4.20E-16	1.55E-06	2.59E+06	7.45E-10	
AM243	1.36E+01	10%	68	5 99E+06	1.95E-05	3.26E-12	3.00E-05	9 05E-15	8 00E-03	2 61E-15	9 66E-06	2.59E+06	1 81E-09	
CM242	9 82E+00	10%	68	5 99E+06	1 95E-05	3 26E-12	3 00E-05	6.53E-15	8 00E-03	1.48E-17	5 48E-08	2.59E+06	7.41E-12	
CM243	9.79E+00	10%	68	5.99E+06	1.95E-05	3.26E-12	3 00E-05	6 51E-15	8 00E-03	6 68E-15	2.47E-05	2 59E+06	3 33E-09	
NP239	1 36E+01	10%	68	5 99E+06	1.95E-05	3 26E-12	3 00E-05	9 05E-15	8 00E-03	8.73E-15	3 23E-05	2 59E+06	6 05E-09	
NP237	1.18E-01	10%	68	5 99E+06	1.95E-05	3 26E-12	3 00E-05	7.85E-17	8 00E-03	1.26E-15	4.66E-06	2 59E+06	7 58E-12	
PU242	9.04E-01	10%	68	5 99E+06	1.95E-05	3.26E-12	3.00E-05	6.01E-16	8 00E-03	1.03E-17	3 81E-08	2.59E+06	4.75E-13	
AM242	2.71E+00	10%	68	5 99E+06	1.95E-05	3.26E-12	3 00E-05	1 80E-15	8 00E-03	7.30E-16	2.70E-06	2.59E+06	1 01E-10	
AM242M	2 72E+00	10%	68	5 99E+06	1.95E-05	3 26E-12	3 00E-05	1.81E-15	8.00E-03	6.01E-17	2.22E-07	2.59E+06	8.34E-12	
												Total	1.58E-01	

MPC-68														
Accident Conditions														
Effective Dose Equivalent From Submersion														
Nuclide	Inventory (Ci/Assy)	% remain airborne	No. Assy	MPC Vol (cm3)	L_{acc} Rate at Upstream (cm3/s)	Fraction Released per sec	Release Fraction	Release Rate (Ci/sec)	X/Q (sec/m3)	DCF (Sv/Bq)	DCF (mRem/uCi)	Occ Time (sec)	DDE (mRem)	
								Gases						
H 3	1.24E+02	100%	68	5.99E+06	1.95E-05	3 26E-12	0 30	8 23E-09	8.00E-03	2.75E-18	1.02E-08	2.59E+06	1.73E-06	
I129	1.12E-02	100%	68	5.99E+06	1.95E-05	3 26E-12	0 30	7.45E-13	8.00E-03	2.14E-16	7.92E-07	2.59E+06	1.22E-08	
KR 85	2 04E+03	100%	68	5 99E+06	1.95E-05	3 26E-12	0.30	1 36E-07	8.00E-03	1.14E-16	4 22E-07	2.59E+06	1.19E-03	
								Crud						
Co-60	6.50E+01	100%	68	5.99E+06	1.95E-05	3 26E-12	1.00	1 44E-08	8 00E-03	1.24E-13	4 59E-04	2.59E+06	1.37E-01	
								Volatiles						
SR 90	2 24E+04	100%	68	5.99E+06	1.95E-05	3.26E-12	2.00E-04	9.93E-10	8.00E-03	6.44E-18	2.38E-08	2.59E+06	4.90E-07	
RU106	4.71E+03	100%	68	5.99E+06	1 95E-05	3.26E-12	2.00E-04	2 09E-10	8.00E-03	0 00E+00	0.00E+00	2 59E+06	0.00E+00	
CS134	1.18E+04	100%	68	5 99E+06	1.95E-05	3 26E-12	2 00E-04	5.23E-10	8.00E-03	7 37E-14	2.73E-04	2.59E+06	2 96E-03	
CS137	3 35E+04	100%	68	5.99E+06	1.95E-05	3 26E-12	2.00E-04	1.49E-09	8.00E-03	6 68E-18	2.47E-08	2.59E+06	7.61E-07	
								Fines						
PU241	2.58E+04	10%	68	5.99E+06	1.95E-05	3 26E-12	3.00E-05	1 72E-11	8.00E-03	6 48E-20	2.40E-10	2 59E+06	8.52E-11	
Y 90	2 24E+04	10%	68	5.99E+06	1.95E-05	3 26E-12	3 00E-05	1 49E-11	8 00E-03	1.77E-16	6 55E-07	2.59E+06	2 02E-07	
PM147	9.63E+03	10%	68	5.99E+06	1.95E-05	3 26E-12	3.00E-05	6 41E-12	8.00E-03	5 45E-19	2.02E-09	2 59E+06	2 68E-10	
CE144	2 48E+03	10%	68	5 99E+06	1.95E-05	3 26E-12	3 00E-05	1.65E-12	8 00E-03	7.69E-16	2 85E-06	2.59E+06	9.72E-08	
PR144	2.48E+03	10%	68	5.99E+06	1.95E-05	3 26E-12	3.00E-05	1 65E-12	8 00E-03	1.90E-15	7 03E-06	2.59E+06	2 40E-07	
EU154	1 74E+03	10%	68	5 99E+06	1.95E-05	3 26E-12	3 00E-05	1.16E-12	8.00E-03	5 99E-14	2 22E-04	2 59E+06	5 31E-06	
CM244	2 38E+03	10%	68	5 99E+06	1.95E-05	3 26E-12	3 00E-05	1.58E-12	8 00E-03	7.08E-19	2.62E-09	2.59E+06	8.59E-11	
PU238	1 58E+03	10%	68	5 99E+06	1.95E-05	3.26E-12	3 00E-05	1 05E-12	8 00E-03	1 06E-18	3 92E-09	2.59E+06	8 54E-11	
SB125	7.91E+02	10%	68	5.99E+06	1.95E-05	3 26E-12	3 00E-05	5.26E-13	8 00E-03	1 95E-14	7.22E-05	2.59E+06	7.87E-07	
EU155	5 41E+02	10%	68	5.99E+06	1.95E-05	3 26E-12	3.00E-05	3 60E-13	8 00E-03	2 22E-15	8 21E-06	2.59E+06	6 12E-08	
AM241	2 78E+02	10%	68	5 99E+06	1 95E-05	3 26E-12	3.00E-05	1 85E-13	8 00E-03	6.74E-16	2.49E-06	2.59E+06	9.55E-09	
TE125M	1.93E+02	10%	68	5.99E+06	1.95E-05	3 26E-12	3 00E-05	1 29E-13	8 00E-03	2 23E-16	8.25E-07	2 59E+06	2 20E-09	
PU240	1 50E+02	10%	68	5.99E+06	1.95E-05	3.26E-12	3.00E-05	9 98E-14	8.00E-03	1 09E-18	4.03E-09	2.59E+06	8 34E-12	
SM151	9 76E+01	10%	68	5.99E+06	1.95E-05	3 26E-12	3.00E-05	6 49E-14	8.00E-03	7.08E-21	2.62E-11	2.59E+06	3.52E-14	
PU239	6 70E+01	10%	68	5.99E+06	1 95E-05	3.26E-12	3.00E-05	4 46E-14	8 00E-03	2 65E-18	9 81E-09	2.59E+06	9 05E-12	
BA137M	3.17E+04	10%	68	5.99E+06	1 95E-05	3 26E-12	3.00E-05	2.11E-11	8 00E-03	2 80E-14	1 04E-04	2.59E+06	4.53E-05	
RH106	4.71E+03	10%	68	5.99E+06	1 95E-05	3.26E-12	3 00E-05	3 13E-12	8 00E-03	1 01E-14	3.74E-05	2 59E+06	2 43E-06	
PR144M	3 48E+01	10%	68	5.99E+06	1.95E-05	3 26E-12	3 00E-05	2.31E-14	8 00E-03	2.00E-16	7 40E-07	2.59E+06	3 55E-10	
AM243	1 36E+01	10%	68	5 99E+06	1 95E-05	3 26E-12	3 00E-05	9 05E-15	8 00E-03	1 92E-15	7.10E-06	2.59E+06	1.33E-09	
CM242	9 82E+00	10%	68	5 99E+06	1.95E-05	3.26E-12	3.00E-05	6 53E-15	8 00E-03	1.13E-18	4.18E-09	2 59E+06	5 66E-13	
CM243	9 79E+00	10%	68	5 99E+06	1.95E-05	3 26E-12	3 00E-05	6 51E-15	8.00E-03	5 50E-15	2.04E-05	2.59E+06	2.75E-09	
NP239	1 36E+01	10%	68	5 99E+06	1.95E-05	3 26E-12	3 00E-05	9.05E-15	8.00E-03	7.18E-15	2 66E-05	2 59E+06	4 98E-09	
NP237	1.18E-01	10%	68	5 99E+06	1.95E-05	3.26E-12	3.00E-05	7 85E-17	8 00E-03	9.02E-16	3 34E-06	2.59E+06	5.43E-12	
PU242	9.04E-01	10%	68	5.99E+06	1 95E-05	3 26E-12	3 00E-05	6.01E-16	8.00E-03	9 69E-19	3 59E-09	2 59E+06	4.47E-14	
AM242	2 71E+00	10%	68	5 99E+06	1 95E-05	3.26E-12	3.00E-05	1.80E-15	8 00E-03	5.51E-16	2.04E-06	2.59E+06	7 61E-11	
AM242M	2.72E+00	10%	68	5 99E+06	1 95E-05	3 26E-12	3 00E-05	1 81E-15	8.00E-03	1.72E-17	6 36E-08	2 59E+06	2 39E-12	
												Total	1 41E-01	

MPC-68														
Accident Conditions														
Effective Dose Equivalent From Submersion														
Nuclide	Inventory (Ci/Assy)	% remain airborne	No. Assy	MPC Vol (cm3)	L_{acc} Rate at Upstream (cm3/s)	Fraction Released per sec	Release Fraction	Release Rate (Ci/sec)	X/Q (sec/m3)	DCF (Sv/Bq)	DCF (mRem/uCi)	Occ Time (sec)	DDE (mRem)	
								Gases						
H 3	1 24E+02	100%	68	5 99E+06	1 95E-05	3.26E-12	0 30	8.23E-09	8 00E-03	0 00E+00	0 00E+00	2.59E+06	0 00E+00	
I129	1.12E-02	100%	68	5.99E+06	1.95E-05	3.26E-12	0 30	7.45E-13	8 00E-03	1.64E-16	6 07E-07	2 59E+06	9.37E-09	
KR 85	2 04E+03	100%	68	5 99E+06	1.95E-05	3 26E-12	0 30	1.36E-07	8 00E-03	1 09E-16	4 03E-07	2.59E+06	1.13E-03	
								Crud						
Co-60	6 50E+01	100%	68	5 99E+06	1.95E-05	3 26E-12	1 00	1.44E-08	8 00E-03	1.23E-13	4.55E-04	2.59E+06	1.36E-01	
								Volatiles						
SR 90	2 24E+04	100%	68	5 99E+06	1.95E-05	3 26E-12	2.00E-04	9 93E-10	8 00E-03	5 44E-18	2.01E-08	2.59E+06	4.14E-07	
RU106	4.71E+03	100%	68	5 99E+06	1.95E-05	3 26E-12	2 00E-04	2 09E-10	8 00E-03	0 00E+00	0 00E+00	2.59E+06	0.00E+00	
CS134	1.18E+04	100%	68	5 99E+06	1 95E-05	3.26E-12	2.00E-04	5.23E-10	8.00E-03	7.19E-14	2 66E-04	2.59E+06	2 88E-03	
CS137	3 35E+04	100%	68	5.99E+06	1.95E-05	3 26E-12	2 00E-04	1.49E-09	8 00E-03	5.70E-18	2.11E-08	2.59E+06	6 49E-07	
								Fines						
PU241	2.58E+04	10%	68	5 99E+06	1 95E-05	3 26E-12	3 00E-05	1.72E-11	8 00E-03	5.63E-20	2 08E-10	2.59E+06	7.41E-11	
Y 90	2 24E+04	10%	68	5.99E+06	1.95E-05	3 26E-12	3 00E-05	1.49E-11	8 00E-03	1 62E-16	5.99E-07	2 59E+06	1.85E-07	
PM147	9 63E+03	10%	68	5 99E+06	1.95E-05	3.26E-12	3 00E-05	6.41E-12	8.00E-03	4.46E-19	1.65E-09	2.59E+06	2.19E-10	
CE144	2 48E+03	10%	68	5.99E+06	1.95E-05	3.26E-12	3.00E-05	1.65E-12	8.00E-03	6.68E-16	2.47E-06	2.59E+06	8 45E-08	
PR144	2 48E+03	10%	68	5.99E+06	1.95E-05	3.26E-12	3.00E-05	1.65E-12	8 00E-03	1.87E-15	6.92E-06	2.59E+06	2.36E-07	
EU154	1.74E+03	10%	68	5 99E+06	1 95E-05	3 26E-12	3 00E-05	1.16E-12	8 00E-03	5.87E-14	2.17E-04	2 59E+06	5 21E-06	
CM244	2.38E+03	10%	68	5 99E+06	1.95E-05	3 26E-12	3 00E-05	1.58E-12	8 00E-03	1.46E-18	5 40E-09	2 59E+06	1.77E-10	
PU238	1.58E+03	10%	68	5 99E+06	1.95E-05	3 26E-12	3 00E-05	1 05E-12	8 00E-03	1.68E-18	6.22E-09	2 59E+06	1 35E-10	
SB125	7.91E+02	10%	68	5 99E+06	1 95E-05	3.26E-12	3.00E-05	5 26E-13	8 00E-03	1.87E-14	6.92E-05	2.59E+06	7.54E-07	
EU155	5 41E+02	10%	68	5 99E+06	1.95E-05	3 26E-12	3.00E-05	3 60E-13	8 00E-03	1.85E-15	6.85E-06	2.59E+06	5.10E-08	
AM241	2 78E+02	10%	68	5.99E+06	1.95E-05	3.26E-12	3.00E-05	1.85E-13	8 00E-03	5 21E-16	1.93E-06	2.59E+06	7.39E-09	
TE125M	1 93E+02	10%	68	5.99E+06	1.95E-05	3 26E-12	3 00E-05	1.29E-13	8 00E-03	1 86E-16	6 88E-07	2.59E+06	1.83E-09	
PU240	1.50E+02	10%	68	5 99E+06	1 95E-05	3 26E-12	3 00E-05	9 98E-14	8.00E-03	1.65E-18	6.11E-09	2.59E+06	1.26E-11	
SM151	9 76E+01	10%	68	5.99E+06	1.95E-05	3 26E-12	3.00E-05	6 49E-14	8 00E-03	1.13E-20	4.18E-11	2 59E+06	5.62E-14	
PU239	6 70E+01	10%	68	5 99E+06	1.95E-05	3.26E-12	3 00E-05	4.46E-14	8.00E-03	2.67E-18	9.88E-09	2.59E+06	9 12E-12	
BA137M	3.17E+04	10%	68	5 99E+06	1.95E-05	3.26E-12	3 00E-05	2.11E-11	8 00E-03	2 73E-14	1 01E-04	2.59E+06	4 41E-05	
RH106	4.71E+03	10%	68	5.99E+06	1.95E-05	3.26E-12	3.00E-05	3.13E-12	8 00E-03	9 75E-15	3.61E-05	2.59E+06	2.34E-06	
PR144M	3 48E+01	10%	68	5 99E+06	1.95E-05	3 26E-12	3 00E-05	2.31E-14	8.00E-03	1.56E-16	5.77E-07	2.59E+06	2.77E-10	
AM243	1.36E+01	10%	68	5 99E+06	1.95E-05	3.26E-12	3.00E-05	9.05E-15	8 00E-03	1.55E-15	5.74E-06	2.59E+06	1 07E-09	
CM242	9 82E+00	10%	68	5.99E+06	1.95E-05	3.26E-12	3 00E-05	6.53E-15	8 00E-03	1.89E-18	6.99E-09	2.59E+06	9.46E-13	
CM243	9 79E+00	10%	68	5 99E+06	1.95E-05	3.26E-12	3 00E-05	6.51E-15	8 00E-03	5 00E-15	1.85E-05	2.59E+06	2.50E-09	
NP239	1.36E+01	10%	68	5 99E+06	1.95E-05	3 26E-12	3 00E-05	9 05E-15	8 00E-03	6.50E-15	2.41E-05	2.59E+06	4 51E-09	
NP237	1.18E-01	10%	68	5.99E+06	1.95E-05	3 26E-12	3 00E-05	7.85E-17	8 00E-03	7.69E-16	2 85E-06	2.59E+06	4.63E-12	
PU242	9 04E-01	10%	68	5.99E+06	1 95E-05	3 26E-12	3 00E-05	6 01E-16	8.00E-03	1.43E-18	5 29E-09	2 59E+06	6 59E-14	
AM242	2 71E+00	10%	68	5 99E+06	1.95E-05	3.26E-12	3.00E-05	1.80E-15	8 00E-03	4.77E-16	1.76E-06	2.59E+06	6.59E-11	
AM242M	2.72E+00	10%	68	5.99E+06	1.95E-05	3.26E-12	3 00E-05	1 81E-15	8 00E-03	1.72E-17	6.36E-08	2.59E+06	2 39E-12	
												Total	1.40E-01	

MPC-68														
Accident Conditions														
Effective Dose Equivalent From Submersion														
Nuclide	Inventory (Ci/Assy)	% remain airborne	No Assy	MPC Vol (cm3)	L_{acc} Rate at Upstream (cm3/s)	Fraction Released per sec	Release Fraction	Release Rate (Ci/sec)	X/Q (sec/m3)	DCF (Sv/Bq)	DCF (mRem/uCi)	Occ Time (sec)	DDE (mRem)	
								Gases						
H 3	1 24E+02	100%	68	5 99E+06	1.95E-05	3 26E-12	0.30	8 23E-09	8.00E-03	0.00E+00	0.00E+00	2.59E+06	0.00E+00	
I129	1 12E-02	100%	68	5.99E+06	1.95E-05	3.26E-12	0.30	7.45E-13	8.00E-03	1.10E-15	4.07E-06	2.59E+06	6 28E-08	
KR 85	2 04E+03	100%	68	5 99E+06	1.95E-05	3 26E-12	0 30	1.36E-07	8 00E-03	2.20E-16	8.14E-07	2 59E+06	2.29E-03	
								Crud						
Co-60	6 50E+01	100%	68	5 99E+06	1 95E-05	3.26E-12	1 00	1.44E-08	8.00E-03	1.78E-13	6 59E-04	2 59E+06	1.97E-01	
								Volatiles						
SR 90	2 24E+04	100%	68	5 99E+06	1 95E-05	3 26E-12	2 00E-04	9.93E-10	8 00E-03	2.28E-17	8.44E-08	2.59E+06	1.74E-06	
RU106	4.71E+03	100%	68	5 99E+06	1.95E-05	3 26E-12	2.00E-04	2 09E-10	8.00E-03	0 00E+00	0 00E+00	2.59E+06	0 00E+00	
CS134	1.18E+04	100%	68	5 99E+06	1.95E-05	3.26E-12	2.00E-04	5.23E-10	8.00E-03	1.20E-13	4.44E-04	2.59E+06	4 81E-03	
CS137	3 35E+04	100%	68	5 99E+06	1 95E-05	3 26E-12	2 00E-04	1 49E-09	8.00E-03	2 29E-17	8.47E-08	2.59E+06	2.61E-06	
								Fines						
PU241	2.58E+04	10%	68	5 99E+06	1.95E-05	3 26E-12	3.00E-05	1 72E-11	8 00E-03	2.19E-19	8.10E-10	2.59E+06	2 88E-10	
Y 90	2 24E+04	10%	68	5 99E+06	1.95E-05	3 26E-12	3 00E-05	1.49E-11	8.00E-03	4.44E-16	1 64E-06	2 59E+06	5 07E-07	
PM147	9 63E+03	10%	68	5 99E+06	1.95E-05	3 26E-12	3 00E-05	6 41E-12	8.00E-03	2.18E-18	8.07E-09	2.59E+06	1 07E-09	
CE144	2.48E+03	10%	68	5 99E+06	1.95E-05	3 26E-12	3.00E-05	1 65E-12	8 00E-03	2.49E-15	9 21E-06	2 59E+06	3.15E-07	
PR144	2 48E+03	10%	68	5 99E+06	1.95E-05	3 26E-12	3 00E-05	1.65E-12	8 00E-03	2.99E-15	1.11E-05	2.59E+06	3.78E-07	
EU154	1.74E+03	10%	68	5 99E+06	1 95E-05	3 26E-12	3 00E-05	1.16E-12	8 00E-03	9 43E-14	3.49E-04	2 59E+06	8 37E-06	
CM244	2.38E+03	10%	68	5 99E+06	1.95E-05	3 26E-12	3 00E-05	1 58E-12	8 00E-03	8 82E-18	3 26E-08	2.59E+06	1 07E-09	
PU238	1.58E+03	10%	68	5 99E+06	1 95E-05	3 26E-12	3 00E-05	1 05E-12	8 00E-03	9 30E-18	3.44E-08	2 59E+06	7.49E-10	
SB125	7 91E+02	10%	68	5 99E+06	1 95E-05	3 26E-12	3 00E-05	5 26E-13	8 00E-03	3 53E-14	1 31E-04	2.59E+06	1 42E-06	
EU155	5 41E+02	10%	68	5.99E+06	1 95E-05	3.26E-12	3 00E-05	3 60E-13	8 00E-03	8.09E-15	2.99E-05	2 59E+06	2 23E-07	
AM241	2.78E+02	10%	68	5 99E+06	1.95E-05	3 26E-12	3 00E-05	1 85E-13	8 00E-03	2 87E-15	1.06E-05	2.59E+06	4.07E-08	
TE125M	1 93E+02	10%	68	5 99E+06	1.95E-05	3 26E-12	3 00E-05	1 29E-13	8 00E-03	1 22E-15	4.51E-06	2 59E+06	1.20E-08	
PU240	1.50E+02	10%	68	5 99E+06	1.95E-05	3 26E-12	3 00E-05	9.98E-14	8 00E-03	9.26E-18	3.43E-08	2.59E+06	7.08E-11	
SM151	9 76E+01	10%	68	5 99E+06	1.95E-05	3 26E-12	3.00E-05	6 49E-14	8.00E-03	7 09E-20	2.62E-10	2 59E+06	3 53E-13	
PU239	6 70E+01	10%	68	5 99E+06	1.95E-05	3 26E-12	3.00E-05	4 46E-14	8.00E-03	9 47E-18	3.50E-08	2.59E+06	3 24E-11	
BA137M	3 17E+04	10%	68	5 99E+06	1.95E-05	3 26E-12	3 00E-05	2 11E-11	8.00E-03	4 63E-14	1.71E-04	2.59E+06	7.48E-05	
RH106	4.71E+03	10%	68	5.99E+06	1.95E-05	3.26E-12	3 00E-05	3.13E-12	8 00E-03	1.72E-14	6 36E-05	2.59E+06	4 13E-06	
PR144M	3 48E+01	10%	68	5 99E+06	1.95E-05	3 26E-12	3 00E-05	2 31E-14	8.00E-03	8 16E-16	3.02E-06	2 59E+06	1.45E-09	
AM243	1 36E+01	10%	68	5 99E+06	1 95E-05	3 26E-12	3 00E-05	9.05E-15	8 00E-03	7.47E-15	2.76E-05	2.59E+06	5 18E-09	
CM242	9 82E+00	10%	68	5 99E+06	1.95E-05	3 26E-12	3 00E-05	6 53E-15	8 00E-03	1 06E-17	3 92E-08	2.59E+06	5.31E-12	
CM243	9 79E+00	10%	68	5.99E+06	1 95E-05	3 26E-12	3 00E-05	6 51E-15	8.00E-03	1 50E-14	5.55E-05	2 59E+06	7.49E-09	
NP239	1 36E+01	10%	68	5 99E+06	1.95E-05	3 26E-12	3 00E-05	9 05E-15	8 00E-03	2.00E-14	7 40E-05	2.59E+06	1.39E-08	
NP237	1.18E-01	10%	68	5 99E+06	1 95E-05	3.26E-12	3 00E-05	7 85E-17	8 00E-03	3 20E-15	1.18E-05	2 59E+06	1 93E-11	
PU242	9 04E-01	10%	68	5 99E+06	1.95E-05	3.26E-12	3.00E-05	6 01E-16	8.00E-03	7.90E-18	2.92E-08	2 59E+06	3 64E-13	
AM242	2.71E+00	10%	68	5.99E+06	1.95E-05	3 26E-12	3 00E-05	1.80E-15	8.00E-03	1 88E-15	6 96E-06	2 59E+06	2.60E-10	
AM242M	2 72E+00	10%	68	5 99E+06	1 95E-05	3 26E-12	3 00E-05	1.81E-15	8.00E-03	7.94E-17	2.94E-07	2 59E+06	1.10E-11	
												Total	2 04E-01	

MPC-68														
Accident Conditions														
Effective Dose Equivalent From Submersion														
Nuclide	Inventory (Ci/Assy)	% remain airborne	No Assy	MPC Vol (cm3)	L_{acc} Rate at Upstream (cm3/s)	Fraction Released per sec	Release Fraction	Release Rate (Ci/sec)	X/Q (sec/m3)	DCF (Sv/Bq)	DCF (mRem/uCi)	Occ Time (sec)	DDE (mRem)	
								Gases						
H 3	1 24E+02	100%	68	5 99E+06	1.95E-05	3 26E-12	0 30	8.23E-09	8 00E-03	0 00E+00	0.00E+00	2.59E+06	0 00E+00	
I129	1.12E-02	100%	68	5 99E+06	1.95E-05	3 26E-12	0 30	7.45E-13	8 00E-03	3.86E-16	1.43E-06	2 59E+06	2 20E-08	
KR 85	2 04E+03	100%	68	5 99E+06	1.95E-05	3 26E-12	0.30	1.36E-07	8.00E-03	1.18E-16	4.37E-07	2 59E+06	1.23E-03	
								Crud						
Co-60	6 50E+01	100%	68	5 99E+06	1.95E-05	3 26E-12	1.00	1.44E-08	8.00E-03	1.27E-13	4.70E-04	2.59E+06	1.40E-01	
								Volatiles						
SR 90	2 24E+04	100%	68	5 99E+06	1 95E-05	3 26E-12	2.00E-04	9 93E-10	8.00E-03	7.33E-18	2.71E-08	2.59E+06	5 58E-07	
RU106	4 71E+03	100%	68	5.99E+06	1 95E-05	3.26E-12	2 00E-04	2 09E-10	8.00E-03	0 00E+00	0 00E+00	2 59E+06	0 00E+00	
CS134	1.18E+04	100%	68	5 99E+06	1.95E-05	3 26E-12	2 00E-04	5.23E-10	8 00E-03	7 57E-14	2 80E-04	2.59E+06	3 04E-03	
CS137	3 35E+04	100%	68	5 99E+06	1 95E-05	3 26E-12	2.00E-04	1.49E-09	8.00E-03	7 55E-18	2 79E-08	2.59E+06	8 60E-07	
								Fines						
PU241	2 58E+04	10%	68	5.99E+06	1.95E-05	3.26E-12	3 00E-05	1 72E-11	8.00E-03	6 98E-20	2 58E-10	2.59E+06	9.18E-11	
Y 90	2.24E+04	10%	68	5 99E+06	1.95E-05	3.26E-12	3 00E-05	1.49E-11	8.00E-03	1.87E-16	6.92E-07	2.59E+06	2.14E-07	
PM147	9 63E+03	10%	68	5.99E+06	1 95E-05	3.26E-12	3 00E-05	6.41E-12	8.00E-03	6 75E-19	2 50E-09	2.59E+06	3.31E-10	
CE144	2 48E+03	10%	68	5.99E+06	1 95E-05	3.26E-12	3 00E-05	1.65E-12	8.00E-03	8.33E-16	3 08E-06	2.59E+06	1.05E-07	
PR144	2.48E+03	10%	68	5 99E+06	1 95E-05	3.26E-12	3.00E-05	1.65E-12	8 00E-03	1.95E-15	7.22E-06	2.59E+06	2.47E-07	
EU154	1.74E+03	10%	68	5 99E+06	1.95E-05	3 26E-12	3 00E-05	1.16E-12	8 00E-03	6.15E-14	2.28E-04	2.59E+06	5.46E-06	
CM244	2 38E+03	10%	68	5.99E+06	1.95E-05	3 26E-12	3.00E-05	1.58E-12	8 00E-03	4.19E-18	1.55E-08	2 59E+06	5 08E-10	
PU238	1.58E+03	10%	68	5 99E+06	1.95E-05	3.26E-12	3.00E-05	1.05E-12	8 00E-03	4.01E-18	1 48E-08	2.59E+06	3.23E-10	
SB125	7.91E+02	10%	68	5.99E+06	1.95E-05	3.26E-12	3 00E-05	5.26E-13	8.00E-03	2 01E-14	7.44E-05	2.59E+06	8.11E-07	
EU155	5 41E+02	10%	68	5 99E+06	1.95E-05	3 26E-12	3 00E-05	3 60E-13	8.00E-03	2.41E-15	8.92E-06	2.59E+06	6 65E-08	
AM241	2.78E+02	10%	68	5.99E+06	1.95E-05	3 26E-12	3.00E-05	1.85E-13	8.00E-03	7.83E-16	2.90E-06	2.59E+06	1.11E-08	
TE125M	1 93E+02	10%	68	5 99E+06	1 95E-05	3 26E-12	3 00E-05	1.29E-13	8 00E-03	4.64E-16	1.72E-06	2 59E+06	4.58E-09	
PU240	1 50E+02	10%	68	5 99E+06	1.95E-05	3.26E-12	3.00E-05	9 98E-14	8.00E-03	3 92E-18	1.45E-08	2.59E+06	3.00E-11	
SM151	9 76E+01	10%	68	5.99E+06	1.95E-05	3.26E-12	3.00E-05	6 49E-14	8 00E-03	3.58E-20	1.32E-10	2 59E+06	1.78E-13	
PU239	6.70E+01	10%	68	5 99E+06	1.95E-05	3.26E-12	3 00E-05	4.46E-14	8 00E-03	3 88E-18	1.44E-08	2.59E+06	1.33E-11	
BA137M	3.17E+04	10%	68	5 99E+06	1.95E-05	3 26E-12	3.00E-05	2.11E-11	8 00E-03	2.88E-14	1.07E-04	2.59E+06	4.66E-05	
RH106	4 71E+03	10%	68	5.99E+06	1.95E-05	3 26E-12	3.00E-05	3.13E-12	8.00E-03	1 03E-14	3 81E-05	2.59E+06	2 47E-06	
PR144M	3 48E+01	10%	68	5 99E+06	1.95E-05	3.26E-12	3 00E-05	2.31E-14	8.00E-03	2.81E-16	1.04E-06	2 59E+06	4.99E-10	
AM243	1 36E+01	10%	68	5.99E+06	1 95E-05	3.26E-12	3 00E-05	9 05E-15	8.00E-03	2 09E-15	7.73E-06	2 59E+06	1.45E-09	
CM242	9 82E+00	10%	68	5 99E+06	1.95E-05	3 26E-12	3.00E-05	6.53E-15	8 00E-03	4 91E-18	1 82E-08	2.59E+06	2.46E-12	
CM243	9 79E+00	10%	68	5.99E+06	1.95E-05	3.26E-12	3 00E-05	6.51E-15	8 00E-03	5 76E-15	2.13E-05	2.59E+06	2.88E-09	
NP239	1.36E+01	10%	68	5 99E+06	1.95E-05	3 26E-12	3.00E-05	9 05E-15	8 00E-03	7.52E-15	2.78E-05	2.59E+06	5.21E-09	
NP237	1.18E-01	10%	68	5 99E+06	1.95E-05	3.26E-12	3.00E-05	7.85E-17	8.00E-03	9 94E-16	3 68E-06	2.59E+06	5 98E-12	
PU242	9 04E-01	10%	68	5.99E+06	1.95E-05	3 26E-12	3 00E-05	6.01E-16	8 00E-03	3.32E-18	1.23E-08	2.59E+06	1.53E-13	
AM242	2.71E+00	10%	68	5 99E+06	1.95E-05	3 26E-12	3 00E-05	1.80E-15	8.00E-03	5 94E-16	2 20E-06	2.59E+06	8.21E-11	
AM242M	2.72E+00	10%	68	5 99E+06	1.95E-05	3 26E-12	3 00E-05	1.81E-15	8 00E-03	2 95E-17	1.09E-07	2.59E+06	4 09E-12	
												Total	1 45E-01	

MPC-68														
Accident Conditions														
Effective Dose Equivalent From Submersion														
Nuclide	Inventory (Ci/Assy)	% remain airborne	No Assy	MPC Vol (cm3)	L_{acc} Rate at Upstream (cm3/s)	Fraction Released per sec	Release Fraction	Release Rate (Ci/sec)	X/Q (sec/m3)	DCF (Sv/Bq)	DCF (mRem/uCi)	Occ Time (sec)	DDE (mRem)	
								Gases						
H 3	1 24E+02	100%	68	5.99E+06	1.95E-05	3 26E-12	0.30	8.23E-09	8.00E-03	3.31E-19	1.22E-09	2.59E+06	2.09E-07	
I129	1 12E-02	100%	68	5 99E+06	1.95E-05	3 26E-12	0 30	7.45E-13	8 00E-03	3 80E-16	1 41E-06	2.59E+06	2.17E-08	
KR 85	2.04E+03	100%	68	5.99E+06	1.95E-05	3 26E-12	0.30	1.36E-07	8 00E-03	1.19E-16	4.40E-07	2.59E+06	1.24E-03	
								Crud						
Co-60	6 50E+01	100%	68	5 99E+06	1.95E-05	3.26E-12	1.00	1.44E-08	8 00E-03	1.26E-13	4.66E-04	2.59E+06	1.39E-01	
								Volatiles						
SR 90	2 24E+04	100%	68	5 99E+06	1.95E-05	3.26E-12	2.00E-04	9.93E-10	8 00E-03	7.53E-18	2.79E-08	2.59E+06	5.73E-07	
RU106	4.71E+03	100%	68	5 99E+06	1.95E-05	3 26E-12	2 00E-04	2 09E-10	8.00E-03	0 00E+00	0 00E+00	2 59E+06	0 00E+00	
CS134	1.18E+04	100%	68	5 99E+06	1 95E-05	3 26E-12	2.00E-04	5 23E-10	8 00E-03	7 57E-14	2 80E-04	2.59E+06	3 04E-03	
CS137	3 35E+04	100%	68	5 99E+06	1.95E-05	3 26E-12	2 00E-04	1.49E-09	8 00E-03	7.74E-18	2.86E-08	2.59E+06	8.81E-07	
								Fines						
PU241	2.58E+04	10%	68	5 99E+06	1.95E-05	3 26E-12	3.00E-05	1.72E-11	8 00E-03	7.25E-20	2 68E-10	2 59E+06	9 54E-11	
Y 90	2 24E+04	10%	68	5 99E+06	1.95E-05	3 26E-12	3 00E-05	1.49E-11	8 00E-03	1.90E-16	7.03E-07	2.59E+06	2.17E-07	
PM147	9 63E+03	10%	68	5 99E+06	1.95E-05	3 26E-12	3.00E-05	6.41E-12	8.00E-03	6 93E-19	2.56E-09	2.59E+06	3 40E-10	
CE144	2 48E+03	10%	68	5 99E+06	1 95E-05	3.26E-12	3 00E-05	1 65E-12	8.00E-03	8 53E-16	3.16E-06	2.59E+06	1.08E-07	
PR144	2 48E+03	10%	68	5 99E+06	1.95E-05	3 26E-12	3.00E-05	1 65E-12	8 00E-03	1.95E-15	7.22E-06	2.59E+06	2 47E-07	
EU154	1.74E+03	10%	68	5.99E+06	1 95E-05	3 26E-12	3.00E-05	1.16E-12	8 00E-03	6.14E-14	2.27E-04	2.59E+06	5 45E-06	
CM244	2 38E+03	10%	68	5 99E+06	1.95E-05	3 26E-12	3 00E-05	1 58E-12	8.00E-03	4 91E-18	1 82E-08	2 59E+06	5 96E-10	
PU238	1 58E+03	10%	68	5 99E+06	1.95E-05	3 26E-12	3 00E-05	1.05E-12	8 00E-03	4 88E-18	1 81E-08	2.59E+06	3.93E-10	
SB125	7.91E+02	10%	68	5 99E+06	1.95E-05	3.26E-12	3 00E-05	5 26E-13	8 00E-03	2 02E-14	7.47E-05	2.59E+06	8 15E-07	
EU155	5.41E+02	10%	68	5.99E+06	1.95E-05	3 26E-12	3 00E-05	3 60E-13	8 00E-03	2.49E-15	9.21E-06	2.59E+06	6 87E-08	
AM241	2 78E+02	10%	68	5 99E+06	1.95E-05	3.26E-12	3.00E-05	1.85E-13	8.00E-03	8.18E-16	3 03E-06	2 59E+06	1.16E-08	
TE125M	1.93E+02	10%	68	5 99E+06	1 95E-05	3 26E-12	3 00E-05	1 29E-13	8 00E-03	4 53E-16	1.68E-06	2.59E+06	4.47E-09	
PU240	1 50E+02	10%	68	5 99E+06	1.95E-05	3.26E-12	3 00E-05	9 98E-14	8 00E-03	4 75E-18	1 76E-08	2 59E+06	3 63E-11	
SM151	9.76E+01	10%	68	5.99E+06	1 95E-05	3 26E-12	3.00E-05	6 49E-14	8.00E-03	3 61E-20	1.34E-10	2 59E+06	1.80E-13	
PU239	6 70E+01	10%	68	5 99E+06	1.95E-05	3 26E-12	3.00E-05	4.46E-14	8.00E-03	4 24E-18	1 57E-08	2.59E+06	1.45E-11	
BA137M	3 17E+04	10%	68	5 99E+06	1.95E-05	3 26E-12	3 00E-05	2.11E-11	8 00E-03	2 88E-14	1 07E-04	2.59E+06	4 66E-05	
RH106	4 71E+03	10%	68	5.99E+06	1.95E-05	3.26E-12	3.00E-05	3.13E-12	8.00E-03	1.04E-14	3.85E-05	2 59E+06	2 50E-06	
PR144M	3.48E+01	10%	68	5 99E+06	1 95E-05	3.26E-12	3 00E-05	2.31E-14	8.00E-03	2 79E-16	1 03E-06	2.59E+06	4 95E-10	
AM243	1 36E+01	10%	68	5 99E+06	1.95E-05	3 26E-12	3 00E-05	9.05E-15	8.00E-03	2 18E-15	8 07E-06	2.59E+06	1 51E-09	
CM242	9 82E+00	10%	68	5 99E+06	1 95E-05	3 26E-12	3.00E-05	6 53E-15	8 00E-03	5.69E-18	2.11E-08	2 59E+06	2 85E-12	
CM243	9 79E+00	10%	68	5 99E+06	1.95E-05	3 26E-12	3 00E-05	6.51E-15	8 00E-03	5 88E-15	2.18E-05	2.59E+06	2.94E-09	
NP239	1 36E+01	10%	68	5 99E+06	1 95E-05	3 26E-12	3 00E-05	9.05E-15	8.00E-03	7.69E-15	2 85E-05	2 59E+06	5.33E-09	
NP237	1.18E-01	10%	68	5 99E+06	1.95E-05	3 26E-12	3 00E-05	7.85E-17	8 00E-03	1 03E-15	3.81E-06	2.59E+06	6 20E-12	
PU242	9 04E-01	10%	68	5 99E+06	1.95E-05	3.26E-12	3.00E-05	6.01E-16	8.00E-03	4 01E-18	1.48E-08	2.59E+06	1 85E-13	
AM242	2 71E+00	10%	68	5 99E+06	1.95E-05	3 26E-12	3.00E-05	1 80E-15	8 00E-03	6.15E-16	2.28E-06	2 59E+06	8 50E-11	
AM242M	2 72E+00	10%	68	5 99E+06	1.95E-05	3.26E-12	3 00E-05	1.81E-15	8 00E-03	3.17E-17	1.17E-07	2 59E+06	4.40E-12	
												Total	1 44E-01	

MPC-68														
Accident Conditions														
Effective Dose Equivalent From Submersion														
Nuclide	Inventory (Ci/Assy)	% remain airborne	No. Assy	MPC Vol (cm3)	L_{acc} Rate at Upstream (cm3/s)	Fraction Released per sec	Release Fraction	Release Rate (Ci/sec)	X/Q (sec/m3)	DCF (Sv/Bq)	DCF (mRem/uCi)	Occ Time (sec)	SDE (mRem)	
								Gases						
H 3	1.24E+02	100%	68	5 99E+06	1.95E-05	3 26E-12	0.30	8 23E-09	8 00E-03	0 00E+00	0 00E+00	2.59E+06	0.00E+00	
I129	1.12E-02	100%	68	5 99E+06	1.95E-05	3.26E-12	0.30	7.45E-13	8 00E-03	1.10E-15	4 07E-06	2 59E+06	6 28E-08	
KR 85	2 04E+03	100%	68	5.99E+06	1.95E-05	3 26E-12	0 30	1.36E-07	8.00E-03	1.32E-14	4.88E-05	2.59E+06	1.37E-01	
								Crud						
Co-60	6 50E+01	100%	68	5 99E+06	1.95E-05	3 26E-12	1 00	1 44E-08	8 00E-03	1.45E-13	5.37E-04	2.59E+06	1.60E-01	
								Volatiles						
SR 90	2 24E+04	100%	68	5 99E+06	1 95E-05	3.26E-12	2.00E-04	9.93E-10	8.00E-03	9.20E-15	3 40E-05	2.59E+06	7.01E-04	
RU106	4.71E+03	100%	68	5 99E+06	1.95E-05	3.26E-12	2.00E-04	2 09E-10	8 00E-03	0 00E+00	0 00E+00	2.59E+06	0 00E+00	
CS134	1.18E+04	100%	68	5 99E+06	1.95E-05	3.26E-12	2 00E-04	5 23E-10	8 00E-03	9.45E-14	3.50E-04	2.59E+06	3.79E-03	
CS137	3.35E+04	100%	68	5.99E+06	1.95E-05	3 26E-12	2 00E-04	1.49E-09	8 00E-03	8 63E-15	3.19E-05	2.59E+06	9 83E-04	
								Fines						
PU241	2.58E+04	10%	68	5 99E+06	1.95E-05	3.26E-12	3 00E-05	1.72E-11	8 00E-03	1.17E-19	4 33E-10	2 59E+06	1 54E-10	
Y 90	2.24E+04	10%	68	5 99E+06	1 95E-05	3.26E-12	3.00E-05	1.49E-11	8 00E-03	6.24E-14	2.31E-04	2.59E+06	7.13E-05	
PM147	9.63E+03	10%	68	5 99E+06	1.95E-05	3.26E-12	3 00E-05	6.41E-12	8 00E-03	8.11E-16	3 00E-06	2 59E+06	3.98E-07	
CE144	2.48E+03	10%	68	5 99E+06	1.95E-05	3.26E-12	3.00E-05	1.65E-12	8 00E-03	2 93E-15	1.08E-05	2 59E+06	3.71E-07	
PR144	2.48E+03	10%	68	5.99E+06	1 95E-05	3.26E-12	3 00E-05	1.65E-12	8 00E-03	8 43E-14	3.12E-04	2.59E+06	1 07E-05	
EU154	1.74E+03	10%	68	5 99E+06	1 95E-05	3 26E-12	3 00E-05	1.16E-12	8 00E-03	8 29E-14	3 07E-04	2 59E+06	7.36E-06	
CM244	2.38E+03	10%	68	5.99E+06	1 95E-05	3 26E-12	3 00E-05	1.58E-12	8 00E-03	3 91E-17	1.45E-07	2 59E+06	4.75E-09	
PU238	1.58E+03	10%	68	5 99E+06	1.95E-05	3 26E-12	3 00E-05	1 05E-12	8.00E-03	4.09E-17	1 51E-07	2.59E+06	3 30E-09	
SB125	7.91E+02	10%	68	5.99E+06	1 95E-05	3 26E-12	3 00E-05	5.26E-13	8 00E-03	2 65E-14	9 81E-05	2 59E+06	1.07E-06	
EU155	5.41E+02	10%	68	5.99E+06	1.95E-05	3.26E-12	3.00E-05	3 60E-13	8 00E-03	3.39E-15	1.25E-05	2.59E+06	9.35E-08	
AM241	2.78E+02	10%	68	5 99E+06	1.95E-05	3.26E-12	3 00E-05	1 85E-13	8 00E-03	1.28E-15	4.74E-06	2.59E+06	1.81E-08	
TE125M	1 93E+02	10%	68	5 99E+06	1.95E-05	3.26E-12	3 00E-05	1 29E-13	8 00E-03	1.94E-15	7.18E-06	2.59E+06	1.91E-08	
PU240	1 50E+02	10%	68	5 99E+06	1.95E-05	3.26E-12	3.00E-05	9 98E-14	8.00E-03	3.92E-17	1.45E-07	2 59E+06	3 00E-10	
SM151	9.76E+01	10%	68	5 99E+06	1 95E-05	3.26E-12	3.00E-05	6.49E-14	8 00E-03	1.90E-19	7.03E-10	2.59E+06	9.46E-13	
PU239	6.70E+01	10%	68	5 99E+06	1.95E-05	3.26E-12	3 00E-05	4 46E-14	8.00E-03	1.86E-17	6.88E-08	2.59E+06	6.35E-11	
BA137M	3.17E+04	10%	68	5.99E+06	1.95E-05	3 26E-12	3 00E-05	2.11E-11	8 00E-03	3.73E-14	1.38E-04	2 59E+06	6.03E-05	
RH106	4 71E+03	10%	68	5 99E+06	1.95E-05	3.26E-12	3.00E-05	3.13E-12	8.00E-03	1.09E-13	4 03E-04	2.59E+06	2.62E-05	
PR144M	3.48E+01	10%	68	5.99E+06	1.95E-05	3 26E-12	3 00E-05	2.31E-14	8 00E-03	5 08E-16	1 88E-06	2.59E+06	9 01E-10	
AM243	1.36E+01	10%	68	5 99E+06	1 95E-05	3.26E-12	3 00E-05	9 05E-15	8 00E-03	2.75E-15	1.02E-05	2.59E+06	1.91E-09	
CM242	9 82E+00	10%	68	5 99E+06	1.95E-05	3 26E-12	3.00E-05	6 53E-15	8 00E-03	4.29E-17	1.59E-07	2.59E+06	2.15E-11	
CM243	9.79E+00	10%	68	5 99E+06	1.95E-05	3 26E-12	3 00E-05	6.51E-15	8.00E-03	9.79E-15	3 62E-05	2 59E+06	4 89E-09	
NP239	1 36E+01	10%	68	5.99E+06	1 95E-05	3 26E-12	3 00E-05	9.05E-15	8 00E-03	1 60E-14	5 92E-05	2 59E+06	1.11E-08	
NP237	1.18E-01	10%	68	5 99E+06	1.95E-05	3 26E-12	3 00E-05	7.85E-17	8.00E-03	1.54E-15	5 70E-06	2.59E+06	9 27E-12	
PU242	9.04E-01	10%	68	5.99E+06	1.95E-05	3 26E-12	3.00E-05	6 01E-16	8 00E-03	3 27E-17	1.21E-07	2.59E+06	1.51E-12	
AM242	2 71E+00	10%	68	5 99E+06	1.95E-05	3 26E-12	3 00E-05	1.80E-15	8 00E-03	8 20E-15	3.03E-05	2 59E+06	1.13E-09	
AM242M	2.72E+00	10%	68	5.99E+06	1 95E-05	3.26E-12	3 00E-05	1.81E-15	8.00E-03	1.36E-16	5 03E-07	2 59E+06	1 89E-11	
												Total	3 03E-01	