SOUTHERN CALIFORNIA
EDISON
An *EDISON INTERNATIONAL* Company

# SAN ONOFRE NUCLEAR GENERATING STATION UNIT-2 2ND INTERVAL, 3RD PERIOD REFUELING OUTAGE-12

# INSERVICE INSPECTION SUMMARY REPORT

# TABLE OF CONTENTS

SECTION PAGE

1 Introduction....2

2 Plan & Schedule....3

3 Summary Report....5

Refueling Outage Number....6
Form NIS-1....7
Abstract of Examinations & Tests....9
Abstract of Results of Examinations & Tests....10
Abstract of Corrective Measures....11

4 Abstract of NIS-2 Repair & Replacements....12

5 Procedures....13
NDE Procedures....13
Program Procedures....14

6 Mechanical Seal Assembly (MNSA)
Visual Examination Results....15

7 Steam Generator Examinations....16

ATTACHMENTS

8 Attachment-1, List of Completed ISI NDE Examinations and System Pressure Tests

9 Attachment-2, Form NIS-2 Owner's Reports For Repairs and Replacements

# 1 INTRODUCTION

This document refers to the implementation of the Inservice Inspection (ISI) conducted at the San Onofre Nuclear Generating Station (SONGS) Unit 2 for the Third Period of the 2nd Interval.

| | |
|---|---|
| 1st Interval | August 18, 1983 through August 17, 1993 |
| 2nd Interval | August 18, 1993 through August 17, 2003 |

Each 10-year Interval is further divided into 3 periods, which is adjusted to accommodate one or two refueling outages in each period. Adjustments of the intervals to accommodate these refueling outages are allowed by the Code to extend or decrease the interval by as much as 1 year. This extension was used in the 1st 10-year interval, which ended in March 1994.

The 1st and 2nd 10-year intervals are:

| | |
|---|---|
| 1st Interval | August 18, 1983 through March 31, 1994 |
| 2nd Interval | April 1, 1994 through August 17, 2003 |

The three periods for the 2nd 10-year interval are as follows:

| PERIODS | DATES | OUTAGES |
|---|---|---|
| 1 | Apr 1, 1994 - Aug 17, 1997 | U2C8, U2C9 |
| 2 | Aug 18, 1997 - Aug 17, 2001 | U2C10, U2C11 |
| 3 | Aug 18, 2001 - Aug 17, 2003 | U2C12 |

ASME Code Section XI, Article IWA-6000, Records & Reports, the ISI Program 90063 Rev 6, and the ISI procedures were used to put this report together. This report is intended to provide a summary of the ISI activities performed during the Unit 2 Cycle 12 outage. Detailed descriptions of these activities are documented, controlled and maintained in accordance with the Owner's Technical Specification commitments.

## 2 PLAN & SCHEDULE

| SUBSECTION | CATEGORY | TOTAL EXAMS REQUIRED | PERIOD 1 | PERIOD 2 | PERIOD 3 |
|---|---|---|---|---|---|
| IWB | B-A | 27 | 3 | 2 | 22 |
| | B-B | 8 | 3 | 2 | 3 |
| | B-D | 34 | 10 | 0 | 24 |
| | B-F | 28 | 10 | 9 | 9 |
| | B-G-1 | 248 | 84 | 82 | 82 |
| | B-G-2 | 178 | 61 | 59 | 60 |
| | B-J | 165 | 57 | 54 | 54 |
| | B-K | 10 | 8 | 3 | 4 |
| | B-L-1 | 2 | 0 | 0 | 2 |
| | B-L-2 | ( See Note-3 ) | 0 | 0 | 1 |
| | B-M-1 | 8 | 2 | 0 | 6 |
| | B-M-2 | ( See Note-3) | 0 | 2 | 0 |
| | B-N-1 | 3 | 1 | 1 | 1 |
| | B-N-2 | 30 | 0 | 0 | 30 |
| | B-N-3 | 2 | 0 | 0 | 2 |
| | B-O | 10 | 0 | 0 | 10 |
| | B-P | Each Refueling Outage | | | |
| | B-Q | Per Tech Spec | | | |
| IWC | C-A | 20 | 7 | 6 | 7 |
| | C-B | 8 | 2 | 2 | 4 |
| | C-C | 48 | 26 | 15 | 16 |
| | C-F-1 | 140 | 47 | 47 | 46 |
| | C-F-2 | 29 | 14 | 12 | 10 |
| | C-G | 5 | 1 | 2 | 2 |
| | C-H | Each Inspection Period | | | |
| IWD | D-A (System Pressure Test) | Each Inspection Period | | | |
| | D-B (System Pressure Test) | Each Inspection Period | | | |
| | D-C (System Pressure Test) | Each Inspection Period | | | |
| | D-A (Integral Attach's) | 59 | 21 | 20 | 21 |

## 2 PLAN & SCHEDULE

| SUBSECTION | CATEGORY | TOTAL EXAMS REQUIRED | PERIOD 1 | PERIOD 2 | PERIOD 3 |
|---|---|---|---|---|---|
| IWF | F-A | 284 | 97 | 93 | 99 |
| IWE | E-A | 443 | 1 | 1 | 441 |
| | E-C | 9 | 3 | 3 | 3 |
| | E-D | 3 | 1 | 1 | 1 |
| | E-G | 101 | 0 | 0 | 101 |
| | E-P ER 10 CFR 50 APPENDIX J | | | | |
| IWL | LA (Concrete surfaces) Every ten years | | | | |
| | LB (Unbonded Post-Tensioning System) Every five years alternative, Item L2.10, L2.20, and L2.30, L2.40, L2.50 | | | | |
| | Augmented ISI for Reactor Coolant pump flywheels and high energy lines | | | | |
| | Flywheels | 4 | 4 | 0 | 4 |
| | High Energy line welds | 208 | 68 | 71 | 69 |

Notes:

1) For Class MC components (IWE), 1st Period examination were completed during U2C11 refueling outage (November 16, 2000). 10CFR 50.55a required licensees to complete first period examinations by September 9, 2001.
Remaining two periods for the first Interval IWE, second period: September 9, 2001 to September 8, 2005, 3rd Period: September 9, 2005 to September 8, 2008.

2) For Class CC components (IWL), Inspection Schedule shall comply with IWL-2421.

3) Examination required only when pump or valve is disassembled.

## 3 SUMMARY REPORT

**Date of Document Completion**.....August 16, 2002

**Name & Address of Owners:**

Southern California Edison
2244 Walnut Grove Ave.
Rosemead, CA 91770

San Diego Gas & Electric Co.
101 Ash St.
San Diego, CA 92112

City of Anaheim
Public Utilities Department
City Hall West - 8th Floor
Ste. 802, 201 S. Anaheim Blvd.
Anaheim, CA 92805

City of Riverside
Public Utilities Department
3900 Main St.
Riverside, CA 92522

**Name & Address of Generating Plant:**

San Onofre Nuclear Generating Station
5000 Pacific Coast Hwy
San Clemente, CA 92672

**Number Designation of the Unit**.....Unit 2

**Commercial Service Date for the Unit**.....August 18, 1983

**REFUELING OUTAGE NO.**

**Refueling Outage Number:**

# U2C12

**(5 Pages)**

**FORM NIS-1 OWNER'S REPORT FOR INSERVICE INSPECTIONS**
**As required by the Provisions of the ASME Code Rules**

1. **Owner:** Southern California Edison Company
2244 Walnut Grove Avenue, Rosemead, CA 91770

2. **Plant:** San Onofre Nuclear Generating Station
5000 Pacific Coast Hwy
San Clemente, CA 92672

3. **Plant Unit:** 2

4. **Owner's Certificate of Authorization:** N/A

5. **Commercial Service Date:** 8/18/83

6. **National Board Number for Unit:** N/A

7. **Components Inspected:**

| Component or Appurtenance | Manufacturer or Installer | Manufacturer or Installer Serial Number | State or Province Number | National Board Number |
|---|---|---|---|---|
| Reactor Vessel 2MV1101 | Combustion Engineering | 71170 | 35203-82 | 22000 |
| Pressurizer 2ME087 | Combustion Engineering | 70602 | 35203-82 | 21495 |
| Reactor Coolant Pump 2MP003 | Byron Jackson | 701-N-0560 | N/A | N/A |
| Steam Gen 2ME088 | Combustion Engineering | 71270-2 | 35203-82 | 22219 |
| Steam Gen 2ME089 | Combustion Engineering | 71270-1 | 35203-82 | 22218 |

**FORM NIS-1 (back)**

8. **Examination Date:** November 17, 2000 to July 2, 2002
9. **Inspection Period Identification:** ____ 1st Period ____ 2nd Period __X__ 3rd Period
10. **Inspection Interval:** ____ 1st 10-Yr __X__ 2nd 10-Yr ____ 3rd 10-Yr ____ 4th 10-Yr
11. **Applicable Edition of Section XI...** IWB, IWC, IWD, IWF, 1989 Edition, No Addenda, IWE, IWL 1992 Edition with 1992 Addenda, App.VIII (PDI) 1995Edition with 1996 Addenda
12. **Date/Revision of Inspection Plan...** October 5, 1999 Doc # 90063, Rev 6, DCN 51 THRU 58
13. **Abstract of Examination & Test.....** See page 9
14. **Abstract of Results of Examinations & Tests:.....** See page 10
15. **Abstract of Corrective Measures:.....** See page 11

**We certify that a) the statement made in this report are correct, b) the examinations and tests meet the Inspection Plan as required by the ASME Code, Section XI, and c) corrective measures taken conform to the rules of the ASME Code, Section XI.**

**Certificate of Authorization No.** N/A **Expiration Date:** N/A

**Date:** 8-26-02 **Signed:** Southern California Edison (Owner) **By:** [signature]
Manager, Maintenance Engineering

## CERTIFICATE OF INSERVICE INSPECTION

I, the undersigned, holding a valid commission issued by the National Board of Boiler and Pressure Vessel Inspectors and the State of California and employed by Factory Mutual Insurance Company of Johnston, Rhode Island, have inspected the components described in this Owner's Report during the period November 17, 2000 to July 2, 2002 and state that to the best of my knowledge and belief, the Owner has performed examinations and tests and taken corrective measures described in this Owner's Report in accordance with the Inspection Plan and as required by the ASME Code, Section XI.

By signing this certificate neither the Inspector nor his employer makes any warranty, expressed or implied, concerning the examinations, tests, and corrective measures described in this Owner's Report. Furthermore, neither the inspector nor his employer shall be liable in any manner for any personal injury or property damage or a loss of any kind arising from or connected with this inspection.

[signature] Commissions CA 1574 N, I
Inspector's Signature NB, State, Province or Endorsements

Date: 8/29/02

## ABSTRACT OF EXAMINATIONS & TESTS

This report covers the inservice examination activities conducted at the San Onofre Nuclear Generating Station (SONGS), Unit 2. The examinations and tests were performed during third period of the 2nd 10-year interval as described in approved ISI program procedures and document 90063. The inservice examinations were conducted in accordance with 10 CFR Part 50.55a and ASME Boiler and Pressure Vessel Code Section XI.

The NDE services were provided by Wesdyne International LLC, a Subsidiary of Westinghouse Electric LLC and Lambert, MacGill, Thomas, Inc. Additional services were provided by SCE.

List of examinations and tests performed during third period are included in attachment-1.

Factory Mutual Insurance Company provided the services of the Authorized Inspection Agency (AIA) Authorized Nuclear Inservice Inspectors (ANII's).

## ABSTRACT OF RESULTS OF EXAMINATIONS & TESTS

The inservice and preservice examinations conducted at SONGS 2 were performed between November 17, 2000 and July 2, 2002. These examinations were performed to fulfill the requirements of 10CFR 50.55a(g)(4) and IWA-1400, Owner's Responsibilities of ASME Code Section XI.

The number of components and supports for Class 1 and 2 selected for examination were based on the ISI Program Plan Doc. # 90063, Rev. 6 and ISI program procedures employing Inspection Program Plan B of the ASME Code Section XI.

All the pressure retaining components of ASME Class 1, 2 and 3 System pressure test were performed per the requirement of ASME Code Section XI. Twenty-year post tensioning system surveillance was performed per Subsection IWL and 10CFR 50.55a during summer of 2001.

All the NDE personnel were qualified and certified in accordance with the 10CFR 50.55a and Section XI Code requirements.

All the NDE examinations were found Code acceptable.

## ABSTRACT OF CORRECTIVE MEASURES

All the ISI NDE examinations were found Code acceptable, hence corrective measures were not needed.

# 4 ABSTRACT OF NIS-2 REPAIRS & REPLACEMENTS

**Unit 2 Cycle 12**

**Abstract of Records of Repairs and Replacements**

**(2 Pages)**

# Unit 2 Cycle 12
## Abstract of Records of Repairs and Replacements

| | MO | EQID | Class | NIS-2 | Worksum |
|---|---|---|---|---|---|
| 1 | 00021251000 | 026-44409-N60061-00-0003-IST | III-2 | 1/11/02 | Rebuilt relief valve (L-Top) |
| 2 | 00021515000 | 026-44409-N60061-00-0002-IST | III-2 | 1/11/02 | Rebuilt relief valve (L-Top) |
| 3 | 00080665000 | 2HV8160 | III-2 | 8/6/02 | Replaced valve bonnet bolting |
| 4 | 00110659000 | 027-34259 | III-2 | 11/7/01 | Weld repaired valve bonnet |
| 5 | 00111305000 | S21201MP004 | III-1 | 1/11/02 | Replaced mechanical seal cartridge |
| 6 | 00111481001 | S21104CEDM | III-1 | 8/16/02 | Replaced ball seal housing nut/restored weld prep |
| 7 | 00111571000 | S21201MP003 | III-1 | 7/30/02 | Replaced RCP case nuts and installed pump case |
| 8 | 01010120000 | S21201MP001 | III-1 | 1/11/02 | Replaced mechanical seal cartridge |
| 9 | 01010236000 | S21201MP002 | III-1 | 1/11/02 | Replaced mechanical seal cartridge |
| 10 | 01010806000 | 027-81177 | III-2 | 7/23/01 | Manufactured MSSV inlet studs |
| 11 | 01011704000 | S21201MP003 | III-1 | 7/15/02 | Replaced mechanical seal cartridge |
| 12 | 01030424000 | 025-83508-N59380-00-0009 | III-2 | 11/7/01 | Replaced valve disc |
| 13 | 01030679000 | S21301ME089P | III-1 | 8/16/02 | Performed SG tube sleeving |
| 14 | 01030777000 | S21301ME088P | III-1 | 8/16/02 | Performed SG tube sleeving |
| 15 | 01040807000 | S21301ME089 | III-2 | 8/6/02 | Replaced SG handhole cover bolting |
| 16 | 01040817000 | S21301ME088 | III-2 | 7/17/02 | Replaced SG manway cover bolting |
| 17 | 01041056000 | 2C501 | III-MC | 8/9/02 | Installed pipe plug on containment hatch |
| 18 | 01050151000 | 2PSV0200 | III-1 | 8/6/02 | Replaced pressurizer safety valve |
| 19 | 01050186000 | 2PSV0201 | III-1 | 8/6/02 | Replaced pressurizer safety valve |
| 20 | 01050208000 | 2PSV8403 | III-2 | 8/6/02 | Replaced safety relief valve and inlet bolting |
| 21 | 01050241000 | 2PSV8409 | III-2 | 8/6/02 | Replaced safety relief valve and inlet bolting |
| 22 | 01050245000 | 2PSV8410 | III-2 | 8/6/02 | Replaced safety relief valve and inlet bolting |
| 23 | 01050249000 | 2PSV8412 | III-2 | 8/6/02 | Replaced safety relief valve and inlet bolting |
| 24 | 01050262000 | 2PSV8417 | III-2 | 8/6/02 | Replaced safety relief valve and inlet bolting |
| 25 | 01050266000 | 2PSV8418 | III-2 | 8/6/02 | Replaced safety relief valve and inlet bolting |
| 26 | 01050319000 | 2PSV9321 | III-2 | 7/17/02 | Replaced safety relief valve |
| 27 | 01052106000 | 2LV0110B | III-2 | 6/6/02 | Replaced valve spindle |
| 28 | 01061346000 | 027-81177 | III-2 | 8/17/01 | Manufactured MSSV inlet studs |
| 29 | 01081177000 | 027-34259-RIDR-10411 | III-2 | 11/7/01 | Machined spare valve bonnet |
| 30 | 01090872000 | S21201ML001 | III-1 | 8/8/02 | Replaced RCS loop thermowells |
| 31 | 01090874000 | S21201ML002 | III-1 | 8/8/02 | Replaced RCS loop thermowells |
| 32 | 01090875000 | S21201ML007 | III-1 | 8/8/02 | Replaced RCS loop thermowells |
| 33 | 01090877000 | S21201ML008 | III-1 | 8/8/02 | Replaced RCS loop thermowells |
| 34 | 01090881000 | S21201ML010 | III-1 | 8/8/02 | Replaced RCS loop thermowells |

## Unit 2 Cycle 12
## Abstract of Records of Repairs and Replacements

| | MO | EQID | Class | NIS-2 | Worksum |
|---|---|---|---|---|---|
| 35 | 01102364000 | S21104CEDM | III-1 | 1/11/02 | Seal welded housing nut to ball seal housing |
| 36 | 01110150000 | 025-83508-N59380-00-0006 | III-2 | 7/17/02 | Rebuilt safety relief valve |
| 37 | 01110333000 | 025-83508-N59380-00-0009 | III-2 | 1/11/02 | Rebuilt safety relief valve |
| 38 | 01111127000 | S21201MP003 | III-1 | 7/30/02 | Replaced RCP case nuts |
| 39 | 02011627000 | 2PSV9349 | III-2 | 7/30/02 | Replaced L-Top valve |
| 40 | 02012715000 | S21201MP002 | III-1 | 8/6/02 | Replaced mechanical seal cartridge |
| 41 | 02021404000 | 2PSV9227 | III-2 | 6/10/02 | Cut & rewelded pipe to align discharge flange |
| 42 | 02031192001 | 2PSV9220 | III-2 | 7/17/02 | Replaced safety relief valve and inlet studs |
| 43 | 02031210000 | S21201MU976 | III-1 | 7/17/02 | Replaced valve disc |
| 44 | 02040446000 | S21201MP001 | III-1 | 8/6/02 | Replaced mechanical seal cartridge |
| 45 | 02040447000 | S21201MP004 | III-1 | 8/6/02 | Replaced mechanical seal cartridge |
| 46 | 02040871000 | S21201ME625 | III-1 | 7/12/02 | Replaced pressurizer heater |
| 47 | 02050119001 | S21104CEDM | III-1 | 8/16/02 | Replaced ball seal housing nut/restored weld prep |
| 48 | 02050624000 | 026-27164 SN# N59381-00-0003 | III-2 | 6/4/02 | Rebuilt valve with new disc and nozzle |
| 49 | 02051085000 | S21201MU021 | III-1 | 7/30/02 | Replace valve and associated piping |
| 50 | 02051372000 | S2RCP03H001 | III-1 | 6/12/02 | Ground off portion of snubber rear bracket |
| 51 | 02051509000 | S21201MP003 | III-1 | 7/30/02 | Replaced RCP case nuts |
| 52 | 02051799000 | S2FW189H013A | III-2 | 7/17/02 | Replaced snubbers |
| 53 | 02060029000 | 2HV9372 | III-2 | 8/16/02 | Replaced valve plug |
| 54 | 02060898000 | 2HV4053 | III-2 | 8/9/02 | Replaced valve plugs |
| 55 | 02061423000 | 2L491B | III-1 | 7/30/02 | Replaced & modified instrument flange adapter hubs |
| 56 | 02061431000 | S21101MV001 | III-1 | 7/30/02 | Replaced & modified instrument flange adapter hubs |
| 57 | 02061432000 | S21101MV001 | III-1 | 7/30/02 | Replaced & modified instrument flange adapter hubs |
| 58 | 02061858000 | S21201MU129 | III-1 | 8/15/02 | Performed body-to-cover seal weld |
| 59 | 96033780000 | 2HV4048 | III-2 | 8/16/02 | Machined valve bonnet |
| 60 | 99082068000 | 2HV4048 | III-2 | 8/16/02 | Modified body drain configuration |
| 61 | 99091998000 | S21204MU019 | III-1 | 7/17/02 | Replaced hinge pin covers |
| 62 | 99121328001 | 2PSV9227 | III-2 | 7/23/01 | Replaced safety relief valve |
| 63 | SOG-01-001* | 027-83249 | III-1 | 3/1/02 | Weed Instr. Fabricated thermowells |

*** Hardcopy Traveler**

# 5 PROCEDURES

**NDE PROCEDURES:**

| | |
|---|---|
| SO23-XXVII-20.47 | Magnetic Particle Examination |
| SO23-XXVII-20.48 | Liquid Penetrant Examination |
| SO23-XXVII-20.49 | Visual Examination Procedure to Determine the Condition of Nuclear Parts, Components and Surfaces |
| SO23-XXVII-20.51 | Visual Examination Procedure for Operability of Nuclear Components and Supports and Conditions Relating to their Functional Adequacy |
| SO23-XXVII-20.55 | UT Examination of Nuclear Cooling System Austenitic Piping |
| SO23-XXVII-20.56 | UT Flaw Sizing |
| SO23-XXVII-20.59 | Planar Size Characterization to ASME Section XI Code Requirements |
| SO23-XXVII-20.63 | UT Examination of Vessel Coolant Pump Flywheels |
| SO23-XXVII-20.66 | UT of Vessel Welds & Adjacent Base Metal |
| SO23-XXVII-20.67 | UT Examination of Vessel Coolant Pump Flywheels without inner bore keyways |
| SO23-XXVII-30.5 | Ultrasonic Examination of Ferritic Piping Welds |
| SO23-XXVII-30.6 | Ultrasonic Examination of Austenitic Piping Welds |
| SO23-XXVII-30.7 | Ultrasonic Examination of Bolts and Studs |
| SO23-XXVII-30.8 | Ultrasonic Through Wall sizing in pipe welds |
| SO23-XXVII-30.10 | Ultrasonic Examination of RPV closure head welds & adjacent base metal |
| SO23-XXVII-30.11 | Manual Through Wall & Length sizing of UT indication in RPV welds |
| SO23-XXVII-30.50.2 | Pulser / Receiver Linearity Procedure |
| SO23-XXVII-30.50.4 | UT instrument Linearity Qualification |
| SO23-XXVII-30.50.5 | Manual UT Examination of RPV upper shell to flange |
| SO23-XXVII-30.50.6 | Manual UT Examination of RPV threads in flange |
| SO23-XXVII-30.50.7 | Underwater Remote Visual Examination of RPV internals |
| SO23-XXVII-30.50.8 | Remote Inservice examination of RPV shell welds |
| SO23-XXVII-30.50.9 | Remote Inservice examination of RPV welds |

## 5 PROCEDURES

ISI Program Procedures

| | |
|---|---|
| SO123-IN-1 | Inservice Inspection Program |
| SO123-XVII-1 | Inservice Inspection Program Implementation |
| SO123-XVII-1.1 | Inservice Inspection Maintenance |
| SO23-XVII-2 | Inservice Inspection of Reactor Coolant Pump Flywheels |
| SO23-XVII-3.1 | Inservice Inspection of Class 1 Components and Their Supports |
| SO23-XVII-3.1.1 | Refueling Outage Interval Examination of the Reactor Coolant Pressure Boundary to Detect Leakage |
| SO23-XVII-3.2 | Inservice Inspection of Class 2 Components and Their Supports |
| SO23-XVII-3.3 | Inservice Inspection of Class 3 Components and Their Supports |
| SO123-XVII-3.4 | Location Reference Markers |
| SO23-XXIV-3.8 | Containment Structural Integrity Surveillance |

## 6 MECHANICAL SEAL ASSEMBLY (MNSA), VISUAL EXAMINATION RESULTS

As stated in letter from SCE to U.S. NRC Document Control Desk dated December 24, 2001, Subject: Docket Nos. 50-361 and 50-362, Mechanical Nozzle Seal Assembly (MNSA), Code Replacement Request from 10CFR 50.55a San Onofre Nuclear Generating Station, Units 2 and 3, SCE performed and documented visual examination of all installed MNSA's in Unit 2. Unit 3 is scheduled to complete during the Unit 3 Cycle 12 outage. Results of the inspection were acceptable per approved procedures and Code.

## 7 STEAM GENERATOR EXAMINATIONS

On June 2, 2002 SCE completed the inservice inspection of steam generator tubes at San Onofre Nuclear Generating Station Unit 2 and transmitted the results per Technical Specification 5.7.2.c.

The examination report was previously submitted to the US NRC on June 14 and June 19, 2002. A copy of this examination report is attached.

SOUTHERN CALIFORNIA
EDISON
'ISON INTERNATIONAL™ Company

Dwight E. Nunn
Vice President

June 19, 2002

U. S. Nuclear Regulatory Commission
Document Control Desk
Washington, DC 20555

Subject: **Docket No. 50-361**
**Errata Sheet: Inservice Inspection of Steam Generator Tubes, Cycle 12, dated June 14, 2002**
**San Onofre Nuclear Generating Station, Unit 2**

Reference: Southern California Edison Letter from D. E. Nunn to U. S. Nuclear Regular Commission Document Control Desk, dated June 14, 2002

Gentlemen:

This letter provides a single page errata sheet for the above referenced letter. Please replace report page 2 of 17 with the enclosed replacement page.

If you have any questions, please contact Mr. Clay E. Williams at (949)-368-6707.

Sincerely,

Attachment:

cc: E. W. Merschoff, Regional Administrator, NRC Region IV
A. B. Wang, NRC Project Manager, San Onofre Units 2 & 3
C. C. Osterholtz, NRC Senior Resident Inspector, San Onofre Units 2 & 3
Institute of Nuclear Power Operations (INPO)

P. O. Box 128
San Clemente, CA 92674-0128
949-368-1480
Fax 949-368-1490

SOUTHERN CALIFORNIA
EDISON
"EDISON INTERNATIONAL" Company

Dwight E. Nunn
Vice President

June 14, 2002

U. S. Nuclear Regulatory Commission
Document Control Desk
Washington, DC 20555

Subject: **Docket No. 50-361**
**Special Report: Inservice Inspection of Steam Generator Tubes, Cycle 12**
**San Onofre Nuclear Generating Station, Unit 2**

Gentlemen:

On June 2, 2002, Southern California Edison (SCE) completed the inservice inspection of steam generator tubes at San Onofre Nuclear Generating Station Unit 2. Technical Specification (TS) 5.7.2.c requires SCE to:

- Report the number of tubes plugged and tubes sleeved in each steam generator within 15 days of completing the inspection.
- Report the results of the steam generator tube inspections which fall into Category C-3 prior to resumption of plant operation. This report is required to include a description of the investigations conducted to determine the cause of the tube degradation and corrective measures taken to prevent recurrence.
- Report the complete results of steam generator tube inspections within 12 months of inspection completion.

The attachment to this letter, "Special Report – Inservice Inspection of Steam Generator Tubes," satisfies these requirements. This report also follows the guidance contained in NEI 97-06, Rev. 1, "Steam Generator Program Guidelines," dated January 2001 and contains no new commitments.

If you require any additional information, please advise.

Sincerely,

Attachments:

cc: E. W. Merschoff, Regional Administrator, NRC Region IV
A. B. Wang, NRC Project Manager, San Onofre Units 2 & 3
C. C. Osterholtz, NRC Senior Resident Inspector, San Onofre Units 2 & 3
Institute of Nuclear Power Operations (INPO)

P. O. Box 128
San Clemente, CA 92674-0128
949-368-1480
Fax 949-368-1490

# SPECIAL REPORT - INSERVICE INSPECTION OF STEAM GENERATOR TUBES

## Regulatory Reporting Requirements

Reporting Requirement 5.7.2.c of Appendix A, Technical Specification to Facility Operating License NPF-10, requires the number of tubes plugged and tubes sleeved in each steam generator to be reported the Nuclear Regulatory Commission within 15 days following completion of the inspection.

Reporting Requirement 5.7.2.c of Appendix A, Technical Specification to Facility Operating License NPF-10, requires the results of steam generator tube inspections which fall into Category C-3 to be reported the Nuclear Regulatory Commission prior to resumption of plant operation.

Reporting Requirement 5.7.2.c of Appendix A, Technical Specification to Facility Operating License NPF-10, requires the complete results of steam generator tube inspections to be reported the Nuclear Regulatory Commission within 12 months following completion of the inspection.

## Planned Inspection Scope

Table 1 summarizes the planned inspection program. Also, when indications by the bobbin probe were non-quantifiable or distorted, the inspection program included inspection with the Plus-Point Probe. Table 2 provides the list of Nondestructive Examination (NDE) techniques utilized for each degradation mechanism.

There were no significant inspection program scope expansions in response to inspection results.

## Results

This report satisfies the listed regulatory reporting requirements.

The contents of this report were prepared using the guidance contained in NEI 97-06, Rev. 1, "Steam Generator Program Guidelines." The NEI guidance is an initiative to unify the industry approach towards steam generator issues and strengthen, where necessary, the steam generator program.

Table 3 summarizes the number of tubes repaired and active degradation mechanisms found. Each tube is only counted once in this listing, although it may also have an eddy current indication of a type below the point in the listing where it appears. The Appendices provide the complete results of the steam generator tubing inservice inspection.

Table 4 summarizes in-situ pressure and leak testing results. This particular testing demonstrated the structural and leakage (i.e., there was no leakage) integrity of the tested tubes consistent with EPRI guidelines. Eddy current testing results and in-situ pressure and leak testing results (Condition Monitoring) provide assurance that performance criteria in the NEI guidance (structural integrity and accident-induced leakage) were met during operation prior to this inspection.

**Repair of Tubes**

Table 5 provides an itemized listing of the tubes plugged in steam generator E-088 along with the corresponding Table 3 category specifying the indication orientation/location.

Table 6 provides an itemized listing of the tubes sleeved in steam generator E-088 along with the corresponding Table 3 category specifying the indication orientation/location.

Table 7 provides an itemized listing of tubes plugged in steam generator E-089 along with the corresponding Table 3 category specifying the indication orientation/location.

Table 8 provides an itemized listing of the tubes sleeved in steam generator E-089 along with the corresponding Table 3 category specifying the indication orientation/location.

**Repair Methods, Number of Tubes Repaired and Effective Plugging Percentage**

All tube plugging was performed using the design, materials, and installation methods of FRAMATOME ANP (FANP). A "roll" method was used for all tube plugs. One tube was "stabilized" in the vicinity of the top of the tubesheet using the design, materials, and installation methods of FANP.

All tube sleeving was performed using the welded sleeve design, materials, and installation methods of Westinghouse (formerly ABB Combustion Engineering). This repair method is specifically addressed in Technical Specification 5.5.2.11.f.1.j for Unit 2.

Forty-nine tubes were plugged, and seventy-five tubes were sleeved in Steam Generator E-088 during the Cycle 12 refueling outage. A total of 773 tubes have been plugged, and to date, 252 sleeved tubes are in service. The design number of tubes is 9350 tubes and the sleeve to plug equivalency ratio is thirty-eight sleeves per plug. The effective plugging percentage for E-088 is 8.4%.

Fifty-two tubes were plugged, and forty-three tubes were sleeved in Steam Generator E-089 during the Cycle 12 refueling outage. A total of 817 tubes have been plugged, and to date, 146 sleeved tubes are in service. The design number of tubes is 9350 tubes and the sleeve to plug equivalency ratio is thirty-eight sleeves per plug. The effective plugging percentage for E-089 is 8.8%.

**Causes and Corrective Actions**

The degradation detected during this inspection remained within the Technical Specification category C-3. There is no significant update from previous reports of causes and corrective actions for Category C-3 results. Thus, this portion of a previous report is provided below.

Actions have been taken to improve the secondary side chemistry environment for steam generator tubing in both Unit 2 steam generators. These actions have been reviewed by a panel of industry experts for application at SONGS. The expert panel concurs with these measures. The actions include:

1. Chemical cleaning of the entire tube bundle (full bundle) performed during the Cycle 9 refueling outage in December 1996.

2. Addition of an inhibitor (titanium dioxide) for IGA/SCC immediately after the chemical cleaning for maximum crevice penetration potential. This is ongoing.

3. Use of Ethanolamine (ETA) for pH control of the secondary fluids. This is ongoing.

4. Boric acid addition in the secondary side to help reduce denting of the tube supports and stress corrosion cracking of tubing. This is ongoing.

In addition, SCE reduced the reactor coolant temperature at the steam generator inlet (T-hot) by about 13°F. SCE expects this will reduce stress corrosion cracking of the tubing initiating from the inside diameter of the tubing. The first phase of this change, a reduction of about 4°F, was completed in January 1998. The final phase of this change, a reduction of an additional 9°F, was completed in February 1999.

**Description of Tables and Appendices**

Table 1 - Summary of the Planned Inspection Program for the Unit 2 Cycle 12 (U2C12) Refueling Outage

Table 2 - List of Nondestructive Examination (NDE) Techniques Utilized for Each Degradation Mechanism for the U2C12 Refueling Outage

Table 3 - Number of Tubes Repaired and Active Degradation Mechanisms Found During the U2C12 Refueling Outage

Table 4 - Summary of Results of In-Situ Pressure and Leak Testing for the U2C12 Refueling Outage

Table 5 - U2C12 Refueling Outage Tubes Plugged, Steam Generator E-088

Table 6 - U2C12 Refueling Outage Tubes Sleeved, Steam Generator E-088

Table 7 - U2C12 Refueling Outage Tubes Plugged, Steam Generator E-089

Table 8 - U2C12 Refueling Outage Tubes Sleeved, Steam Generator E-089

Appendix 1 - Steam Generator Reference Information

Appendix 2 - Legend for Appendices 3 and 4

Appendix 3 - Inspection Summary, Steam Generator E-088

Appendix 4 - Inspection Summary, Steam Generator E-089

**Table 1 - Summary of the Planned Inspection Program for the Unit 2 Cycle 12 (U2C12) Refueling Outage**

| | Number of Tubes/Percentage of Tubes Steam Generator | |
|---|---|---|
| | E-088 | E-089 |
| Full length of tube with the bobbin probe (excluding sleeved regions and U-bends for Rows 1-3) | 8626 / 100% | 8585 / 100% |
| Hot leg expansion transition at the top-of-tubesheet with the Plus-Point Probe | 8446 / 100% | 8482 / 100% |
| Cold leg expansion transition at the top-of-tubesheet with the Plus-Point Probe | 2680 / 31% | 2646 / 30% |
| U-bend regions of Rows 1, 2, and 3 with both mid and high frequency Plus-Point Probes | 181/ 100% | 179 / 100% |
| Plus-Point Probe examinations of tube support intersections with dents greater than, or equal to, 2 volts | 3293 / 100% | 2097 / 100% |
| Plus-Point Probe examination of hot leg dings greater than, or equal to, 5 volts | 118 / 100% | 52 / 100% |
| Plus-Point Probe examination of all tube support intersections with quantified wear indications by the bobbin probe | 362 / 100% | 352 / 100% |
| Full length of sleeves with the Plus-Point Probe | 180 / 100% | 103 / 100% |

**Table 2 – List of Nondestructive Examination (NDE) Techniques Utilized for Each Degradation Mechanism for the U2C12 Refueling Outage**

| Indication Orientation/Location | Probe Type for Detection | Probe Type for Characterization |
|---|---|---|
| Axially oriented ID (initiated on the inside-diameter of the tubing wall) indications at tube support locations | Bobbin<br>Plus Point (Note 1) | Plus Point<br>Plus Point |
| Axially oriented OD (initiated on the outside-diameter of the tubing wall) indications at tube support locations | Bobbin<br>Plus Point (Note 1) | Plus Point<br>Plus Point |
| Axially oriented OD indications not associated with a tube support (freespan) | Bobbin | Plus Point |
| Circumferentially oriented ID indications near or below the expansion transition at the top of the hot leg tubesheet | Plus Point | Plus Point |
| Circumferentially oriented OD indications near the expansion transition at the top of the hot leg tubesheet | Plus Point | Plus Point |
| Axially oriented indications in the sludge pile region near the top of the hot leg tubesheet | Plus Point | Plus Point |
| Axially oriented ID indications near or below the expansion transition at the top of the hot leg tubesheet | Plus Point | Plus Point |
| Indications of wear at tube support locations | Bobbin | Plus Point |

Note 1: Plus-Point technique is used at dents with greater than, or equal to, two volts.

**TABLE 3 – Number of Tubes Repaired and Active Degradation Mechanisms Found During the U2C12 Refueling Outage**

| Category | Indication Orientation/Location | Steam Generator E-088 | Steam Generator E-089 |
|---|---|---|---|
| 1 | Tubes with axially oriented ID (initiated on the inside-diameter of the tubing wall) indications at tube support locations. (ID Axial @ Support) | 4 | 2 |
| 2 | Tubes with axially oriented OD (initiated on the outside-diameter of the tubing wall) indications at tube support locations. (OD Axial @ Support) | 19 | 10 |
| 3 | Tubes with axially oriented OD indications not associated with a tube support (freespan). (OD Axial @ Freespan) | 6 | 8 |
| 4 | Tubes with circumferentially oriented ID indications near the expansion transition at the top of the hot leg tubesheet. (ID Circ @ TSH) | 30 | 12 |
| 5 | Tubes with circumferentially oriented OD indications near the expansion transition at the top of the hot leg tubesheet. (OD Circ @ TSH) | 8 | 17 |
| 6 | Tubes with axially oriented OD indications in the sludge pile region near the top of the hot leg tubesheet. (OD Axial @ Sludge Pile TSH) | 6 | 8 |
| 7 | Tubes with axially oriented OD indications near the expansion transition at the top of the hot leg tubesheet. (OD Axial @ TSH) | 0 | 0 |
| 8 | Tubes with axially oriented ID indications near the expansion transition at the top of the hot leg tubesheet. (ID Axial @ TSH) | 2 | 0 |
| 9 | Tubes with axially oriented ID indications below the inlet top-of-tubesheet. (ID Axial below TSH) | 26 | 9 |
| 10 | Tubes with circumferentially oriented ID indications below the inlet top-of-tubesheet. (ID Circ below TSH) | 9 | 1 |
| 11 | Tubes with indications of wear at tube support locations. (Wear @ Support) | 14 | 23 |
| 12 | Tubes with volumetric indications. (OD Vol @ Miscellaneous) | 0 | 2 |
| 13 | Miscellaneous preventative plugging (not an active degradation mechanism). (Prevent @ Miscellaneous) | 0 | 3 |
| Total | | 124 | 95 |

## TABLE 4

## SONGS-2 IN SITU PRESSURE TEST LIST
## S/G 88 MAY-2002

| TUBE AND EDDY CURRENT INFORMATION | | | | | | | | | IN-SITU TEST RESULTS | | | |
|---|---|---|---|---|---|---|---|---|---|---|---|---|
| REGION | TUBE INFORMATION | | | PLUS POINT DATA | | | | | GPM @ NOPD | GPM @ MSLB | GPM @ NOPD POST MSLB | PRESURE 3xNOPD |
| | ROW | COL | LOCATION | LENGTH | VOLTS | Max Depth % | PDA or Avg Depth % | ORIENTATION | | | | |
| EGGCRATE | 27 | 115 | 05H + 0 01 | 0 65 | 0 31 | 93% | 34% | OD AXIAL | 0 | 0 | 0 | 5000 |

## SONGS-2 IN SITU PRESSURE TEST LIST
## S/G 89 MAY-2002

| TUBE AND EDDY CURRENT INFORMATION | | | | | | | | | IN-SITU TEST RESULTS | | | |
|---|---|---|---|---|---|---|---|---|---|---|---|---|
| REGION | TUBE INFORMATION | | | PLUS POINT DATA | | | | | GPM @ NOPD | GPM @ MSLB | GPM @ NOPD POST MSLB | PRESURE 3xNOPD |
| | ROW | COL | LOCATION | LENGTH | VOLTS | Max. Depth % | PDA or Avg Depth % | ORIENTATION | | | | |
| EGGCRATE | 13 | 119 | 06H - 0 18 | 0 18 | 0 24 | 71% | N/A | OD AXIAL | 0 | 0 | 0 | 5000 |
| LOW ROW U-BEND | 1 | 165 | DBH + 9 91 | N/A | N/A | N/A | N/A | DATA QUALITY | 0 | 0 | 0 | 5000 |

NOTES:

GPM = Gallons per Minute
NOPD = Normal Operation Pressure Differential
MSLB = Main Steam Line Break Pressure Differential
N/A = Not Applicable
OD = Degradation initiated on the outside diameter of the tubing
ID = Degradation initiated on the inside diameter of the tubing
PDA = Percent degraded area

**TABLE 5 – SONGS U2C12 Refueling Outage Tubes Plugged**
**STEAM GENERATOR E-088**

| Row | Column | Reason for Plugging Tube (per Table 3) |
|---|---|---|
| 4 | 12 | OD Axial @ Sludge Pile TSH |
| 15 | 13 | OD Axial @ Support |
| 37 | 13 | OD Axial @ Freespan |
| 80 | 24 | OD Axial @ Support |
| 84 | 24 | OD Axial @ Support |
| 78 | 26 | OD Axial @ Support |
| 85 | 27 | OD Axial @ Support |
| 88 | 30 | OD Axial @ Support |
| 90 | 40 | OD Axial @ Support |
| 21 | 49 | ID Axial @ Support |
| 18 | 58 | OD Axial @ Support |
| 13 | 61 | OD Axial @ Support |
| 33 | 69 | OD Axial @ Support |
| 145 | 73 | Wear @ Support |
| 46 | 74 | Wear @ Support |
| 46 | 78 | Wear @ Support |
| 51 | 79 | Wear @ Support |
| 53 | 81 | Wear @ Support |
| 55 | 85 | ID Axial below TSH |
| 147 | 85 | Wear @ Support |
| 56 | 86 | Wear @ Support |
| 143 | 87 | OD Axial @ Support |
| 56 | 88 | ID Axial below TSH |
| 147 | 89 | Wear @ Support |
| 54 | 90 | Wear @ Support |
| 56 | 90 | Wear @ Support |
| 145 | 91 | Wear @ Support |
| 47 | 99 | Wear @ Support |
| 44 | 100 | Wear @ Support |
| 39 | 101 | Wear @ Support |
| 54 | 108 | OD Axial @ Freespan |
| 31 | 109 | ID Axial @ Support |

**TABLE 5 (CONT.) – SONGS U2C12 Refueling Outage Tubes Plugged**
**STEAM GENERATOR E-088**

| Row | Column | Reason for Plugging Tube (per Table 3) |
|---|---|---|
| 133 | 109 | OD Axial @ Freespan |
| 28 | 112 | OD Axial @ Support |
| 27 | 115 | OD Axial @ Support |
| 29 | 115 | OD Axial @ Support |
| 22 | 116 | ID Axial @ Support |
| 18 | 118 | ID Axial @ Support |
| 37 | 119 | ID Axial below TSH |
| 10 | 120 | ID Circ below TSH |
| 18 | 124 | OD Axial @ Freespan |
| 87 | 133 | OD Axial @ Support |
| 105 | 133 | OD Axial @ Support |
| 21 | 159 | OD Axial @ Support |
| 4 | 162 | ID Axial below TSH |
| 32 | 164 | OD Axial @ Support |
| 22 | 166 | OD Axial @ Freespan |
| 22 | 168 | OD Axial @ Freespan |
| 24 | 170 | OD Axial @ Support |

**TABLE 6 – SONGS U2C12 Refueling Outage Tubes Sleeved**
**STEAM GENERATOR E-088**

| Row | Column | Reason for Sleeving Tube (per Table 3) |
|---|---|---|
| 17 | 27 | ID Axial below TSH |
| 17 | 35 | ID Circ @TSH |
| 8 | 36 | ID Circ below TSH |
| 18 | 36 | ID Circ @ TSH |
| 19 | 39 | ID Circ @ TSH |
| 16 | 44 | ID Circ @ TSH |
| 6 | 46 | ID Circ below TSH |
| 24 | 48 | ID Circ below TSH |
| 25 | 49 | ID Circ @ TSH |
| 45 | 55 | OD Circ @ TSH |
| 48 | 58 | ID Circ below TSH |
| 90 | 58 | ID Circ @ TSH |
| 17 | 61 | ID Axial below TSH |
| 12 | 62 | ID Circ below TSH |
| 62 | 62 | ID Circ @ TSH |
| 54 | 64 | ID Axial below TSH |
| 49 | 65 | OD Axial @ Sludge Pile TSH |
| 30 | 68 | ID Axial @ TSH |
| 36 | 68 | ID Circ below TSH |
| 37 | 69 | ID Axial below TSH |
| 65 | 69 | ID Circ @ TSH |
| 30 | 70 | ID Axial @ TSH |
| 68 | 70 | ID Circ @ TSH |
| 49 | 71 | ID Axial below TSH |
| 46 | 72 | ID Axial below TSH |
| 62 | 72 | ID Circ @ TSH |
| 82 | 72 | ID Circ @ TSH |
| 54 | 74 | ID Axial below TSH |
| 68 | 74 | ID Circ @ TSH |
| 44 | 76 | ID Axial below TSH |
| 67 | 83 | OD Axial @ Sludge Pile TSH |
| 86 | 86 | OD Circ @ TSH |

**TABLE 6 (CONT.) – SONGS U2C12 Refueling Outage Tubes Sleeved**
**STEAM GENERATOR E-088**

| Row | Column | Reason for Sleeving Tube (per Table 3) |
|---|---|---|
| 58 | 88 | ID Axial below TSH |
| 82 | 88 | ID Circ @ TSH |
| 71 | 89 | OD Axial @ Sludge Pile TSH |
| 68 | 90 | OD Axial @ Sludge Pile TSH |
| 56 | 92 | ID Axial below TSH |
| 77 | 93 | OD Circ @ TSH |
| 77 | 97 | OD Circ @ TSH |
| 81 | 97 | ID Circ @ TSH |
| 97 | 97 | ID Circ @ TSH |
| 64 | 98 | OD Axial @ Sludge Pile TSH |
| 74 | 100 | OD Circ @ TSH |
| 68 | 102 | ID Circ @ TSH |
| 41 | 103 | ID Axial below TSH |
| 61 | 103 | ID Circ @ TSH |
| 79 | 103 | ID Circ @ TSH |
| 52 | 104 | ID Axial below TSH |
| 51 | 105 | ID Axial below TSH |
| 36 | 106 | ID Axial below TSH |
| 72 | 106 | ID Circ @ TSH |
| 36 | 108 | ID Axial below TSH |
| 114 | 108 | OD Circ @ TSH |
| 49 | 109 | ID Axial below TSH |
| 67 | 109 | OD Circ @ TSH |
| 51 | 111 | ID Axial below TSH |
| 57 | 111 | ID Axial below TSH |
| 83 | 111 | ID Circ @ TSH |
| 22 | 112 | ID Axial below TSH |
| 23 | 113 | ID Axial below TSH |
| 65 | 113 | ID Circ @ TSH |
| 28 | 114 | ID Axial below TSH |
| 46 | 116 | ID Circ @ TSH |
| 55 | 117 | OD Circ @ TSH |
| 25 | 119 | ID Circ below TSH |

**TABLE 6 (CONT.) – SONGS U2C12 Refueling Outage Tubes Sleeved**
**STEAM GENERATOR E-088**

| Row | Column | Reason for Sleeving Tube (per Table 3) |
|---|---|---|
| 65 | 119 | ID Circ @ TSH |
| 27 | 121 | ID Circ @ TSH |
| 39 | 121 | ID Circ @ TSH |
| 65 | 121 | ID Circ @ TSH |
| 34 | 122 | ID Axial below TSH |
| 47 | 123 | ID Circ @ TSH |
| 18 | 126 | ID Circ @ TSH |
| 58 | 134 | ID Circ @ TSH |
| 15 | 135 | ID Circ below TSH |
| 12 | 138 | ID Circ @ TSH |

**TABLE 7 – SONGS U2C12 Refueling Outage Tubes Plugged**
**STEAM GENERATOR E-089**

| Row | Column | Reason for Plugging Tube (per Table 3) |
|---|---|---|
| 18 | 16 | OD Axial @ Support |
| 93 | 23 | Wear @ Support |
| 67 | 31 | OD Axial @ Support |
| 9 | 33 | ID Axial @ Support |
| 95 | 33 | OD Axial @ Support |
| 93 | 35 | OD Axial @ Freespan |
| 110 | 36 | OD Axial @ Freespan |
| 102 | 38 | OD Axial @ Support |
| 106 | 40 | OD Axial @ Freespan |
| 114 | 46 | OD Axial @ Support |
| 38 | 52 | OD Axial @ Freespan |
| 34 | 54 | ID Axial @ Support |
| 121 | 77 | OD Axial @ Support |
| 65 | 79 | OD Axial @ Sludge Pile TSH |
| 55 | 81 | Wear @ Support |
| 147 | 81 | Wear @ Support |
| 54 | 82 | Wear @ Support |
| 55 | 83 | Wear @ Support |
| 75 | 85 | Wear @ Support |
| 61 | 87 | OD Circ @TSH |
| 56 | 88 | Wear @ Support |
| 58 | 88 | Wear @ Support |
| 56 | 90 | Wear @ Support |
| 62 | 90 | OD Circ @ TSH |
| 145 | 91 | Wear @ Support |
| 52 | 92 | Wear @ Support |
| 54 | 92 | Wear @ Support |
| 55 | 95 | Wear @ Support |
| 71 | 97 | Wear @ Support |
| 48 | 98 | Wear @ Support |
| 50 | 98 | Wear @ Support |
| 45 | 99 | Wear @ Support |
| 51 | 99 | Wear @ Support |
| 38 | 102 | Wear @ Support |
| 35 | 105 | ID Axial below TSH |

**TABLE 7 (CONT.) – SONGS U2C12 Refueling Outage Tubes Plugged**
**STEAM GENERATOR E-089**

| Row | Column | Reason for Plugging Tube (per Table 3) |
|---|---|---|
| 73 | 105 | Wear @ Support |
| 44 | 108 | Wear @ Support |
| 68 | 112 | OD Axial @ Freespan |
| 13 | 119 | OD Axial @ Support |
| 4 | 120 | OD Axial @ Support |
| 19 | 121 | OD Axial @ Support |
| 79 | 121 | Wear @ Support |
| 22 | 126 | OD Axial @ Freespan |
| 120 | 128 | OD Axial @ Freespan |
| 2 | 154 | OD Vol @ Miscellaneous |
| 2 | 158 | OD Vol @ Miscellaneous |
| 74 | 160 | Wear @ Support |
| 38 | 164 | OD Axial @ Support |
| 1 | 165 | Prevent @ Miscellaneous |
| 3 | 165 | Prevent @ Miscellaneous |
| 1 | 173 | Prevent @ Miscellaneous |
| 14 | 174 | OD Axial @ Freespan |

**TABLE 8 – SONGS U2C12 Refueling Outage Tubes Sleeved**
**STEAM GENERATOR E-089**

| Row | Column | Reason for Sleeving Tube (per Table 3) |
|---|---|---|
| 39 | 37 | ID Circ @ TSH |
| 16 | 42 | ID Circ @ TSH |
| 47 | 45 | ID Axial below TSH |
| 100 | 46 | OD Circ @ TSH |
| 24 | 48 | ID Circ @ TSH |
| 29 | 49 | OD Circ @ TSH |
| 47 | 49 | OD Circ @ TSH |
| 50 | 52 | OD Circ @ TSH |
| 39 | 53 | OD Axial @ Sludge Pile TSH |
| 24 | 54 | OD Circ @ TSH |
| 30 | 54 | OD Circ @ TSH |
| 44 | 54 | OD Axial @ Sludge Pile TSH |
| 22 | 60 | ID Axial below TSH |
| 71 | 63 | ID Circ @ TSH |
| 31 | 65 | OD Axial @ Sludge Pile TSH |
| 22 | 66 | ID Axial below TSH |
| 70 | 66 | ID Circ @ TSH |
| 55 | 69 | OD Axial @ Sludge Pile TSH |
| 57 | 69 | OD Axial @ Sludge Pile TSH |
| 74 | 72 | OD Circ @ TSH |
| 114 | 76 | OD Circ @ TSH |
| 57 | 81 | OD Axial @ Sludge Pile TSH |
| 65 | 81 | OD Axial @ Sludge Pile TSH |
| 86 | 82 | ID Circ @ TSH |
| 63 | 91 | ID Axial below TSH |
| 61 | 93 | OD Circ @ TSH |
| 85 | 93 | ID Circ @ TSH |
| 84 | 96 | ID Circ @ TSH |
| 59 | 99 | OD Circ @ TSH |
| 41 | 103 | ID Axial below TSH |
| 57 | 105 | ID Circ @ TSH |
| 75 | 105 | OD Circ @ TSH |
| 37 | 107 | ID Axial below TSH |
| 24 | 112 | OD Circ @ TSH |
| 25 | 115 | OD Circ @ TSH |
| 29 | 115 | ID Axial below TSH |

**TABLE 8 (CONT.) – SONGS U2C12 Refueling Outage Tubes Sleeved**
**STEAM GENERATOR E-089**

| Row | Column | Reason for Sleeving Tube (per Table 3) |
|---|---|---|
| 93 | 115 | ID Axial below TSH |
| 26 | 118 | OD Circ @ TSH |
| 28 | 118 | OD Circ @ TSH |
| 85 | 119 | ID Circ @ TSH |
| 85 | 123 | ID Circ @ TSH |
| 13 | 139 | ID Circ below TSH |
| 11 | 141 | ID Circ @ TSH |

# Appendix 1

## Steam Generator Reference Information

**Steam Generator**
**CE Model 3410 Tube Support Drawing**

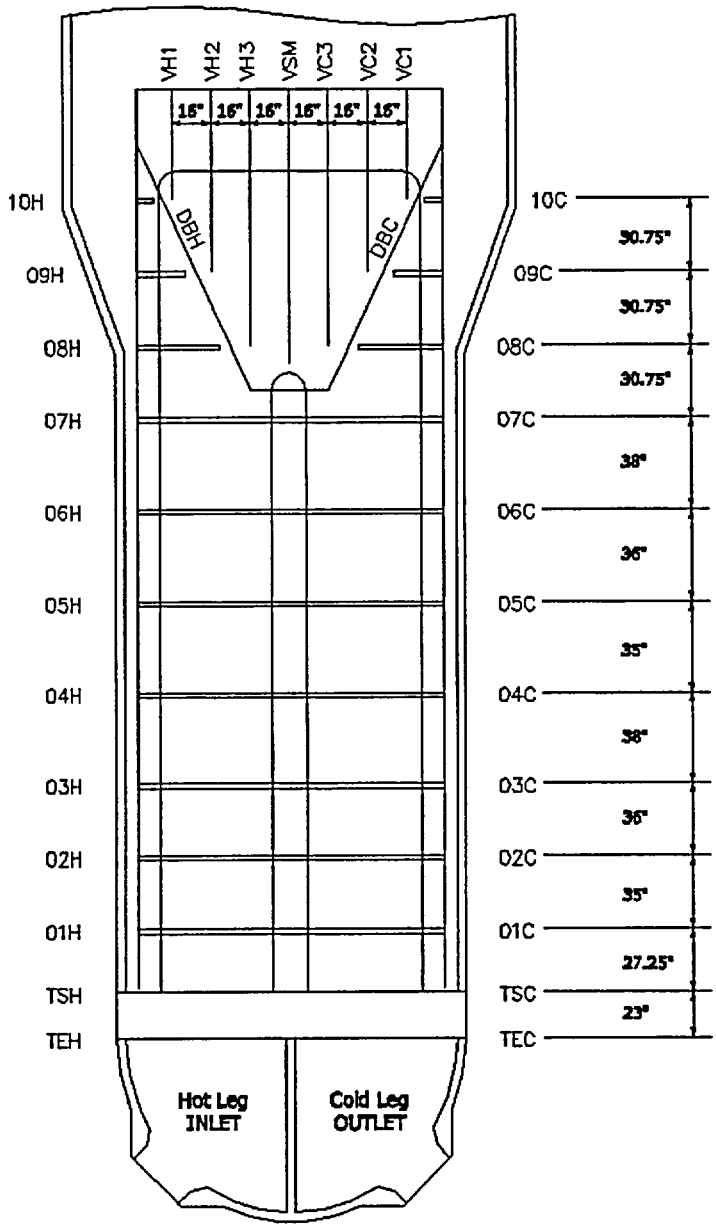

# STEAM GENERATOR TUBE SUPPORT INTERSECTIONS ABOVE THE 7TH (FULL) EGGCRATE SUPPORT

| SUPPORT INTERSECTIONS | | | | | | | | | | | | | | | |
|---|---|---|---|---|---|---|---|---|---|---|---|---|---|---|---|
| ROW | STRUCTURES | | | | | | | | | | | | | | |
| 122-147 | 08H | 09H | 10H | DBH | VH1 | VH2 | VH3 | VSM | VC3 | VC2 | VC1 | DBC | 10C | 09C | 08C |
| 120-121* | 08H | 09H | 10H | DBH | VH1 | VH2 | VH3 | VSM | VC3 | VC2 | VC1 | DBC | 10C | 09C | 08C |
| 115-119 | 08H | 09H | | DBH | VH1 | VH2 | VH3 | VSM | VC3 | VC2 | VC1 | DBC | | 09C | 08C |
| 86-114 | 08H | 09H | | DBH | | VH2 | VH3 | VSM | VC3 | VC2 | | DBC | | 09C | 08C |
| 84-85* | 08H | 09H | | DBH | | VH2 | VH3 | VSM | VC3 | VC2 | | DBC | | 09C | 08C |
| 83 | 08H | | | DBH | | VH2 | VH3 | VSM | VC3 | VC2 | | DBC | | | 08C |
| 51-82 | 08H | | | DBH | | | VH3 | VSM | VC3 | | | DBC | | | 08C |
| 49-50* | 08H | | | DBH | | | | VSM | | | | DBC | | | 08C |
| 19-48 | | | | DBH | | | | VSM | | | | DBC | | | |
| 1-18 | | | | DBH | | | | | | | | DBC | | | |

* Indicates those rows adjacent to scallop bars

## SOUTHERN CALIFORNIA EDISON, SAN ONOFRE

## CE MODEL 3410 STEAM GENERATOR

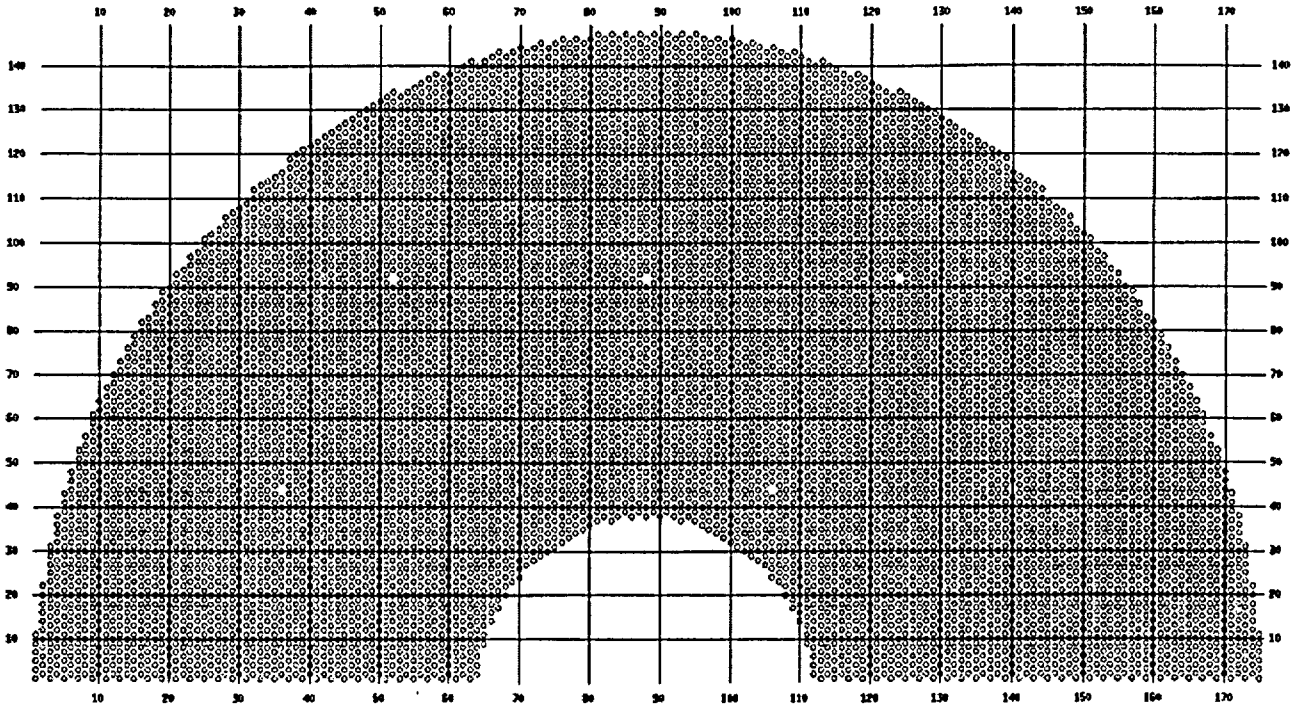

# Appendix 2

## Legend for Appendices 3 and 4

## List of Abbreviations and Format Used to Describe Indications from Rotating Probe Testing

| "I-Code" Abbreviations | Explanation of the Abbreviations |
|---|---|
| SCI | Single Circumferential Indication |
| MCI | Multiple Circumferential Indications |
| SAI | Single Axial Indication |
| MAI | Multiple Axial Indications |
| MMI | Mixed Mode Indications |
| SVI | Single Volumetric Indication (i.e. no special axial or circumferential aspect) |
| MVI | Multiple Volumetric Indications (i.e. no special axial or circumferential aspect) |

### Format

In Appendices 3 and 4, a single line of data is associated with each individual rotating probe indication. Below is a descriptive example of the format.

| ROW | COL | VOLTS | DEG | CHN | IND | %TW | LOCATION | EXT | EXT | UTIL 1 | UTIL 2 |
|---|---|---|---|---|---|---|---|---|---|---|---|
| 4 | 12 | +P VOLTS | +P DEG | CH# | CODE | % | LOCATION | EXT | EXT | PAN VOLTS | +P LEN |

1. All "I-Code" indications require a single line entry. The example above displays the form of a Resolution Report line. The VOLTS field contains the Plus-Point P-to-P voltage of the largest, most representative response. The DEG field contains the corresponding phase angle. The CHN field contains the reporting channel (i.e. the appropriate 300kHz Plus-Point channel). The IND field contains the appropriate 3-letter code (see list above). The %TW field indicates the percent wall loss for wear indications. The LOCATION field contains the abbreviation for the referenced landmark and the (FROM-TO) distance for the indication. The EXT fields contain the landmarks of the beginning and end of the test extent. The UTIL 1 field contains the 300kHz pancake P-to-P voltage of the largest, most representative response. The UTIL 2 field contains the measured Plus-Point length of the indications. Exceptions to this general guidance is provided in paragraphs 2 and 3 below.

2. For axial indications of extended length, the location should be ranged (FROM-TO) in the LOCATION field. If the range of such an indication includes any part of a support structure, it should be references from that landmark.

3. For "I-Code" indications which have both axial and circumferential extent (i.e. SVI, MVI, and MMI) the location should be ranged in the LOCATION field (as above) and the UTIL 2 field should contain the circumferential length.

# Appendix 3

## Inspection Summary

## Steam Generator E-088

SG88 - MAI, MCI, MMI, MVI, SAI, SCI, SVI, 0-100%TWD

QUERY: QueryM1

| ROW | LINE | VOLTS | DEG | CHN | IND | %TW | LOCATION | | | EXT | EXT | UTIL 1 | UTIL 2 | CAL # | LEG | PROBE |
|---|---|---|---|---|---|---|---|---|---|---|---|---|---|---|---|---|
| 4 | 12 | 0.23 | 104 | 2 | SAI | | TSH | +3.51 | | TSH | TSH | 0.21 | 0.12 | 47 | HOT | 600PP |
| 4 | 162 | 3.04 | 26 | 4 | SAI | | TSH | -7.10 | | TSH | TSH | 5.60 | 0.24 | 180 | HOT | 580PP |
| 6 | 46 | 0.46 | 22 | P 1 | SCI | | TSH | -4.32 | | TSH | TSH | 0.84 | 0.20 | 33 | HOT | 600PP |
| 8 | 36 | 0.45 | 21 | P 1 | SCI | | TSH | -5.27 | | TSH | TSH | 0.21 | 0.22 | 36 | HOT | 600PP |
| 10 | 120 | 1.75 | 41 | P 1 | SCI | | TSH | -7.86 | | TSH | TSH | 3.94 | 0.22 | 182 | HOT | 580PP |
| | | 1.16 | 26 | 4 | MVI | | TSH | -9.17 | TO-8.97 | TSH | TSH | 1.55 | 0.69 | 182 | HOT | 580PP |
| | | 0.46 | 51 | P 1 | MCI | | TSH | -7.43 | TO-6.62 | TSH | TSH | 3.13 | 0.46 | 182 | HOT | 580PP |
| 10 | 126 | 0.22 | 35 | P 2 | TWD | 11 | 05H | +0.76 | | TEC | TEH | LAR | | 13 | HOT | 600UL |
| 12 | 62 | 0.34 | 21 | P 1 | SCI | | TSH | -1.77 | | TSH | TSH | 0.13 | 0.19 | 58 | HOT | 600PP |
| 12 | 138 | 0.27 | 25 | P 1 | SCI | | TSH | -0.02 | | TSH | TSH | 0.22 | 0.35 | 46 | HOT | 600PP |
| 13 | 9 | 0.61 | 81 | P 2 | TWD | 24 | 05H | -0.10 | | TEH | TEC | | | 46 | COLD | 600UL |
| 13 | 61 | 0.39 | 115 | 2 | SAI | | 06H | +0.49 | | 06H | 06H | 1.34 | 0.27 | 115 | HOT | 580PP |
| 15 | 13 | 0.29 | 98 | 2 | SAI | | 06H | +0.30 | | 06H | 06H | 0.18 | 0.53 | 123 | HOT | 580PP |
| 15 | 135 | 0.42 | 19 | P 1 | SCI | | TSH | -2.66 | | TSH | TSH | 0.28 | 0.16 | 41 | HOT | 600PP |
| 16 | 20 | 0.28 | 128 | P 2 | TWD | 12 | DBC | +1.25 | | TEH | TEC | | | 49 | COLD | 600UL |
| 16 | 44 | 0.27 | 22 | P 1 | SCI | | TSH | -0.09 | | TSH | TSH | 0.00 | 0.19 | 32 | HOT | 600PP |
| 17 | 27 | 0.55 | 11 | 2 | SAI | | TSH | -2.82 | | TSH | TSH | 0.51 | 0.19 | 39 | HOT | 600PP |
| 17 | 35 | 0.44 | 17 | P 1 | SCI | | TSH | -0.09 | | TSH | TSH | 0.16 | 0.19 | 36 | HOT | 600PP |
| 17 | 61 | 1.01 | 20 | 2 | SAI | | TSH | -1.11 | | TSH | TSH | 0.65 | 0.18 | 53 | HOT | 600PP |
| 18 | 36 | 0.72 | 22 | P 1 | SCI | | TSH | -0.08 | | TSH | TSH | 0.49 | 0.19 | 37 | HOT | 600PP |
| 18 | 44 | 0.25 | 92 | P 2 | TWD | 8 | DBH | -1.75 | | TEH | TEC | | | 1 | COLD | 600UL |
| 18 | 58 | 0.69 | 43 | 2 | SAI | | 07H | -0.11 | | 07H | 07H | 0.56 | 0.11 | 188 | HOT | 520PP |
| 18 | 118 | 0.49 | 7 | 2 | SAI | | 06H | +0.26 | | 06H | 06H | 0.00 | 0.26 | 138 | HOT | 580PP |
| 18 | 124 | 0.15 | 91 | 2 | SAI | | 01H | +8.39 | | 01H | 01H | 0.00 | 0.39 | 135 | HOT | 580PP |
| 18 | 126 | 0.38 | 24 | P 1 | SCI | | TSH | -0.12 | | TSH | TSH | 0.69 | 0.22 | 76 | HOT | 600PP |
| 19 | 39 | 0.29 | 25 | P 1 | SCI | | TSH | -0.11 | | TSH | TSH | 0.17 | 0.21 | 37 | HOT | 600PP |
| 21 | 49 | 1.07 | 16 | 2 | SAI | | 07H | -0.52 | | 07H | 07H | 0.00 | 0.20 | 107 | HOT | 580PP |
| 21 | 159 | 0.28 | 93 | 2 | SAI | | 06H | +0.87 | | 06H | 06H | 0.71 | 0.18 | 111 | HOT | 580PP |
| | | 0.43 | 134 | P 2 | TWD | 16 | 06H | +0.87 | | TEH | TEC | | | 30 | COLD | 600UL |
| 22 | 112 | 0.53 | 14 | 2 | SAI | | TSH | -0.58 | | TSH | TSH | 0.47 | 0.18 | 68 | HOT | 600PP |
| 22 | 116 | 0.65 | 13 | 2 | SAI | | 06H | +0.02 | | 06H | 06H | 0.00 | 0.18 | 138 | HOT | 580PP |
| 22 | 166 | 0.09 | 124 | 2 | SAI | | 06H | +4.48 | | 06H | 06H | 0.00 | 0.32 | 105 | HOT | 580PP |
| | | 0.14 | 114 | 2 | SAI | | 06H | +7.50 | | 06H | 06H | 0.19 | 0.67 | 105 | HOT | 580PP |
| | | 0.07 | 74 | 2 | SAI | | 06H | +10.97 | | 06H | 06H | 0.00 | 0.45 | 105 | HOT | 580PP |
| | | 0.11 | 126 | 2 | SAI | | 06H | +17.60 | | 06H | 06H | 0.00 | 0.48 | 105 | HOT | 580PP |
| 22 | 168 | 0.14 | 119 | 2 | SAI | | 06H | +13.00 | | 06H | 06H | 0.00 | 0.27 | 105 | HOT | 580PP |
| 23 | 109 | 0.33 | 116 | P 2 | TWD | 14 | VSM | +0.76 | | TEC | TEH | | | 19 | HOT | 600UL |
| 23 | 113 | 0.61 | 18 | 2 | SAI | | TSH | -1.16 | | TSH | TSH | 1.22 | 0.16 | 67 | HOT | 600PP |
| | | 0.64 | 14 | 2 | SAI | | TSH | -0.51 | | TSH | TSH | 1.21 | 0.16 | 67 | HOT | 600PP |
| 24 | 14 | 0.33 | 66 | P 2 | TWD | 13 | VSM | +0.88 | | TEH | TEC | | | 49 | COLD | 600UL |
| 24 | 48 | 0.47 | 21 | P 1 | SCI | | TSH | -2.07 | | TSH | TSH | 0.58 | 0.16 | 48 | HOT | 600PP |

SG88 - MAI, MCI, MMI, MVI, SAI, SCI, SVI, 0-100%TWD

QUERY: QueryM1

| ROW | LINE | VOLTS | DEG | CHN | IND | %TW | LOCATION | | EXT | EXT | UTIL 1 | UTIL 2 | CAL # | LEG | PROBE |
|---|---|---|---|---|---|---|---|---|---|---|---|---|---|---|---|
| 24 | 170 | 0.19 | 117 | 2 | SAI | | 02H | +0.33 | 02H | 02H | 0.59 | 0.24 | 106 | HOT | 580PP |
| | | 0.20 | 104 | 2 | SAI | | 06H | -0.33 | 06H | 06H | 0.00 | 0.13 | 106 | HOT | 580PP |
| | | 0.20 | 133 | 2 | SAI | | 06H | -0.12 | 06H | 06H | 0.00 | 0.16 | 106 | HOT | 580PP |
| | | 0.24 | 141 | 2 | SAI | | 06H | +0.12 | 06H | 06H | 0.00 | 0.16 | 106 | HOT | 580PP |
| 25 | 49 | 0.42 | 14 | P 1 | SCI | | TSH | -0.05 | TSH | TSH | 0.27 | 0.14 | 47 | HOT | 600PP |
| 25 | 119 | 0.56 | 23 | P 1 | MCI | | TSH | -0.21 | TSH | TSH | 0.32 | 0.24 | 71 | HOT | 580PP |
| 27 | 115 | 0.31 | 125 | 2 | SAI | | 05H | +0.01 | 05H | 05H | 0.00 | 0.35 | 143 | HOT | 580PP |
| | | 0.17 | 94 | 2 | SAI | | 05H | -0.48 | 05H | 05H | 0.00 | 0.22 | 143 | HOT | 580PP |
| 27 | 121 | 0.23 | 16 | P 1 | SCI | | TSH | -0.04 | TSH | TSH | 0.31 | 0.18 | 174 | HOT | 580PP |
| 27 | 173 | 0.40 | 134 | P 2 | TWD | 18 | 04H | +0.86 | TEH | TEC | | | 36 | COLD | 600UL |
| 28 | 112 | 0.43 | 98 | P 2 | TWD | 15 | 07H | +0.80 | TEC | TEH | | | 20 | HOT | 600UL |
| | | 0.25 | 101 | 2 | SAI | | 07H | +0.81 | 07H | 07H | 0.00 | 0.14 | 142 | HOT | 580PP |
| 28 | 114 | 0.44 | 17 | 2 | SAI | | TSH | -3.43 | TSH | TSH | 0.54 | 0.25 | 71 | HOT | 580PP |
| 29 | 115 | 0.26 | 134 | 2 | SAI | | 05H | -0.07 | 05H | 05H | 0.00 | 0.57 | 142 | HOT | 580PP |
| 30 | 68 | 0.63 | 15 | 2 | SAI | | TSH | -0.09 | TSH | TSH | 0.73 | 0.25 | 58 | HOT | 600PP |
| 30 | 70 | 0.62 | 18 | 2 | SAI | | TSH | -0.03 | TSH | TSH | 0.33 | 0.17 | 58 | HOT | 600PP |
| 31 | 11 | 0.47 | 115 | P 2 | TWD | 20 | DBH | +1.35 | TEH | TEC | | | 46 | COLD | 600UL |
| 31 | 109 | 0.85 | 18 | 2 | SAI | | 06H | -0.53 | 06H | 06H | 0.00 | 0.24 | 142 | HOT | 580PP |
| 32 | 60 | 0.34 | 49 | P 2 | TWD | 13 | VSM | -0.86 | TEC | TEH | | | 15 | HOT | 600UL |
| 32 | 164 | 0.22 | 95 | 2 | SAI | | 06H | +0.37 | 06H | 06H | 0.64 | 0.33 | 111 | HOT | 580PP |
| 33 | 69 | 0.30 | 111 | 2 | SAI | | 07H | -0.12 | 07H | 07H | 0.00 | 0.19 | 188 | HOT | 520PP |
| 33 | 71 | 0.46 | 92 | P 2 | TWD | 16 | DBC | -1.68 | TSC | TEH | | | 31 | HOT | 600UL |
| 34 | 72 | 0.59 | 23 | P 2 | TWD | 20 | DBC | +2.02 | TEC | TEH | | | 30 | HOT | 600UL |
| 34 | 116 | 0.24 | 75 | P 2 | TWD | 11 | VSM | -0.87 | TEC | TEH | | | 19 | HOT | 600UL |
| 34 | 122 | 0.86 | 18 | 2 | SAI | | TSH | -4.50 | TSH | TSH | 0.79 | 0.18 | 71 | HOT | 580PP |
| 35 | 25 | 0.61 | 132 | P 2 | TWD | 21 | VSM | -0.73 | TEH | TEC | | | 50 | COLD | 600UL |
| 35 | 59 | 0.64 | 83 | P 2 | TWD | 22 | VSM | +0.63 | TEC | TEH | | | 15 | HOT | 600UL |
| 36 | 58 | 0.53 | 155 | P 2 | TWD | 19 | VSM | +0.80 | TEC | TEH | | | 15 | HOT | 600UL |
| 36 | 68 | 0.45 | 18 | P 1 | SCI | | TSH | -1.26 | TSH | TSH | 0.00 | 0.21 | 58 | HOT | 600PP |
| 36 | 102 | 0.96 | 82 | P 2 | TWD | 29 | DBC | +1.92 | TSC | TEH | | | 34 | HOT | 600UL |
| 36 | 104 | 0.94 | 106 | P 2 | TWD | 27 | DBH | -1.69 | STH | TEC | | | 42 | COLD | 600UL |
| 36 | 106 | 0.31 | 16 | 2 | SAI | | TSH | -1.11 | TSH | TSH | 0.95 | 0.16 | 67 | HOT | 600PP |
| 36 | 108 | 0.96 | 22 | 2 | SAI | | TSH | -3.98 | TSH | TSH | 1.30 | 0.16 | 67 | HOT | 600PP |
| 36 | 110 | 0.34 | 148 | P 2 | TWD | 15 | VSM | +0.66 | TEC | TEH | | | 19 | HOT | 600UL |
| 37 | 13 | 0.19 | 92 | 2 | SAI | | 06H | +2.03 | 06H | 06H | 0.22 | 0.17 | 123 | HOT | 580PP |
| 37 | 47 | 0.43 | 134 | P 2 | TWD | 15 | VSM | +0.91 | TEC | TEH | | | 12 | HOT | 600UL |
| 37 | 61 | 0.66 | 121 | P 2 | TWD | 22 | VSM | +0.63 | TEC | TEH | | | 15 | HOT | 600UL |
| 37 | 69 | 0.99 | 16 | 2 | MAI | | TSH | -1.28 | TSH | TSH | 0.66 | 0.17 | 57 | HOT | 600PP |
| 37 | 119 | 1.90 | 23 | 4 | SAI | | TEH | +9.99 | TEH | TEH | 3.39 | 0.46 | 175 | HOT | 580PP |
| 38 | 74 | 0.67 | 21 | P 2 | TWD | 22 | DBC | +1.87 | TEC | TEH | | | 30 | HOT | 600UL |

SG88 - MAI, MCI, MMI, MVI, SAI, SCI, SVI, 0-100%TWD

QUERY: QueryM1

| ROW | LINE | VOLTS | DEG | CHN | IND | %TW | LOCATION | | EXT | EXT | UTIL 1 | UTIL 2 | CAL # | LEG | PROBE |
|---|---|---|---|---|---|---|---|---|---|---|---|---|---|---|---|
| 38 | 102 | 0.34 | 109 | P 2 | TWD | 13 | DBC | +1.59 | TSC | TEH | | | 34 | HOT | 600UL |
| | | 0.81 | 123 | P 2 | TWD | 26 | DBC | +1.93 | TSC | TEH | | | 34 | HOT | 600UL |
| 39 | 13 | 0.33 | 132 | P 2 | TWD | 15 | VSM | +0.19 | TEH | TEC | | | 46 | COLD | 600UL |
| 39 | 101 | 0.99 | 126 | P 2 | TWD | 30 | DBC | +1.97 | TEC | TEH | | | 34 | HOT | 600UL |
| 39 | 103 | 0.43 | 80 | P 2 | TWD | 14 | DBC | +1.80 | STH | TEC | | | 42 | COLD | 600UL |
| 39 | 121 | 0.23 | 23 | P 1 | SCI | | TSH | -0.14 | TSH | TSH | 0.51 | 0.19 | 72 | HOT | 600PP |
| 39 | 127 | 0.36 | 61 | P 2 | TWD | 17 | VSM | -0.88 | TEC | TEH | | | 13 | HOT | 600UL |
| 40 | 122 | 0.49 | 65 | P 2 | TWD | 17 | VSM | -0.85 | TEC | TEH | | | 14 | HOT | 600UL |
| 41 | 73 | 0.31 | 92 | P 2 | TWD | 11 | VSM | +0.89 | TEC | TEH | | | 31 | HOT | 600UL |
| 41 | 101 | 0.35 | 130 | P 2 | TWD | 13 | VSM | -0.81 | TEC | TEH | | | 35 | HOT | 600UL |
| 41 | 103 | 0.22 | 15 | 2 | SAI | | TSH | -0.44 | TSH | TSH | 0.56 | 0.17 | 59 | HOT | 600PP |
| 41 | 113 | 0.40 | 71 | P 2 | TWD | 17 | VSM | -0.91 | TEC | TEH | | | 26 | HOT | 600UL |
| 42 | 74 | 0.42 | 107 | P 2 | TWD | 15 | DBC | +1.86 | TEC | TEH | | | 31 | HOT | 600UL |
| 42 | 106 | 0.48 | 107 | P 2 | TWD | 18 | VSM | -0.83 | TSC | TEH | | | 34 | HOT | 600UL |
| 43 | 19 | 0.60 | 128 | P 2 | TWD | 21 | 02H | +0.85 | TEH | TEC | | | 48 | COLD | 600UL |
| 43 | 51 | 0.95 | 122 | P 2 | TWD | 27 | VSM | +0.82 | TEC | TEH | | | 12 | HOT | 600UL |
| 43 | 75 | 0.62 | 126 | P 2 | TWD | 20 | DBC | +1.99 | TEC | TEH | | | 31 | HOT | 600UL |
| | | 0.81 | 114 | P 2 | TWD | 24 | VSM | +0.86 | TEC | TEH | | | 31 | HOT | 600UL |
| 43 | 101 | 0.30 | 108 | P 2 | TWD | 11 | DBC | -1.63 | TEC | TEH | | | 34 | HOT | 600UL |
| 43 | 125 | 0.37 | 112 | P 2 | TWD | 17 | VSM | -0.83 | TEC | TEH | | | 13 | HOT | 600UL |
| 44 | 58 | 0.48 | 118 | P 2 | TWD | 18 | VSM | +0.84 | TEC | TEH | | | 15 | HOT | 600UL |
| 44 | 76 | 0.49 | 13 | 2 | SAI | | TSH | -0.90 | TSH | TSH | 0.62 | 0.32 | 69 | HOT | 600PP |
| | | 0.35 | 14 | 2 | SAI | | TSH | -1.81 | TSH | TSH | 0.23 | 0.12 | 69 | HOT | 600PP |
| | | 0.35 | 10 | 2 | SAI | | TSH | -2.06 | TSH | TSH | 0.56 | 0.29 | 69 | HOT | 600PP |
| 44 | 98 | 0.51 | 109 | P 2 | TWD | 16 | 01H | -0.30 | TEC | TEH | | | 35 | HOT | 600UL |
| 44 | 100 | 0.33 | 119 | P 2 | TWD | 13 | DBC | -1.51 | TEC | TEH | | | 34 | HOT | 600UL |
| | | 1.40 | 169 | P 2 | TWD | 36 | DBC | +1.82 | TEC | TEH | | | 34 | HOT | 600UL |
| 44 | 124 | 0.33 | 47 | P 2 | TWD | 12 | VSM | -0.97 | TEC | TEH | | | 14 | HOT | 600UL |
| 45 | 55 | 0.37 | 125 | P 1 | SCI | | TSH | +0.07 | TSH | TSH | 0.00 | 0.57 | 54 | HOT | 600PP |
| 45 | 73 | 0.41 | 130 | P 2 | TWD | 13 | DBC | -1.61 | STH | TEC | | | 40 | COLD | 600UL |
| 45 | 75 | 0.85 | 112 | P 2 | TWD | 25 | DBC | +1.95 | TEC | TEH | | | 30 | HOT | 600UL |
| | | 0.87 | 106 | P 2 | TWD | 26 | DBH | -1.76 | TEC | TEH | | | 30 | HOT | 600UL |
| 46 | 72 | 0.39 | 25 | 2 | SAI | | TSH | -1.37 | TSH | TSH | 0.71 | 0.16 | 67 | HOT | 600PP |
| 46 | 74 | 0.62 | 87 | P 2 | TWD | 19 | DBC | +1.78 | TEC | TEH | | | .31 | HOT | 600UL |
| | | 1.23 | 97 | P 2 | TWD | 30 | VSM | -0.87 | TEC | TEH | | | 31 | HOT | 600UL |
| | | 0.32 | 133 | P 2 | TWD | 11 | VSM | +0.83 | TEC | TEH | | | 31 | HOT | 600UL |
| 46 | 76 | 0.70 | 18 | P 2 | TWD | 22 | DBH | +2.01 | TEC | TEH | | | 30 | HOT | 600UL |
| 46 | 78 | 1.11 | 129 | P 2 | TWD | 30 | DBC | +2.25 | TEC | TEH | | | 30 | HOT | 600UL |
| 46 | 98 | 0.94 | 76 | P 2 | TWD | 29 | DBH | -1.92 | TEC | TEH | | | 34 | HOT | 600UL |
| 46 | 116 | 0.43 | 20 | P 1 | SCI | | TSH | -0.03 | TSH | TSH | 0.34 | 0.16 | 72 | HOT | 600PP |
| | | 0.71 | 38 | P 2 | TWD | 23 | VSM | -0.80 | TEC | TEH | | | 20 | HOT | 600UL |
| 47 | 99 | 0.50 | 62 | P 2 | TWD | 18 | DBC | -1.91 | TEC | TEH | | | 34 | HOT | 600UL |
| | | 1.44 | 109 | P 2 | TWD | 37 | DBH | -2.25 | TEC | TEH | | | 34 | HOT | 600UL |

SG88 - MAI, MCI, MMI, MVI, SAI, SCI, SVI, 0-100%TWD

QUERY: QueryM1

| ROW | LINE | VOLTS | DEG | CHN | IND | %TW | LOCATION | | EXT | EXT | UTIL 1 | UTIL 2 | CAL # | LEG | PROBE |
|---|---|---|---|---|---|---|---|---|---|---|---|---|---|---|---|
| | | 0.32 | 98 | P 2 | TWD | 14 | DBC | +2.15 | TEC | TEH | | | 34 | HOT | 600UL |
| 47 | 109 | 0.21 | 134 | P 2 | TWD | 9 | VSM | +0.98 | STH | TEC | | | 42 | COLD | 600UL |
| 47 | 123 | 0.27 | 21 | P 1 | MCI | | TSH | -0.08 | TSH | TSH | 0.20 | 0.20 | 76 | HOT | 600PP |
| 47 | 143 | 0.37 | 138 | P 2 | TWD | 15 | VSM | -0.81 | TEH | TEC | | | 23 | COLD | 600UL |
| 48 | 58 | 0.39 | 17 | P 1 | SCI | | TSH | -3.20 | TSH | TSH | 0.40 | 0.16 | 53 | HOT | 600PP |
| 48 | 68 | 0.38 | 118 | P 2 | TWD | 14 | VSM | +0.78 | TEC | TEH | | | 17 | HOT | 600UL |
| 48 | 108 | 0.52 | 92 | P 2 | TWD | 17 | VSM | -0.20 | TEC | TEH | | | 10 | HOT | 600UL |
| | | 0.48 | 74 | P 2 | TWD | 16 | VSM | -0.77 | TEC | TEH | | | 10 | HOT | 600UL |
| 49 | 31 | 0.43. | 92 | P 2 | TWD | 16 | 08C | -1.14 | TEH | TEC | | | 50 | COLD | 600UL |
| 49 | 65 | 0.21 | 91 | 2 | SAI | | TSH | +0.18 | TSH | TSH | 0.00 | 0.18 | 57 | HOT | 600PP |
| | | 0.25 | 107 | 2 | SAI | | TSH | +0.40 | TSH | TSH | 0.00 | 0.25 | 57 | HOT | 600PP |
| 49 | 71 | 0.30 | 11 | 2 | SAI | | TSH | -0.63 | TSH | TSH | 0.20 | 0.12 | 68 | HOT | 600PP |
| | | 0.33 | 14 | 2 | SAI | | TSH | -0.46 | TSH | TSH | 0.10 | 0.14 | 68 | HOT | 600PP |
| | | 0.51 | 82 | P 2 | TWD | 18 | VSM | -0.82 | TEC | TEH | | | 30 | HOT | 600UL |
| 49 | 75 | 0.30 | 108 | P 2 | TWD | 11 | DBH | -1.96 | TEC | TEH | | | 30 | HOT | 600UL |
| 49 | 109 | 0.80 | 19 | 2 | SAI | | TSH | -2.59 | TSH | TSH | 1.00 | 0.16 | 67 | HOT | 600PP |
| 50 | 8 | 0.36 | 143 | P 2 | TWD | 16 | VSM | +0.78 | TEH | TEC | | | 46 | COLD | 600UL |
| 50 | 66 | 0.70 | 130 | P 2 | TWD | 24 | 08C | +1.08 | STH | TEC | | | 41 | COLD | 600UL |
| 50 | 76 | 0.72 | 90 | P 2 | TWD | 23 | DBC | -1.81 | TEC | TEH | | | 30 | HOT | 600UL |
| 50 | 98 | 0.32 | 42 | P 2 | TWD | 12 | VSM | -0.89 | TEC | TEH | | | 34 | HOT | 600UL |
| 50 | 110 | 0.47 | 73 | P 2 | TWD | 20 | 08H | +1.23 | TEC | TEH | LAR | | 26 | HOT | 600UL |
| 51 | 77 | 0.49 | 87 | P 2 | TWD | 16 | DBC | -2.00 | TEC | TEH | | | 31 | HOT | 600UL |
| 51 | 79 | 1.14 | 120 | P 2 | TWD | 31 | DBC | -1.76 | TEC | TEH | | | 30 | HOT | 600UL |
| | | 0.70 | 44 | P 2 | TWD | 22 | DBC | +1.88 | TEC | TEH | | | 30 | HOT | 600UL |
| | | 0.30 | 40 | P 2 | TWD | 11 | DBH | +1.41 | TEC | TEH | | | 30 | HOT | 600UL |
| 51 | 99 | 0.69 | 90 | P 2 | TWD | 24 | DBH | -2.05 | TEC | TEH | | | 34 | HOT | 600UL |
| 51 | 105 | 0.41 | 14 | 2 | SAI | | TSH | -1.33 | TSH | TSH | 0.00 | 0.20 | 59 | HOT | 600PP |
| | | 0.39 | 22 | 2 | SAI | | TSH | -1.17 | TSH | TSH | 0.53 | 0.17 | 59 | HOT | 600PP |
| | | 0.32 | 9 | 2 | SAI | | TSH | -0.96 | TSH | TSH | 0.18 | 0.15 | 59 | HOT | 600PP |
| 51 | 111 | 0.62 | 11 | 2 | SAI | | TSH | -4.45 | TSH | TSH | 0.83 | 0.19 | 67 | HOT | 600PP |
| 51 | 163 | 0.52 | 63 | P 2 | TWD | 19 | VH3 | +0.89 | TEH | TEC | | | 35 | COLD | 600UL |
| 52 | 68 | 0.53 | 125 | P 2 | TWD | 19 | VSM | +0.04 | TEC | TEH | | | 17 | HOT | 600UL |
| 52 | 90 | 1.05 | 69 | P 2 | TWD | 27 | DBH | -1.91 | STH | TEC | | | 38 | COLD | 600UL |
| 52 | 94 | 0.49 | 124 | P 2 | TWD | 18 | DBC | -1.77 | TEC | TEH | | | 34 | HOT | 600UL |
| 52 | 96 | 0.49 | 65 | P 2 | TWD | 18 | DBH | -2.14 | TEC | TEH | | | 34 | HOT | 600UL |
| 52 | 104 | 0.58 | 16 | 2 | SAI | | TSH | -1.08 | TSH | TSH | 0.48 | 0.13 | 59 | HOT | 600PP |
| 53 | 81 | 1.15 | 101 | P 2 | TWD | 31 | DBH | -1.61 | TEC | TEH | | | 30 | HOT | 600UL |
| 54 | 8 | 0.57 | 120 | P 2 | TWD | 23 | 01H | +0.08 | TEH | TEC | LAR | | 46 | COLD | 600UL |
| | | 0.15 | 24 | P 2 | TWD | 8 | 01H | -1.01 | TEH | TEC | LAR | | 46 | COLD | 600UL |
| 54 | 64 | 0.70 | 16 | 2 | SAI | | TSH | -1.63 | TSH | TSH | 0.49 | 0.15 | 58 | HOT | 600PP |
| | | 0.79 | 17 | 2 | SAI | | TSH | -3.48 | TSH | TSH | 0.62 | 0.15 | 58 | HOT | 600PP |
| 54 | 74 | 0.56 | 16 | 2 | SAI | | TSH | -1.55 | TSH | TSH | 0.80 | 0.15 | 70 | HOT | 580PP |
| | | 0.49 | 13 | 2 | SAI | | TSH | -1.32 | TSH | TSH | 0.82 | 0.20 | 70 | HOT | 580PP |

SG88 - MAI, MCI, MMI, MVI, SAI, SCI, SVI, 0-100%TWD

QUERY: QueryM1

| ROW | LINE | VOLTS | DEG | CHN | IND | %TW | LOCATION | | EXT | EXT | UTIL 1 | UTIL 2 | CAL # | LEG | PROBE |
|---|---|---|---|---|---|---|---|---|---|---|---|---|---|---|---|
| 54 | 76 | 0.46 | 137 | P 2 | TWD | 16 | DBC | -1.71 | TEC | TEH | | | 30 | HOT | 600UL |
| 54 | 90 | 1.59 | 79 | P 2 | TWD | 35 | DBH | -2.10 | STH | TEC | | | 38 | COLD | 600UL |
| | | 0.84 | 132 | P 2 | TWD | 23 | DBH | +1.75 | STH | TEC | | | 38 | COLD | 600UL |
| | | 0.18 | 8 | P 2 | TWD | 6 | DBC | +1.74 | STH | TEC | | | 38 | COLD | 600UL |
| 54 | 96 | 0.64 | 78 | P 2 | TWD | 19 | DBH | -1.61 | STH | TEC | | | 38 | COLD | 600UL |
| 54 | 108 | 0.14 | 132 | 2 | SAI | | 02H | +7.35 | 02H | 02H | 0.00 | 0.22 | 150 | HOT | 580PP |
| 55 | 83 | 0.67 | 119 | P 2 | TWD | 19 | DBH | -1.89 | STH | TEC | | | 40 | COLD | 600UL |
| | | 0.20 | 162 | P 2 | TWD | 7 | DBH | +1.85 | 01H | TEC | | | 40 | COLD | 600UL |
| 55 | 85 | 0.33 | 14 | 2 | SAI | | TSH | -1.10 | TSH | TSH | 0.30 | 0.21 | 74 | HOT | 580PP |
| 55 | 89 | 0.85 | 95 | P 2 | TWD | 24 | DBC | -1.54 | STH | TEC | | | 38 | COLD | 600UL |
| | | 0.56 | 170 | P 2 | TWD | 17 | DBC | +1.47 | STH | TEC | | | 38 | COLD | 600UL |
| 55 | 91 | 0.39 | 93 | P 2 | TWD | 15 | DBH | -1.99 | TEC | TEH | | | 34 | HOT | 600UL |
| 55 | 117 | 0.24 | 93 | P 1 | SCI | | TSH | -0.08 | TSH | TSH | 0.65 | 0.31 | 71 | HOT | 580PP |
| 56 | 80 | 0.47 | 50 | P 2 | TWD | 16 | DBC | -1.95 | TEC | TEH | | | 31 | HOT | 600UL |
| 56 | 86 | 1.41 | 91 | P 2 | TWD | 36 | DBH | -2.00 | TEC | TEH | | | 34 | HOT | 600UL |
| 56 | 88 | 0.70 | 25 | 2 | SAI | | TSH | -1.40 | TSH | TSH | 0.44 | 0.16 | 64 | HOT | 600PP |
| | | 0.71 | 85 | P 2 | TWD | 22 | DBC | -1.71 | TEC | TEH | | | 35 | HOT | 600UL |
| 56 | 90 | 0.72 | 28 | P 2 | TWD | 24 | DBH | +1.27 | TEC | TEH | | | 34 | HOT | 600UL |
| | | 1.01 | 52 | P 2 | TWD | 30 | DBH | -2.15 | TEC | TEH | | | 34 | HOT | 600UL |
| 56 | 92 | 0.38 | 23 | 2 | SAI | | TSH | -0.60 | TSH | TSH | 0.93 | 0.16 | 63 | HOT | 600PP |
| 57 | 25 | 0.63 | 56 | P 2 | TWD | 21 | VH3 | -0.79 | TEH | TEC | | | 51 | COLD | 600UL |
| 57 | 69 | 0.33 | 118 | P 2 | TWD | 11 | VH3 | +0.82 | TEC | TEH | | | 17 | HOT | 600UL |
| 57 | 81 | 0.43 | 124 | P 2 | TWD | 15 | DBH | -1.49 | TEC | TEH | | | 30 | HOT | 600UL |
| 57 | 111 | 0.76 | 20 | 2 | SAI | | TSH | -4.12 | TSH | TSH | 0.81 | 0.16 | 67 | HOT | 600PP |
| 57 | 167 | 0.59 | 150 | P 2 | TWD | 22 | 02C | +0.84 | TEH | TEC | | | 34 | COLD | 600UL |
| 58 | 70 | 0.40 | 97 | P 2 | TWD | 14 | VSM | -0.82 | TEC | TEH | | | 17 | HOT | 600UL |
| 58 | 88 | 0.29 | 10 | 2 | SAI | | TSH | -0.98 | TSH | TSH | 0.27 | 0.14 | 63 | HOT | 600PP |
| | | 0.32 | 89 | P 2 | TWD | 12 | DBC | -1.73 | TEC | TEH | | | 34 | HOT | 600UL |
| 58 | 134 | 0.33 | 31 | P 1 | SCI | | TSH | -0.05 | TSH | TSH | 0.23 | 0.20 | 42 | HOT | 600PP |
| 59 | 87 | 0.50 | 68 | P 2 | TWD | 17 | DBH | -1.99 | TEC | TEH | | | 35 | HOT | 600UL |
| 59 | 111 | 0.32 | 91 | P 2 | TWD | 12 | 01H | +1.19 | STH | TEC | | | 42 | COLD | 600UL |
| 59 | 143 | 0.41 | 37 | P 2 | TWD | 17 | VH3 | -0.57 | TEH | TEC | | | 23 | COLD | 600UL |
| 61 | 31 | 0.29 | 84 | P 2 | TWD | 11 | VH3 | +1.03 | TEH | TEC | | | 50 | COLD | 600UL |
| 61 | 103 | 0.32 | 23 | P 1 | SCI | | TSH | -0.17 | TSH | TSH | 0.86 | 0.21 | 59 | HOT | 600PP |
| 61 | 125 | 0.35 | 130 | P 2 | TWD | 12 | VC3 | -1.08 | TEC | TEH | | | 14 | HOT | 600UL |
| 62 | 62 | 0.42 | 19 | P 1 | MCI | | TSH | -0.09 | TSH | TSH | 0.10 | 0.17 | 57 | HOT | 600PP |
| 62 | 70 | 0.40 | 133 | P 2 | TWD | 14 | VSM | +0.00 | TEC | TEH | | | 17 | HOT | 600UL |
| 62 | 72 | 0.22 | 13 | P 1 | SCI | | TSH | -0.11 | TSH | TSH | 0.26 | 0.16 | 69 | HOT | 600PP |
| 64 | 80 | 0.57 | 157 | P 2 | TWD | 18 | DBH | +1.62 | TEC | TEH | | | 31 | HOT | 600UL |
| | | 0.39 | 152 | P 2 | TWD | 13 | VSM | -0.76 | TEC | TEH | | | 31 | HOT | 600UL |
| 64 | 98 | 0.15 | 105 | 2 | SAI | | TSH | +0.11 | TSH | TSH | 0.00 | 0.13 | 59 | HOT | 600PP |
| 65 | 69 | 0.56 | 16 | P 1 | SCI | | TSH | -0.14 | TSH | TSH | 0.00 | 0.25 | 58 | HOT | 600PP |

SG88 - MAI, MCI, MMI, MVI, SAI, SCI, SVI, 0-100%TWD

QUERY: QueryM1

| ROW | LINE | VOLTS | DEG | CHN | IND | %TW | LOCATION | | EXT | EXT | UTIL 1 | UTIL 2 | CAL # | LEG | PROBE |
|---|---|---|---|---|---|---|---|---|---|---|---|---|---|---|---|
| 65 | 97 | 0.42 | 95 | P 2 | TWD | 14 | 02H | -1.13 | TEC | TEH | | | 35 | HOT | 600UL |
| 65 | 113 | 0.42 | 30 | P 1 | SCI | | TSH | -0.11 | TSH | TSH | 0.57 | 0.22 | 67 | HOT | 600PP |
| 65 | 119 | 0.41 | 22 | P 1 | SCI | | TSH | -0.08 | TSH | TSH | 0.45 | 0.19 | 72 | HOT | 600PP |
| 65 | 121 | 0.19 | 24 | P 1 | SCI | | TSH | -0.14 | TSH | TSH | 0.12 | 0.16 | 72 | HOT | 600PP |
| 66 | 48 | 0.57 | 123 | P 2 | TWD | 19 | VSM | -0.82 | TEC | TEH | | | 12 | HOT | 600UL |
| 67 | 83 | 0.18 | 95 | 4 | MAI | | TSH | +0.59 | TSH | TSH | 0.00 | 0.17 | 170 | HOT | 580PP |
| 67 | 85 | 0.79 | 52 | P 2 | TWD | 23 | DBC | -1.91 | TEC | TEH | | | 35 | HOT | 600UL |
| 67 | 109 | 0.18 | 118 | P 1 | SCI | | TSH | +0.03 | TSH | TSH | 0.00 | 0.20 | 68 | HOT | 600PP |
| 67 | 121 | 0.17 | 90 | P 2 | TWD | 8 | VSM | +0.81 | TEC | TEH | | | 19 | HOT | 600UL |
| 67 | 129 | 0.23 | 148 | P 2 | TWD | 11 | VH3 | +0.00 | TEC | TEH | | | 9 | HOT | 600UL |
| 67 | 159 | 0.47 | 118 | P 2 | TWD | 17 | VC3 | -0.31 | TEH | TEC | | | 29 | COLD | 600UL |
| | | 0.32 | 122 | P 2 | TWD | 12 | VH3 | +0.81 | TEH | TEC | | | 29 | COLD | 600UL |
| 67 | 165 | 0.79 | 120 | P 2 | TWD | 27 | VH3 | -0.83 | TEH | TEC | | | 34 | COLD | 600UL |
| 68 | 70 | 0.42 | 20 | P 1 | SCI | | TSH | -0.08 | TSH | TSH | 0.09 | 0.19 | 58 | HOT | 600PP |
| 68 | 74 | 0.18 | 22 | P 1 | SCI | | TSH | -0.07 | TSH | TSH | 0.18 | 0.19 | 69 | HOT | 600PP |
| 68 | 90 | 0.24 | 98 | 2 | SAI | | TSH | +0.55 | TSH | TSH | 0.17 | 0.19 | 64 | HOT | 600PP |
| 68 | 102 | 0.87 | 27 | P 1 | MCI | | TSH | -0.18 | TSH | TSH | 0.87 | 0.21 | 59 | HOT | 600PP |
| 68 | 146 | 0.50 | 110 | P 2 | TWD | 21 | VC3 | -0.86 | TEH | TEC | | | 25 | COLD | 600UL |
| 69 | 163 | 0.36 | 94 | P 2 | TWD | 14 | VSM | +0.83 | TEH | TEC | | | 34 | COLD | 600UL |
| 70 | 70 | 0.50 | 86 | P 2 | TWD | 18 | VC3 | -0.86 | TEC | TEH | | | 17 | HOT | 600UL |
| 71 | 63 | 0.52 | 115 | P 2 | TWD | 18 | VH3 | -0.88 | TEC | TEH | | | 17 | HOT | 600UL |
| 71 | 85 | 0.87 | 52 | P 2 | TWD | 24 | DBC | -1.91 | TEC | TEH | | | 35 | HOT | 600UL |
| 71 | 89 | 0.19 | 132 | 2 | SAI | | TSH | +0.85 | TSH | TSH | 0.24 | 0.16 | 63 | HOT | 600PP |
| 71 | 97 | 0.28 | 76 | P 2 | TWD | 10 | 01H | +0.88 | TEC | TEH | | | 35 | HOT | 600UL |
| 72 | 70 | 0.36 | 91 | P 2 | TWD | 13 | VC3 | -1.10 | TEC | TEH | | | 18 | HOT | 600UL |
| 72 | 88 | 0.54 | 105 | P 2 | TWD | 20 | DBC | -1.82 | TEC | TEH | | | 34 | HOT | 600UL |
| 72 | 90 | 0.60 | 141 | P 2 | TWD | 19 | VSM | +0.86 | TEC | TEH | | | 35 | HOT | 600UL |
| 72 | 98 | 0.45 | 102 | P 2 | TWD | 17 | 02H | -1.24 | TEC | TEH | | | 34 | HOT | 600UL |
| 72 | 106 | 0.46 | 27 | P 1 | SCI | | TSH | -0.12 | TSH | TSH | 0.19 | 0.17 | 60 | HOT | 600PP |
| | | 0.51 | 83 | P 2 | TWD | 16 | VH3 | -0.80 | TEC | TEH | | | 35 | HOT | 600UL |
| 72 | 118 | 0.23 | 68 | P 2 | TWD | 8 | VH3 | -0.83 | TEC | TEH | | | 9 | HOT | 600UL |
| 73 | 73 | 0.82 | 119 | P 2 | TWD | 24 | VSM | +0.93 | TEC | TEH | | | 31 | HOT | 600UL |
| 73 | 133 | 0.51 | 131 | P 2 | TWD | 20 | VH3 | +0.87 | TEH | TEC | | | 22 | COLD | 600UL |
| 74 | 82 | 0.46 | 127 | P 2 | TWD | 16 | VSM | -0.94 | TEC | TEH | | | 31 | HOT | 600UL |
| | | 0.95 | 140 | P 2 | TWD | 26 | VSM | +0.82 | TEC | TEH | | | 31 | HOT | 600UL |
| 74 | 100 | 0.21 | 79 | P 1 | MCI | | TSH | -0.02 | TSH | TSH | 0.00 | 0.45 | 59 | HOT | 600PP |
| 74 | 146 | 0.75 | 141 | P 2 | TWD | 23 | VH3 | -0.83 | TEH | TEC | | | 26 | COLD | 600UL |
| | | 0.72 | 59 | P 2 | TWD | 23 | VC3 | -0.95 | TEH | TEC | | | 26 | COLD | 600UL |
| | | 1.02 | 143 | P 2 | TWD | 28 | VC3 | +0.85 | TEH | TEC | | | 26 | COLD | 600UL |
| 74 | 148 | 0.26 | 82 | P 2 | TWD | 11 | VH3 | -0.86 | TEH | TEC | | | 26 | COLD | 600UL |

SG88 - MAI, MCI, MMI, MVI, SAI, SCI, SVI, 0-100%TWD

QUERY: QueryM1

| ROW | LINE | VOLTS | DEG | CHN | IND | %TW | LOCATION | | EXT | EXT | UTIL 1 | UTIL 2 | CAL # | LEG | PROBE |
|---|---|---|---|---|---|---|---|---|---|---|---|---|---|---|---|
| 75 | 139 | 0.23 | 86 | P 2 | TWD | 9 | VH3 | -0.92 | TEH | TEC | | | 23 | COLD | 600UL |
| | | 0.34 | 156 | P 2 | TWD | 14 | VH3 | +0.80 | TEH | TEC | | | 23 | COLD | 600UL |
| | | 0.89 | 97 | P 2 | TWD | 28 | VSM | +0.04 | TEH | TEC | | | 23 | COLD | 600UL |
| 76 | 84 | 0.23 | 34 | P 2 | TWD | 9 | VH3 | -0.83 | TEC | TEH | | | 30 | HOT | 600UL |
| | | 0.20 | 70 | P 2 | TWD | 8 | VH3 | +0.72 | TEC | TEH | | | 30 | HOT | 600UL |
| 76 | 88 | 0.54 | 63 | P 2 | TWD | 17 | 03H | -1.14 | TEC | TEH | | | 35 | HOT | 600UL |
| 76 | 90 | 0.41 | 45 | P 2 | TWD | 16 | VSM | +0.08 | TEC | TEH | | | 34 | HOT | 600UL |
| 76 | 100 | 0.46 | 142 | P 2 | TWD | 16 | VC3 | -0.85 | TEC | TEH | | | 35 | HOT | 600UL |
| 76 | 134 | 0.44 | 127 | P 2 | TWD | 16 | VH3 | +0.73 | TEH | TEC | | | 21 | COLD | 600UL |
| 77 | 31 | 0.22 | 122 | P 2 | TWD | 9 | VSM | +0.33 | TEH | TEC | | | 50 | COLD | 600UL |
| 77 | 33 | 0.55 | 79 | P 2 | TWD | 18 | VSM | +0.86 | TEH | TEC | | | 52 | COLD | 600UL |
| 77 | 93 | 0.29 | 110 | P 1 | SCI | | TSH | -0.03 | TSH | TSH | 0.25 | 0.25 | 63 | HOT | 600PP |
| 77 | 97 | 0.21 | 130 | P 1 | SCI | | TSH | -0.04 | TSH | TSH | 0.44 | 0.38 | 63 | HOT | 600PP |
| 78 | 22 | 0.69 | 105 | P 2 | TWD | 23 | VC3 | -0.88 | TEH | TEC | | | 48 | COLD | 600UL |
| 78 | 26 | 0.37 | 95 | 2 | SAI | | 06H | +0.58 | 06H | 06H | 0.65 | 0.29 | 123 | HOT | 580PP |
| 78 | 120 | 0.28 | 34 | P 2 | TWD | 12 | VC3 | +0.67 | TEC | TEH | | | 9 | HOT | 600UL |
| 78 | 136 | 0.56 | 66 | P 2 | TWD | 21 | DBH | -1.99 | TEH | TEC | | | 22 | COLD | 600UL |
| 78 | 138 | 0.23 | 166 | P 2 | TWD | 9 | DBC | +1.53 | TEH | TEC | | | 24 | COLD | 600UL |
| 78 | 142 | 0.48 | 133 | P 2 | TWD | 18 | VH3 | +0.84 | TEH | TEC | | | 24 | COLD | 600UL |
| 78 | 148 | 0.59 | 143 | P 2 | TWD | 20 | 08C | -0.86 | TEH | TEC | | | 26 | COLD | 600UL |
| 78 | 154 | 0.49 | 134 | P 2 | TWD | 18 | VC3 | +0.88 | TEH | TEC | | | 28 | COLD | 600UL |
| 79 | 73 | 0.40 | 97 | P 2 | TWD | 14 | VSM | +0.79 | TEC | TEH | | | 31 | HOT | 600UL |
| 79 | 103 | 0.37 | 28 | P 1 | SCI | | TSH | +0.00 | TSH | TSH | 0.58 | 0.30 | 60 | HOT | 600PP |
| 79 | 143 | 0.20 | 134 | P 2 | TWD | 9 | DBC | -1.26 | TEH | TEC | | | 23 | COLD | 600UL |
| 80 | 24 | 0.37 | 97 | 2 | SAI | | 06H | +0.22 | 06H | 06H | 0.31 | 0.17 | 123 | HOT | 580PP |
| 80 | 80 | 0.45 | 133 | P 2 | TWD | 15 | VSM | -0.82 | TEC | TEH | | | 31 | HOT | 600UL |
| 80 | 112 | 0.25 | 87 | P 2 | TWD | 10 | VSM | -0.91 | TEC | TEH | | | 9 | HOT | 600UL |
| 81 | 23 | 0.47 | 57 | P 2 | TWD | 18 | DBC | +1.60 | TEH | TEC | | | 49 | COLD | 600UL |
| 81 | 39 | 0.23 | 101 | P 2 | TWD | 9 | VSM | +0.92 | TEH | TEC | | | 3 | COLD | 600UL |
| 81 | 97 | 0.30 | 21 | P 1 | SCI | | TSH | -0.10 | TSH | TSH | 0.43 | 0.27 | 63 | HOT | 600PP |
| 81 | 151 | 0.37 | 137 | P 2 | TWD | 14 | VH3 | +0.62 | TEH | TEC | | | 28 | COLD | 600UL |
| 82 | 54 | 0.86 | 118 | P 2 | TWD | 26 | VH3 | -0.84 | TEC | TEH | | | 11 | HOT | 600UL |
| 82 | 72 | 0.26 | 20 | P 1 | SCI | | TSH | -0.15 | TSH | TSH | 0.39 | 0.19 | 69 | HOT | 600PP |
| 82 | 88 | 0.29 | 20 | P 1 | MCI | | TSH | -0.11 | TSH | TSH | 0.33 | 0.19 | 73 | HOT | 600PP |
| 83 | 111 | 0.42 | 29 | P 1 | SCI | | TSH | -0.12 | TSH | TSH | 0.19 | 0.25 | 67 | HOT | 600PP |
| 83 | 129 | 0.27 | 71 | P 2 | TWD | 12 | VC2 | +0.55 | TEC | TEH | | | 9 | HOT | 600UL |
| 84 | 24 | 0.33 | 133 | 2 | SAI | | 06H | -0.29 | 06H | 06H | 0.65 | 0.24 | 123 | HOT | 580PP |
| 84 | 104 | 0.40 | 29 | P 2 | TWD | 15 | 09H | -1.11 | TEC | TEH | | | 34 | HOT | 600UL |
| 84 | 114 | 0.31 | 117 | P 2 | TWD | 14 | 09C | +0.00 | TEC | TEH | | | 9 | HOT | 600UL |

SG88 - MAI, MCI, MMI, MVI, SAI, SCI, SVI, 0-100%TWD

QUERY: QueryM1

| ROW | LINE | VOLTS | DEG | CHN | IND | %TW | LOCATION | | EXT | EXT | UTIL 1 | UTIL 2 | CAL # | LEG | PROBE |
|---|---|---|---|---|---|---|---|---|---|---|---|---|---|---|---|
| 85 | 27 | 0.26 | 125 | 2 | SAI | | 07H | +0.48 | 07H | 07H | 0.12 | 0.24 | 123 | HOT | 580PP |
| 85 | 67 | 0.45 | 96 | P 2 | TWD | 16 | VH2 | -0.74 | TEC | TEH | | | 17 | HOT | 600UL |
| 85 | 91 | 0.47 | 123 | P 2 | TWD | 18 | 09H | -1.15 | TEC | TEH | | | 34 | HOT | 600UL |
| 85 | 119 | 0.39 | 73 | P 2 | TWD | 16 | 09H | +1.50 | TEC | TEH | LOCOK | | 9 | HOT | 600UL |
| 85 | 141 | 0.47 | 96 | P 2 | TWD | 18 | 09H | +1.44 | TEH | TEC | LOCOK | | 23 | COLD | 600UL |
| 86 | 86 | 0.19 | 115 | P 1 | SCI | | TSH | +0.05 | TSH | TSH | 0.00 | 0.33 | 170 | HOT | 580PP |
| 86 | 130 | 0.35 | 128 | P 2 | TWD | 13 | VC2 | +0.80 | TEH | TEC | | | 21 | COLD | 600UL |
| 87 | 37 | 0.42 | 126 | P 2 | TWD | 15 | VH2 | -0.78 | TEH | TEC | | | 5 | COLD | 600UL |
| | | 0.34 | 126 | P 2 | TWD | 13 | VH2 | +0.76 | TEH | TEC | | | 5 | COLD | 600UL |
| 87 | 125 | 0.30 | 113 | P 2 | TWD | 13 | VH2 | -0.83 | TEC | TEH | | | 9 | HOT | 600UL |
| 87 | 127 | 0.37 | 55 | P 2 | TWD | 14 | VH2 | -0.81 | TEC | TEH | | | 9 | HOT | 600UL |
| 87 | 129 | 0.32 | 129 | P 2 | TWD | 14 | VH2 | -0.79 | TEC | TEH | | | 9 | HOT | 600UL |
| 87 | 133 | 0.33 | 106 | 2 | SAI | | 06H | -0.02 | 06H | 06H | 0.99 | 0.59 | 117 | HOT | 580PP |
| 88 | 30 | 0.25 | 115 | 2 | SAI | | 07H | +0.72 | 07H | 07H | 0.23 | 0.35 | 123 | HOT | 580PP |
| | | 0.24 | 101 | 2 | SAI | | 07H | -0.20 | 07H | 07H | 0.33 | 0.31 | 123 | HOT | 580PP |
| 88 | 52 | 0.46 | 53 | P 2 | TWD | 16 | VH2 | +0.86 | TEC | TEH | | | 11 | HOT | 600UL |
| 89 | 33 | 0.29 | 151 | P 2 | TWD | 11 | VH2 | -0.86 | TEH | TEC | | | 52 | COLD | 600UL |
| 89 | 37 | 0.44 | 121 | P 2 | TWD | 16 | VH2 | -0.76 | TEH | TEC | | | 5 | COLD | 600UL |
| | | 0.27 | 73 | P 2 | TWD | 10 | VH2 | +0.78 | TEH | TEC | | | 5 | COLD | 600UL |
| 89 | 51 | 0.37 | 110 | P 2 | TWD | 14 | VH3 | +0.82 | TEC | TEH | | | 11 | HOT | 600UL |
| 89 | 61 | 0.40 | 142 | P 2 | TWD | 15 | VH3 | +0.84 | TEC | TEH | | | 15 | HOT | 600UL |
| | | 0.39 | 83 | P 2 | TWD | 15 | VH3 | -0.84 | TEC | TEH | | | 15 | HOT | 600UL |
| 89 | 123 | 0.47 | 120 | P 2 | TWD | 16 | VH2 | -0.95 | TEC | TEH | | | 10 | HOT | 600UL |
| 89 | 125 | 0.37 | 28 | P 2 | TWD | 14 | VH2 | -0.99 | TEC | TEH | | | 9 | HOT | 600UL |
| 89 | 127 | 0.58 | 127 | P 2 | TWD | 19 | VH2 | -0.93 | TEC | TEH | | | 10 | HOT | 600UL |
| 89 | 141 | 0.41 | 60 | P 2 | TWD | 17 | VH2 | +0.77 | TEH | TEC | | | 23 | COLD | 600UL |
| | | 0.28 | 96 | P 2 | TWD | 11 | VC2 | +0.75 | TEH | TEC | | | 23 | COLD | 600UL |
| 89 | 143 | 0.38 | 142 | P 2 | TWD | 15 | VH2 | -0.81 | TEH | TEC | | | 23 | COLD | 600UL |
| 90 | 40 | 0.18 | 83 | 2 | SAI | | 07H | -0.53 | 07H | 07H | 0.15 | 0.23 | 127 | HOT | 580PP |
| 90 | 58 | 0.46 | 24 | P 1 | SCI | | TSH | -0.15 | TSH | TSH | 0.68 | 0.19 | 65 | HOT | 600PP |
| 90 | 78 | 0.57 | 109 | P 2 | TWD | 20 | 03H | -1.03 | TEH | TEC | | | 7 | COLD | 600UL |
| 90 | 148 | 0.41 | 33 | P 2 | TWD | 16 | VH2 | +0.90 | TEH | TEC | | | 19 | COLD | 600UL |
| 92 | 26 | 0.66 | 70 | P 2 | TWD | 23 | VH2 | -0.81 | TEH | TEC | | | 55 | COLD | 600UL |
| 92 | 36 | 0.68 | 43 | P 2 | TWD | 24 | VH2 | -0.81 | TEH | TEC | | | 55 | COLD | 600UL |
| | | 0.29 | 68 | P 2 | TWD | 12 | VSM | +0.85 | TEH | TEC | | | 55 | COLD | 600UL |
| 93 | 153 | 0.50 | 59 | P 2 | TWD | 18 | 05C | -0.88 | TEH | TEC | | | 19 | COLD | 600UL |
| | | 0.43 | 78 | P 2 | TWD | 17 | 03C | +0.91 | TEH | TEC | | | 19 | COLD | 600UL |
| 94 | 32 | 0.44 | 101 | P 2 | TWD | 17 | VH2 | -0.84 | TEH | TEC | | | 54 | COLD | 600UL |
| 94 | 84 | 0.31 | 158 | P 2 | TWD | 12 | VH3 | +0.84 | TEH | TEC | | | 8 | COLD | 600UL |
| 94 | 116 | 0.35 | 70 | P 2 | TWD | 15 | 01H | +0.81 | TEC | TEH | | | 1 | HOT | 600UL |
| 94 | 138 | 0.30 | 79 | P 2 | TWD | 12 | VSM | +0.19 | TEH | TEC | | | 19 | COLD | 600UL |

SG88 - MAI, MCI, MMI, MVI, SAI, SCI, SVI, 0-100%TWD

QUERY: QueryM1

| ROW | LINE | VOLTS | DEG | CHN | IND | %TW | LOCATION | | EXT | EXT | UTIL 1 | UTIL 2 | CAL # | LEG | PROBE |
|---|---|---|---|---|---|---|---|---|---|---|---|---|---|---|---|
| 95 | 39 | 0.30 | 123 | P 2 | TWD | 13 | VSM | +0.69 | TEH | TEC | | | 54 | COLD | 600UL |
| 96 | 30 | 0.27 | 109 | P 2 | TWD | 12 | 06H | +0.80 | TEH | TEC | | | 54 | COLD | 600UL |
| 96 | 50 | 0.46 | 54 | P 2 | TWD | 18 | VC2 | +0.80 | TEC | TEH | | | 8 | HOT | 600UL |
| 96 | 150 | 0.53 | 116 | P 2 | TWD | 19 | VH2 | -0.96 | TEH | TEC | | | 20 | COLD | 600UL |
| 97 | 51 | 0.32 | 73 | P 2 | TWD | 13 | 08C | -0.82 | TEC | TEH | | | 7 | HOT | 600UL |
| 97 | 97 | 0.41 | 24 | P 1 | SCI | | TSH | -0.11 | TSH | TSH | 0.23 | 0.17 | 78 | HOT | 580PP |
| 98 | 74 | 0.27 | 163 | P 2 | TWD | 11 | VC2 | +0.78 | TEH | TEC | | | 8 | COLD | 600UL |
| 98 | 88 | 0.28 | 140 | P 2 | TWD | 11 | VH2 | -0.63 | TEH | TEC | | | 10 | COLD | 600UL |
| 99 | 51 | 0.39 | 90 | P 2 | TWD | 15 | VC2 | -0.76 | TEC | TEH | | | 7 | HOT | 600UL |
| 99 | 121 | 0.27 | 115 | P 2 | TWD | 12 | VH2 | -0.89 | TEC | TEH | | | 1 | HOT | 600UL |
| 99 | 123 | 0.19 | 113 | P 2 | TWD | 9 | VC2 | +0.55 | TEC | TEH | | | 5 | HOT | 600UL |
| 100 | 120 | 0.28 | 65 | P 2 | TWD | 13 | 05H | -0.24 | TEC | TEH | | | 1 | HOT | 600UL |
| 100 | 122 | 0.26 | 69 | P 2 | TWD | 10 | VH3 | -0.84 | TEC | TEH | | | 6 | HOT | 600UL |
| 101 | 27 | 0.31 | 56 | P 2 | TWD | 13 | VH2 | +0.75 | TEH | TEC | | | 54 | COLD | 600UL |
| 101 | 147 | 0.52 | 148 | P 2 | TWD | 19 | VSM | -0.66 | TEH | TEC | | | 19 | COLD | 600UL |
| 102 | 26 | 0.39 | 45 | P 2 | TWD | 16 | 06H | +0.83 | TEH | TEC | | | 55 | COLD | 600UL |
| 105 | 133 | 0.15 | 70 | 2 | SAI | | 08H | -0.41 | 08H | 08H | 0.30 | 0.46 | 155 | HOT | 580PP |
| 106 | 30 | 0.35 | 125 | P 2 | TWD | 15 | 06H | +0.84 | TEH | TEC | | | 54 | COLD | 600UL |
| 107 | 97 | 0.23 | 140 | P 2 | TWD | 10 | VH3 | -0.84 | TEH | TEC | | | 11 | COLD | 600UL |
| 107 | 115 | 0.27 | 35 | P 2 | TWD | 8 | VH2 | +0.86 | 07H | TEC | | | 33 | COLD | 600UL |
| 107 | 125 | 0.21 | 112 | P 2 | TWD | 7 | DBH | -1.61 | TEC | TEH | | | 6 | HOT | 600UL |
| 108 | 36 | 0.35 | 65 | P 2 | TWD | 15 | DBC | -1.64 | TEH | TEC | | | 55 | COLD | 600UL |
| 110 | 138 | 0.37 | 141 | P 2 | TWD | 14 | VC3 | -0.88 | TEH | TEC | | | 19 | COLD | 600UL |
| 111 | 37 | 0.61 | 37 | P 2 | TWD | 22 | DBH | +1.07 | TEH | TEC | | | 54 | COLD | 600UL |
| 111 | 57 | 0.38 | 54 | P 2 | TWD | 15 | VH3 | -0.80 | TEC | TEH | | | 7 | HOT | 600UL |
| 111 | 93 | 0.22 | 78 | P 2 | TWD | 9 | 05H | +0.93 | TEH | TEC | | | 11 | COLD | 600UL |
| 111 | 101 | 0.23 | 89 | P 2 | TWD | 10 | DBH | -0.91 | TEH | TEC | | | 44 | COLD | 600UL |
| 112 | 92 | 0.40 | 48 | P 2 | TWD | 16 | VH2 | -0.77 | TEH | TEC | | | 11 | COLD | 600UL |
| 112 | 144 | 1.00 | 165 | P 2 | TWD | 28 | DBH | +2.04 | TEH | TEC | | | 20 | COLD | 600UL |
| 113 | 37 | 0.31 | 118 | P 2 | TWD | 13 | VH2 | -0.97 | TEH | TEC | | | 55 | COLD | 600UL |
| 113 | 39 | 0.45 | 130 | P 2 | TWD | 18 | DBH | +1.79 | TEH | TEC | | | 55 | COLD | 600UL |
| 113 | 41 | 0.54 | 113 | P 2 | TWD | 20 | VH2 | -0.59 | TEH | TEC | | | 53 | COLD | 600UL |
| 113 | 99 | 0.31 | 138 | P 2 | TWD | 12 | VH2 | -0.84 | TEH | TEC | | | 12 | COLD | 600UL |
| 114 | 96 | 0.30 | 156 | P 2 | TWD | 12 | VH3 | -0.79 | TEH | TEC | | | 12 | COLD | 600UL |
| 114 | 108 | 0.14 | 126 | P 1 | SCI | | TSH | +0.03 | TSH | TSH | 0.00 | 0.18 | 86 | HOT | 580PP |
| 114 | 110 | 0.32 | 94 | P 2 | TWD | 14 | DBH | -1.75 | TEC | TEH | | | 1 | HOT | 600UL |
| 116 | 102 | 0.42 | 125 | P 2 | TWD | 17 | DBH | +0.65 | TEH | TEC | | | 11 | COLD | 600UL |

SG88 - MAI, MCI, MMI, MVI, SAI, SCI, SVI, 0-100%TWD

QUERY: QueryM1

| ROW | LINE | VOLTS | DEG | CHN | IND | %TW | LOCATION | | EXT | EXT | UTIL 1 | UTIL 2 | CAL # | LEG | PROBE |
|---|---|---|---|---|---|---|---|---|---|---|---|---|---|---|---|
| 118 | 88 | 0.40 | 125 | P 2 | TWD | 15 | VH1 | -0.71 | TEH | TEC | | | 10 | COLD | 600UL |
| | | 0.36 | 121 | P 2 | TWD | 14 | VH1 | +0.71 | TEH | TEC | | | 10 | COLD | 600UL |
| 119 | 39 | 0.27 | 152 | P 2 | TWD | 11 | VH1 | -0.92 | TEH | TEC | | | 54 | COLD | 600UL |
| 119 | 41 | 0.34 | 138 | P 2 | TWD | 12 | VH1 | -0.82 | TEH | TEC | | | 52 | COLD | 600UL |
| 119 | 55 | 0.35 | 95 | P 2 | TWD | 14 | DBH | +1.69 | TEC | TEH | | | 7 | HOT | 600UL |
| 119 | 59 | 0.40 | 132 | P 2 | TWD | 14 | VH1 | -1.01 | TEC | TEH | | | 3 | HOT | 600UL |
| 119 | 61 | 0.36 | 136 | P 2 | TWD | 13 | VH1 | -1.02 | TEC | TEH | | | 3 | HOT | 600UL |
| 119 | 65 | 0.32 | 126 | P 2 | TWD | 12 | VH1 | -1.17 | TEC | TEH | | | 3 | HOT | 600UL |
| 119 | 67 | 0.41 | 136 | P 2 | TWD | 15 | VH1 | -0.99 | TEC | TEH | | | 3 | HOT | 600UL |
| 119 | 79 | 0.50 | 114 | P 2 | TWD | 19 | DBH | +2.00 | TEH | TEC | | | 8 | COLD | 600UL |
| 119 | 95 | 0.47 | 104 | P 2 | TWD | 18 | DBH | -1.32 | TEH | TEC | | | 11 | COLD | 600UL |
| 119 | 101 | 0.39 | 113 | P 2 | TWD | 15 | DBH | -1.85 | TEH | TEC | | | 11 | COLD | 600UL |
| 120 | 38 | 0.43 | 115 | P 2 | TWD | 17 | DBC | +1.83 | TEH | TEC | | | 55 | COLD | 600UL |
| 120 | 72 | 0.65 | 76 | P 2 | TWD | 22 | 09C | -1.10 | TEH | TEC | | | 5 | COLD | 600UL |
| 120 | 74 | 0.30 | 103 | P 2 | TWD | 12 | 10H | -1.25 | TEH | TEC | | | 7 | COLD | 600UL |
| 120 | 80 | 0.33 | 78 | P 2 | TWD | 13 | DBH | -1.90 | TEH | TEC | | | 8 | COLD | 600UL |
| 120 | 86 | 0.25 | 65 | P 2 | TWD | 9 | DBH | -1.69 | TEH | TEC | | | 9 | COLD | 600UL |
| | | 0.39 | 100 | P 2 | TWD | 14 | 10H | +1.45 | TEH | TEC | LOCOK | | 9 | COLD | 600UL |
| 120 | 88 | 0.39 | 65 | P 2 | TWD | 14 | 03H | -0.15 | TEH | TEC | | | 9 | COLD | 600UL |
| 120 | 92 | 0.27 | 116 | P 2 | TWD | 11 | 10H | +0.11 | TEH | TEC | | | 11 | COLD | 600UL |
| | | 0.36 | 82 | P 2 | TWD | 14 | DBH | -2.10 | TEH | TEC | | | 11 | COLD | 600UL |
| 120 | 120 | 0.30 | 122 | P 2 | TWD | 13 | VH1 | -0.90 | TEC | TEH | | | 1 | HOT | 600UL |
| 120 | 138 | 0.54 | 62 | P 2 | TWD | 19 | DBH | -1.62 | TEH | TEC | | | 20 | COLD | 600UL |
| 121 | 39 | 0.44 | 38 | P 2 | TWD | 18 | 03C | -0.94 | TEH | TEC | | | 55 | COLD | 600UL |
| 121 | 41 | 0.52 | 146 | P 2 | TWD | 19 | VH1 | -0.83 | TEH | TEC | | | 53 | COLD | 600UL |
| | | 0.31 | 47 | P 2 | TWD | 13 | VH1 | +0.76 | TEH | TEC | | | 53 | COLD | 600UL |
| 121 | 57 | 0.36 | 98 | P 2 | TWD | 15 | VH1 | -1.05 | TEC | TEH | | | 8 | HOT | 600UL |
| 121 | 67 | 0.21 | 41 | P 2 | TWD | 8 | DBH | -1.51 | TEC | TEH | | | 4 | HOT | 600UL |
| 121 | 75 | 0.43 | 133 | P 2 | TWD | 16 | VH1 | -0.78 | TEH | TEC | | | 8 | COLD | 600UL |
| 121 | 95 | 0.62 | 118 | P 2 | TWD | 21 | VH1 | -0.86 | TEH | TEC | | | 12 | COLD | 600UL |
| 121 | 97 | 0.47 | 138 | P 2 | TWD | 16 | 10H | +0.00 | TEH | TEC | | | 12 | COLD | 600UL |
| 121 | 99 | 0.57 | 151 | P 2 | TWD | 19 | VH1 | -0.73 | TEH | TEC | | | 12 | COLD | 600UL |
| 121 | 125 | 0.26 | 96 | P 2 | TWD | 12 | 10H | +0.70 | TEC | TEH | | | 5 | HOT | 600UL |
| 122 | 94 | 0.30 | 143 | P 2 | TWD | 12 | DBH | +2.22 | TEH | TEC | | | 12 | COLD | 600UL |
| 122 | 96 | 0.52 | 131 | P 2 | TWD | 19 | DBH | +1.85 | TEH | TEC | | | 12 | COLD | 600UL |
| 122 | 112 | 0.20 | 91 | P 2 | TWD | 9 | 10H | -1.16 | TEC | TEH | | | 1 | HOT | 600UL |
| 122 | 114 | 0.34 | 84 | P 2 | TWD | 14 | 10H | +0.86 | TEC | TEH | | | 1 | HOT | 600UL |
| 122 | 124 | 0.46 | 126 | P 2 | TWD | 19 | DBH | +1.85 | TEC | TEH | | | 5 | HOT | 600UL |
| 123 | 41 | 0.45 | 135 | P 2 | TWD | 17 | VH1 | -0.87 | TEH | TEC | | | 53 | COLD | 600UL |
| 123 | 55 | 0.47 | 100 | P 2 | TWD | 17 | VH1 | +0.00 | TEC | TEH | | | 7 | HOT | 600UL |

SG88 - MAI, MCI, MMI, MVI, SAI, SCI, SVI, 0-100%TWD

QUERY: QueryM1

| ROW | LINE | VOLTS | DEG | CHN | IND | %TW | LOCATION | EXT | EXT | UTIL 1 | UTIL 2 | CAL # | LEG | PROBE |
|---|---|---|---|---|---|---|---|---|---|---|---|---|---|---|
| 123 | 65 | 0.36 | 127 | P 2 | TWD | 13 | DBH +0.02 | TEC | TEH | | | 3 | HOT | 600UL |
| | | 0.57 | 122 | P 2 | TWD | 19 | VH1 -0.91 | TEC | TEH | | | 3 | HOT | 600UL |
| 123 | 67 | 0.44 | 137 | P 2 | TWD | 15 | VH1 -0.88 | TEC | TEH | | | 3 | HOT | 600UL |
| 123 | 71 | 0.38 | 133 | P 2 | TWD | 13 | VH1 -0.84 | TEH | TEC | | | 5 | COLD | 600UL |
| 123 | 77 | 0.28 | 102 | P 2 | TWD | 12 | VH2 -0.79 | TEH | TEC | | | 7 | COLD | 600UL |
| 123 | 85 | 0.46 | 145 | P 2 | TWD | 17 | VH1 -0.81 | TEH | TEC | | | 8 | COLD | 600UL |
| 123 | 97 | 0.50 | 144 | P 2 | TWD | 17 | VH1 -0.84 | TEH | TEC | | | 43 | COLD | 600UL |
| 123 | 109 | 0.43 | 107 | P 2 | TWD | 17 | VH1 -1.07 | TEC | TEH | | | 1 | HOT | 600UL |
| 123 | 111 | 0.46 | 67 | P 2 | TWD | 18 | DBH +1.73 | TEC | TEH | | | 1 | HOT | 600UL |
| | | 0.40 | 91 | P 2 | TWD | 17 | VH1 -0.99 | TEC | TEH | | | 1 | HOT | 600UL |
| | | 0.27 | 106 | P 2 | TWD | 12 | 10H -0.99 | TEC | TEH | | | 1 | HOT | 600UL |
| 123 | 115 | 0.37 | 95 | P 2 | TWD | 15 | VH1 -1.04 | TEC | TEH | | | 1 | HOT | 600UL |
| 123 | 117 | 0.46 | 122 | P 2 | TWD | 19 | VH1 -0.96 | TEC | TEH | | | 1 | HOT | 600UL |
| 123 | 121 | 0.47 | 94 | P 2 | TWD | 19 | VH1 -0.99 | TEC | TEH | | | 1 | HOT | 600UL |
| 124 | 64 | 0.31 | 53 | P 2 | TWD | 13 | 10H -0.97 | TEC | TEH | | | 4 | HOT | 600UL |
| 124 | 76 | 0.31 | 112 | P 2 | TWD | 12 | VH1 -0.79 | TEH | TEC | | | 7 | COLD | 600UL |
| 125 | 57 | 0.32 | 81 | P 2 | TWD | 14 | VC3 +0.73 | TEC | TEH | | | 8 | HOT | 600UL |
| 125 | 83 | 0.39 | 145 | P 2 | TWD | 15 | VH1 -0.84 | TEH | TEC | | | 8 | COLD | 600UL |
| | | 0.77 | 135 | P 2 | TWD | 25 | DBH +2.05 | TEH | TEC | | | 8 | COLD | 600UL |
| 125 | 85 | 0.42 | 128 | P 2 | TWD | 16 | VH1 -0.82 | TEH | TEC | | | 7 | COLD | 600UL |
| | | 0.25 | 122 | P 2 | TWD | 11 | VH2 -0.91 | TEH | TEC | | | 7 | COLD | 600UL |
| 125 | 91 | 0.25 | 134 | P 2 | TWD | 10 | DBH +1.83 | TEH | TEC | | | 11 | COLD | 600UL |
| 125 | 97 | 0.58 | 131 | P 2 | TWD | 20 | VH1 -0.96 | TEH | TEC | | | 12 | COLD | 600UL |
| 126 | 62 | 0.70 | 109 | P 2 | TWD | 23 | 10H -0.98 | TEC | TEH | | | 4 | HOT | 600UL |
| 126 | 86 | 0.46 | 137 | P 2 | TWD | 17 | DBH +1.94 | TEH | TEC | | | 10 | COLD | 600UL |
| 126 | 90 | 0.42 | 122 | P 2 | TWD | 16 | DBH +1.96 | TEH | TEC | | | 10 | COLD | 600UL |
| 126 | 92 | 0.27 | 135 | P 2 | TWD | 10 | VH1 -0.84 | TEH | TEC | | | 12 | COLD | 600UL |
| 126 | 112 | 0.37 | 29 | P 2 | TWD | 16 | DBH +1.75 | TEC | TEH | | | 1 | HOT | 600UL |
| 127 | 53 | 0.48 | 69 | P 2 | TWD | 18 | VH1 -0.92 | TEC | TEH | | | 7 | HOT | 600UL |
| 127 | 59 | 0.43 | 106 | P 2 | TWD | 15 | VH1 -1.02 | TEC | TEH | | | 3 | HOT | 600UL |
| 127 | 67 | 0.36 | 108 | P 2 | TWD | 13 | VH1 -0.79 | TEC | TEH | | | 3 | HOT | 600UL |
| 127 | 75 | 0.42 | 152 | P 2 | TWD | 16 | VH1 -0.94 | TEH | TEC | | | 7 | COLD | 600UL |
| | | 0.25 | 139 | P 2 | TWD | 11 | VH1 +0.79 | TEH | TEC | | | 7 | COLD | 600UL |
| 127 | 87 | 0.44 | 111 | P 2 | TWD | 15 | 09H -1.01 | TEH | TEC | | | 9 | COLD | 600UL |
| | | 0.49 | 127 | P 2 | TWD | 17 | 10H -1.03 | TEH | TEC | | | 9 | COLD | 600UL |
| 127 | 95 | 0.33 | 149 | P 2 | TWD | 14 | VH1 -0.92 | TEH | TEC | | | 11 | COLD | 600UL |
| 127 | 99 | 0.39 | 125 | P 2 | TWD | 16 | VH1 -0.87 | TEH | TEC | | | 11 | COLD | 600UL |
| 127 | 101 | 0.19 | 103 | P 2 | TWD | 8 | VH3 +0.78 | TEH | TEC | | | 11 | COLD | 600UL |
| 127 | 107 | 0.53 | 119 | P 2 | TWD | 18 | VH1 -0.71 | TEC | TEH | | | 2 | HOT | 600UL |
| 127 | 109 | 0.27 | 102 | P 2 | TWD | 12 | VH1 -0.98 | TEC | TEH | | | 1 | HOT | 600UL |
| | | 0.56 | 121 | P 2 | TWD | 21 | 09H -0.99 | TEC | TEH | | | 1 | HOT | 600UL |

SG88 - MAI, MCI, MMI, MVI, SAI, SCI, SVI, 0-100%TWD

QUERY: QueryM1

| ROW | LINE | VOLTS | DEG | CHN | IND | %TW | LOCATION | | EXT | EXT | UTIL 1 | UTIL 2 | CAL # | LEG | PROBE |
|---|---|---|---|---|---|---|---|---|---|---|---|---|---|---|---|
| 127 | 115 | 0.37 | 137 | P 2 | TWD | 15 | VH1 | -0.93 | TEC | TEH | | | 1 | HOT | 600UL |
| 127 | 121 | 0.32 | 122 | P 2 | TWD | 13 | VH1 | -0.99 | TEC | TEH | | | 1 | HOT | 600UL |
| 127 | 125 | 0.54 | 117 | P 2 | TWD | 18 | VH1 | -0.86 | TEC | TEH | | | 6 | HOT | 600UL |
| 128 | 60 | 0.54 | 110 | P 2 | TWD | 19 | 10H | -0.97 | TEC | TEH | | | 4 | HOT | 600UL |
| 128 | 68 | 0.30 | 27 | P 2 | TWD | 12 | DBH | +1.51 | TEC | TEH | | | 4 | HOT | 600UL |
| 128 | 88 | 0.64 | 108 | P 2 | TWD | 21 | 10H | -1.10 | TEH | TEC | | | 9 | COLD | 600UL |
| 128 | 108 | 0.29 | 119 | P 2 | TWD | 11 | VH1 | -0.67 | TEC | TEH | | | 2 | HOT | 600UL |
| 128 | 110 | 0.26 | 88 | P 2 | TWD | 10 | VH1 | +0.78 | TEC | TEH | | | 2 | HOT | 600UL |
| 129 | 47 | 0.67 | 143 | P 2 | TWD | 24 | VH3 | -0.88 | TEC | TEH | | | 8 | HOT | 600UL |
| 129 | 63 | 0.31 | 127 | P 2 | TWD | 12 | 10H | -0.13 | TEC | TEH | | | 4 | HOT | 600UL |
| 129 | 67 | 0.33 | 46 | P 2 | TWD | 13 | DBH | -1.73 | TEC | TEH | | | 4 | HOT | 600UL |
| 129 | 73 | 0.46 | 153 | P 2 | TWD | 18 | VH1 | -0.75 | TEH | TEC | | | 8 | COLD | 600UL |
| 129 | 75 | 0.57 | 87 | P 2 | TWD | 20 | VH1 | -0.80 | TEH | TEC | | | 8 | COLD | 600UL |
| 129 | 87 | 0.41 | 152 | P 2 | TWD | 15 | VH1 | -0.91 | TEH | TEC | | | 10 | COLD | 600UL |
| 129 | 95 | 0.50 | 125 | P 2 | TWD | 17 | DBH | +2.09 | TEH | TEC | | | 12 | COLD | 600UL |
| | | 0.54 | 133 | P 2 | TWD | 18 | VH1 | -0.89 | TEH | TEC | | | 12 | COLD | 600UL |
| 129 | 109 | 0.27 | 153 | P 2 | TWD | 10 | VH1 | -0.76 | TEC | TEH | | | 2 | HOT | 600UL |
| 129 | 119 | 0.51 | 83 | P 2 | TWD | 18 | VH1 | -0.91 | TEC | TEH | | | 2 | HOT | 600UL |
| 129 | 121 | 0.36 | 155 | P 2 | TWD | 13 | VH1 | -0.81 | TEC | TEH | | | 2 | HOT | 600UL |
| 130 | 70 | 0.45 | 88 | P 2 | TWD | 16 | VH1 | -0.76 | TEC | TEH | | | 3 | HOT | 600UL |
| 130 | 74 | 0.80 | 113 | P 2 | TWD | 26 | 10H | -1.04 | TEH | TEC | | | 8 | COLD | 600UL |
| 130 | 94 | 0.48 | 147 | P 2 | TWD | 16 | 10H | -1.00 | TEH | TEC | | | 12 | COLD | 600UL |
| 130 | 106 | 0.47 | 129 | P 2 | TWD | 17 | VH1 | -0.79 | TEH | TEC | | | 14 | COLD | 600UL |
| 130 | 128 | 0.52 | 80 | P 2 | TWD | 18 | VH2 | -0.54 | TEC | TEH | | | 6 | HOT | 600UL |
| 131 | 77 | 0.60 | 23 | P 2 | TWD | 21 | DBH | +2.00 | TEH | TEC | | | 13 | COLD | 600UL |
| 131 | 83 | 0.24 | 118 | P 2 | TWD | 10 | DBH | -1.85 | TEH | TEC | | | 13 | COLD | 600UL |
| 131 | 89 | 0.68 | 127 | P 2 | TWD | 23 | 10H | +0.90 | TEH | TEC | | | 13 | COLD | 600UL |
| 131 | 127 | 0.52 | 126 | P 2 | TWD | 19 | 03C | +0.83 | TEH | TEC | | | 17 | COLD | 600UL |
| 132 | 94 | 0.63 | 78 | P 2 | TWD | 22 | 10H | +0.92 | TEH | TEC | | | 13 | COLD | 600UL |
| 133 | 61 | 0.39 | 129 | P 2 | TWD | 15 | VH1 | -0.98 | TEH | TEC | | | 14 | COLD | 600UL |
| 133 | 75 | 0.49 | 143 | P 2 | TWD | 18 | DBH | +1.91 | TEH | TEC | | | 14 | COLD | 600UL |
| 133 | 83 | 0.41 | 148 | P 2 | TWD | 15 | 10H | -1.02 | TEH | TEC | | | 14 | COLD | 600UL |
| 133 | 87 | 0.45 | 85 | P 2 | TWD | 17 | VH1 | -0.97 | TEH | TEC | | | 14 | COLD | 600UL |
| 133 | 99 | 0.29 | 90 | P 2 | TWD | 11 | VH1 | -0.89 | TEH | TEC | | | 14 | COLD | 600UL |
| 133 | 109 | 0.12 | 143 | 2 | SAI | | 07H | -7.41 TO-9.41 | 07H | 07H | 0.40 | 2.00 | 159 | HOT | 580PP |
| | | 0.09 | 122 | 2 | SAI | | 07H | -13.68 TO-15.84 | 07H | 07H | 0.40 | 2.16 | 159 | HOT | 580PP |
| | | 0.18 | 122 | 2 | SAI | | 07H | -16.47 TO-22.50 | 07H | 07H | 2.00 | 4.90 | 159 | HOT | 580PP |
| 133 | 115 | 0.50 | 128 | P 2 | TWD | 18 | 10H | +0.92 | TEH | TEC | | | 17 | COLD | 600UL |
| 134 | 68 | 0.29 | 119 | P 2 | TWD | 11 | 10H | -0.75 | TEH | TEC | LAR | | 14 | COLD | 600UL |

SG88 - MAI, MCI, MMI, MVI, SAI, SCI, SVI, 0-100%TWD

QUERY: QueryM1

| ROW | LINE | VOLTS | DEG | CHN | IND | %TW | LOCATION | | EXT | EXT | UTIL 1 | UTIL 2 | CAL # | LEG | PROBE |
|---|---|---|---|---|---|---|---|---|---|---|---|---|---|---|---|
| 134 | 84 | 0.34 | 38 | P 2 | TWD | 13 | 10H | -1.02 | TEH | TEC | | | 14 | COLD | 600UL |
| 134 | 86 | 0.51 | 104 | P 2 | TWD | 19 | 10H | -1.04 | TEH | TEC | | | 13 | COLD | 600UL |
| 134 | 100 | 0.44 | 159 | P 2 | TWD | 15 | 10H | +0.95 | TEH | TEC | | | 16 | COLD | 600UL |
| 135 | 81 | 0.61 | 140 | P 2 | TWD | 21 | VH1 | -0.83 | TEH | TEC | | | 14 | COLD | 600UL |
| 135 | 87 | 0.24 | 161 | P 2 | TWD | 10 | 10H | -0.94 | TEH | TEC | | | 13 | COLD | 600UL |
| 135 | 93 | 0.30 | 79 | P 2 | TWD | 12 | 10H | +0.88 | TEH | TEC | | | 13 | COLD | 600UL |
| 135 | 97 | 0.24 | 120 | P 2 | TWD | 10 | 10H | +0.94 | TEH | TEC | | | 13 | COLD | 600UL |
| | | 0.26 | 130 | P 2 | TWD | 10 | 10H | -1.06 | TEH | TEC | | | 13 | COLD | 600UL |
| 136 | 74 | 0.55 | 110 | P 2 | TWD | 20 | 10H | -1.01 | TEH | TEC | | | 13 | COLD | 600UL |
| 136 | 86 | 0.72 | 135 | P 2 | TWD | 23 | 10H | -1.07 | TEH | TEC | | | 14 | COLD | 600UL |
| 137 | 91 | 0.42 | 156 | P 2 | TWD | 16 | 10H | -1.08 | TEH | TEC | | | 14 | COLD | 600UL |
| 137 | 119 | 0.52 | 71 | P 2 | TWD | 17 | 01C | -0.99 | TEH | TEC | | | 18 | COLD | 600UL |
| 138 | 74 | 0.33 | 70 | P 2 | TWD | 13 | VH1 | -0.75 | TEH | TEC | | | 13 | COLD | 600UL |
| 138 | 78 | 0.38 | 94 | P 2 | TWD | 15 | VH1 | -0.71 | TEH | TEC | | | 13 | COLD | 600UL |
| 139 | 71 | 0.32 | 145 | P 2 | TWD | 13 | VH1 | -0.89 | TEH | TEC | | | 13 | COLD | 600UL |
| 139 | 105 | 0.49 | 131 | P 2 | TWD | 17 | 10H | +0.88 | TEH | TEC | | | 18 | COLD | 600UL |
| 140 | 88 | 0.27 | 147 | P 2 | TWD | 11 | DBH | +2.00 | TEH | TEC | | | 13 | COLD | 600UL |
| 141 | 65 | 0.48 | 139 | P 2 | TWD | 17 | 08C | +0.83 | TEH | TEC | | | 14 | COLD | 600UL |
| 141 | 67 | 0.68 | 123 | P 2 | TWD | 22 | VC1 | +0.85 | TEH | TEC | | | 14 | COLD | 600UL |
| 141 | 79 | 0.35 | 145 | P 2 | TWD | 14 | VC1 | +0.91 | TEH | TEC | | | 13 | COLD | 600UL |
| | | 0.87 | 75 | P 2 | TWD | 27 | DBC | +1.57 | TEH | TEC | | | 13 | COLD | 600UL |
| 142 | 72 | 0.71 | 87 | P 2 | TWD | 23 | DBC | +1.43 | TEH | TEC | | | 14 | COLD | 600UL |
| 142 | 82 | 0.76 | 134 | P 2 | TWD | 24 | DBC | +1.98 | TEH | TEC | | | 14 | COLD | 600UL |
| 142 | 86 | 0.26 | 154 | P 2 | TWD | 10 | DBH | +1.88 | TEH | TEC | | | 13 | COLD | 600UL |
| 142 | 90 | 0.28 | 129 | P 2 | TWD | 11 | DBH | +1.86 | TEH | TEC | | | 13 | COLD | 600UL |
| 142 | 104 | 0.34 | 19 | P 2 | TWD | 12 | DBH | +1.90 | TEH | TEC | | | 16 | COLD | 600UL |
| 142 | 110 | 0.54 | 54 | P 2 | TWD | 18 | DBH | +1.97 | TEH | TEC | | | 18 | COLD | 600UL |
| 143 | 73 | 0.19 | 64 | P 2 | TWD | 8 | 01H | -0.89 | TEH | TEC | | | 13 | COLD | 600UL |
| 143 | 87 | 0.43 | 121 | 2 | SAI | | 06H | +0.48 | 06H | 06H | 0.00 | 0.23 | 166 | HOT | 580PP |
| 143 | 89 | 0.24 | 49 | P 2 | TWD | 10 | DBH | -1.90 | TEH | TEC | | | 13 | COLD | 600UL |
| 143 | 109 | 0.30 | 136 | P 2 | TWD | 10 | DBH | -1.51 | TEH | TEC | | | 18 | COLD | 600UL |
| 144 | 74 | 0.57 | 106 | P 2 | TWD | 20 | VC1 | +0.90 | TEH | TEC | | | 14 | COLD | 600UL |
| 144 | 78 | 0.41 | 141 | P 2 | TWD | 15 | DBC | -1.58 | TEH | TEC | | | 14 | COLD | 600UL |
| 144 | 80 | 0.40 | 138 | P 2 | TWD | 16 | DBH | +1.99 | TEH | TEC | | | 13 | COLD | 600UL |
| 144 | 82 | 0.75 | 88 | P 2 | TWD | 25 | DBC | +1.48 | TEH | TEC | | | 13 | COLD | 600UL |
| 144 | 84 | 0.61 | 102 | P 2 | TWD | 21 | DBC | +1.31 | TEH | TEC | | | 13 | COLD | 600UL |
| 144 | 86 | 0.30 | 147 | P 2 | TWD | 12 | DBH | +1.90 | TEH | TEC | | | 13 | COLD | 600UL |
| 144 | 88 | 0.86 | 37 | P 2 | TWD | 27 | DBC | +1.38 | TEH | TEC | | | 13 | COLD | 600UL |
| 144 | 90 | 0.78 | 57 | P 2 | TWD | 24 | DBC | +1.27 | TEH | TEC | | | 14 | COLD | 600UL |

SG88 - MAI, MCI, MMI, MVI, SAI, SCI, SVI, 0-100%TWD

QUERY: QueryM1

| ROW | LINE | VOLTS | DEG | CHN | IND | %TW | LOCATION | | EXT | EXT | UTIL 1 | UTIL 2 | CAL # | LEG | PROBE |
|---|---|---|---|---|---|---|---|---|---|---|---|---|---|---|---|
| 144 | 96 | 0.34 | 139 | P 2 | TWD | 14 | DBH | +2.16 | TEH | TEC | | | 13 | COLD | 600UL |
| 144 | 106 | 1.01 | 91 | P 2 | TWD | 28 | DBC | +1.84 | TEH | TEC | | | 18 | COLD | 600UL |
| 145 | 73 | 0.44 | 130 | P 2 | TWD | 16 | 10H | -1.12 | TEH | TEC | | | 14 | COLD | 600UL |
| | | 1.01 | 106 | P 2 | TWD | 29 | DBH | +1.72 | TEH | TEC | | | 14 | COLD | 600UL |
| | | 0.63 | 133 | P 2 | TWD | 21 | VC1 | +0.92 | TEH | TEC | | | 14 | COLD | 600UL |
| | | 1.32 | 18 | P 2 | TWD | 33 | DBC | +1.57 | TEH | TEC | | | 14 | COLD | 600UL |
| 145 | 75 | 0.74 | 88 | P 2 | TWD | 23 | DBH | +1.89 | TEH | TEC | | | 14 | COLD | 600UL |
| | | 0.44 | 139 | P 2 | TWD | 16 | VH1 | -0.89 | TEH | TEC | | | 14 | COLD | 600UL |
| 145 | 79 | 0.39 | 147 | P 2 | TWD | 14 | DBC | +1.25 | TEH | TEC | | | 14 | COLD | 600UL |
| 145 | 81 | 0.49 | 146 | P 2 | TWD | 18 | VH1 | -0.85 | TEH | TEC | | | 13 | COLD | 600UL |
| | | 0.81 | 84 | P 2 | TWD | 26 | DBC | -1.32 | TEH | TEC | | | 13 | COLD | 600UL |
| 145 | 83 | 0.32 | 147 | P 2 | TWD | 12 | DBH | -1.74 | TEH | TEC | | | 14 | COLD | 600UL |
| | | 0.48 | 80 | P 2 | TWD | 17 | VC1 | +0.91 | TEH | TEC | | | 14 | COLD | 600UL |
| 145 | 89 | 0.48 | 94 | P 2 | TWD | 17 | VC1 | +0.83 | TEH | TEC | | | 14 | COLD | 600UL |
| | | 0.29 | 106 | P 2 | TWD | 11 | DBH | -1.72 | TEH | TEC | | | 14 | COLD | 600UL |
| 145 | 91 | 1.13 | 21 | P 2 | TWD | 30 | DBC | +1.51 | TEH | TEC | | | 14 | COLD | 600UL |
| | | 0.43 | 138 | P 2 | TWD | 16 | VH2 | +0.71 | TEH | TEC | | | 14 | COLD | 600UL |
| 146 | 100 | 0.82 | 145 | P 2 | TWD | 24 | DBH | -1.85 | TEH | TEC | | | 16 | COLD | 600UL |
| 147 | 85 | 0.79 | 96 | P 2 | TWD | 25 | DBC | +1.52 | TEH | TEC | | | 14 | COLD | 600UL |
| | | 0.72 | 139 | P 2 | TWD | 23 | VC1 | -0.83 | TEH | TEC | | | 14 | COLD | 600UL |
| | | 0.40 | 140 | P 2 | TWD | 15 | DBH | -2.04 | TEH | TEC | | | 14 | COLD | 600UL |
| | | 0.36 | 56 | P 2 | TWD | 14 | VH1 | +0.79 | TEH | TEC | | | 14 | COLD | 600UL |
| | | 0.80 | 111 | P 2 | TWD | 25 | VC1 | +0.14 | TEH | TEC | | | 14 | COLD | 600UL |
| | | 1.23 | 130 | P 2 | TWD | 32 | VC1 | +0.83 | TEH | TEC | | | 14 | COLD | 600UL |
| 147 | 89 | 0.36 | 121 | P 2 | TWD | 14 | VC2 | +0.81 | TEH | TEC | | | 14 | COLD | 600UL |
| | | 1.29 | 131 | P 2 | TWD | 32 | VC1 | +0.79 | TEH | TEC | | | 14 | COLD | 600UL |
| 147 | 91 | 0.58 | 145 | P 2 | TWD | 20 | VC1 | -0.82 | TEH | TEC | | | 14 | COLD | 600UL |
| 147 | 93 | 0.22 | 147 | P 2 | TWD | 9 | DBH | -1.75 | TEH | TEC | | | 14 | COLD | 600UL |
| | | 1.05 | 116 | P 2 | TWD | 29 | VC1 | +0.90 | TEH | TEC | | | 14 | COLD | 600UL |
| | | 0.38 | 123 | P 2 | TWD | 14 | VC1 | -0.54 | TEH | TEC | | | 14 | COLD | 600UL |
| | | 0.29 | 106 | P 2 | TWD | 11 | DBC | -1.57 | TEH | TEC | | | 14 | COLD | 600UL |

Total Tubes : 465
Total Records: 556

# Appendix 4

## Inspection Summary

## Steam Generator E-089

SG89 - MAI, MCI, MMI, MVI, SAI, SCI, SVI, 0-100%TWD

QUERY: QueryM1

| ROW | LINE | VOLTS | DEG | CHN | IND | %TW | LOCATION | | | | EXT | EXT | UTIL 1 | UTIL 2 | CAL # | LEG | PROBE |
|---|---|---|---|---|---|---|---|---|---|---|---|---|---|---|---|---|---|
| 1 | 175 | 0.22 | 19 | P 2 | TWD | 10 | DBH | +1.25 | | | DBH | TEH | LAR | | 14 | HOT | 600UL |
| 2 | 154 | 0.23 | 107 | 2 | SVI | | TSH | +7.15 | TO+7.39 | | TSH | TSH | 0.39 | 0.35 | 133 | HOT | 580PP |
| 2 | 158 | 0.17 | 111 | 2 | SVI | | TSH | +5.77 | TO+5.92 | | TSH | TSH | 0.31 | 0.29 | 133 | HOT | 580PP |
| 4 | 120 | 0.43 | 79 | 2 | SAI | | 07H | -0.02 | | | 07H | DBH | 0.71 | 0.18 | 130 | HOT | 580PP |
| 6 | 60 | 0.37 | 48 | P 2 | TWD | 17 | 02H | -1.35 | | | TEC | TEH | LOCOK | | 19 | HOT | 600UL |
| 7 | 175 | 0.31 | 56 | P 2 | TWD | 16 | 02C | +0.83 | | | TEH | TEC | | | 24 | COLD | 600UL |
| 9 | 33 | 1.25 | 13 | 2 | SAI | | 06H | +0.51 | | | 06H | 06H | 0.00 | 0.35 | 123 | HOT | 580PP |
| 9 | 39 | 0.41 | 65 | P 2 | TWD | 18 | 03H | +0.85 | | | TEH | TEC | | | 46 | COLD | 600UL |
| 10 | 52 | 0.34 | 90 | P 2 | TWD | 16 | 01C | +0.23 | | | TEC | TEH | | | 9 | HOT | 600UL |
| 11 | 119 | 0.30 | 65 | P 2 | TWD | 13 | 07H | +0.87 | | | TEC | TEH | | | 24 | HOT | 600UL |
| 11 | 141 | 0.56 | 26 | P 1 | SCI | | TSH | -0.08 | | | TSH | TSH | 0.64 | 0.16 | 43 | HOT | 600PP |
| 13 | 119 | 0.24 | 92 | 2 | SAI | | 06H | -0.18 | | | 06H | 06H | 0.30 | 0.18 | 129 | HOT | 580PP |
| 13 | 139 | 0.33 | 19 | P 1 | SCI | | TSH | -4.91 | | | TSH | TSH | 0.19 | 0.19 | 39 | HOT | 600PP |
| 14 | 116 | 0.36 | 87 | P 2 | TWD | 14 | 07H | -0.23 | | | TEC | TEH | | | 23 | HOT | 600UL |
| 14 | 174 | 0.11 | 86 | 2 | SAI | | 03H | -1.25 | | | 03H | 03H | 0.00 | 0.28 | 137 | HOT | 580PP |
| 16 | 42 | 0.25 | 17 | P 1 | SCI | | TSH | -0.07 | | | TSH | TSH | 0.13 | 0.20 | 61 | HOT | 600PP |
| 16 | 58 | 0.42 | 96 | P 2 | TWD | 17 | 07H | -0.16 | | | TEC | TEH | | | 22 | HOT | 600UL |
| 18 | 16 | 0.21 | 136 | 2 | SAI | | 06H | +0.36 | | | 06H | 06H | 0.35 | 0.25 | 117 | HOT | 580PP |
| 19 | 121 | 0.23 | 110 | 2 | SAI | | 04H | -0.51 | | | 04H | 04H | 0.67 | 0.20 | 129 | HOT | 580PP |
| 19 | 173 | 0.11 | 146 | P 2 | TWD | 6 | VSM | +0.81 | | | TEH | TEC | | | 24 | COLD | 600UL |
| 20 | 58 | 0.46 | 128 | P 2 | TWD | 19 | 01H | +0.93 | | | TEC | TEH | | | 22 | HOT | 600UL |
| 21 | 113 | 0.30 | 130 | P 2 | TWD | 13 | 07C | +0.80 | | | STH | TEC | | | 41 | COLD | 600UL |
| 22 | 2 | 0.54 | 139 | P 2 | TWD | 21 | VSM | -0.89 | | | TEH | TEC | | | 46 | COLD | 600UL |
| 22 | 60 | 0.73 | 16 | 2 | SAI | | TSH | -1.48 | | | TSH | TSH | 0.87 | 0.16 | 77 | HOT | 600PP |
| 22 | 66 | 0.47 | 16 | 2 | SAI | | TSH | -2.22 | | | TSH | TSH | 0.49 | 0.16 | 82 | HOT | 600PP |
| 22 | 126 | 0.15 | 108 | 2 | SAI | | 02H | +5.14 | | | 02H | 02H | 0.12 | 0.22 | 129 | HOT | 580PP |
| 23 | 169 | 0.42 | 67 | P 2 | TWD | 18 | 02H | +0.88 | | | TEH | TEC | | | 25 | COLD | 600UL |
| 24 | 48 | 0.79 | 26 | P 1 | SCI | | TSH | -0.09 | | | TSH | TSH | 0.98 | 0.21 | 86 | HOT | 580PP |
| 24 | 54 | 0.23 | 116 | P 1 | SCI | | TSH | +0.16 | | | TSH | TSH | 0.36 | 0.29 | 81 | HOT | 600PP |
| 24 | 112 | 0.17 | 131 | P 1 | MCI | | TSH | +0.00 | TO+0.12 | | TSH | TSH | 0.17 | 0.17 | 60 | HOT | 600PP |
| 25 | 115 | 0.19 | 125 | P 1 | SCI | | TSH | +0.14 | TO+0.31 | | TSH | TSH | 0.35 | 0.17 | 60 | HOT | 600PP |
| 26 | 118 | 0.21 | 93 | P 1 | MCI | | TSH | +0.12 | | | TSH | TSH | 0.25 | 0.24 | 63 | HOT | 600PP |
| 28 | 118 | 0.11 | 99 | P 1 | SCI | | TSH | +0.12 | | | TSH | TSH | 0.29 | 0.31 | 64 | HOT | 600PP |
| 29 | 49 | 0.20 | 77 | P 1 | SCI | | TSH | +0.04 | | | TSH | TSH | 0.30 | 0.19 | 86 | HOT | 580PP |
| 29 | 115 | 0.56 | 18 | 2 | SAI | | TSH | -0.80 | TO-0.89 | | TSH | TSH | 0.58 | 0.45 | 60 | HOT | 600PP |
| 30 | 54 | 0.14 | 105 | P 1 | MCI | | TSH | +0.12 | | | TSH | TSH | 0.36 | 0.24 | 81 | HOT | 600PP |
| 30 | 108 | 0.25 | 20 | P 2 | TWD | 13 | 06C | -0.86 | | | TEC | TEH | | | 30 | HOT | 600UL |
| 31 | 65 | 0.18 | 106 | 2 | SAI | | TSH | +1.09 | | | TSH | TSH | 0.00 | 0.15 | 94 | HOT | 580PP |

SG89 - MAI, MCI, MMI, MVI, SAI, SCI, SVI, 0-100%TWD

QUERY: QueryM1

| ROW | LINE | VOLTS | DEG | CHN | IND | %TW | LOCATION | | EXT | EXT | UTIL 1 | UTIL 2 | CAL # | LEG | PROBE |
|---|---|---|---|---|---|---|---|---|---|---|---|---|---|---|---|
| 31 | 71 | 0.54 | 77 | P 2 | TWD | 22 | DBH -1.73 | | TEH | TEC | | | 23 | COLD | 600UL |
| | | 0.29 | 147 | P 2 | TWD | 14 | DBC -1.73 | | TEH | TEC | | | 23 | COLD | 600UL |
| | | 0.26 | 111 | P 2 | TWD | 13 | DBC +1.79 | | TEH | TEC | | | 23 | COLD | 600UL |
| 31 | 117 | 0.31 | 142 | P 2 | TWD | 13 | 07C +0.41 | | TEC | TEH | | | 24 | HOT | 600UL |
| 34 | 54 | 0.86 | 13 | 2 | SAI | | 07H -0.13 | | 07H | 07H | 0.00 | 0.16 | 138 | HOT | 580PP |
| 35 | 105 | 0.72 | 23 | 2 | SAI | | TEH +1.89 | | TEH | TEH | 1.16 | 0.20 | 116 | HOT | 580PP |
| | | 2.04 | 29 | 2 | SAI | | TEH +3.69 | | TEH | TEH | 3.53 | 0.41 | 116 | HOT | 580PP |
| | | 1.44 | 22 | 2 | SAI | | TEH +4.67 | | TEH | TEH | 1.74 | 0.35 | 116 | HOT | 580PP |
| | | 1.33 | 26 | 2 | SAI | | TEH +4.92 | | TEH | TEH | 1.26 | 0.17 | 116 | HOT | 580PP |
| | | 2.17 | 30 | 2 | SAI | | TEH +5.56 | | TEH | TEH | 3.04 | 0.47 | 116 | HOT | 580PP |
| | | 2.73 | 26 | 2 | SAI | | TSH -6.79 | | TSH | TSH | 2.33 | 0.34 | 158 | HOT | 580PP |
| | | 3.87 | 32 | 2 | MAI | | TSH -9.43 | | TSH | TSH | 5.98 | 0.92 | 158 | HOT | 580PP |
| 37 | 75 | 0.72 | 104 | P 2 | TWD | 25 | DBC -1.27 | | TEC | TEH | | | 33 | HOT | 600UL |
| | | 0.45 | 130 | P 2 | TWD | 19 | DBC +1.70 | | TEC | TEH | | | 33 | HOT | 600UL |
| 37 | 107 | 0.40 | 16 | 2 | SAI | | TSH -5.75 | TO-5.83 | TSH | TSH | 0.28 | 0.34 | 60 | HOT | 600PP |
| 38 | 4 | 0.37 | 65 | P 2 | TWD | 16 | 02C -0.94 | | TEH | TEC | | | 51 | COLD | 600UL |
| | | 0.35 | 56 | P 2 | TWD | 15 | 01C +0.06 | | TEH | TEC | | | 51 | COLD | 600UL |
| 38 | 52 | 0.13 | 130 | 2 | SAI | | 02H +6.61 | | 02H | 02H | 0.39 | 0.62 | 135 | HOT | 580PP |
| 38 | 66 | 0.33 | 155 | P 2 | TWD | 14 | VSM -0.72 | | TEC | TEH | | | 15 | HOT | 600UL |
| 38 | 102 | 1.15 | 75 | P 2 | TWD | 34 | DBH -1.75 | | TEC | TEH | | | 40 | HOT | 600UL |
| | | 0.28 | 52 | P 2 | TWD | 13 | DBH +1.69 | | TEC | TEH | | | 40 | HOT | 600UL |
| 38 | 164 | 0.28 | 109 | 2 | SAI | | 06H +0.20 | | 06H | 06H | 0.52 | 0.15 | 136 | HOT | 580PP |
| 38 | 166 | 0.40 | 69 | P 2 | TWD | 17 | VSM -0.82 | | TEH | TEC | | | 25 | COLD | 600UL |
| 39 | 37 | 0.51 | 22 | P 1 | SCI | | TSH -0.04 | | TSH | TSH | 0.17 | 0.20 | 61 | HOT | 600PP |
| 39 | 53 | 0.34 | 96 | 2 | SAI | | TSH +0.87 | | TSH | TSH | 0.50 | 0.27 | 85 | HOT | 580PP |
| 39 | 73 | 0.66 | 118 | P 2 | TWD | 25 | DBC -1.85 | | TEH | TEC | | | 23 | COLD | 600UL |
| 40 | 62 | 0.32 | 28 | P 2 | TWD | 14 | DBC -0.10 | | TEC | TEH | | | 15 | HOT | 600UL |
| 41 | 73 | 0.11 | 15 | P 2 | TWD | 7 | DBC -2.14 | | TEH | TEC | | | 21 | COLD | 600UL |
| 41 | 75 | 0.49 | 74 | P 2 | TWD | 19 | DBC +1.54 | | TEC | TEH | | | 33 | HOT | 600UL |
| 41 | 103 | 0.40 | 16 | 2 | SAI | | TSH -0.68 | | TSH | TSH | 0.60 | 0.15 | 103 | HOT | 580PP |
| | | 0.29 | 142 | P 2 | TWD | 13 | VSM +0.80 | | TEC | TEH | | | 40 | HOT | 600UL |
| 41 | 159 | 0.34 | 78 | P 2 | TWD | 14 | 01H +1.16 | | TEH | TEC | | | 27 | COLD | 600UL |
| 42 | 110 | 0.67 | 74 | P 2 | TWD | 23 | VSM -0.24 | | TEC | TEH | | | 31 | HOT | 600UL |
| | | 0.87 | 116 | P 2 | TWD | 27 | VSM +0.93 | | TEC | TEH | | | 31 | HOT | 600UL |
| 42 | 168 | 0.53 | 148 | P 2 | TWD | 23 | VSM +1.06 | | TEH | TEC | | | 24 | COLD | 600UL |
| 42 | 170 | 0.74 | 92 | P 2 | TWD | 28 | VSM -0.30 | | TEH | TEC | | | 24 | COLD | 600UL |
| 43 | 79 | 0.81 | 74 | P 2 | TWD | 25 | DBH +1.74 | | TEC | TEH | | | 32 | HOT | 600UL |
| 43 | 101 | 0.72 | 65 | P 2 | TWD | 26 | DBC +1.74 | | TEC | TEH | | | 40 | HOT | 600UL |
| 44 | 18 | 0.35 | 150 | P 2 | TWD | 16 | VSM -0.83 | | TEH | TEC | | | 54 | COLD | 600UL |
| | | 0.18 | 53 | P 2 | TWD | 9 | VSM +0.65 | | TEH | TEC | LAR | | 54 | COLD | 600UL |
| 44 | 54 | 0.16 | 81 | 2 | SAI | | TSH +1.33 | | TSH | TSH | 0.40 | 0.14 | 90 | HOT | 580PP |
| 44 | 74 | 0.44 | 86 | P 2 | TWD | 17 | DBC -1.70 | | TEC | TEH | | | 33 | HOT | 600UL |
| | | 0.27 | 7 | P 2 | TWD | 12 | DBC +1.94 | | TEC | TEH | LAR | | 33 | HOT | 600UL |
| 44 | 100 | 1.13 | 107 | P 2 | TWD | 27 | DBC +1.67 | | TEC | TEH | | | 41 | HOT | 600UL |
| 44 | 108 | 0.94 | 119 | P 2 | TWD | 32 | VSM -0.87 | | TEC | TEH | | | 30 | HOT | 600UL |

SG89 - MAI, MCI, MMI, MVI, SAI, SCI, SVI, 0-100%TWD

QUERY: QueryM1

| ROW | LINE | VOLTS | DEG | CHN | IND | %TW | LOCATION | | EXT | EXT | UTIL 1 | UTIL 2 | CAL # | LEG | PROBE |
|---|---|---|---|---|---|---|---|---|---|---|---|---|---|---|---|
| 44 | 112 | 0.45 | 143 | P 2 | TWD | 23 | VSM | -0.86 | TEC | TEH | | | 28 | HOT | 600UL |
| 45 | 73 | 0.20 | 133 | P 2 | TWD | 11 | DBC | -2.03 | TEH | TEC | | | 21 | COLD | 600UL |
| 45 | 99 | 0.57 | 46 | P 2 | TWD | 23 | DBC | +1.82 | TEC | TEH | | | 40 | HOT | 600UL |
| | | 0.96 | 71 | P 2 | TWD | 31 | DBH | -1.90 | TEC | TEH | | | 40 | HOT | 600UL |
| | | 0.89 | 57 | P 2 | TWD | 30 | DBC | -1.75 | TEC | TEH | | | 40 | HOT | 600UL |
| 45 | 103 | 0.43 | 120 | P 2 | TWD | 18 | VSM | +0.97 | TEC | TEH | | | 40 | HOT | 600UL |
| 45 | 145 | 0.28 | 55 | P 2 | TWD | 12 | VSM | -0.75 | TEH | TEC | | | 33 | COLD | 600UL |
| 45 | 167 | 0.51 | 54 | P 2 | TWD | 22 | VSM | +0.89 | TEH | TEC | | | 24 | COLD | 600UL |
| 46 | 104 | 0.69 | 136 | P 2 | TWD | 26 | VSM | -0.84 | TEC | TEH | | | 40 | HOT | 600UL |
| | | 0.41 | 154 | P 2 | TWD | 18 | VSM | +0.25 | TEC | TEH | | | 40 | HOT | 600UL |
| 46 | 128 | 0.30 | 115 | P 2 | TWD | 18 | VSM | -0.93 | TEC | TEH | | | 17 | HOT | 600UL |
| 46 | 156 | 0.41 | 122 | P 2 | TWD | 18 | VSM | -0.87 | TEH | TEC | | | 29 | COLD | 600UL |
| | | 0.22 | 144 | P 2 | TWD | 11 | VSM | +0.91 | TEH | TEC | | | 29 | COLD | 600UL |
| 46 | 162 | 0.29 | 103 | P 2 | TWD | 13 | VSM | +0.87 | TEH | TEC | | | 26 | COLD | 600UL |
| 47 | 33 | 0.46 | 39 | P 2 | TWD | 17 | DBH | +1.89 | TEH | TEC | | | 48 | COLD | 600UL |
| 47 | 45 | 1.69 | 23 | 2 | SAI | | TSH | -5.84 | TSH | TSH | 1.72 | 0.35 | 65 | HOT | 600PP |
| 47 | 49 | 0.41 | 136 | P 1 | MCI | | TSH | -0.00 | TSH | TSH | 0.43 | 0.53 | 85 | HOT | 580PP |
| 47 | 101 | 0.67 | 95 | P 2 | TWD | 25 | DBC | +1.75 | TEC | TEH | | | 40 | HOT | 600UL |
| 47 | 121 | 0.26 | 147 | P 2 | TWD | 8 | VSM | -0.97 | TEC | TEH | | | 23 | HOT | 600UL |
| 48 | 6 | 0.60 | 104 | P 2 | TWD | 23 | 08C | -1.85 | TEH | TEC | LOCOK | | 51 | COLD | 600UL |
| 48 | 8 | 0.24 | 110 | P 2 | TWD | 12 | 02C | +0.86 | TEH | TEC | | | 51 | COLD | 600UL |
| 48 | 34 | 0.27 | 33 | P 2 | TWD | 12 | VSM | -0.59 | TEH | TEC | | | 47 | COLD | 600UL |
| 48 | 66 | 0.76 | 157 | P 2 | TWD | 24 | VSM | -0.93 | TEC | TEH | | | 16 | HOT | 600UL |
| 48 | 98 | 0.73 | 137 | P 2 | TWD | 20 | DBH | +1.85 | TEC | TEH | | | 41 | HOT | 600UL |
| | | 1.55 | 119 | P 2 | TWD | 33 | DBH | +0.00 | TEC | TEH | LAR | | 41 | HOT | 600UL |
| 48 | 100 | 0.46 | 140 | P 2 | TWD | 14 | DBC | +1.77 | TEC | TEH | | | 41 | HOT | 600UL |
| 48 | 118 | 0.47 | 116 | P 2 | TWD | 23 | 04H | -1.04 | TEC | TEH | LAR | | 28 | HOT | 600UL |
| 49 | 49 | 0.31 | 59 | P 2 | TWD | 14 | 08H | +1.49 | TEC | TEH | LOCOK | | 19 | HOT | 600UL |
| 49 | 55 | 0.29 | 120 | P 2 | TWD | 11 | VSM | -0.70 | TEH | TEC | | | 62 | COLD | 580SF |
| 49 | 65 | 0.42 | 119 | P 2 | TWD | 16 | VSM | -0.74 | TEC | TEH | | | 16 | HOT | 600UL |
| 49 | 99 | 0.89 | 120 | P 2 | TWD | 23 | DBC | -1.56 | TEC | TEH | | | 41 | HOT | 600UL |
| | | 0.55 | 110 | P 2 | TWD | 16 | DBH | -1.79 | TEC | TEH | | | 41 | HOT | 600UL |
| 49 | 109 | 0.38 | 113 | P 2 | TWD | 15 | 08H | -1.06 | TEC | TEH | | | 31 | HOT | 600UL |
| 49 | 111 | 0.54 | 71 | P 2 | TWD | 24 | 08H | -1.27 | TEC | TEH | LOCOK | | 30 | HOT | 600UL |
| 49 | 113 | 0.42 | 44 | P 2 | TWD | 17 | 08H | -0.99 | STH | TEC | | | 43 | COLD | 600UL |
| 49 | 145 | 0.66 | 36 | P 2 | TWD | 24 | 08H | -1.07 | TEH | TEC | | | 33 | COLD | 600UL |
| 50 | 44 | 0.39 | 122 | P 2 | TWD | 16 | VSM | -0.83 | TEH | TEC | | | 4 | COLD | 600UL |
| 50 | 52 | 0.17 | 130 | P 1 | SCI | | TSH | -0.00 | TSH | TSH | 0.00 | 0.26 | 86 | HOT | 580PP |
| 50 | 58 | 0.42 | 101 | P 2 | TWD | 17 | 02H | -1.19 | TEC | TEH | | | 22 | HOT | 600UL |
| 50 | 64 | 0.44 | 59 | P 2 | TWD | 17 | 08H | +1.02 | TEC | TEH | | | 16 | HOT | 600UL |

SG89 - MAI, MCI, MMI, MVI, SAI, SCI, SVI, 0-100%TWD

QUERY: QueryM1

| ROW | LINE | VOLTS | DEG | CHN | IND | %TW | LOCATION | | EXT | EXT | UTIL 1 | UTIL 2 | CAL # | LEG | PROBE |
|---|---|---|---|---|---|---|---|---|---|---|---|---|---|---|---|
| 50 | 74 | 0.38 | 105 | P 2 | TWD | 16 | DBC | +1.54 | TEC | TEH | | | 33 | HOT | 600UL |
| | | 0.26 | 142 | P 2 | TWD | 11 | DBC | -1.70 | TEC | TEH | | | 33 | HOT | 600UL |
| 50 | 76 | 0.45 | 103 | P 2 | TWD | 18 | DBC | -1.72 | TEC | TEH | | | 33 | HOT | 600UL |
| 50 | 82 | 0.72 | 71 | P 2 | TWD | 23 | DBC | +1.79 | TEC | TEH | | | 32 | HOT | 600UL |
| | | 0.30 | 114 | P 2 | TWD | 11 | DBH | -1.73 | TEC | TEH | | | 32 | HOT | 600UL |
| | | 0.29 | 152 | P 2 | TWD | 12 | DBC | -1.89 | TEC | TEH | | | 32 | HOT | 600UL |
| 50 | 98 | 1.14 | 133 | P 2 | TWD | 34 | DBH | -1.67 | TEC | TEH | | | 40 | HOT | 600UL |
| 50 | 100 | 0.38 | 86 | P 2 | TWD | 17 | 01H | +0.93 | TEC | TEH | | | 40 | HOT | 600UL |
| 51 | 61 | 0.40 | 155 | P 2 | TWD | 18 | 08C | -0.73 | TEC | TEH | | | 21 | HOT | 600UL |
| 51 | 75 | 0.54 | 115 | P 2 | TWD | 20 | DBC | -1.80 | STH | TEC | | | 42 | COLD | 600UL |
| 51 | 95 | 0.40 | 76 | P 2 | TWD | 18 | DBC | +1.80 | TEC | TEH | | | 40 | HOT | 600UL |
| 51 | 97 | 0.86 | 58 | P 2 | TWD | 29 | DBC | -2.00 | TEC | TEH | | | 40 | HOT | 600UL |
| | | 0.41 | 61 | P 2 | TWD | 18 | DBH | -2.00 | TEC | TEH | | | 40 | HOT | 600UL |
| 51 | 99 | 1.02 | 97 | P 2 | TWD | 32 | DBC | -2.00 | TEC | TEH | | | 40 | HOT | 600UL |
| | | 0.56 | 116 | P 2 | TWD | 22 | VSM | +0.84 | TEC | TEH | | | 40 | HOT | 600UL |
| | | 0.30 | 68 | P 2 | TWD | 14 | VH3 | +0.78 | TEC | TEH | | | 40 | HOT | 600UL |
| | | 0.40 | 29 | P 2 | TWD | 18 | VC3 | +0.82 | TEC | TEH | | | 40 | HOT | 600UL |
| | | 0.13 | 78 | P 2 | TWD | 6 | VC3 | -0.60 | TEC | TEH | | | 40 | HOT | 600UL |
| 52 | 18 | 0.45 | 135 | P 2 | TWD | 19 | VH3 | -1.04 | TEH | TEC | | | 54 | COLD | 600UL |
| 52 | 76 | 0.34 | 61 | P 2 | TWD | 13 | DBC | -1.50 | TEC | TEH | | | 32 | HOT | 600UL |
| 52 | 80 | 0.47 | 79 | P 2 | TWD | 17 | DBC | -2.00 | TEC | TEH | | | 32 | HOT | 600UL |
| 52 | 84 | 0.27 | 42 | P 2 | TWD | 10 | DBH | -1.76 | TEC | TEH | | | 32 | HOT | 600UL |
| 52 | 92 | 0.76 | 146 | P 2 | TWD | 20 | DBC | +1.86 | TEC | TEH | | | 41 | HOT | 600UL |
| | | 1.41 | 109 | P 2 | TWD | 31 | DBH | -1.64 | TEC | TEH | | | 41 | HOT | 600UL |
| | | 0.44 | 109 | P 2 | TWD | 13 | DBH | +1.43 | TEC | TEH | | | 41 | HOT | 600UL |
| 52 | 96 | 0.39 | 151 | P 2 | TWD | 12 | DBH | -1.40 | TEC | TEH | | | 41 | HOT | 600UL |
| 53 | 77 | 0.39 | 106 | P 2 | TWD | 14 | DBC | -1.80 | TEC | TEH | | | 32 | HOT | 600UL |
| 53 | 83 | 0.87 | 82 | P 2 | TWD | 26 | DBC | -1.82 | TEC | TEH | | | 32 | HOT | 600UL |
| | | 0.35 | 58 | P 2 | TWD | 13 | DBH | +1.71 | TEC | TEH | | | 32 | HOT | 600UL |
| 53 | 141 | 0.34 | 84 | P 2 | TWD | 14 | VC3 | +0.83 | TEH | TEC | | | 33 | COLD | 600UL |
| 54 | 82 | 1.18 | 81 | P 2 | TWD | 33 | DBC | +1.71 | TEC | TEH | | | 33 | HOT | 600UL |
| 54 | 92 | 0.63 | 131 | P 2 | TWD | 24 | DBC | +1.88 | TEC | TEH | | | 40 | HOT | 600UL |
| | | 1.43 | 88 | P 2 | TWD | 37 | DBH | -1.61 | TEC | TEH | | | 40 | HOT | 600UL |
| 54 | 94 | 0.94 | 124 | P 2 | TWD | 24 | DBH | -1.32 | TEC | TEH | | | 41 | HOT | 600UL |
| 54 | 128 | 0.30 | 60 | P 2 | TWD | 18 | 02H | -1.24 | TEC | TEH | | | 17 | HOT | 600UL |
| 55 | 69 | 0.17 | 107 | 2 | SAI | | TSH | +0.85 | TSH | TSH | 0.00 | 0.15 | 94 | HOT | 580PP |
| 55 | 81 | 1.07 | 120 | P 2 | TWD | 31 | DBC | -1.65 | TEC | TEH | | | 33 | HOT | 600UL |
| 55 | 83 | 1.24 | 106 | P 2 | TWD | 34 | DBC | -1.74 | TEC | TEH | | | 33 | HOT | 600UL |
| 55 | 95 | 1.42 | 73 | P 2 | TWD | 37 | DBC | +1.93 | TEC | TEH | | | 40 | HOT | 600UL |
| 55 | 151 | 0.40 | 67 | P 2 | TWD | 18 | VH3 | +0.85 | TEH | TEC | | | 31 | COLD | 600UL |
| 56 | 34 | 0.38 | 35 | P 2 | TWD | 17 | VC3 | +0.80 | TEH | TEC | | | 47 | COLD | 600UL |
| | | 0.42 | 122 | P 2 | TWD | 18 | VH3 | -0.65 | TEH | TEC | | | 47 | COLD | 600UL |
| | | 0.38 | 57 | P 2 | TWD | 16 | VH3 | +0.76 | TEH | TEC | | | 47 | COLD | 600UL |
| 56 | 64 | 0.23 | 120 | P 2 | TWD | 11 | VH3 | -0.96 | TEC | TEH | | | 15 | HOT | 600UL |
| 56 | 82 | 0.39 | 50 | P 2 | TWD | 15 | VH3 | +0.80 | TEC | TEH | | | 32 | HOT | 600UL |

SG89 - MAI, MCI, MMI, MVI, SAI, SCI, SVI, 0-100%TWD

QUERY: QueryM1

| ROW | LINE | VOLTS | DEG | CHN | IND | %TW | LOCATION | | EXT | EXT | UTIL 1 | UTIL 2 | CAL # | LEG | PROBE |
|---|---|---|---|---|---|---|---|---|---|---|---|---|---|---|---|
| | | 0.85 | 92 | P 2 | TWD | 26 | VH3 | -0.76 | TEC | TEH | | | 32 | HOT | 600UL |
| 56 | 84 | 0.57 | 141 | P 2 | TWD | 21 | DBC | -1.80 | STH | TEC | | | 42 | COLD | 600UL |
| | | 0.44 | 104 | P 2 | TWD | 17 | DBH | +1.82 | STH | TEC | | | 42 | COLD | 600UL |
| 56 | 88 | 1.29 | 116 | P 2 | TWD | 34 | DBH | +1.75 | TEC | TEH | | | 33 | HOT | 600UL |
| 56 | 90 | 0.36 | 113 | P 2 | TWD | 14 | DBC | +1.61 | TEC | TEH | | | 37 | HOT | 600UL |
| | | 1.43 | 66 | P 2 | TWD | 35 | DBH | -1.24 | TEC | TEH | | | 37 | HOT | 600UL |
| | | 0.29 | 150 | P 2 | TWD | 11 | DBH | +1.41 | TEC | TEH | | | 37 | HOT | 600UL |
| 56 | 94 | 0.65 | 60 | P 2 | TWD | 25 | DBH | -1.75 | TEC | TEH | | | 40 | HOT | 600UL |
| 56 | 104 | 0.50 | 159 | P 2 | TWD | 17 | DBC | -0.47 | TEC | TEH | | | 41 | HOT | 600UL |
| 56 | 108 | 0.32 | 58 | P 2 | TWD | 13 | VSM | +0.65 | TEC | TEH | | | 31 | HOT | 600UL |
| 56 | 146 | 0.52 | 25 | P 2 | TWD | 20 | VH3 | -0.68 | TEH | TEC | | | 30 | COLD | 600UL |
| 56 | 152 | 0.35 | 78 | P 2 | TWD | 16 | DBH | +1.02 | TEH | TEC | | | 29 | COLD | 600UL |
| 56 | 158 | 0.48 | 87 | P 2 | TWD | 21 | VH3 | -0.63 | TEH | TEC | | | 29 | COLD | 600UL |
| 56 | 162 | 0.66 | 99 | P 2 | TWD | 24 | VH3 | -0.85 | TEH | TEC | | | 27 | COLD | 600UL |
| 57 | 69 | 0.14 | 113 | 2 | MAI | | TSH | +2.02 TO+2.96 | TSH | TSH | 0.24 | 0.21 | 93 | HOT | 580PP |
| 57 | 79 | 0.54 | 84 | P 2 | TWD | 19 | DBC | -1.90 | TEC | TEH | | | 32 | HOT | 600UL |
| 57 | 81 | 0.13 | 105 | 2 | SAI | | TSH | +1.22 | TSH | TSH | 0.00 | 0.22 | 98 | HOT | 580PP |
| 57 | 83 | 0.98 | 72 | P 2 | TWD | 28 | DBC | -1.82 | TEC | TEH | | | 32 | HOT | 600UL |
| 57 | 105 | 0.27 | 18 | P 1 | SCI | | TSH | -0.12 | TSH | TSH | 0.40 | 0.19 | 102 | HOT | 580PP |
| 58 | 16 | 0.55 | 127 | P 2 | TWD | 22 | VH3 | -0.71 | TEH | TEC | | | 54 | COLD | 600UL |
| 58 | 82 | 0.35 | 106 | P 2 | TWD | 15 | DBH | +1.54 | TEC | TEH | | | 33 | HOT | 600UL |
| 58 | 88 | 1.49 | 112 | P 2 | TWD | 36 | DBH | +1.72 | TEC | TEH | | | 32 | HOT | 600UL |
| 58 | 90 | 0.77 | 73 | P 2 | TWD | 28 | DBH | -1.83 | TEC | TEH | | | 36 | HOT | 600UL |
| 59 | 25 | 0.56 | 135 | P 2 | TWD | 24 | VH3 | -0.73 | TEH | TEC | | | 50 | COLD | 600UL |
| 59 | 99 | 0.26 | 103 | P 1 | SCI | | TSH | +0.12 | TSH | TSH | 0.00 | 0.36 | 102 | HOT | 580PP |
| 59 | 143 | 0.25 | 149 | P 2 | TWD | 12 | VH3 | -0.71 | TEH | TEC | | | 33 | COLD | 600UL |
| 60 | 88 | 0.69 | 146 | P 2 | TWD | 22 | DBH | +1.40 | TEC | TEH | | | 32 | HOT | 600UL |
| 60 | 94 | 0.37 | 134 | P 2 | TWD | 16 | DBC | -2.02 | TEC | TEH | | | 40 | HOT | 600UL |
| 61 | 87 | 0.53 | 83 | P 1 | SCI | | TSH | +0.04 | TSH | TSH | 0.53 | 0.90 | 98 | HOT | 580PP |
| 61 | 93 | 0.27 | 132 | P 1 | SCI | | TSH | +0.05 | TSH | TSH | 0.00 | 0.19 | 106 | HOT | 580PP |
| 62 | 84 | 0.43 | 151 | P 2 | TWD | 17 | DBC | -1.93 | TEC | TEH | | | 33 | HOT | 600UL |
| | | 0.71 | 122 | P 2 | TWD | 24 | DBH | -1.81 | TEC | TEH | | | 33 | HOT | 600UL |
| 62 | 90 | 0.21 | 137 | P 1 | SCI | | TSH | +0.11 | TSH | TSH | 0.25 | 0.16 | 102 | HOT | 580PP |
| 62 | 94 | 0.69 | 147 | P 2 | TWD | 19 | DBC | +1.90 | TEC | TEH | | | 41 | HOT | 600UL |
| 62 | 126 | 0.22 | 78 | P 2 | TWD | 10 | VH3 | +0.77 | TEC | TEH | | | 18 | HOT | 600UL |
| 63 | 35 | 0.25 | 150 | P 2 | TWD | 10 | VH3 | -0.54 | TEH | TEC | | | 48 | COLD | 600UL |
| 63 | 45 | 0.34 | 66 | P 2 | TWD | 15 | VSM | -0.76 | TEH | TEC | | | 4 | COLD | 600UL |
| 63 | 61 | 0.41 | 50 | P 2 | TWD | 17 | 03H | -0.95 | TEC | TEH | | | 22 | HOT | 600UL |
| 63 | 79 | 0.82 | 86 | P 2 | TWD | 27 | DBC | -1.86 | TEC | TEH | | | 33 | HOT | 600UL |
| 63 | 83 | 0.78 | 149 | P 2 | TWD | 26 | DBC | -1.93 | TEC | TEH | | | 33 | HOT | 600UL |

SG89 - MAI, MCI, MMI, MVI, SAI, SCI, SVI, 0-100%TWD

QUERY: QueryM1

| ROW | LINE | VOLTS | DEG | CHN | IND | %TW | LOCATION | | EXT | EXT | UTIL 1 | UTIL 2 | CAL # | LEG | PROBE |
|---|---|---|---|---|---|---|---|---|---|---|---|---|---|---|---|
| 63 | 87 | 0.68 | 128 | P 2 | TWD 24 | DBH | | -1.60 | STH | TEC | | | 42 | COLD | 600UL |
| 63 | 91 | 0.28 | 24 | 2 | SAI | TSH | | -0.97 | TSH | TSH | 0.71 | 0.23 | 102 | HOT | 580PP |
| 63 | 145 | 0.43 | 57 | P 2 | TWD 16 | VH3 | | +0.85 | TEH | TEC | | | 30 | COLD | 600UL |
| 64 | 10 | 0.52 | 137 | P 2 | TWD 21 | 03C | | -0.97 | TEH | TEC | | | 51 | COLD | 600UL |
| 64 | 82 | 0.65 | 115 | P 2 | TWD 23 | DBC | | +1.89 | TEC | TEH | | | 33 | HOT | 600UL |
| 64 | 84 | 0.41 | 102 | P 2 | TWD 15 | DBH | | +1.87 | TEC | TEH | | | 32 | HOT | 600UL |
| 64 | 136 | 0.31 | 140 | P 2 | TWD 15 | VC3 | | -1.16 | TEH | TEC | | | 35 | COLD | 600UL |
| 65 | 37 | 0.41 | 89 | P 2 | TWD 19 | VSM | | -0.70 | TEH | TEC | | | 45 | COLD | 600UL |
| 65 | 79 | 0.18 | 87 | 2 | SAI | TSH | | +1.80 | TSH | TSH | 0.00 | 0.19 | 98 | HOT | 580PP |
| | | 0.39 | 146 | P 2 | TWD 15 | DBC | | -1.50 | TEC | TEH | | | 32 | HOT | 600UL |
| 65 | 81 | 0.24 | 114 | 2 | MAI | TSH | | +0.65 | TSH | TSH | 0.39 | 0.36 | 98 | HOT | 580PP |
| 65 | 89 | 0.66 | 113 | P 2 | TWD 26 | DBH | | +1.83 | TEC | TEH | | | 36 | HOT | 600UL |
| 65 | 155 | 0.42 | 70 | P 2 | TWD 17 | VH3 | | -0.72 | TEH | TEC | | | 28 | COLD | 600UL |
| 66 | 80 | 0.23 | 65 | P 2 | TWD 9 | DBC | | +1.90 | TEC | TEH | | | 32 | HOT | 600UL |
| 66 | 84 | 0.45 | 32 | P 2 | TWD 18 | DBH | | -1.89 | TEC | TEH | | | 33 | HOT | 600UL |
| 66 | 94 | 0.45 | 44 | P 2 | TWD 19 | DBC | | +1.75 | TEC | TEH | | | 40 | HOT | 600UL |
| 66 | 138 | 0.31 | 113 | P 2 | TWD 16 | 08C | | -0.97 | TEH | TEC | | | 34 | COLD | 600UL |
| 66 | 144 | 0.46 | 72 | P 2 | TWD 21 | VH3 | | -0.94 | TEH | TEC | | | 32 | COLD | 600UL |
| | | 0.52 | 100 | P 2 | TWD 23 | VSM | | -0.85 | TEH | TEC | | | 32 | COLD | 600UL |
| | | 0.58 | 77 | P 2 | TWD 25 | 06C | | -0.87 | TEH | TEC | | | 32 | COLD | 600UL |
| 67 | 31 | 0.82 | 89 | 2 | SAI | 04H | | +0.59 | 04H | 04H | 0.75 | 0.38 | 122 | HOT | 580PP |
| 67 | 83 | 0.23 | 132 | P 2 | TWD 11 | DBH | | -1.97 | TEC | TEH | | | 33 | HOT | 600UL |
| | | 0.70 | 128 | P 2 | TWD 24 | DBC | | -1.95 | TEC | TEH | | | 33 | HOT | 600UL |
| 68 | 84 | 0.18 | 25 | P 2 | TWD 7 | VSM | | -0.75 | TEC | TEH | | | 32 | HOT | 600UL |
| 68 | 90 | 0.70 | 113 | P 2 | TWD 26 | DBC | | -1.97 | TEC | TEH | | | 36 | HOT | 600UL |
| 68 | 112 | 0.11 | 115 | 2 | SAI | 01H | | +6.27 | 01H | 01H | 0.20 | 0.30 | 124 | HOT | 580PP |
| 68 | 128 | 0.36 | 71 | P 2 | TWD 16 | VH3 | | -0.79 | TEC | TEH | | | 18 | HOT | 600UL |
| 68 | 162 | 0.48 | 114 | P 2 | TWD 19 | VH3 | | -0.78 | TEH | TEC | | | 27 | COLD | 600UL |
| 69 | 151 | 0.37 | 55 | P 2 | TWD 15 | VH3 | | -0.74 | TEH | TEC | | | 30 | COLD | 600UL |
| | | 0.31 | 43 | P 2 | TWD 13 | VH3 | | +0.89 | TEH | TEC | | | 30 | COLD | 600UL |
| 70 | 38 | 0.40 | 117 | P 2 | TWD 17 | VC3 | | +0.70 | TEH | TEC | | | 4 | COLD | 600UL |
| 70 | 66 | 0.38 | 23 | P 1 | SCI | TSH | | +0.07 | TSH | TSH | 0.15 | 0.21 | 90 | HOT | 580PP |
| 70 | 76 | 0.39 | 77 | P 2 | TWD 16 | VSM | | +1.00 | TEC | TEH | | | 33 | HOT | 600UL |
| 70 | 112 | 0.53 | 133 | P 2 | TWD 19 | 03C | | -0.06 | TEC | TEH | | | 29 | HOT | 600UL |
| 70 | 144 | 0.38 | 119 | P 2 | TWD 18 | VC3 | | -0.75 | TEH | TEC | | | 32 | COLD | 600UL |
| 70 | 152 | 0.35 | 105 | P 2 | TWD 13 | VH3 | | -0.92 | TEH | TEC | | | 30 | COLD | 600UL |
| 71 | 63 | 0.30 | 18 | P 1 | SCI | TSH | | -0.18 | TSH | TSH | 0.00 | 0.17 | 90 | HOT | 580PP |
| 71 | 79 | 0.53 | 147 | P 2 | TWD 20 | DBC | | -1.66 | TEC | TEH | | | 33 | HOT | 600UL |
| 71 | 91 | 0.26 | 144 | P 2 | TWD 13 | DBC | | -2.10 | TEC | TEH | | | 36 | HOT | 600UL |
| 71 | 97 | 1.02 | 62 | P 2 | TWD 33 | VSM | | -0.02 | TEC | TEH | | | 36 | HOT | 600UL |

SG89 - MAI, MCI, MMI, MVI, SAI, SCI, SVI, 0-100%TWD

QUERY: QueryM1

| ROW | LINE | VOLTS | DEG | CHN | IND | %TW | LOCATION | | EXT | EXT | UTIL 1 | UTIL 2 | CAL # | LEG | PROBE |
|---|---|---|---|---|---|---|---|---|---|---|---|---|---|---|---|
| 71 | 143 | 0.46 | 113 | P 2 | TWD | 18 | VH3 | -0.82 | TEH | TEC | | | 33 | COLD | 600UL |
| | | 0.31 | 91 | P 2 | TWD | 13 | 04C | -0.20 | TEH | TEC | | | 33 | COLD | 600UL |
| 71 | 147 | 0.74 | 102 | P 2 | TWD | 28 | VH3 | -0.84 | TEH | TEC | | | 31 | COLD | 600UL |
| | | 0.45 | 117 | P 2 | TWD | 20 | VC3 | -0.84 | TEH | TEC | | | 31 | COLD | 600UL |
| 72 | 26 | 0.60 | 147 | P 2 | TWD | 26 | VC3 | +0.89 | TEH | TEC | | | 50 | COLD | 600UL |
| 72 | 78 | 0.21 | 145 | P 2 | TWD | 9 | VH3 | +0.83 | TEC | TEH | | | 32 | HOT | 600UL |
| | | 0.18 | 152 | P 2 | TWD | 7 | VC3 | +0.83 | TEC | TEH | | | 32 | HOT | 600UL |
| | | 0.48 | 71 | P 2 | TWD | 17 | VH3 | -0.89 | TEC | TEH | | | 32 | HOT | 600UL |
| 72 | 80 | 0.31 | 110 | P 2 | TWD | 12 | VC3 | +0.97 | TEC | TEH | | | 32 | HOT | 600UL |
| 72 | 84 | 0.27 | 118 | P 2 | TWD | 10 | VH3 | -0.79 | TEC | TEH | | | 32 | HOT | 600UL |
| | | 0.37 | 113 | P 2 | TWD | 14 | DBC | -2.00 | TEC | TEH | | | 32 | HOT | 600UL |
| 72 | 90 | 0.31 | 82 | P 2 | TWD | 15 | DBC | -1.61 | TEC | TEH | | | 36 | HOT | 600UL |
| 72 | 114 | 0.29 | 47 | P 2 | TWD | 17 | VC3 | +0.83 | TEC | TEH | | | 28 | HOT | 600UL |
| 72 | 126 | 0.40 | 91 | P 2 | TWD | 22 | VSM | -0.77 | TEC | TEH | | | 17 | HOT | 600UL |
| 72 | 156 | 0.22 | 65 | P 2 | TWD | 10 | VC3 | -0.83 | TEH | TEC | | | 28 | COLD | 600UL |
| 73 | 13 | 0.41 | 80 | P 2 | TWD | 18 | VH3 | +0.90 | TEH | TEC | | | 54 | COLD | 600UL |
| 73 | 103 | 0.49 | 127 | P 2 | TWD | 18 | 02H | -1.25 | TEC | TEH | | | 37 | HOT | 600UL |
| 73 | 105 | 1.05 | 63 | P 2 | TWD | 29 | VSM | -0.77 | TEC | TEH | | | 37 | HOT | 600UL |
| | | 0.79 | 29 | P 2 | TWD | 25 | VH3 | -0.43 | TEC | TEH | | | 37 | HOT | 600UL |
| | | 1.62 | 113 | P 2 | TWD | 37 | VC3 | -0.73 | TEC | TEH | | | 37 | HOT | 600UL |
| 74 | 44 | 0.68 | 136 | P 2 | TWD | 25 | VH3 | -0.74 | TEH | TEC | | | 4 | COLD | 600UL |
| 74 | 54 | 0.20 | 150 | P 2 | TWD | 9 | DBH | -2.01 | TEC | TEH | | | 22 | HOT | 600UL |
| 74 | 56 | 0.31 | 81 | P 2 | TWD | 14 | DBH | +1.31 | TEC | TEH | | | 22 | HOT | 600UL |
| 74 | 72 | 0.32 | 86 | P 1 | SCI | | TSH | +0.05 | TSH | TSH | 0.69 | 0.22 | 98 | HOT | 580PP |
| 74 | 96 | 0.44 | 44 | P 2 | TWD | 20 | 02H | -1.18 | TEC | TEH | | | 36 | HOT | 600UL |
| 74 | 132 | 0.27 | 99 | P 2 | TWD | 11 | VC3 | -0.90 | TEH | TEC | | | 37 | COLD | 600UL |
| 74 | 148 | 0.37 | 149 | P 2 | TWD | 14 | VH3 | -0.85 | TEH | TEC | | | 30 | COLD | 600UL |
| | | 0.36 | 59 | P 2 | TWD | 13 | VSM | -0.85 | TEH | TEC | | | 30 | COLD | 600UL |
| 74 | 156 | 0.57 | 128 | P 2 | TWD | 23 | VH3 | -0.92 | TEH | TEC | | | 29 | COLD | 600UL |
| | | 0.57 | 103 | P 2 | TWD | 23 | VSM | -0.86 | TEH | TEC | | | 29 | COLD | 600UL |
| | | 0.61 | 67 | P 2 | TWD | 24 | VC3 | -0.80 | TEH | TEC | | | 29 | COLD | 600UL |
| 74 | 160 | 0.54 | 135 | P 2 | TWD | 21 | VC3 | -0.85 | TEH | TEC | | | 26 | COLD | 600UL |
| | | 1.17 | 106 | P 2 | TWD | 33 | VH3 | -0.81 | TEH | TEC | | | 26 | COLD | 600UL |
| 75 | 51 | 0.20 | 116 | P 2 | TWD | 9 | DBH | -1.93 | TEC | TEH | | | 20 | HOT | 600UL |
| 75 | 79 | 0.53 | 120 | P 2 | TWD | 20 | DBC | -1.81 | TEC | TEH | | | 33 | HOT | 600UL |
| 75 | 85 | 1.11 | 24 | P 2 | TWD | 32 | DBC | +1.62 | TEC | TEH | | | 33 | HOT | 600UL |
| 75 | 87 | 0.41 | 152 | P 2 | TWD | 17 | DBC | -1.93 | TEC | TEH | | | 33 | HOT | 600UL |
| 75 | 105 | 0.18 | 88 | P 1 | SCI | | TSH | +0.09 | TSH | TSH | 0.17 | 0.11 | 103 | HOT | 580PP |
| | | 0.46 | 98 | P 2 | TWD | 20 | VSM | -0.20 | TEC | TEH | | | 36 | HOT | 600UL |
| | | 0.48 | 124 | P 2 | TWD | 21 | VH3 | -0.79 | TEC | TEH | | | 36 | HOT | 600UL |
| 75 | 111 | 0.62 | 124 | P 2 | TWD | 22 | VH3 | +0.10 | TEC | TEH | | | 31 | HOT | 600UL |
| | | 0.90 | 125 | P 2 | TWD | 28 | VC3 | +1.02 | TEC | TEH | | | 31 | HOT | 600UL |
| 76 | 42 | 0.33 | 132 | P 2 | TWD | 17 | DBC | -1.55 | TEH | TEC | | | 3 | COLD | 600UL |
| 76 | 78 | 0.45 | 126 | P 2 | TWD | 16 | VC3 | +0.91 | TEC | TEH | | | 32 | HOT | 600UL |
| | | 0.21 | 159 | P 2 | TWD | 8 | VC3 | -0.97 | TEC | TEH | | | 32 | HOT | 600UL |

SG89 - MAI, MCI, MMI, MVI, SAI, SCI, SVI, 0-100%TWD

QUERY: QueryM1

| ROW | LINE | VOLTS | DEG | CHN | IND | %TW | LOCATION | | EXT | EXT | UTIL 1 | UTIL 2 | CAL # | LEG | PROBE |
|---|---|---|---|---|---|---|---|---|---|---|---|---|---|---|---|
| 76 | 114 | 0.37 | 92 | P 2 | TWD 20 | VH3 | -0.66 | | TEC | TEH | | | 28 | HOT | 600UL |
| 76 | 142 | 0.27 | 98 | P 2 | TWD 12 | 08C | -0.53 | | TEH | TEC | | | 33 | COLD | 600UL |
| 77 | 27 | 0.30 | 98 | P 2 | TWD 14 | DBC | -1.98 | | TEH | TEC | | | 49 | COLD | 600UL |
| 77 | 43 | 0.35 | 154 | P 2 | TWD 15 | VH3 | +0.81 | | TEH | TEC | | | 4 | COLD | 600UL |
| 77 | 113 | 0.27 | 97 | P 2 | TWD 11 | VH3 | -0.99 | | TEC | TEH | | | 29 | HOT | 600UL |
| 77 | 137 | 0.65 | 85 | P 2 | TWD 26 | VSM | -0.85 | | TEH | TEC | | | 34 | COLD | 600UL |
| 77 | 139 | 0.35 | 137 | P 2 | TWD 18 | VH3 | -0.83 | | TEH | TEC | | | 32 | COLD | 600UL |
| | | 0.68 | 140 | P 2 | TWD 28 | VC3 | +0.87 | | TEH | TEC | | | 32 | COLD | 600UL |
| 78 | 44 | 0.40 | 142 | P 2 | TWD 17 | VSM | -0.83 | | TEH | TEC | | | 4 | COLD | 600UL |
| 78 | 122 | 0.24 | 129 | P 2 | TWD 12 | 08H | +0.87 | | TEC | TEH | | | 18 | HOT | 600UL |
| 78 | 130 | 0.32 | 67 | P 2 | TWD 13 | VSM | -0.89 | | TEH | TEC | | | 36 | COLD | 600UL |
| 78 | 150 | 0.59 | 55 | P 2 | TWD 22 | VH3 | -0.73 | | TEH | TEC | | | 30 | COLD | 600UL |
| 79 | 43 | 0.33 | 61 | P 2 | TWD 17 | VH3 | -0.61 | | TEH | TEC | | | 3 | COLD | 600UL |
| 79 | 121 | 0.68 | 101 | P 2 | TWD 30 | VH3 | -0.95 | | TEC | TEH | | | 17 | HOT | 600UL |
| 80 | 86 | 0.43 | 57 | P 2 | TWD 16 | 01H | -1.07 | | TEC | TEH | | | 32 | HOT | 600UL |
| 80 | 106 | 0.24 | 46 | P 2 | TWD 12 | VH3 | +0.89 | | TEC | TEH | | | 40 | HOT | 600UL |
| 80 | 152 | 0.51 | 114 | P 2 | TWD 22 | VSM | +0.85 | | TEH | TEC | | | 31 | COLD | 600UL |
| | | 0.77 | 130 | P 2 | TWD 28 | VSM | -0.85 | | TEH | TEC | | | 31 | COLD | 600UL |
| | | 0.70 | 103 | P 2 | TWD 26 | VC3 | -0.87 | | TEH | TEC | | | 31 | COLD | 600UL |
| | | 0.76 | 102 | P 2 | TWD 28 | VC3 | +0.83 | | TEH | TEC | | | 31 | COLD | 600UL |
| 81 | 43 | 0.81 | 121 | P 2 | TWD 28 | VSM | -0.84 | | TEH | TEC | | | 4 | COLD | 600UL |
| | | 0.51 | 115 | P 2 | TWD 20 | VC3 | -0.58 | | TEH | TEC | | | 4 | COLD | 600UL |
| 81 | 55 | 0.34 | 85 | P 2 | TWD 16 | VH3 | -0.80 | | TEC | TEH | | | 21 | HOT | 600UL |
| 81 | 75 | 0.21 | 86 | P 2 | TWD 9 | VC3 | +0.79 | | TEC | TEH | | | 32 | HOT | 600UL |
| 81 | 79 | 0.47 | 85 | P 2 | TWD 17 | VH3 | -0.91 | | TEC | TEH | | | 32 | HOT | 600UL |
| 81 | 85 | 0.27 | 42 | P 2 | TWD 10 | VH3 | +0.78 | | TEC | TEH | | | 32 | HOT | 600UL |
| 81 | 105 | 0.24 | 118 | P 2 | TWD 11 | VSM | +0.93 | | TEC | TEH | | | 40 | HOT | 600UL |
| | | 0.41 | 89 | P 2 | TWD 18 | VH3 | +0.83 | | TEC | TEH | | | 40 | HOT | 600UL |
| 81 | 135 | 0.37 | 101 | P 2 | TWD 18 | VH3 | +0.87 | | TEH | TEC | | | 34 | COLD | 600UL |
| 82 | 28 | 0.37 | 135 | P 2 | TWD 16 | VH3 | -0.72 | | TEH | TEC | | | 49 | COLD | 600UL |
| 82 | 68 | 0.82 | 114 | P 2 | TWD 27 | VH3 | -0.84 | | TEC | TEH | | | 10 | HOT | 600UL |
| | | 0.39 | 147 | P 2 | TWD 16 | VH3 | +0.78 | | TEC | TEH | | | 10 | HOT | 600UL |
| 82 | 148 | 0.81 | 118 | P 2 | TWD 29 | VH3 | -0.81 | | TEH | TEC | | | 31 | COLD | 600UL |
| 84 | 96 | 0.60 | 22 | P 1 | SCI | TSH | -0.12 | | TSH | TSH | 0.35 | 0.21 | 103 | HOT | 580PP |
| 85 | 93 | 0.49 | 23 | P 1 | SCI | TSH | -0.09 | | TSH | TSH | 0.00 | 0.19 | 107 | HOT | 580PP |
| 85 | 99 | 0.53 | 32 | P 2 | TWD 19 | 02H | -1.24 | | TEC | TEH | | | 37 | HOT | 600UL |
| 85 | 119 | 0.38 | 24 | P 1 | SCI | TSH | -0.05 | | TSH | TSH | 0.20 | 0.22 | 64 | HOT | 600PP |
| 85 | 123 | 0.34 | 13 | P 1 | SCI | TSH | -0.14 | | TSH | TSH | 0.55 | 0.26 | 69 | HOT | 600PP |
| 86 | 82 | 0.67 | 24 | P 1 | MCI | TSH | -0.12 | | TSH | TSH | 0.98 | 0.16 | 98 | HOT | 580PP |
| 88 | 36 | 0.40 | 77 | P 2 | TWD 17 | VH2 | -0.74 | | TEH | TEC | | | 47 | COLD | 600UL |
| 88 | 40 | 0.39 | 111 | P 2 | TWD 18 | VH2 | -0.79 | | TEH | TEC | | | 3 | COLD | 600UL |

SG89 - MAI, MCI, MMI, MVI, SAI, SCI, SVI, 0-100%TWD

QUERY: QueryM1

| ROW | LINE | VOLTS | DEG | CHN | IND | %TW | LOCATION | | EXT | EXT | UTIL 1 | UTIL 2 | CAL # | LEG | PROBE |
|---|---|---|---|---|---|---|---|---|---|---|---|---|---|---|---|
| 88 | 58 | 0.41 | 92 | P 2 | TWD | 19 | VH2 | -0.90 | TEC | TEH | | | 21 | HOT | 600UL |
| 88 | 68 | 0.28 | 102 | P 2 | TWD | 13 | VH2 | -1.00 | TEC | TEH | | | 9 | HOT | 600UL |
| 88 | 140 | 0.55 | 122 | P 2 | TWD | 24 | VH2 | +1.14 | TEH | TEC | | | 32 | COLD | 600UL |
| 89 | 85 | 0.32 | 44 | P 2 | TWD | 12 | VH2 | -0.89 | TEC | TEH | | | 32 | HOT | 600UL |
| 90 | 24 | 0.36 | 86 | P 2 | TWD | 17 | VH2 | -1.00 | TEH | TEC | | | 17 | COLD | 600UL |
| | | 0.38 | 26 | P 2 | TWD | 18 | VSM | -0.79 | TEH | TEC | | | 17 | COLD | 600UL |
| 90 | 34 | 0.29 | 158 | P 2 | TWD | 15 | VH2 | -0.92 | TEH | TEC | | | 17 | COLD | 600UL |
| 90 | 52 | 0.39 | 116 | P 2 | TWD | 16 | VH2 | -0.99 | TEC | TEH | | | 1 | HOT | 600UL |
| 90 | 94 | 0.23 | 160 | P 2 | TWD | 11 | VSM | -0.78 | TEH | TEC | | | 10 | COLD | 600UL |
| 90 | 140 | 0.31 | 121 | P 2 | TWD | 14 | VH2 | -0.81 | TEH | TEC | | | 25 | COLD | 600UL |
| 90 | 144 | 0.48 | 34 | P 2 | TWD | 19 | VSM | +0.89 | TEH | TEC | | | 25 | COLD | 600UL |
| 91 | 43 | 0.50 | 91 | P 2 | TWD | 20 | 06C | -0.98 | TEH | TEC | | | 18 | COLD | 600UL |
| 91 | 145 | 0.32 | 116 | P 2 | TWD | 14 | VH2 | -0.75 | TEH | TEC | | | 25 | COLD | 600UL |
| 91 | 151 | 0.39 | 52 | P 2 | TWD | 17 | VH2 | -0.78 | TEH | TEC | | | 25 | COLD | 600UL |
| 93 | 23 | 1.08 | 90 | P 2 | TWD | 34 | 02C | +0.87 | TEH | TEC | | | 17 | COLD | 600UL |
| 93 | 35 | 0.15 | 107 | 2 | MAI | | 05H | +12.20 TO+20.90 | 05H | 06H | 0.00 | 8.70 | 156 | HOT | 580PP |
| | | 0.25 | 128 | 2 | MAI | | 05H | +23.40 TO+33.80 | 05H | 06H | 0.00 | 10.40 | 156 | HOT | 580PP |
| 93 | 115 | 0.41 | 15 | 2 | SAI | | TSH | -0.36 | TSH | TSH | 0.46 | 0.46 | 88 | HOT | 600PP |
| 94 | 26 | 0.46 | 102 | P 2 | TWD | 19 | VH2 | +0.96 | TEH | TEC | | | 18 | COLD | 600UL |
| 94 | 50 | 0.25 | 105 | P 2 | TWD | 11 | 05C | +0.00 | TEC | TEH | | | 2 | HOT | 600UL |
| 94 | 146 | 0.29 | 141 | P 2 | TWD | 13 | VH3 | -0.87 | TEH | TEC | | | 25 | COLD | 600UL |
| 95 | 33 | 0.28 | 112 | 2 | SAI | | 05H | +0.62 | 05H | 05H | 0.00 | 0.28 | 131 | HOT | 580PP |
| 96 | 48 | 0.34 | 89 | P 2 | TWD | 15 | VH2 | -0.85 | TEC | TEH | | | 1 | HOT | 600UL |
| 97 | 37 | 0.52 | 85 | P 2 | TWD | 23 | VC3 | +0.92 | TEH | TEC | | | 17 | COLD | 600UL |
| 97 | 41 | 0.40 | 40 | P 2 | TWD | 19 | VH2 | +0.92 | TEH | TEC | | | 17 | COLD | 600UL |
| 97 | 47 | 0.34 | 92 | P 2 | TWD | 15 | VH2 | +0.75 | TEC | TEH | | | 1 | HOT | 600UL |
| 98 | 136 | 0.36 | 59 | P 2 | TWD | 16 | VH2 | +0.82 | TEH | TEC | | | 23 | COLD | 600UL |
| | | 0.29 | 88 | P 2 | TWD | 14 | VH2 | -0.76 | TEH | TEC | | | 23 | COLD | 600UL |
| 100 | 26 | 0.36 | 103 | P 2 | TWD | 17 | VH2 | +0.96 | TEH | TEC | | | 17 | COLD | 600UL |
| 100 | 46 | 0.25 | 146 | P 1 | MCI | | TSH | +0.05 | TSH | TSH | 0.32 | 0.25 | 68 | HOT | 600PP |
| 101 | 35 | 0.36 | 49 | P 2 | TWD | 16 | VH3 | -0.69 | TEH | TEC | | | 18 | COLD | 600UL |
| 101 | 143 | 0.44 | 67 | P 2 | TWD | 19 | VH2 | -0.77 | TEH | TEC | | | 23 | COLD | 600UL |
| 102 | 38 | 0.46 | 123 | 2 | SAI | | 06H | -0.59 | 06H | 06H | 0.29 | 0.62 | 131 | HOT | 580PP |
| 102 | 58 | 0.26 | 115 | P 2 | TWD | 11 | VC3 | -0.73 | TEC | TEH | | | 44 | HOT | 600UL |
| | | 0.29 | 155 | P 2 | TWD | 11 | VC2 | -0.88 | TEC | TEH | | | 44 | HOT | 600UL |
| | | 0.22 | 55 | P 2 | TWD | 10 | VC3 | -0.92 | TSC | TEH | | | 6 | HOT | 600UL |
| 102 | 122 | 0.36 | 87 | P 2 | TWD | 20 | VC2 | -0.80 | TEC | TEH | | | 7 | HOT | 600UL |
| 102 | 132 | 0.40 | 81 | P 2 | TWD | 18 | VH2 | -0.79 | TEH | TEC | | | 23 | COLD | 600UL |
| 103 | 47 | 0.39 | 22 | P 2 | TWD | 16 | VH2 | -0.91 | TEC | TEH | | | 2 | HOT | 600UL |
| 103 | 137 | 0.46 | 108 | P 2 | TWD | 20 | VH3 | -0.79 | TEH | TEC | | | 23 | COLD | 600UL |

SG89 - MAI, MCI, MMI, MVI, SAI, SCI, SVI, 0-100%TWD

QUERY: QueryM1

| ROW | LINE | VOLTS | DEG | CHN | IND | %TW | LOCATION | | | EXT | EXT | UTIL 1 | UTIL 2 | CAL # | LEG | PROBE |
|---|---|---|---|---|---|---|---|---|---|---|---|---|---|---|---|---|
| 104 | 94 | 0.60 | 147 | P 2 | TWD | 24 | VSM | -0.78 | | TEH | TEC | | | 9 | COLD | 600UL |
| 106 | 40 | 0.18 | 112 | 2 | MAI | | 06H | +3.14 | TO+10.28 | 06H | 06H | 0.32 | 7.14 | 131 | HOT | 580PP |
| 106 | 62 | 0.36 | 94 | P 2 | TWD | 14 | VC2 | -0.88 | | TEC | TEH | | | 6 | HOT | 600UL |
| 106 | 84 | 0.29 | 125 | P 2 | TWD | 13 | VH3 | +0.87 | | TEH | TEC | | | 10 | COLD | 600UL |
| 106 | 104 | 0.32 | 74 | P 2 | TWD | 15 | VC2 | -0.75 | | TEH | TEC | | | 46 | COLD | 600UL |
| 106 | 136 | 0.41 | 118 | P 2 | TWD | 18 | VH2 | -0.75 | | TEH | TEC | | | 23 | COLD | 600UL |
| 107 | 35 | 0.32 | 82 | P 2 | TWD | 16 | DBC | +1.81 | | TEH | TEC | | | 17 | COLD | 600UL |
| 107 | 103 | 0.49 | 38 | P 2 | TWD | 21 | VH2 | -0.92 | | TEH | TEC | | | 11 | COLD | 600UL |
| 108 | 42 | 0.68 | 113 | P 2 | TWD | 27 | DBH | -1.85 | | TEH | TEC | | | 17 | COLD | 600UL |
| | | 0.35 | 95 | P 2 | TWD | 17 | DBH | +2.00 | | TEH | TEC | | | 17 | COLD | 600UL |
| 109 | 47 | 0.32 | 111 | P 2 | TWD | 15 | VC3 | -0.94 | | TEC | TEH | | | 1 | HOT | 600UL |
| | | 0.37 | 122 | P 2 | TWD | 16 | VSM | -1.00 | | TEC | TEH | | | 1 | HOT | 600UL |
| 109 | 55 | 0.28 | 83 | P 2 | TWD | 13 | VH2 | -0.82 | | TEC | TEH | | | 1 | HOT | 600UL |
| 109 | 95 | 0.24 | 105 | P 2 | TWD | 11 | VSM | +0.46 | | TEH | TEC | | | 10 | COLD | 600UL |
| 110 | 34 | 0.27 | 162 | P 2 | TWD | 12 | VH2 | +0.94 | | TEH | TEC | | | 18 | COLD | 600UL |
| 110 | 36 | 0.10 | 81 | 2 | SAI | | 07H | -11.50 | | 07H | 07H | 0.13 | 0.62 | 131 | HOT | 580PP |
| 111 | 43 | 0.57 | 51 | P 2 | TWD | 22 | VH3 | -1.02 | | TEH | TEC | | | 18 | COLD | 600UL |
| 111 | 99 | 0.41 | 44 | P 2 | TWD | 18 | 09C | +0.47 | | TEH | TEC | | | 10 | COLD | 600UL |
| 111 | 137 | 0.42 | 97 | P 2 | TWD | 18 | VH2 | -0.77 | | TEH | TEC | | | 23 | COLD | 600UL |
| | | 0.35 | 91 | P 2 | TWD | 16 | VH2 | +0.87 | | TEH | TEC | | | 23 | COLD | 600UL |
| 112 | 72 | 0.36 | 64 | P 2 | TWD | 17 | VH3 | +0.80 | | TEH | TEC | | | 5 | COLD | 600UL |
| 112 | 128 | 0.22 | 99 | P 2 | TWD | 13 | VH2 | +0.08 | | TEC | TEH | | | 7 | HOT | 600UL |
| 112 | 144 | 0.55 | 60 | P 2 | TWD | 22 | DBC | +2.01 | | TEH | TEC | | | 23 | COLD | 600UL |
| 113 | 105 | 0.39 | 93 | P 2 | TWD | 16 | VH2 | +0.87 | | TEH | TEC | | | 12 | COLD | 600UL |
| | | 0.38 | 56 | P 2 | TWD | 16 | VH3 | +0.91 | | TEH | TEC | | | 12 | COLD | 600UL |
| 114 | 36 | 0.26 | 34 | P 2 | TWD | 13 | DBC | -1.77 | | TEH | TEC | | | 17 | COLD | 600UL |
| 114 | 40 | 0.53 | 80 | P 2 | TWD | 23 | DBH | +2.13 | | TEH | TEC | | | 17 | COLD | 600UL |
| 114 | 46 | 0.19 | 109 | 2 | SAI | | 07H | -0.44 | | 07H | 07H | 0.21 | 0.30 | 131 | HOT | 580PP |
| 114 | 62 | 0.31 | 137 | P 2 | TWD | 12 | DBH | -1.75 | | TEC | TEH | | | 6 | HOT | 600UL |
| 114 | 76 | 0.24 | 135 | P 1 | SCI | | TSH | +0.02 | | TSH | TSH | 0.30 | 0.48 | 100 | HOT | 600PP |
| 114 | 136 | 0.34 | 146 | P 2 | TWD | 16 | VC3 | +0.85 | | TEH | TEC | | | 23 | COLD | 600UL |
| 117 | 95 | 0.42 | 123 | P 2 | TWD | 19 | DBC | +0.80 | | TEH | TEC | | | 9 | COLD | 600UL |
| 118 | 70 | 0.41 | 98 | P 2 | TWD | 17 | VH1 | -0.83 | | TEC | TEH | | | 5 | HOT | 600UL |
| 118 | 84 | 0.38 | 66 | P 2 | TWD | 16 | VC2 | +0.53 | | TEH | TEC | | | 10 | COLD | 600UL |
| 118 | 128 | 0.28 | 112 | P 2 | TWD | 12 | 05H | +0.67 | | TEC | TEH | | | 8 | HOT | 600UL |
| 119 | 79 | 0.53 | 123 | P 2 | TWD | 22 | VH3 | +0.86 | | TEH | TEC | | | 7 | COLD | 600UL |
| 119 | 119 | 0.49 | 50 | P 2 | TWD | 24 | 10H | -1.01 | | TEC | TEH | LOCOK | | 3 | HOT | 600UL |
| 119 | 121 | 0.50 | 120 | P 2 | TWD | 26 | 10H | -1.09 | | TEC | TEH | LOCOK | | 7 | HOT | 600UL |
| 120 | 42 | 0.45 | 114 | P 2 | TWD | 20 | VH1 | -0.81 | | TEH | TEC | | | 17 | COLD | 600UL |

SG89 - MAI, MCI, MMI, MVI, SAI, SCI, SVI, 0-100%TWD

QUERY: QueryM1

| ROW | LINE | VOLTS | DEG | CHN | IND | %TW | LOCATION | | EXT | EXT | UTIL 1 | UTIL 2 | CAL # | LEG | PROBE |
|---|---|---|---|---|---|---|---|---|---|---|---|---|---|---|---|
| 120 | 60 | 0.46 | 140 | P 2 | TWD | 19 | VH1 | -0.98 | TEC | TEH | | | 5 | HOT | 600UL |
| 120 | 62 | 0.26 | 152 | P 2 | TWD | 12 | VH1 | -0.96 | TEC | TEH | | | 5 | HOT | 600UL |
| 120 | 68 | 0.39 | 101 | P 2 | TWD | 16 | VH1 | -0.96 | TEC | TEH | | | 5 | HOT | 600UL |
| 120 | 72 | 0.43 | 144 | P 2 | TWD | 17 | 10H | -1.20 | TEH | TEC | | | 6 | COLD | 600UL |
| 120 | 74 | 0.68 | 112 | P 2 | TWD | 26 | 10H | -1.41 | TEH | TEC | LAR | | 7 | COLD | 600UL |
| 120 | 128 | 0.12 | 89 | 2 | SAI | | 02H | -14.73 | 02H | 02H | 0.49 | 0.33 | 137 | HOT | 580PP |
| | | 0.35 | 82 | P 2 | TWD | 20 | 08H | +0.79 | TEC | TEH | | | 7 | HOT | 600UL |
| | | 0.37 | 120 | P 2 | TWD | 21 | VH1 | -1.00 | TEC | TEH | | | 7 | HOT | 600UL |
| 121 | 39 | 0.33 | 76 | P 2 | TWD | 16 | 10H | -1.82 | TEH | TEC | LOCOK | | 17 | COLD | 600UL |
| 121 | 45 | 0.74 | 120 | P 2 | TWD | 28 | VC2 | -0.53 | TEH | TEC | LAR | | 17 | COLD | 600UL |
| 121 | 47 | 0.34 | 125 | P 2 | TWD | 15 | 10H | +0.74 | TEC | TEH | | | 1 | HOT | 600UL |
| 121 | 77 | 0.17 | 114 | 2 | SAI | | 03H | +0.38 | 03H | 03H | 0.17 | 0.47 | 121 | HOT | 580PP |
| 121 | 83 | 0.53 | 129 | P 2 | TWD | 22 | VC3 | -0.82 | TEH | TEC | | | 8 | COLD | 600UL |
| 121 | 109 | 0.57 | 82 | P 2 | TWD | 26 | 10H | -2.03 | TEC | TEH | LOCOK | | 3 | HOT | 600UL |
| 122 | 40 | 0.24 | 16 | P 2 | TWD | 12 | 02C | -0.17 | TEH | TEC | | | 17 | COLD | 600UL |
| 122 | 42 | 0.57 | 97 | P 2 | TWD | 22 | DBC | -2.19 | TEH | TEC | | | 18 | COLD | 600UL |
| 123 | 121 | 0.30 | 64 | P 2 | TWD | 17 | VH1 | -0.98 | TEC | TEH | | | 7 | HOT | 600UL |
| 124 | 48 | 0.55 | 103 | P 2 | TWD | 22 | VH1 | -0.96 | TEC | TEH | | | 1 | HOT | 600UL |
| 124 | 56 | 0.50 | 69 | P 2 | TWD | 19 | VH1 | -0.98 | TEC | TEH | | | 6 | HOT | 600UL |
| 125 | 53 | 0.37 | 138 | P 2 | TWD | 16 | VH1 | -0.96 | TEC | TEH | | | 1 | HOT | 600UL |
| 125 | 77 | 0.34 | 135 | P 2 | TWD | 16 | VH1 | +0.86 | TEH | TEC | | | 8 | COLD | 600UL |
| | | 0.25 | 41 | P 2 | TWD | 13 | VH1 | -0.81 | TEH | TEC | | | 8 | COLD | 600UL |
| 126 | 48 | 0.40 | 111 | P 2 | TWD | 16 | VH1 | -1.19 | TEC | TEH | | | 2 | HOT | 600UL |
| 126 | 50 | 0.28 | 112 | P 2 | TWD | 13 | VH1 | -1.12 | TEC | TEH | | | 1 | HOT | 600UL |
| 126 | 56 | 0.49 | 88 | P 2 | TWD | 20 | VH1 | -1.08 | TEC | TEH | | | 5 | HOT | 600UL |
| 126 | 126 | 0.36 | 91 | P 2 | TWD | 15 | VH1 | -1.24 | TEC | TEH | | | 8 | HOT | 600UL |
| 127 | 123 | 0.31 | 140 | P 2 | TWD | 18 | 09C | -1.18 | TEC | TEH | | | 7 | HOT | 600UL |
| 128 | 72 | 0.25 | 148 | P 2 | TWD | 11 | 10H | -1.05 | TEH | TEC | | | 6 | COLD | 600UL |
| | | 0.40 | 67 | P 2 | TWD | 16 | 10H | +0.85 | TEH | TEC | | | 6 | COLD | 600UL |
| 129 | 47 | 0.41 | 146 | P 2 | TWD | 18 | 10H | +0.74 | TEC | TEH | | | 1 | HOT | 600UL |
| 129 | 49 | 0.23 | 91 | P 2 | TWD | 11 | VH1 | +0.86 | TEC | TEH | | | 1 | HOT | 600UL |
| | | 0.35 | 79 | P 2 | TWD | 16 | VH1 | -0.84 | TEC | TEH | | | 1 | HOT | 600UL |
| 129 | 73 | 0.22 | 47 | P 2 | TWD | 11 | DBH | +1.80 | TEH | TEC | | | 8 | COLD | 600UL |
| 129 | 109 | 0.23 | 134 | P 2 | TWD | 14 | 10H | -0.94 | TEC | TEH | | | 3 | HOT | 600UL |
| 130 | 48 | 0.43 | 77 | P 2 | TWD | 18 | 02C | -0.08 | TEC | TEH | | | 1 | HOT | 600UL |
| 130 | 52 | 0.36 | 137 | P 2 | TWD | 16 | VH1 | -0.90 | TEC | TEH | | | 1 | HOT | 600UL |
| 130 | 54 | 0.45 | 128 | P 2 | TWD | 18 | VH1 | -0.86 | TEC | TEH | | | 1 | HOT | 600UL |
| 130 | 74 | 0.34 | 130 | P 2 | TWD | 16 | 10H | +0.92 | TEH | TEC | | | 8 | COLD | 600UL |
| 130 | 78 | 0.54 | 96 | P 2 | TWD | 22 | 10H | -1.04 | TEH | TEC | | | 8 | COLD | 600UL |
| 130 | 110 | 0.36 | 152 | P 2 | TWD | 15 | VH1 | -0.85 | TEC | TEH | | | 4 | HOT | 600UL |

SG89 - MAI, MCI, MMI, MVI, SAI, SCI, SVI, 0-100%TWD

QUERY: QueryM1

| ROW | LINE | VOLTS | DEG | CHN | IND | %TW | LOCATION | | EXT | EXT | UTIL 1 | UTIL 2 | CAL # | LEG | PROBE |
|---|---|---|---|---|---|---|---|---|---|---|---|---|---|---|---|
| 130 | 116 | 0.46 | 74 | P 2 | TWD | 19 | VH1 | -0.90 | TEC | TEH | | | 4 | HOT | 600UL |
| 132 | 106 | 0.29 | 87 | P 2 | TWD | 13 | 10H | -1.18 | TEH | TEC | | | 15 | COLD | 600UL |
| 133 | 55 | 0.28 | 73 | P 2 | TWD | 12 | 02H | +0.26 | TEH | TEC | LAR | | 14 | COLD | 600UL |
| 133 | 81 | 0.55 | 108 | P 2 | TWD | 20 | VH1 | +0.85 | TEH | TEC | | | 14 | COLD | 600UL |
| 133 | 85 | 0.40 | 108 | P 2 | TWD | 16 | 06H | +0.83 | TEH | TEC | | | 14 | COLD | 600UL |
| 133 | 119 | 0.42 | 149 | P 2 | TWD | 19 | VH1 | +0.91 | TEH | TEC | | | 20 | COLD | 600UL |
| 133 | 125 | 0.28 | 44 | P 2 | TWD | 13 | 01C | +0.86 | TEH | TEC | | | 20 | COLD | 600UL |
| 134 | 52 | 0.34 | 92 | P 2 | TWD | 14 | VH1 | -0.77 | TEH | TEC | | | 14 | COLD | 600UL |
| 134 | 64 | 0.39 | 130 | P 2 | TWD | 16 | VC3 | -0.88 | TEH | TEC | | | 13 | COLD | 600UL |
| | | 0.37 | 98 | P 2 | TWD | 16 | VH3 | -0.92 | TEH | TEC | | | 13 | COLD | 600UL |
| 134 | 88 | 0.37 | 79 | P 2 | TWD | 15 | VH1 | +0.84 | TEH | TEC | | | 14 | COLD | 600UL |
| 134 | 124 | 0.22 | 75 | P 2 | TWD | 13 | VC3 | +0.62 | 01C | TEH | | | 76 | HOT | 600UL |
| 136 | 68 | 0.52 | 60 | P 2 | TWD | 21 | VH1 | -0.87 | TEH | TEC | | | 13 | COLD | 600UL |
| 136 | 88 | 0.41 | 81 | P 2 | TWD | 18 | 06H | +0.60 | TEH | TEC | | | 13 | COLD | 600UL |
| 137 | 69 | 0.39 | 51 | P 2 | TWD | 15 | VH1 | +0.59 | TEH | TEC | | | 14 | COLD | 600UL |
| 137 | 71 | 0.38 | 120 | P 2 | TWD | 15 | DBH | -1.77 | TEH | TEC | | | 14 | COLD | 600UL |
| 138 | 64 | 0.35 | 91 | P 2 | TWD | 14 | 10H | +0.75 | TEH | TEC | | | 14 | COLD | 600UL |
| 138 | 76 | 0.46 | 148 | P 2 | TWD | 18 | VH1 | -0.81 | TEH | TEC | | | 14 | COLD | 600UL |
| 138 | 92 | 0.54 | 77 | P 2 | TWD | 20 | 07C | +1.19 | TEH | TEC | | | 14 | COLD | 600UL |
| 138 | 104 | 0.30 | 108 | P 2 | TWD | 14 | VH1 | +0.84 | TEH | TEC | | | 15 | COLD | 600UL |
| 139 | 61 | 0.31 | 97 | P 2 | TWD | 13 | 09C | -1.04 | TEH | TEC | | | 14 | COLD | 600UL |
| 139 | 103 | 0.56 | 145 | P 2 | TWD | 23 | VH2 | +0.91 | TEH | TEC | | | 15 | COLD | 600UL |
| 140 | 100 | 0.27 | 145 | P 2 | TWD | 11 | VC1 | +0.85 | TEH | TEC | | | 16 | COLD | 600UL |
| 141 | 67 | 0.37 | 93 | P 2 | TWD | 15 | 09C | -1.08 | TEH | TEC | | | 14 | COLD | 600UL |
| 141 | 103 | 0.38 | 126 | P 2 | TWD | 16 | VH3 | -0.93 | TEH | TEC | | | 16 | COLD | 600UL |
| 141 | 109 | 0.53 | 89 | P 2 | TWD | 22 | VH3 | -0.02 | TEH | TEC | | | 15 | COLD | 600UL |
| 142 | 92 | 0.47 | 116 | P 2 | TWD | 18 | VH1 | -0.89 | TEH | TEC | | | 14 | COLD | 600UL |
| 143 | 71 | 0.57 | 108 | P 2 | TWD | 21 | VH1 | -0.90 | TEH | TEC | | | 14 | COLD | 600UL |
| | | 0.45 | 93 | P 2 | TWD | 17 | VH1 | +0.75 | TEH | TEC | | | 14 | COLD | 600UL |
| | | 0.48 | 65 | P 2 | TWD | 18 | DBH | +2.04 | TEH | TEC | | | 14 | COLD | 600UL |
| 143 | 73 | 0.24 | 134 | P 2 | TWD | 10 | DBC | +1.81 | TEH | TEC | | | 14 | COLD | 600UL |
| | | 0.42 | 121 | P 2 | TWD | 16 | DBC | -1.81 | TEH | TEC | | | 14 | COLD | 600UL |
| 143 | 81 | 0.29 | 17 | P 2 | TWD | 12 | VC1 | -0.83 | TEH | TEC | | | 14 | COLD | 600UL |
| 143 | 87 | 0.29 | 128 | P 2 | TWD | 13 | 10C | +0.85 | TEH | TEC | | | 13 | COLD | 600UL |
| | | 0.54 | 74 | P 2 | TWD | 22 | DBC | +1.66 | TEH | TEC | | | 13 | COLD | 600UL |
| 143 | 103 | 0.57 | 109 | P 2 | TWD | 23 | DBH | +1.58 | TEH | TEC | | | 15 | COLD | 600UL |
| 143 | 109 | 0.75 | 76 | P 2 | TWD | 26 | DBC | -1.77 | TEH | TEC | | | 16 | COLD | 600UL |
| 144 | 74 | 0.86 | 119 | P 2 | TWD | 28 | VC1 | +0.94 | TEH | TEC | | | 14 | COLD | 600UL |
| | | 0.28 | 103 | P 2 | TWD | 12 | DBC | -1.77 | TEH | TEC | | | 14 | COLD | 600UL |
| 144 | 102 | 0.29 | 115 | P 2 | TWD | 12 | DBH | -1.69 | TEH | TEC | | | 16 | COLD | 600UL |
| 145 | 75 | 0.56 | 118 | P 2 | TWD | 21 | DBH | +1.99 | TEH | TEC | | | 14 | COLD | 600UL |

SG89 - MAI, MCI, MMI, MVI, SAI, SCI, SVI, 0-100%TWD

QUERY: QueryM1

| ROW | LINE | VOLTS | DEG | CHN | IND | %TW | LOCATION | | EXT | EXT | UTIL 1 | UTIL 2 | CAL # | LEG | PROBE |
|---|---|---|---|---|---|---|---|---|---|---|---|---|---|---|---|
| 145 | 81 | 0.84 | 93 | P 2 | TWD | 29 | VH1 | +0.81 | TEH | TEC | | | 13 | COLD | 600UL |
| 145 | 89 | 0.46 | 88 | P 2 | TWD | 19 | VC2 | +0.88 | TEH | TEC | | | 13 | COLD | 600UL |
| 145 | 91 | 1.14 | 97 | P 2 | TWD | 33 | DBC | +1.77 | TEH | TEC | | | 14 | COLD | 600UL |
| 145 | 103 | 0.90 | 110 | P 2 | TWD | 29 | DBH | +1.81 | TEH | TEC | | | 16 | COLD | 600UL |
| 146 | 78 | 0.46 | 81 | P 2 | TWD | 18 | DBH | +1.90 | TEH | TEC | | | 14 | COLD | 600UL |
| 146 | 88 | 0.70 | 46 | P 2 | TWD | 24 | DBC | +1.65 | TEH | TEC | | | 14 | COLD | 600UL |
| 146 | 92 | 0.94 | 116 | P 2 | TWD | 29 | DBC | +1.79 | TEH | TEC | | | 14 | COLD | 600UL |
| | | 0.29 | 128 | P 2 | TWD | 13 | DBH | +1.87 | TEH | TEC | | | 14 | COLD | 600UL |
| 146 | 94 | 0.93 | 60 | P 2 | TWD | 29 | DBC | +1.76 | TEH | TEC | | | 14 | COLD | 600UL |
| | | 0.44 | 99 | P 2 | TWD | 17 | DBH | +1.98 | TEH | TEC | | | 14 | COLD | 600UL |
| 146 | 98 | 0.44 | 55 | P 2 | TWD | 18 | 03H | -1.17 | TEH | TEC | | | 16 | COLD | 600UL |
| 147 | 81 | 1.26 | 80 | P 2 | TWD | 34 | DBC | +1.82 | TEH | TEC | | | 14 | COLD | 600UL |

Total Tubes : 417
Total Records: 506

## 8 ATTACHMENT - 1

## LIST OF COMPLETED ISI NDE EXAMINATIONS AND SYSTEM PRESSURE TESTS

**ATTACHMENT - 1**

**ISI U2C12 Completed Examinations**

**(14 Pages)**

**U2C12 Class-1 and 2, System Pressure Tests Completed**

**(1 Page)**

## ISI U2C12 COMPLETED EXAMINATIONS

| ISI ID | AREA DESCRIPTIONS | CAT | ITEM NO | VOL | SURF | VIS | NDE PROCEDURE |
|---|---|---|---|---|---|---|---|
| 02-001-001 | BOTTOM HEAD DOME WELD | B-A | B1.21 | UT | | | SO23-XXVII-3.50.8 |
| 02-001-002 | BOTTOM HEAD PEEL WELD @ 30 DEGREES | B-A | B1.22 | UT | | | SO23-XXVII-3.50.8 |
| 02-001-003 | BOTTOM HEAD PEEL WELD @ 90 DEGREES | B-A | B1.22 | UT | | | SO23-XXVII-3.50.8 |
| 02-001-004 | BOTTOM HEAD PEEL WELD @ 150 DEGREES | B-A | B1.22 | UT | | | SO23-XXVII-3 50 8 |
| 02-001-005 | BOTTOM HEAD PEEL WELD @ 210 DEGREES | B-A | B1.22 | UT | | | SO23-XXVII-3.50.8 |
| 02-001-006 | BOTTOM HEAD PEEL WELD @ 270 DEGREES | B-A | B1.22 | UT | | | SO23-XXVII-3.50.8 |
| 02-001-007 | BOTTOM HEAD PEEL WELD @ 330 DEGREES | B-A | B1.22 | UT | | | SO23-XXVII-3.50.8 |
| 02-001-008 | BOTTOM HEAD TO SHELL GIRTH WELD | B-A | B1.11 | UT | | | SO23-XXVII-3.50 8 |
| 02-001-009 | LOWER SHELL LONGITUDINAL WELD @ 90 DEGREES | B-A | B1.12 | UT | | | SO23-XXVII-3.50.8 |
| 02-001-010 | LOWER SHELL LONGITUDINAL WELD @ 210 DEGREES | B-A | B1.12 | UT | | | SO23-XXVII-3.50.8 |
| 02-001-011 | LOWER SHELL LONG WELD @ 330 DEGREES | B-A | B1.12 | UT | | | SO23-XXVII-3.50 8 |
| 02-001-012 | MIDDLE SHELL LOWER GIRTH WELD | B-A | B1.11 | UT | | | SO23-XXVII-3.50.8 |
| 02-001-013 | MIDDLE SHELL WELD @ 90 DEGREES | B-A | B1.12 | UT | | | SO23-XXVII-3.50 8 |
| 02-001-014 | MIDDLE SHELL WELD @ 210 DEGREES | B-A | B1.12 | UT | | | SO23-XXVII-3.50 8 |
| 02-001-015 | MIDDLE SHELL WELD @ 330 DEGREES | B-A | B1.12 | UT | | | SO23-XXVII-3.50.8 |
| 02-001-016 | MIDDLE SHELL UPPER GIRTH WELD | B-A | B1.11 | UT | | | SO23-XXVII-3.50.8 |
| 02-001-017 | UPPER SHELL WELD @ 90 DEGREES | B-A | B1.12 | UT | | | SO23-XXVII-3.50.8 |
| 02-001-018 | UPPER SHELL WELD @ 210 DEGREES | B-A | B1.12 | UT | | | SO23-XXVII-3.50.8 |
| 02-001-019 | UPPER SHELL WELD @ 330 DEGREES | B-A | B1.12 | UT | | | SO23-XXVII-3.50.8 |
| 02-001-020-A | UPPER SHELL TO FLANGE WELD FROM FLANGE FACE | B-A | B1.30 | UT | | | SO23-XXVII-3.50.5 |
| 02-001-020-B | UPPER SHELL TO FLANGE WELD FROM FLANGE ID | B-A | B1.30 | UT | | | SO23-XXVII-3.50.9 |
| 02-001-021-R | HOT LEG NOZZLE INNER RADIUS @ 0 DEGREES | B-D | B3.100 | | | VT-1 | SO23-XXVII-3.50.7 |
| 02-001-021-W | HOT LEG NOZZLE TO SHELL WELD @ 0 DEGREES | B-D | B3.90 | UT | | | SO23-XXVII-3 50.8, SO23-XXVII-3.50.9 |
| 02-001-022-R | COLD LEG NOZZLE INNER RADIUS @ 60 DEGREES | B-D | B3.100 | | | VT-1 | SO23-XXVII-3 50.7 |
| 02-001-022-W | COLD LEG NOZZLE TO SHELL WELD @ 60 DEGREES | B-D | B3.90 | UT | | | SO23-XXVII-3.50.8, SO23-XXVII-3.50.9 |
| 02-001-023-R | COLD LEG NOZZLE INNER RADIUS @ 120 DEGREES | B-D | B3.100 | | | VT-1 | SO23-XXVII-3.50.7 |
| 02-001-023-W | COLD LEG NOZZLE TO SHELL WELD @ 120 DEGREES | B-D | B3.90 | UT | | | SO23-XXVII-3.50 8, SO23-XXVII-3.50.9 |
| 02-001-024-R | HOT LEG NOZZLE INNER RADIUS @ 180 DEGREES | B-D | B3.100 | | | VT-1 | SO23-XXVII-3.50.7 |
| 02-001-024-W | HOT LEG NOZZLE TO SHELL WELD @ 180 DEGREES | B-D | B3.90 | UT | | | SO23-XXVII-3.50.8, SO23-XXVII-3 50 9 |
| 02-001-025-R | COLD LEG NOZZLE INNER RADIUS @ 240 DEGREES | B-D | B3.100 | | | VT-1 | SO23-XXVII-3.50.7 |
| 02-001-025-W | COLD LEG NOZZLE TO SHELL WELD @ 240 DEGREES | B-D | B3.90 | UT | | | SO23-XXVII-3.50.8, SO23-XXVII-3.50.9 |
| 02-001-026-R | COLD LEG NOZZLE INNER RADIUS @ 300 DEGREES | B-D | B3.100 | | | VT-1 | SO23-XXVII-3.50.7 |
| 02-001-026-W | COLD LEG NOZZLE TO SHELL WELD @ 300 DEGREES | B-D | B3.90 | UT | | | SO23-XXVII-3.50 8, SO23-XXVII-3.50.9 |
| 02-001-033 | HOT LEG NOZZLE-TO-EXTENSION WELD @ 0 DEGREES | B-J | B9.11 | UT | | | SO23-XXVII-3.50.9 |
| 02-001-034 | COLD LEG NOZZLE-TO-EXTENSION WELD @ 60 DEGREES | B-J | B9.11 | UT | | | SO23-XXVII-3.50 9 |
| 02-001-035 | COLD LEG NOZZLE-TO-EXTENSION WELD @ 120 DEGREES | B-J | B9.11 | UT | | | SO23-XXVII-3.50.9 |
| 02-001-036 | HOT LEG NOZZLE-TO-EXTENSION WELD @ 180 DEGREES | B-J | B9.11 | UT | | | SO23-XXVII-3.50 9 |
| 02-001-037 | COLD LEG NOZZLE-TO-EXTENSION WELD @ 240 DEGREES | B-J | B9.11 | UT | | | SO23-XXVII-3.50.9 |
| 02-001-038 | COLD LEG NOZZLE-TO-EXTENSION WELD @ 300 DEGREES | B-J | B9.11 | UT | | | SO23-XXVII-3.50 9 |
| 02-001-039 | CORE STABILIZING LUG @ 0 DEGREES | BN2 | B13.60 | | | VT-3 | SO23-XXVII-3.50.7 |
| 02-001-040 | CORE STABILIZING LUG @ 60 DEGREES | BN2 | B13 60 | | | VT-3 | SO23-XXVII-3.50.7 |
| 02-001-041 | CORE STABILIZING LUG @ 120 DEGREES | BN2 | B13.60 | | | VT-3 | SO23-XXVII-3.50.7 |
| 02-001-042 | CORE STABILIZING LUG @ 180 DEGREES | BN2 | B13.60 | | | VT-3 | SO23-XXVII-3.50.7 |
| 02-001-043 | CORE STABILIZING LUG @ 240 DEGREES | BN2 | B13.60 | | | VT-3 | SO23-XXVII-3.50.7 |
| 02-001-044 | CORE STABILIZING LUG @ 300 DEGREES | BN2 | B13.60 | | | VT-3 | SO23-XXVII-3.50.7 |

## ISI U2C12 COMPLETED EXAMINATIONS

| | | | | | | | |
|---|---|---|---|---|---|---|---|
| 02-001-045 | CORE STOP LUG @ 10 DEGREES | BN2 | B13.60 | | | VT-3 | SO23-XXVII-3.50.7 |
| 02-001-046 | CORE STOP LUG @ 40 DEGREES | BN2 | B13 60 | | | VT-3 | SO23-XXVII-3.50.7 |
| 02-001-047 | CORE STOP LUG @ 85 DGEREES | BN2 | B13.60 | | | VT-3 | SO23-XXVII-3.50.7 |
| 02-001-048 | CORE STOP LUG @ 130 DEGREES | BN2 | B13.60 | | | VT-3 | SO23-XXVII-3.50.7 |
| 02-001-049 | CORE STOP LUG @ 160 DEGREES | BN2 | B13 60 | | | VT-3 | SO23-XXVII-3.50.7 |
| 02-001-050 | CORE STOP LUG @ 205 DEGREES | BN2 | B13 60 | | | VT-3 | SO23-XXVII-3.50.7 |
| 02-001-051 | CORE STOP LUG @ 250 DEGREES | BN2 | B13.60 | | | VT-3 | SO23-XXVII-3.50.7 |
| 02-001-052 | CORE STOP LUG @ 280 DEGREES | BN2 | B13.60 | | | VT-3 | SO23-XXVII-3.50.7 |
| 02-001-053 | CORE STOP LUG @ 325 DEGREES | BN2 | B13.60 | | | VT-3 | SO23-XXVII-3.50.7 |
| 02-001-054-37 | REACTOR VESSEL FLANGE LIGAMENT #37 | BG1 | B6.40 | UT | | | SO23-XXVII-3.50 6 |
| 02-001-054-38 | REACTOR VESSEL FLANGE LIGAMENT #38 | BG1 | B6.40 | UT | | | SO23-XXVII-3.50 6 |
| 02-001-054-39 | REACTOR VESSEL FLANGE LIGAMENT #39 | BG1 | B6.40 | UT | | | SO23-XXVII-3.50.6 |
| 02-001-054-40 | REACTOR VESSEL FLANGE LIGAMENT #40 | BG1 | B6.40 | UT | | | SO23-XXVII-3.50.6 |
| 02-001-054-41 | REACTOR VESSEL FLANGE LIGAMENT #41 | BG1 | B6.40 | UT | | | SO23-XXVII-3.50.6 |
| 02-001-054-42 | REACTOR VESSEL FLANGE LIGAMENT #42 | BG1 | B6.40 | UT | | | SO23-XXVII-3.50.6 |
| 02-001-054-43 | REACTOR VESSEL FLANGE LIGAMENT #43 | BG1 | B6.40 | UT | | | SO23-XXVII-3.50.6 |
| 02-001-054-44 | REACTOR VESSEL FLANGE LIGAMENT #44 | BG1 | B6.40 | UT | | | SO23-XXVII-3.50.6 |
| 02-001-054-45 | REACTOR VESSEL FLANGE LIGAMENT #45 | BG1 | B6.40 | UT | | | SO23-XXVII-3.50.6 |
| 02-001-054-46 | REACTOR VESSEL FLANGE LIGAMENT #46 | BG1 | B6.40 | UT | | | SO23-XXVII-3.50.6 |
| 02-001-054-47 | REACTOR VESSEL FLANGE LIGAMENT #47 | BG1 | B6.40 | UT | | | SO23-XXVII-3.50.6 |
| 02-001-054-48 | REACTOR VESSEL FLANGE LIGAMENT #48 | BG1 | B6.40 | UT | | | SO23-XXVII-3.50 6 |
| 02-001-054-49 | REACTOR VESSEL FLANGE LIGAMENT #49 | BG1 | B6.40 | UT | | | SO23-XXVII-3.50.6 |
| 02-001-054-50 | REACTOR VESSEL FLANGE LIGAMENT #50 | BG1 | B6.40 | UT | | | SO23-XXVII-3.50.6 |
| 02-001-054-51 | REACTOR VESSEL FLANGE LIGAMENT #51 | BG1 | B6.40 | UT | | | SO23-XXVII-3 50 6 |
| 02-001-054-52 | REACTOR VESSEL FLANGE LIGAMENT #52 | BG1 | B6.40 | UT | | | SO23-XXVII-3.50 6 |
| 02-001-054-53 | REACTOR VESSEL FLANGE LIGAMENT #53 | BG1 | B6.40 | UT | | | SO23-XXVII-3.50.6 |
| 02-001-054-54 | REACTOR VESSEL FLANGE LIGAMENT #54 | BG1 | B6 40 | UT | | | SO23-XXVII-3.50 6 |
| 02-001-056-37 | REACTOR VESSEL CLOSURE STUD #37 | BG1 | B6.30 | UT | MT | | SO23-XXVII-30.7, SO23-XXVII-20.47 |
| 02-001-056-38 | REACTOR VESSEL CLOSURE STUD #38 | BG1 | B6.30 | UT | MT | | SO23-XXVII-30.7, SO23-XXVII-20 47 |
| 02-001-056-39 | REACTOR VESSEL CLOSURE STUD #39 | BG1 | B6 30 | UT | MT | | SO23-XXVII-30.7, SO23-XXVII-20.47 |
| 02-001-056-40 | REACTOR VESSEL CLOSURE STUD #40 | BG1 | B6.30 | UT | MT | | SO23-XXVII-30.7, SO23-XXVII-20.47 |
| 02-001-056-41 | REACTOR VESSEL CLOSURE STUD #41 | BG1 | B6.30 | UT | MT | | SO23-XXVII-30.7, SO23-XXVII-20.47 |
| 02-001-056-42 | REACTOR VESSEL CLOSURE STUD #42 | BG1 | B6.30 | UT | MT | | SO23-XXVII-30.7, SO23-XXVII-20.47 |
| 02-001-056-43 | REACTOR VESSEL CLOSURE STUD #43 | BG1 | B6.30 | UT | MT | | SO23-XXVII-30.7, SO23-XXVII-20.47 |
| 02-001-056-44 | REACTOR VESSEL CLOSURE STUD #44 | BG1 | B6.30 | UT | MT | | SO23-XXVII-30.7, SO23-XXVII-20.47 |
| 02-001-056-45 | REACTOR VESSEL CLOSURE STUD #45 | BG1 | B6.30 | UT | MT | | SO23-XXVII-30.7, SO23-XXVII-20.47 |
| 02-001-056-46 | REACTOR VESSEL CLOSURE STUD #46 | BG1 | B6.30 | UT | MT | | SO23-XXVII-30.7, SO23-XXVII-20.47 |
| 02-001-056-47 | REACTOR VESSEL CLOSURE STUD #47 | BG1 | B6.30 | UT | MT | | SO23-XXVII-30.7, SO23-XXVII-20.47 |
| 02-001-056-48 | REACTOR VESSEL CLOSURE STUD #48 | BG1 | B6.30 | UT | MT | | SO23-XXVII-30.7, SO23-XXVII-20.47 |
| 02-001-056-49 | REACTOR VESSEL CLOSURE STUD #49 | BG1 | B6.30 | UT | MT | | SO23-XXVII-30.7, SO23-XXVII-20.47 |
| 02-001-056-50 | REACTOR VESSEL CLOSURE STUD #50 | BG1 | B6.30 | UT | MT | | SO23-XXVII-30.7, SO23-XXVII-20.47 |
| 02-001-056-51 | REACTOR VESSEL CLOSURE STUD #51 | BG1 | B6.30 | UT | MT | | SO23-XXVII-30.7, SO23-XXVII-20.47 |
| 02-001-056-52 | REACTOR VESSEL CLOSURE STUD #52 | BG1 | B6.30 | UT | MT | | SO23-XXVII-30.7, SO23-XXVII-20.47 |
| 02-001-056-53 | REACTOR VESSEL CLOSURE STUD #53 | BG1 | B6.30 | UT | MT | | SO23-XXVII-30.7, SO23-XXVII-20.47 |
| 02-001-056-54 | REACTOR VESSEL CLOSURE STUD #54 | BG1 | B6.30 | UT | MT | | SO23-XXVII-30.7, SO23-XXVII-20.47 |
| 02-001-057-37 | REACTOR VESSEL CLOSURE NUT #37 | BG1 | B6.10 | | MT | | SO23-XXVII-20.47 |

## ISI U2C12 COMPLETED EXAMINATIONS

| | | | | | | | |
|---|---|---|---|---|---|---|---|
| 02-001-057-38 | REACTOR VESSEL CLOSURE NUT #38 | BG1 | B6.10 | | MT | | SO23-XXVII-20.47 |
| 02-001-057-39 | REACTOR VESSEL CLOSURE NUT #39 | BG1 | B6.10 | | MT | | SO23-XXVII-20.47 |
| 02-001-057-40 | REACTOR VESSEL CLOSURE NUT #40 | BG1 | B6.10 | | MT | | SO23-XXVII-20 47 |
| 02-001-057-41 | REACTOR VESSEL CLOSURE NUT #41 | BG1 | B6.10 | | MT | | SO23-XXVII-20.47 |
| 02-001-057-42 | REACTOR VESSEL CLOSURE NUT #42 | BG1 | B6.10 | | MT | | SO23-XXVII-20.47 |
| 02-001-057-43 | REACTOR VESSEL CLOSURE NUT #43 | BG1 | B6.10 | | MT | | SO23-XXVII-20.47 |
| 02-001-057-44 | REACTOR VESSEL CLOSURE NUT #44 | BG1 | B6 10 | | MT | | SO23-XXVII-20.47 |
| 02-001-057-45 | REACTOR VESSEL CLOSURE NUT #45 | BG1 | B6 10 | | MT | | SO23-XXVII-20.47 |
| 02-001-057-46 | REACTOR VESSEL CLOSURE NUT #46 | BG1 | B6.10 | | MT | | SO23-XXVII-20.47 |
| 02-001-057-47 | REACTOR VESSEL CLOSURE NUT #47 | BG1 | B6.10 | | MT | | SO23-XXVII-20.47 |
| 02-001-057-48 | REACTOR VESSEL CLOSURE NUT #48 | BG1 | B6.10 | | MT | | SO23-XXVII-20.47 |
| 02-001-057-49 | REACTOR VESSEL CLOSURE NUT #49 | BG1 | B6.10 | | MT | | SO23-XXVII-20.47 |
| 02-001-057-50 | REACTOR VESSEL CLOSURE NUT #50 | BG1 | B6.10 | | MT | | SO23-XXVII-20.47 |
| 02-001-057-51 | REACTOR VESSEL CLOSURE NUT #51 | BG1 | B6.10 | | MT | | SO23-XXVII-20.47 |
| 02-001-057-52 | REACTOR VESSEL CLOSURE NUT #52 | BG1 | B6.10 | | MT | | SO23-XXVII-20.47 |
| 02-001-057-53 | REACTOR VESSEL CLOSURE NUT #53 | BG1 | B6.10 | | MT | | SO23-XXVII-20.47 |
| 02-001-057-54 | REACTOR VESSEL CLOSURE NUT #54 | BG1 | B6.10 | | MT | | SO23-XXVII-20.47 |
| 02-001-058-37 | REACTOR VESSEL CLOSURE WASHER #37 | BG1 | B6.50 | | | VT-1 | SO23-XXVII-20.49 |
| 02-001-058-38 | REACTOR VESSEL CLOSURE WASHER #38 | BG1 | B6.50 | | | VT-1 | SO23-XXVII-20.49 |
| 02-001-058-39 | REACTOR VESSEL CLOSURE WASHER #39 | BG1 | B6.50 | | | VT-1 | SO23-XXVII-20.49 |
| 02-001-058-40 | REACTOR VESSEL CLOSURE WASHER #40 | BG1 | B6.50 | | | VT-1 | SO23-XXVII-20.49 |
| 02-001-058-41 | REACTOR VESSEL CLOSURE WASHER #41 | BG1 | B6.50 | | | VT-1 | SO23-XXVII-20.49 |
| 02-001-058-42 | REACTOR VESSEL CLOSURE WASHER #42 | BG1 | B6.50 | | | VT-1 | SO23-XXVII-20.49 |
| 02-001-058-43 | REACTOR VESSEL CLOSURE WASHER #43 | BG1 | B6.50 | | | VT-1 | SO23-XXVII-20 49 |
| 02-001-058-44 | REACTOR VESSEL CLOSURE WASHER #44 | BG1 | B6.50 | | | VT-1 | SO23-XXVII-20.49 |
| 02-001-058-45 | REACTOR VESSEL CLOSURE WASHER #45 | BG1 | B6.50 | | | VT-1 | SO23-XXVII-20.49 |
| 02-001-058-46 | REACTOR VESSEL CLOSURE WASHER #46 | BG1 | B6.50 | | | VT-1 | SO23-XXVII-20.49 |
| 02-001-058-47 | REACTOR VESSEL CLOSURE WASHER #47 | BG1 | B6.50 | | | VT-1 | SO23-XXVII-20.49 |
| 02-001-058-48 | REACTOR VESSEL CLOSURE WASHER #48 | BG1 | B6.50 | | | VT-1 | SO23-XXVII-20.49 |
| 02-001-058-49 | REACTOR VESSEL CLOSURE WASHER #49 | BG1 | B6.50 | | | VT-1 | SO23-XXVII-20.49 |
| 02-001-058-50 | REACTOR VESSEL CLOSURE WASHER #50 | BG1 | B6 50 | | | VT-1 | SO23-XXVII-20.49 |
| 02-001-058-51 | REACTOR VESSEL CLOSURE WASHER #51 | BG1 | B6.50 | | | VT-1 | SO23-XXVII-20.49 |
| 02-001-058-52 | REACTOR VESSEL CLOSURE WASHER #52 | BG1 | B6.50 | | | VT-1 | SO23-XXVII-20.49 |
| 02-001-058-53 | REACTOR VESSEL CLOSURE WASHER #53 | BG1 | B6.50 | | | VT-1 | SO23-XXVII-20.49 |
| 02-001-058-54 | REACTOR VESSEL CLOSURE WASHER #54 | BG1 | B6.50 | | | VT-1 | SO23-XXVII-20.49 |
| 02-001-059 | MATERIAL SURVEILLANCE HOLDER @ 83 DEGREES | BN2 | B13.50 | | | VT-1 | SO23-XXVII-3.50.7 |
| 02-001-060 | MATERIAL SURVEILLANCE HOLDER @ 97 DGEREES | BN2 | B13.50 | | | VT-1 | SO23-XXVII-3.50.7 |
| 02-001-061 | MATERIAL SURVEILLANCE HOLDER @ 104 DGEREES | BN2 | B13 50 | | | VT-1 | SO23-XXVII-3.50.7 |
| 02-001-062 | MATERIAL SURVEILLANCE HOLDER @ 263 DEGREES | BN2 | B13 50 | | | VT-1 | SO23-XXVII-3.50.7 |
| 02-001-063 | MATERIAL SURVEILLANCE HOLDER @ 277 DEGREES | BN2 | B13.50 | | | VT-1 | SO23-XXVII-3 50.7 |
| 02-001-064 | MATERIAL SURVEILLANCE HOLDER @ 284 DEGREES | BN2 | B13.50 | | | VT-1 | SO23-XXVII-3.50.7 |
| 02-001-065 | FLOW BAFFLE | BN2 | B13.60 | | | VT-3 | SO23-XXVII-3.50.7 |
| 02-001-070 | CORE SUPPORT BARREL | BN3 | B13.70 | | | VT-3 | SO23-XXVII-3.50.7 |
| 02-001-071 | UPPER GUIDE STRUCTURE | BN3 | B13.70 | | | VT-3 | SO23-XXVII-3.50.7 |
| 02-001-072 | ALIGNMENT KEY @ 0 DEGREES | BN2 | B13.50 | | | VT-1 | SO23-XXVII-3.50.7 |
| 02-001-073 | ALIGNMENT KEY @ 90 DEGREES | BN2 | B13.50 | | | VT-1 | SO23-XXVII-3.50.7 |

## ISI U2C12 COMPLETED EXAMINATIONS

| | | | | | | | |
|---|---|---|---|---|---|---|---|
| 02-001-074 | ALIGNMENT KEY @ 180 DEGREES | BN2 | B13.50 | | | VT-1 | SO23-XXVII-3.50.7 |
| 02-001-075 | ALIGNMENT KEY @ 270 DEGREES | BN2 | B13.50 | | | VT-1 | SO23-XXVII-3.50.7 |
| 02-001-076 | GUIDE LUG @ 70 DEGREES | BN2 | B13.50 | | | VT-1 | SO23-XXVII-3.50.7 |
| 02-001-077 | GUIDE LUG @ 160 DEGREES | BN2 | B13.50 | | | VT-1 | SO23-XXVII-3.50.7 |
| 02-001-078 | GUIDE LUG @ 250 DEGREES | BN2 | B13.50 | | | VT-1 | SO23-XXVII-3.50.7 |
| 02-001-079 | GUIDE LUG @ 340 DEGREES | BN2 | B13.50 | | | VT-1 | SO23-XXVII-3.50.7 |
| 02-001-080 | AREAS ABOVE AND BELOW REACTOR CORE | BN1 | B13.10 | | | VT-3 | SO23-XXVII-3.50.7 |
| 02-002-005 | PEEL SEGMENT WELD @ 234 DEGREES | B-A | B1.22 | UT | | | SO23-XXVII-30.10 |
| 02-002-006 | PEEL SEGMENT WELD @ 306 DEGREES | B-A | B1.22 | UT | | | SO23-XXVII-30.10 |
| 02-002-018-60 | LOWER MOTOR HOUSING WELD - CEDM #60 (FORMERLY ISI #02-002-018-01) | B-O | B14.10 | | PT | | SO23-XXVII-20.48 |
| 02-002-018-61 | LOWER MOTOR HOUSING WELD - CEDM #61 (FORMERLY ISI #02-002-018-02) | B-O | B14.10 | | PT | | SO23-XXVII-20.48 |
| 02-002-018-69 | LOWER MOTOR HOUSING WELD - CEDM #69 (FORMERLY ISI #02-002-018-10) | B-O | B14.10 | | PT | | SO23-XXVII-20 48 |
| 02-002-018-70 | LOWER MOTOR HOUSING WELD - CEDM #70 (FORMERLY ISI #02-002-018-11) | B-O | B14.10 | | PT | | SO23-XXVII-20 48 |
| 02-002-018-72 | LOWER MOTOR HOUSING WELD - CEDM #72 (FORMERLY ISI #02-002-018-13) | B-O | B14.10 | | PT | | SO23-XXVII-20.48 |
| 02-002-018-80 | LOWER MOTOR HOUSING WELD - CEDM #80 (FORMERLY ISI #02-002-018-21) | B-O | B14.10 | | PT | | SO23-XXVII-20.48 |
| 02-002-018-81 | LOWER MOTOR HOUSING WELD - CEDM #81 (FORMERLY ISI #02-002-018-22) | B-O | B14.10 | | PT | | SO23-XXVII-20.48 |
| 02-002-018-85 | LOWER MOTOR HOUSING WELD - CEDM #85 (FORMERLY ISI #02-002-018-26) | B-O | B14.10 | | PT | | SO23-XXVII-20 48 |
| 02-002-018-86 | LOWER MOTOR HOUSING WELD - CEDM #86 (FORMERLY ISI #02-002-018-27) | B-O | B14.10 | | PT | | SO23-XXVII-20 48 |
| 02-002-018-89 | LOWER MOTOR HOUSING WELD - CEDM #89 (FORMERLY ISI #02-002-018-30) | B-O | B14.10 | | PT | | SO23-XXVII-20.48 |
| 02-002-019-60 | UPPER MOTOR HOUSING WELD - CEDM #60 (FORMERLY ISI #02-002-019-01) | B-O | B14.10 | | PT | | SO23-XXVII-20.48 |
| 02-002-019-61 | UPPER MOTOR HOUSING WELD - CEDM #61 (FORMERLY ISI #02-002-019-02) | B-O | B14.10 | | PT | | SO23-XXVII-20.48 |
| 02-002-019-69 | UPPER MOTOR HOUSING WELD - CEDM #69 (FORMERLY ISI #02-002-019-10) | B-O | B14.10 | | PT | | SO23-XXVII-20.48 |
| 02-002-019-70 | UPPER MOTOR HOUSING WELD - CEDM #70 (FORMERLY ISI #02-002-019-11) | B-O | B14.10 | | PT | | SO23-XXVII-20 48 |
| 02-002-019-72 | UPPER MOTOR HOUSING WELD - CEDM #72 (FORMERLY ISI #02-002-019-13) | B-O | B14.10 | | PT | | SO23-XXVII-20.48 |
| 02-002-019-80 | UPPER MOTOR HOUSING WELD - CEDM #80 (FORMERLY ISI #02-002-019-21) | B-O | B14.10 | | PT | | SO23-XXVII-20.48 |
| 02-002-019-81 | UPPER MOTOR HOUSING WELD - CEDM #81 (FORMERLY ISI #02-002-019-22) | B-O | B14.10 | | PT | | SO23-XXVII-20.48 |
| 02-002-019-85 | UPPER MOTOR HOUSING WELD - CEDM #85 (FORMERLY ISI #02-002-019-26) | B-O | B14.10 | | PT | | SO23-XXVII-20.48 |
| 02-002-019-86 | UPPER MOTOR HOUSING WELD - CEDM #86 (FORMERLY ISI #02-002-019-27) | B-O | B14.10 | | PT | | SO23-XXVII-20 48 |
| 02-002-019-89 | UPPER MOTOR HOUSING WELD - CEDM #89 (FORMERLY ISI #02-002-019-30) | B-O | B14.10 | | PT | | SO23-XXVII-20.48 |
| 02-002-020-60 | LOWER PRESSURE TUBE WELD - CEDM #60 (FORMERLY #02-002-020-01) | B-O | B14.10 | | PT | | SO23-XXVII-20.48 |
| 02-002-020-61 | LOWER PRESSURE TUBE WELD - CEDM #61 (FORMERLY #02-002-020-02) | B-O | B14.10 | | PT | | SO23-XXVII-20 48 |
| 02-002-020-69 | LOWER PRESSURE TUBE WELD - CEDM #69 (FORMERLY #02-002-020-10) | B-O | B14.10 | | PT | | SO23-XXVII-20.48 |
| 02-002-020-70 | LOWER PRESSURE TUBE WELD - CEDM #70 (FORMERLY #02-002-020-11) | B-O | B14.10 | | PT | | SO23-XXVII-20.48 |
| 02-002-020-72 | LOWER PRESSURE TUBE WELD - CEDM #72 (FORMERLY #02-002-020-13) | B-O | B14.10 | | PT | | SO23-XXVII-20.48 |
| 02-002-020-80 | LOWER PRESSURE TUBE WELD - CEDM #80 (FORMERLY #02-002-020-21) | B-O | B14.10 | | PT | | SO23-XXVII-20.48 |
| 02-002-020-81 | LOWER PRESSURE TUBE WELD - CEDM #81 (FORMERLY #02-002-020-22) | B-O | B14.10 | | PT | | SO23-XXVII-20.48 |
| 02-002-020-85 | LOWER PRESSURE TUBE WELD - CEDM #85 (FORMERLY #02-002-020-26) | B-O | B14.10 | | PT | | SO23-XXVII-20.48 |
| 02-002-020-86 | LOWER PRESSURE TUBE WELD - CEDM #86 (FORMERLY #02-002-020-27) | B-O | B14.10 | | PT | | SO23-XXVII-20.48 |
| 02-002-020-89 | LOWER PRESSURE TUBE WELD - CEDM #89 (FORMERLY #02-002-020-30) | B-O | B14.10 | | PT | | SO23-XXVII-20 48 |
| 02-002-021-60 | UPPER PRESSURE TUBE WELD - CEDM #60 (FORMERLY #02-002-021-01) | B-O | B14.10 | | PT | | SO23-XXVII-20.48 |
| 02-002-021-61 | UPPER PRESSURE TUBE WELD - CEDM #61 (FORMERLY #02-002-021-02) | B-O | B14.10 | | PT | | SO23-XXVII-20.48 |
| 02-002-021-69 | UPPER PRESSURE TUBE WELD - CEDM #69 (FORMERLY #02-002-021-10) | B-O | B14.10 | | PT | | SO23-XXVII-20.48 |
| 02-002-021-70 | UPPER PRESSURE TUBE WELD - CEDM #70 (FORMERLY #02-002-021-11) | B-O | B14.10 | | PT | | SO23-XXVII-20 48 |
| 02-002-021-72 | UPPER PRESSURE TUBE WELD - CEDM #72 (FORMERLY #02-002-021-13) | B-O | B14.10 | | PT | | SO23-XXVII-20.48 |
| 02-002-021-80 | UPPER PRESSURE TUBE WELD - CEDM #80 (FORMERLY #02-002-021-21) | B-O | B14.10 | | PT | | SO23-XXVII-20.48 |
| 02-002-021-81 | UPPER PRESSURE TUBE WELD - CEDM #81 (FORMERLY #02-002-021-22) | B-O | B14.10 | | PT | | SO23-XXVII-20.48 |

## ISI U2C12 COMPLETED EXAMINATIONS

| | | | | | | | |
|---|---|---|---|---|---|---|---|
| 02-002-021-85 | UPPER PRESSURE TUBE WELD - CEDM #85 (FORMERLY #02-002-021-26) | B-O | B14.10 | | PT | | SO23-XXVII-20.48 |
| 02-002-021-86 | UPPER PRESSURE TUBE WELD - CEDM #86 (FORMERLY #02-002-021-27) | B-O | B14.10 | | PT | | SO23-XXVII-20 48 |
| 02-002-021-89 | UPPER PRESSURE TUBE WELD - CEDM #89 (FORMERLY #02-002-021-30) | B-O | B14.10 | | PT | | SO23-XXVII-20.48 |
| 02-003-001 | SUPPORT SKIRT TO STAY BASE WELD | B-K | B10.10 | | MT | | SO23-XXVII-20.47 |
| 02-003-023 | MNSA SEAL ASSEMBLY FOR 2PDT0978-2 (BOLTING) | BG2 | B7.30 | | | | SO23-XXVII-20.49 |
| 02-003-026 | MNSA SEAL ASSEMBLY FOR 2PDT0978-1 (BOLTING) | BG2 | B7.30 | | | | SO23-XXVII-20.49 |
| 02-003-027-14 | PRIMARY MANWAY STUD @ 0 DEGREES | BG2 | B7.30 | | | VT-1 | SO23-XXVII-20.49 |
| 02-003-027-15 | PRIMARY MANWAY STUD @ 0 DEGREES | BG2 | B7.30 | | | VT-1 | SO23-XXVII-20.49 |
| 02-003-027-16 | PRIMARY MANWAY STUD @ 0 DEGREES | BG2 | B7.30 | | | VT-1 | SO23-XXVII-20.49 |
| 02-003-027-17 | PRIMARY MANWAY STUD @ 0 DEGREES | BG2 | B7.30 | | | VT-1 | SO23-XXVII-20.49 |
| 02-003-027-18 | PRIMARY MANWAY STUD @ 0 DEGREES | BG2 | B7.30 | | | VT-1 | SO23-XXVII-20.49 |
| 02-003-027-19 | PRIMARY MANWAY STUD @ 0 DEGREES | BG2 | B7.30 | | | VT-1 | SO23-XXVII-20.49 |
| 02-003-027-20 | PRIMARY MANWAY STUD @ 0 DEGREES | BG2 | B7.30 | | | VT-1 | SO23-XXVII-20.49 |
| 02-003-028-14 | PRIMARY MANWAY NUT @ 0 DEGREES | BG2 | B7.30 | | | VT-1 | SO23-XXVII-20.49 |
| 02-003-028-15 | PRIMARY MANWAY NUT @ 0 DEGREES | BG2 | B7.30 | | | VT-1 | SO23-XXVII-20.49 |
| 02-003-028-16 | PRIMARY MANWAY NUT @ 0 DEGREES | BG2 | B7.30 | | | VT-1 | SO23-XXVII-20.49 |
| 02-003-028-17 | PRIMARY MANWAY NUT @ 0 DEGREES | BG2 | B7.30 | | | VT-1 | SO23-XXVII-20.49 |
| 02-003-028-18 | PRIMARY MANWAY NUT @ 0 DEGREES | BG2 | B7.30 | | | VT-1 | SO23-XXVII-20.49 |
| 02-003-028-19 | PRIMARY MANWAY NUT @ 0 DEGREES | BG2 | B7.30 | | | VT-1 | SO23-XXVII-20.49 |
| 02-003-028-20 | PRIMARY MANWAY NUT @ 0 DEGREES | BG2 | B7.30 | | | VT-1 | SO23-XXVII-20.49 |
| 02-003-029-15 | PRIMARY MANWAY STUD @ 112 DEGREES, 30 MINUTES | BG2 | B7.30 | | | VT-1 | SO23-XXVII-20.49 |
| 02-003-029-16 | PRIMARY MANWAY STUD @ 112 DEGREES, 30 MINUTES | BG2 | B7.30 | | | VT-1 | SO23-XXVII-20.49 |
| 02-003-029-17 | PRIMARY MANWAY STUD @ 112 DEGREES, 30 MINUTES | BG2 | B7.30 | | | VT-1 | SO23-XXVII-20.49 |
| 02-003-029-18 | PRIMARY MANWAY STUD @ 112 DEGREES, 30 MINUTES | BG2 | B7.30 | | | VT-1 | SO23-XXVII-20.49 |
| 02-003-029-19 | PRIMARY MANWAY STUD @ 112 DEGREES, 30 MINUTES | BG2 | B7.30 | | | VT-1 | SO23-XXVII-20.49 |
| 02-003-029-20 | PRIMARY MANWAY STUD @ 112 DEGREES, 30 MINUTES | BG2 | B7.30 | | | VT-1 | SO23-XXVII-20.49 |
| 02-003-030-15 | PRIMARY MANWAY NUT @ 112 DEGREES, 30 MINUTES | BG2 | B7.30 | | | VT-1 | SO23-XXVII-20.49 |
| 02-003-030-16 | PRIMARY MANWAY NUT @ 112 DEGREES, 30 MINUTES | BG2 | B7.30 | | | VT-1 | SO23-XXVII-20.49 |
| 02-003-030-17 | PRIMARY MANWAY NUT @ 112 DEGREES, 30 MINUTES | BG2 | B7.30 | | | VT-1 | SO23-XXVII-20 49 |
| 02-003-030-18 | PRIMARY MANWAY NUT @ 112 DEGREES, 30 MINUTES | BG2 | B7.30 | | | VT-1 | SO23-XXVII-20.49 |
| 02-003-030-19 | PRIMARY MANWAY NUT @ 112 DEGREES, 30 MINUTES | BG2 | B7.30 | | | VT-1 | SO23-XXVII-20.49 |
| 02-003-030-20 | PRIMARY MANWAY NUT @ 112 DEGREES, 30 MINUTES | BG2 | B7.30 | | | VT-1 | SO23-XXVII-20.49 |
| 02-003-036 | SUPPORT SKIRT | F-A | F1.40B | | | VT-3 | SO23-XXVII-20.51 |
| 02-004-010 | INLET NOZZLE-TO-HEAD WELD | B-D | B3.130 | UT | | | SO23-XXVII-20.66 |
| 02-004-011 | OUTLET NOZZLE-TO-HEAD WELD @45 DEGREES | B-D | B3.130 | UT | | | SO23-XXVII-20.66 |
| 02-004-012 | OUTLET NOZZLE-TO-HEAD WELD @ 315 DEGREES | B-D | B3.130 | UT | | | SO23-XXVII-20.66 |
| 02-004-017 | INLET NOZZLE INNER RADIUS | B-D | B3.140 | UT | | | SO23-XXVII-20.52 |
| 02-004-018 | OUTLET NOZZLE INNER RADIUS @ 45 DEGREES | B-D | B3.140 | UT | | | SO23-XXVII-20.52 |
| 02-004-019 | OUTLET NOZZLE INNER RADIUS @ 315 DEGREES | B-D | B3.140 | UT | | | SO23-XXVII-20.52 |
| 02-004-022 | STAY CYLINDER EXTENSION-TO-TUBE SHEET WELD | B-B | B2.40 | UT | | | SO23-XXVII-20.66 |
| 02-005-006 | UPPER SHELL LONGITUDINAL WELD @ 45 DGRS | B-B | B2.12 | UT | | | SO23-XXVII-20 66 |
| 02-005-008 | UPPER SHELL-TO-TOP HEAD GIRTH WELD | B-B | B2.11 | UT | | | SO23-XXVII-20.66 |
| 02-005-011 | SAFETY NOZZLE-TO-TOP HEAD WELD @ 45 DEGREES | B-D | B3.110 | UT | | | SO23-XXVII-20.66 |
| 02-005-012 | SAFETY NOZZLE-TO-TOP HEAD WELD @ 225 DEGREES | B-D | B3.110 | UT | | | SO23-XXVII-20.66 |
| 02-005-013 | SAFETY NOZZLE-TO-TOP HEAD WELD @ 315 DEGREES | B-D | B3.110 | UT | | | SO23-XXVII-20.66 |
| 02-005-016 | SAFETY NOZZLE INNER RADIUS @ 45 DEGREES | B-D | B3.120 | UT | | | SO23-XXVII-20.52 |

## ISI U2C12 COMPLETED EXAMINATIONS

| | | | | | | | |
|---|---|---|---|---|---|---|---|
| 02-005-017 | SAFETY NOZZLE INNER RADIUS @ 225 DEGREES | B-D | B3.120 | UT | | | SO23-XXVII-20 52 |
| 02-005-018 | SAFETY NOZZLE INNER RADIUS @ 315 DEGREES | B-D | B3.120 | UT | | | SO23-XXVII-20.52 |
| 02-005-019-15 | PRIMARY MANWAY BOLTING (STUD) | BG2 | B7.20 | | | VT-1 | SO23-XXVII-20.49 |
| 02-005-019-16 | PRIMARY MANWAY BOLTING (STUD) | BG2 | B7.20 | | | VT-1 | SO23-XXVII-20.49 |
| 02-005-019-17 | PRIMARY MANWAY BOLTING (STUD) | BG2 | B7.20 | | | VT-1 | SO23-XXVII-20.49 |
| 02-005-019-18 | PRIMARY MANWAY BOLTING (STUD) | BG2 | B7.20 | | | VT-1 | SO23-XXVII-20.49 |
| 02-005-019-19 | PRIMARY MANWAY BOLTING (STUD) | BG2 | B7.20 | | | VT-1 | SO23-XXVII-20.49 |
| 02-005-019-20 | PRIMARY MANWAY BOLTING (STUD) | BG2 | B7.20 | | | VT-1 | SO23-XXVII-20.49 |
| 02-005-020 | MNSA SEAL ASSEMBLY FOR 2LT-0110-1 (BOLTING) | BG2 | B7.20 | | | VT-1 | SO23-XXVII-20.49 |
| 02-005-021 | MNSA SEAL ASSEMBLY FOR 2LT-0110-2 (BOLTING) | BG2 | B7.20 | | | VT-1 | SO23-XXVII-20.49 |
| 02-005-027 | SAFETY NOZZLE-TO-SAFE END WELD @ 45 DEGREES | B-F | B5.40 | UT | PT | | SO23-XXVII-20.55, SO23-XXVII-20 48 |
| 02-005-028 | SAFETY NOZZLE-TO-SAFE END WELD @ 225 DEGREES | B-F | B5 40 | UT | PT | | SO23-XXVII-20.55, SO23-XXVII-20.48 |
| 02-005-029 | SAFETY NOZZLE-TO-SAFE END WELD @ 315 DEGREES | B-F | B5.40 | UT | PT | | SO23-XXVII-20.55, SO23-XXVII-20.48 |
| 02-005-030 | SPRAY NOZZLE-TO-SAFE END WELD | B-F | B5.40 | UT | PT | | SO23-XXVII-20 55, SO23-XXVII-20.48 |
| 02-005-037-015 | PRIMARY MANWAY BOLTING (NUT) | BG2 | B7.20 | | | VT-1 | SO23-XXVII-20.49 |
| 02-005-037-016 | PRIMARY MANWAY BOLTING (NUT) | BG2 | B7.20 | | | VT-1 | SO23-XXVII-20.49 |
| 02-005-037-017 | PRIMARY MANWAY BOLTING (NUT) | BG2 | B7.20 | | | VT-1 | SO23-XXVII-20.49 |
| 02-005-037-018 | PRIMARY MANWAY BOLTING (NUT) | BG2 | B7.20 | | | VT-1 | SO23-XXVII-20.49 |
| 02-005-037-019 | PRIMARY MANWAY BOLTING (NUT) | BG2 | B7.20 | | | VT-1 | SO23-XXVII-20.49 |
| 02-005-037-020 | PRIMARY MANWAY BOLTING (NUT) | BG2 | B7.20 | | | VT-1 | SO23-XXVII-20 49 |
| 02-006-005 RV | PIPE LONGITUDINAL WELD - RV END | B-J | B9.12 | UT | | | SO23-XXVII-3.50.9 |
| 02-006-006 RV | PIPE LONGITUDINAL WELD - RV END | B-J | B9.12 | UT | | | SO23-XXVII-3.50.9 |
| 02-006-007 | PIPE-TO-REACTOR VESSEL OUTLET NOZZLE EXTENSION PIECE WELD | B-J | B9.11 | UT | | | SO23-XXVII-3.50.9 |
| 02-006-008 | SURGE NOZZLE-TO-PIPE WELD | B-J | B9.31 | UT | MT | | SO23-XXVII-30.5, SO23-XXVII-20.47 |
| 02-007-005 RV | PIPE LONGITUDINAL WELD - RV END | B-J | B9.12 | UT | | | SO23-XXVII-3 50.9 |
| 02-007-006 RV | PIPE LONGITUDINAL WELD - RV END | B-J | B9.12 | UT | | | SO23-XXVII-3.50 9 |
| 02-007-007 | PIPE-TO-REACTOR VESSEL OUTLET NOZZLE EXTENSION PIECE WELD | B-J | B9.11 | UT | | | SO23-XXVII-3.50 9 |
| 02-009-006 RV | ELBOW LONGITUDINAL WELD - R.V.END (AREA 2C9, 30' ELEV.) | B-J | B9.12 | UT | | | SO23-XXVII-3.50.9 |
| 02-009-007 RV | ELBOW LONGITUDINAL WELD - R.V. END (AREA 2C9, 30' ELEV.) | B-J | B9.12 | UT | | | SO23-XXVII-3.50.9 |
| 02-009-008 | ELBOW-TO-RPV INLET NOZZLE EXTENSION PIECE WELD | B-J | B9.11 | UT | | | SO23-XXVII-3.50.9 |
| 02-010-019 | DRAIN NOZZLE-TO-SAFE END WELD 2" | B-F | B5.140 | | PT | | SO23-XXVII-20.48 |
| 02-011-006 RV | ELBOW LONGITUDINAL WELD - RV END | B-J | B9.12 | UT | | | SO23-XXVII-3.50.9 |
| 02-011-007 RV | ELBOW LONGITUDINAL WELD - RV END | B-J | B9.12 | UT | | | SO23-XXVII-3 50.9 |
| 02-011-008 | ELBOW-TO-RPV INLET NOZZLE EXTENSION PIECE WELD | B-J | B9.11 | UT | | | SO23-XXVII-3.50.9 |
| 02-011-011 | SAFETY INJECTION NOZZLE-TO-SAFE END WELD | B-F | B5.130 | UT | PT | | SO23-XXVII-20.55,SO23-XXVII-20 48 |
| 02-011-012 | SPRAY NOZZLE-TO-SAFE END WELD 3" | B-F | B5.140 | | PT | | SO23-XXVII-20.48 |
| 02-012-015 | PIPE LONGITUDINAL WELD (INBOARD) | B-J | B9.12 | UT | MT | | SO23-XXVII-30.5, SO23-XXVII-20.47 |
| 02-012-016 | PIPE LONGITUDINAL WELD (OUTBOARD) | B-J | B9.12 | UT | MT | | SO23-XXVII-30.5, SO23-XXVII-20.47 |
| 02-012-017 | PIPE-TO-SG NOZZLE EXTENSION PIECE WELD | B-J | B9.11 | UT | MT | | SO23-XXVII-30.5, SO23-XXVII-20.47 |
| 02-012-019 | DRAIN NOZZLE-TO-SAFE END WELD 2" | B-F | B5.140 | | PT | | SO23-XXVII-20 48 |
| 02-013-006 RV | ELBOW LONGITUDINAL WELD - RV END | B-J | B9.12 | UT | | | SO23-XXVII-3.50.9 |
| 02-013-007 RV | ELBOW LONGITUDINAL WELD - RV END | B-J | B9.12 | UT | | | SO23-XXVII-3.50.9 |
| 02-013-008 | ELBOW-TO-RPV INLET NOZZLE EXTENSION PIECE WELD | B-J | B9.11 | UT | | | SO23-XXVII-3.50 9 |
| 02-014-012 SG | ELBOW LONGITUDINAL WELD - S/G END | B-J | B9.12 | UT | MT | | SO23-XXVII-30.5, SO23-XXVII-20.47 |
| 02-014-013 SG | ELBOW LONGITUDINAL WELD - S/G END | B-J | B9.12 | UT | MT | | SO23-XXVII-30.5, SO23-XXVII-20.47 |
| 02-014-014 | ELBOW-TO-PIPE WELD | B-J | B9.11 | UT | MT | | SO23-XXVII-30.5, SO23-XXVII-20.47 |

## ISI U2C12 COMPLETED EXAMINATIONS

| | | | | | | | |
|---|---|---|---|---|---|---|---|
| 02-014-015 | PIPE LONGITUDINAL WELD | B-J | B9.12 | UT | MT | | SO23-XXVII-30.5, SO23-XXVII-20.47 |
| 02-014-016 | PIPE LONGITUDINAL WELD | B-J | B9.12 | UT | MT | | SO23-XXVII-30.5, SO23-XXVII-20.47 |
| 02-014-017 | PIPE-TO-STEAM GENERATOR NOZZLE EXTENSION PIECE WELD | B-J | B9.11 | UT | MT | | SO23-XXVII-30 5, SO23-XXVII-20 47 |
| 02-014-019 | DRAIN NOZZLE-TO-SAFE END WELD 2" | B-F | B5.140 | | PT | | SO23-XXVII-20.48 |
| 02-015-006 RV | ELBOW LONGITUDINAL WELD - RV END | B-J | B9.12 | UT | | | SO23-XXVII-3.50.9 |
| 02-015-007 RV | ELBOW LONGITUDINAL WELD - RV END | B-J | B9.12 | UT | | | SO23-XXVII-3.50.9 |
| 02-015-008 | ELBOW-TO-RPV INLET NOZZLE EXTENSION PIECE WELD | B-J | B9.11 | UT | | | SO23-XXVII-3.50.9 |
| 02-016-005 | 12" SCH 160 ELBOW TO PIPE | B-J | B9.11 | UT | PT | | SO23-XXVII-30.6, SO23-XXVII-20.48 |
| 02-016-006 | 12" SCH 160 PIPE-TO-ELBOW | B-J | B9.11 | UT | PT | | SO23-XXVII-30.6, SO23-XXVII-20.48 |
| 02-016-007 | 12" SCH 160 ELBOW-TO-PIPE | B-J | B9.11 | UT | PT | | SO23-XXVII-30 6, SO23-XXVII-20.48 |
| 02-016-020-I | Y-STOP W/INTEGRALLY WELDED LUGS | B-K | B10.20 | | PT | | SO23-XXVII-20.48 |
| 02-017-018 | 12" SCH 160 ELBOW-TO-REDUCER TEE | B-J | B9.11 | UT | PT | | SO23-XXVII-30.6, SO23-XXVII-20.48 |
| 02-017-019 | 12" SCH 160 REDUCER TEE-TO-PIPE | B-J | B9.11 | UT | PT | | SO23-XXVII-30.6, SO23-XXVII-20 48 |
| 02-017-048 | SIDE PLATE BOLTING (STUDS & NUTS) (DRAWING NO. SO23-408-1-6-216) | BG2 | B7.70 | | | VT-1 | SO23-XXVII-20.49 |
| 02-018-016 | 12" SCH 160 PIPE-TO-REDUCER TEE | B-J | B9.11 | UT | PT | | SO23-XXVII-30.6, SO23-XXVII-20.48 |
| 02-018-017 | 12" SCH 160 REDUCER TEE-TO-PIPE | B-J | B9.11 | UT | PT | | SO23-XXVII-30.6, SO23-XXVII-20.48 |
| 02-018-034 | SIDE PLATE BOLTING (2 PLACES) (DRAWING NO. SO23-408-1-6-46) | BG2 | B7.70 | | | VT-1 | SO23-XXVII-20.49 |
| 02-018-046 | 8" SCH 140 PIPE-TO-REDUCING TEE | B-J | B9.11 | UT | PT | | SO23-XXVII-30.6, SO23-XXVII-20 48 |
| 02-018-047 | 8" SCH 140 REDUCING TEE-TO-PIPE | B-J | B9.11 | UT | PT | | SO23-XXVII-30.6, SO23-XXVII-20 48 |
| 02-019-010 | VALVE BODY LOWER SECTION WELD (DRAWING NO. SO23-507-5-1-22) | BM1 | B12.40 | | PT | | SO23-XXVII-20.48 |
| 02-019-010A | VALVE BODY UPPER SECTION WELD (DRAWING NO. SO23-507-5-1-22) | BM1 | B12.40 | | PT | | SO23-XXVII-20.48 |
| 02-019-040 | 12" SCH 160 PIPE-TO-NOZZLE | B-J | B9.11 | UT | PT | | SO23-XXVII-30.6, SO23-XXVII-20.48 |
| 02-019-043 | 8" SCH 140 ELBOW-TO-PIPE | B-J | B9.11 | UT | PT | | SO23-XXVII-30.6, SO23-XXVII-20.48 |
| 02-020-090-F | STRUT (FORMERLY 02-020-091) | F-A | F1.10A | | | VT-3 | SO23-XXVII-20 51 |
| 02-020-092-F | Y-STOP | F-A | F1.10A | | | VT-3 | SO23-XXVII-20.51 |
| 02-020-092-I | Y-STOP W/INTEGRALLY WELDED RESTRAINT LUGS | B-K | B10.20 | | PT | | SO23-XXVII-20.48 |
| 02-021-001 | 16" SCH 160 NOZZLE-TO-ELBOW | B-J | B9.11 | UT | PT | | SO23-XXVII-30.6, SO23-XXVII-20.48 |
| 02-021-034 | 16" STOP VALVE UPPER BODY WELD (DRAWING NO. SO23-507-5-1-37) | BM1 | B12.40 | | PT | | SO23-XXVII-20 48 |
| 02-021-035 | 16" STOP VALVE LOWER BODY WELD (DRAWING NO. SO23-507-5-1-37) | BM1 | B12.40 | | PT | | SO23-XXVII-20.48 |
| 02-021-038 | 10" SCH 140 REDUCER TEE-TO-PIPE | B-J | B9.11 | UT | PT | | SO23-XXVII-30.6, SO23-XXVII-20.48 |
| 02-021-054B | 10" STOP VALVE LOWER BODY WELD (DRAWING NO. SO23-507-5-1-142) | BM1 | B12 40 | | PT | | SO23-XXVII-20.48 |
| 02-021-054E | 10" STOP VALVE UPPER BODY WELD (DRAWING NO. SO23-507-5-1-142) | BM1 | B12.40 | | PT | | SO23-XXVII-20.48 |
| 02-021-055 | 3" SCH 160 PIPE-TO-10" SCH 160 PIPE | B-J | B9 32 | | PT | | SO23-XXVII-20.48 |
| 02-021-056 | 3" SCH 160 PIPE-TO-VALVE | B-J | B9.21 | | PT | | SO23-XXVII-20.48 |
| 02-022-130 | 3" SCH 160 PIPE-TO-ELBOW | B-J | B9.21 | | PT | | SO23-XXVII-20.48 |
| 02-022-140 | 3" SCH 160 ELBOW-TO-PIPE | B-J | B9.21 | | PT | | SO23-XXVII-20.48 |
| 02-023-026 | SNUBBER | F-A | F1.10C | | | VT-3 | SO23-XXVII-20 51 |
| 02-023-110 | 3" SCH 160 PIPE-TO-ELBOW | B-J | B9.21 | | PT | | SO23-XXVII-20.48 |
| 02-023-120 | 3" SCH 160 ELBOW-TO-PIPE | B-J | B9 21 | | PT | | SO23-XXVII-20.48 |
| 02-023-130 | 3" SCH 160 PIPE-TO-ELBOW | B-J | B9.21 | | PT | | SO23-XXVII-20.48 |
| 02-023-140 | 3" SCH 160 ELBOW-TO-PIPE | B-J | B9 21 | | PT | | SO23-XXVII-20.48 |
| 02-023-170 | 4" SCH 120 PIPE-TO-ELBOW | B-J | B9.11 | UT | PT | | SO23-XXVII-30.6, SO23-XXVII-20.48 |
| 02-023-180 | 4" SCH 120 ELBOW-TO-PIPE | B-J | B9.11 | UT | PT | | SO23-XXVII-30.6, SO23-XXVII-20.48 |
| 02-023-340 | 4" SCH 120 ELBOW-TO-PIPE | B-J | B9.11 | UT | PT | | SO23-XXVII-30.6, SO23-XXVII-20.48 |
| 02-023-360 | 4" SCH 120 TEE-TO-PIPE | B-J | B9.11 | UT | PT | | SO23-XXVII-30.6, SO23-XXVII-20.48 |
| 02-025-018 | 6" SCH 160 NOZZLE-TO-ELBOW | B-J | B9.11 | UT | PT | | SO23-XXVII-30.6, SO23-XXVII-20.48 |

## ISI U2C12 COMPLETED EXAMINATIONS

| | | | | | | | |
|---|---|---|---|---|---|---|---|
| 02-026-028 | 2" SCH 160 TEE-TO-PIPE | B-J | B9 21 | | PT | | SO23-XXVII-20.48 |
| 02-026-028P | 2" SCH 160 TEE-TO-PIPE | B-J | B9 21 | | PT | | SO23-XXVII-20.48 |
| 02-026-072 | VERTICAL SUPPORT | F-A | F1.10A | | | VT-3 | SO23-XXVII-20.51 |
| 02-026-190 | 2" SCH 160 PIPE-TO-TEE | B-J | B9.21 | | PT | | SO23-XXVII-20.48 |
| 02-026-200 | 2" SCH 160 TEE-TO-PIPE | B-J | B9.21 | | PT | | SO23-XXVII-20.48 |
| 02-026-280 | 2" SCH 160 PIPE-TO-ELBOW (ADDED BY DCN #1 TO S21201ML060 REV 11) | B-J | B9.21 | | PT | | SO23-XXVII-20.48 |
| 02-026-290 | 2" SCH 160 ELBOW-TO-PIPE | B-J | B9.21 | | PT | | SO23-XXVII-20.48 |
| 02-026-300 | 2" SCH 160 PIPE-TO-VALVE | B-J | B9 21 | | PT | | SO23-XXVII-20 48 |
| 02-027-001 | 2" SCH 160 NOZZLE-TO-PIPE | B-J | B9 21 | | PT | | SO23-XXVII-20 48 |
| 02-027-008 | 2" SCH 160 PIPE-TO-VALVE | B-J | B9.21 | | PT | | SO23-XXVII-20 48 |
| 02-027-011 | GUIDE & Y-STOP | F-A | F1.10B | | | VT-3 | SO23-XXVII-20.51 |
| 02-027-014-F | Y-STOP | F-A | F1.10A | | | VT-3 | SO23-XXVII-20.51 |
| 02-027-021 | VARIABLE SPRINGS | F-A | F1.10C | | | VT-3 | SO23-XXVII-20 51 |
| 02-028-023 | VERTICAL SUPPORT | F-A | F1.10A | | | VT-3 | SO23-XXVII-20.51 |
| 02-030-001 | 2" SCH 160 NOZZLE-TO-PIPE | B-J | B9.21 | | PT | | SO23-XXVII-20.48 |
| 02-030-002 | 2" SCH 160 PIPE-TO-REDUCER TEE | B-J | B9.21 | | PT | | SO23-XXVII-20.48 |
| 02-030-004 | 2" SCH 160 REDUCER TEE-TO-PIPE | B-J | B9.21 | | PT | | SO23-XXVII-20.48 |
| 02-032-004 | 2" SCH 160 VALVE-TO-PIPE | B-J | B9 21 | | PT | | SO23-XXVII-20.48 |
| 02-032-005 | 2" SCH 160 PIPE-TO-REDUCER TEE | B-J | B9.21 | | PT | | SO23-XXVII-20.48 |
| 02-032-007 | 2" SCH 160 REDUCER TEE-TO-PIPE | B-J | B9.21 | | PT | | SO23-XXVII-20 48 |
| 02-032-017 | 2" SCH 160 PIPE-TO-REDUCER TEE | B-J | B9.21 | | PT | | SO23-XXVII-20 48 |
| 02-032-019 | 2" SCH 160 REDUCER TEE-TO-PIPE | B-J | B9.21 | | PT | | SO23-XXVII-20.48 |
| 02-032-023 | VERTICAL SUPPORT | F-A | F1.10A | | | VT-3 | SO23-XXVII-20.51 |
| 02-033-001 | 2" SCH 160 NOZZLE-TO-PIPE | B-J | B9.21 | | PT | | SO23-XXVII-20.48 |
| 02-035-012 | MOTOR FLYWHEEL (ENTIRE FLYWHEEL) | N/A | | UT | | | SO23-XXVII-20.63 |
| 02-036-001 | SCROLL WELD IN PUMP CASING (CODE CASE N-481 APPLIES) | BL1 | B12.10 | | | VT-1 | SO23-XXVII-20.49 |
| 02-036-002 | SCROLL WELD IN PUMP CASING (CODE CASE N-481 APPLIES) | BL1 | B12.10 | | | VT-1 | SO23-XXVII-20.49 |
| 02-036-003 | PUMP CASING INTERNAL PRESS BNDRY SURF | BL2 | B12.20 | | | VT-3 | SO23-XXVII-20 51 |
| 02-036-012 | MOTOR FLYWHEEL (ENTIRE FLYWHEEL) | N/A | | UT | | | SO23-XXVII-20.63 |
| 02-036-013 | SUPPORT SKIRT UPPER COURSE-TO-PUMP WELD | B-K | B10.30 | | PT | | SO23-XXVII-20.48 |
| 02-036-014 | PUMP CASING HORIZONTAL SUPPORT ASSEMBLY | F-A | F1.40B | | | VT-3 | SO23-XXVII-20 51 |
| 02-036-026 | REACTOR COOLANT PUMP STUD | BG1 | B6.180 | UT | | | SO23-XXVII-30.7 |
| 02-036-027 | REACTOR COOLANT PUMP STUD | BG1 | B6.180 | UT | | | SO23-XXVII-30.7 |
| 02-036-028 | REACTOR COOLANT PUMP STUD | BG1 | B6.180 | UT | | | SO23-XXVII-30 7 |
| 02-036-029 | REACTOR COOLANT PUMP STUD | BG1 | B6.180 | UT | | | SO23-XXVII-30.7 |
| 02-036-030 | REACTOR COOLANT PUMP STUD | BG1 | B6.180 | UT | | | SO23-XXVII-30.7 |
| 02-036-042 | REACTOR COOLANT PUMP NUT | BG1 | B6 200 | | | VT-1 | SO23-XXVII-20.49 |
| 02-036-043 | REACTOR COOLANT PUMP NUT | BG1 | B6 200 | | | VT-1 | SO23-XXVII-20.49 |
| 02-036-044 | REACTOR COOLANT PUMP NUT | BG1 | B6 200 | | | VT-1 | SO23-XXVII-20.49 |
| 02-036-045 | REACTOR COOLANT PUMP NUT | BG1 | B6.200 | | | VT-1 | SO23-XXVII-20.49 |
| 02-036-046 | REACTOR COOLANT PUMP NUT | BG1 | B6.200 | | | VT-1 | SO23-XXVII-20 49 |
| 02-036-063 | STUD HOLE THREAD AND FLANGE LIGAMENT AREA | BG1 | B6.190 | | | VT-1 | SO23-XXVII-20.49 |
| 02-036-064 | STUD HOLE THREAD AND FLANGE LIGAMENT AREA | BG1 | B6.190 | | | VT-1 | SO23-XXVII-20.49 |
| 02-036-065 | STUD HOLE THREAD AND FLANGE LIGAMENT AREA | BG1 | B6.190 | | | VT-1 | SO23-XXVII-20.49 |
| 02-036-066 | STUD HOLE THREAD AND FLANGE LIGAMENT AREA | BG1 | B6.190 | | | VT-1 | SO23-XXVII-20.49 |
| 02-036-067 | STUD HOLE THREAD AND FLANGE LIGAMENT AREA | BG1 | B6.190 | | | VT-1 | SO23-XXVII-20.49 |

## ISI U2C12 COMPLETED EXAMINATIONS

| | | | | | | | |
|---|---|---|---|---|---|---|---|
| 02-036-068 | STUD HOLE THREAD AND FLANGE LIGAMENT AREA | BG1 | B6.190 | | | VT-1 | SO23-XXVII-20.49 |
| 02-036-069 | STUD HOLE THREAD AND FLANGE LIGAMENT AREA | BG1 | B6.190 | | | VT-1 | SO23-XXVII-20.49 |
| 02-036-070 | STUD HOLE THREAD AND FLANGE LIGAMENT AREA | BG1 | B6.190 | | | VT-1 | SO23-XXVII-20.49 |
| 02-036-071 | STUD HOLE THREAD AND FLANGE LIGAMENT AREA | BG1 | B6.190 | | | VT-1 | SO23-XXVII-20.49 |
| 02-036-072 | STUD HOLE THREAD AND FLANGE LIGAMENT AREA | BG1 | B6.190 | | | VT-1 | SO23-XXVII-20.49 |
| 02-036-073 | STUD HOLE THREAD AND FLANGE LIGAMENT AREA | BG1 | B6.190 | | | VT-1 | SO23-XXVII-20.49 |
| 02-036-074 | STUD HOLE THREAD AND FLANGE LIGAMENT AREA | BG1 | B6.190 | | | VT-1 | SO23-XXVII-20.49 |
| 02-036-075 | STUD HOLE THREAD AND FLANGE LIGAMENT AREA | BG1 | B6.190 | | | VT-1 | SO23-XXVII-20.49 |
| 02-036-076 | STUD HOLE THREAD AND FLANGE LIGAMENT AREA | BG1 | B6.190 | | | VT-1 | SO23-XXVII-20.49 |
| 02-036-077 | STUD HOLE THREAD AND FLANGE LIGAMENT AREA | BG1 | B6.190 | | | VT-1 | SO23-XXVII-20.49 |
| 02-036-078 | STUD HOLE THREAD AND FLANGE LIGAMENT AREA | BG1 | B6.190 | | | VT-1 | SO23-XXVII-20.49 |
| 02-036-079 | PUMP CASING HORIZONTAL SUPPORT ASSEMBLY | F-A | F1.40B | | | VT-3 | SO23-XXVII-20 51 |
| 02-036-100 | HEAT EXCHANGER-TO-DRIVER MOUNT NUT (DWG. NO. SO23-922-157) | BG2 | B7.60 | | | VT-1 | SO23-XXVII-20 49 |
| 02-036-101 | HEAT EXCHANGER-TO-DRIVER MOUNT NUT (DWG. NO. SO23-922-157) | BG2 | B7.60 | | | VT-1 | SO23-XXVII-20.49 |
| 02-036-102 | HEAT EXCHANGER-TO-DRIVER MOUNT NUT (DWG. NO. SO23-922-157) | BG2 | B7.60 | | | VT-1 | SO23-XXVII-20.49 |
| 02-036-103 | HEAT EXCHANGER-TO-DRIVER MOUNT NUT (DWG. NO. SO23-922-157) | BG2 | B7.60 | | | VT-1 | SO23-XXVII-20.49 |
| 02-036-104 | HEAT EXCHANGER-TO-DRIVER MOUNT NUT (DWG. NO. SO23-922-157) | BG2 | B7.60 | | | VT-1 | SO23-XXVII-20.49 |
| 02-036-105 | HEAT EXCHANGER-TO-DRIVER MOUNT NUT (DWG. NO. SO23-922-157) | BG2 | B7.60 | | | VT-1 | SO23-XXVII-20.49 |
| 02-036-106 | HEAT EXCHANGER-TO-DRIVER MOUNT NUT (DWG. NO. SO23-922-157) | BG2 | B7.60 | | | VT-1 | SO23-XXVII-20.49 |
| 02-036-107 | HEAT EXCHANGER-TO-DRIVER MOUNT NUT (DWG. NO. SO23-922-157) | BG2 | B7.60 | | | VT-1 | SO23-XXVII-20.49 |
| 02-036-108 | HEAT EXCHANGER-TO-DRIVER MOUNT NUT (DWG. NO. SO23-922-157) | BG2 | B7.60 | | | VT-1 | SO23-XXVII-20 49 |
| 02-036-109 | HEAT EXCHANGER-TO-DRIVER MOUNT NUT (DWG. NO. SO23-922-157) | BG2 | B7.60 | | | VT-1 | SO23-XXVII-20.49 |
| 02-036-110 | HEAT EXCHANGER-TO-DRIVER MOUNT NUT (DWG. NO. SO23-922-157) | BG2 | B7.60 | | | VT-1 | SO23-XXVII-20.49 |
| 02-036-111 | HEAT EXCHANGER-TO-DRIVER MOUNT NUT (DWG. NO. SO23-922-157) | BG2 | B7.60 | | | VT-1 | SO23-XXVII-20.49 |
| 02-036-124 | SEAL HOUSING-TO-FLANGE CAPSCREW (DWG. NO. S023-922-231-6) | BG2 | B7.60 | | | VT-1 | SO23-XXVII-20.49 |
| 02-036-125 | SEAL HOUSING-TO-FLANGE CAPSCREW (DWG. NO. S023-922-231-6) | BG2 | B7.60 | | | VT-1 | SO23-XXVII-20.49 |
| 02-036-126 | SEAL HOUSING-TO-FLANGE CAPSCREW (DWG. NO. S023-922-231-6) | BG2 | B7.60 | | | VT-1 | SO23-XXVII-20.49 |
| 02-036-127 | SEAL HOUSING-TO-FLANGE CAPSCREW (DWG. NO. S023-922-231-6) | BG2 | B7.60 | | | VT-1 | SO23-XXVII-20.49 |
| 02-037-012 | MOTOR FLYWHEEL (ENTIRE FLYWHEEL) | N/A | | UT | | | SO23-XXVII-20.63 |
| 02-038-012 | MOTOR FLYWHEEL (ENTIRE FLYWHEEL) | N/A | | UT | | | SO23-XXVII-20 63, SO23-XXVII-20.67 |
| 02-039-068-F | Y-STOP | F-A | F1.10A | | | VT-3 | SO23-XXVII-20.51 |
| 02-043-001 | SECONDARY EXTENSION RING-TO-TUBE SHEET WELD | C-A | C1.30 | UT | | | SO23-XXVII-20.66 |
| 02-043-002 | SECONDARY EXTENSION RING-TO-LOWER SHELL WELD | C-A | C1.10 | UT | | | SO23-XXVII-20 66 |
| 02-043-003 | INTERMEDIATE SHELL-TO-CONE WELD | C-A | C1.10 | UT | | | SO23-XXVII-20.66 |
| 02-043-004 | CONE-TO-UPPER WELD | C-A | C1.10 | UT | | | SO23-XXVII-20.66 |
| 02-043-005 | TOP HEAD-TO-UPPER SHELL WELD | C-A | C1.20 | UT | | | SO23-XXVII-20.66 |
| 02-043-006 | DOME-TO-TORUS WELD | C-A | C1.20 | UT | | | SO23-XXVII-20.66 |
| 02-043-007-R | STEAM NOZZLE INSIDE RADIUS SECTION | C-B | C2.22 | UT | | | SO23-XXVII-20.52 |
| 02-043-007-W | STEAM NOZZLE-TO-HEAD WELD | C-B | C2.21 | UT | MT | | SO23-XXVII-20.66, SO23-XXVII-20.47 |
| 02-043-008-R | FEEDWATER NOZZLE INSIDE RADIUS SECTION | C-B | C2.22 | UT | | | SO23-XXVII-20.52 |
| 02-043-008-W | FEEDWATER NOZZLE-TO-SHELL WELD | C-B | C2.21 | UT | MT | | SO23-XXVII-20.66, SO23-XXVII-20.47 |
| 02-043-009 | STAY CYLINDER DOME-TO-TUBE SHEET WELD | C-A | C1.30 | UT | | | SO23-XXVII-20 66 |
| 02-043-044-F | SUPPORT AT 0 DEG. | F-A | F1.40A | | | VT-3 | SO23-XXVII-20.51 |
| 02-043-044-I | SUPPORT KEY WELD AT 0 DEG. | C-C | C3.10 | | MT | | SO23-XXVII-20.47 |
| 02-043-045-F | SUPPORT AT 180 DEG. | F-A | F1.40A | | | VT-3 | SO23-XXVII-20.51 |
| 02-043-046-F | SNUBBER AT 90 DEG. | F-A | F1.40C | | | VT-3 | SO23-XXVII-20.51 |

## ISI U2C12 COMPLETED EXAMINATIONS

| | | | | | | | |
|---|---|---|---|---|---|---|---|
| 02-043-047-F | SNUBBER AT 270 DEG. | F-A | F1.40C | | | VT-3 | SO23-XXVII-20.51 |
| 02-044-035 | 20" SCH 100 PENETRATION-TO-PIPE | CF2 | C5.51 | UT | | | SO23-XXVII-30.5 |
| 02-044-037 | 20" SCH 100 PIPE-TO-VALVE | CF2 | C5.51 | UT | | | SO23-XXVII-30.5 |
| 02-044-038A | 20" STOP VALVE BODY UPPER WELD (DRAWING NO. SO23-507-6-1-59) | C-G | C6.20 | | MT | | SO23-XXVII-20.47 |
| 02-044-038B | 20" STOP VALVE BODY LOWER WELD (DRAWING NO. SO23-507-6-1-59) | C-G | C6.20 | | MT | | SO23-XXVII-20.47 |
| 02-044-040 | VARIABLE SPRING | F-A | F1.20C | | | VT-3 | SO23-XXVII-20.51 |
| 02-044-048-F | Y-STOP | F-A | F1.20A | | | VT-3 | SO23-XXVII-20.51 |
| 02-046-047 | 6" SCH 120 PIPE-TO-TEE | CF2 | C5.51 | UT | MT | | SO23-XXVII-30.5, SO23-XXVII-20.47 |
| 02-046-048 | 6" SCH 120 TEE-TO-PIPE | CF2 | C5.51 | UT | MT | | SO23-XXVII-30.5, SO23-XXVII-20.47 |
| 02-046-050 | 6" SCH 120 TEE-TO-PIPE | CF2 | C5.51 | UT | MT | | SO23-XXVII-30.5, SO23-XXVII-20.47 |
| 02-046-051 | 6" SCH 120 PIPE-TO-ELBOW | CF2 | C5.51 | UT | MT | | SO23-XXVII-30 5, SO23-XXVII-20.47 |
| 02-046-052 | 6" SCH 120 ELBOW-TO-PIPE | CF2 | C5 51 | UT | | | SO23-XXVII-30.5 |
| 02-046-053 | 6" SCH 120 PIPE-TO-ELBOW | CF2 | C5.51 | UT | | | SO23-XXVII-30.5 |
| 02-046-054 | 6" SCH 120 ELBOW-TO-PIPE | CF2 | C5.51 | UT | | | SO23-XXVII-30.5 |
| 02-046-054A | 6" SCH 120 PIPE-TO-PIPE | CF2 | C5 51 | UT | | | SO23-XXVII-30.5 |
| 02-046-055 | 6" SCH 120 PIPE-TO-ELBOW | CF2 | C5 51 | UT | | | SO23-XXVII-30.5 |
| 02-046-056 | 6" SCH 120 ELBOW-TO-PIPE | CF2 | C5 51 | UT | | | SO23-XXVII-30.5 |
| 02-046-057 | 6" SCH 120 PIPE-TO-VALVE | CF2 | C5.51 | UT | | | SO23-XXVII-30.5 |
| 02-046-061 | VARIABLE SPRING | F-A | F1.20C | | | VT-3 | SO23-XXVII-20.51 |
| 02-046-064-F | Y-STOP | F-A | F1.20A | | | VT-3 | SO23-XXVII-20.51 |
| 02-048-041 | 6" SCH 80 PIPE-TO-ELBOW | CF2 | C5.51 | UT | | | SO23-XXVII-30.5 |
| 02-048-042 | 6" SCH 80 ELBOW-TO-ELBOW | CF2 | C5 51 | UT | | | SO23-XXVII-30 5 |
| 02-048-043 | 6" SCH 80 ELBOW-TO-PIPE | CF2 | C5.51 | UT | | | SO23-XXVII-30.5 |
| 02-048-044 | 6" SCH 80 PIPE-TO-ELBOW | CF2 | C5.51 | UT | | | SO23-XXVII-30.5 |
| 02-048-045 | 6" SCH 80 ELBOW-TO-PIPE | CF2 | C5.51 | UT | MT | | SO23-XXVII-30.5, SO23-XXVII-20 47 |
| 02-048-046 | 6" SCH 80 PIPE-TO-ELBOW | CF2 | C5.51 | UT | MT | | SO23-XXVII-30.5, SO23-XXVII-20.47 |
| 02-048-047 | 6" SCH 80 ELBOW-TO-PIPE | CF2 | C5.51 | UT | MT | | SO23-XXVII-30.5, SO23-XXVII-20.47 |
| 02-048-047A | 6" SCH 80 PIPE-TO-PIPE | CF2 | C5 51 | UT | | | SO23-XXVII-30 5 |
| 02-048-048 | 6" SCH 80 PIPE-TO-VALVE 2HV4053 (VALVE SUPPLIED W/SAFE END) | CF2 | C5.51 | UT | MT | | SO23-XXVII-30 5, SO23-XXVII-20 47 |
| 02-048-062-F | SNUBBER | F-A | F1.20C | | | VT-3 | SO23-XXVII-20.51 |
| 02-049-026-F | Y-STOP | F-A | F1.20A | | | VT-3 | SO23-XXVII-20.51 |
| 02-049-034-F | GUIDE | F-A | F1.20A | | | VT-3 | SO23-XXVII-20.51 |
| 02-049-034-I | GUIDE W/INTEGRALLY WELDED ATTACHMENT | C-C | C3 20 | | MT | | SO23-XXVII-20.47 |
| 02-049-036-F | GUIDE | F-A | F1.20A | | | VT-3 | SO23-XXVII-20.51 |
| 02-049-036-I | GUIDE W/INTEGRALLY WELDED LUGS | C-C | C3 20 | | MT | | SO23-XXVII-20 47 |
| 02-049-043-F | AXIAL STOP | F-A | F1.20A | | | VT-3 | SO23-XXVII-20.51 |
| 02-049-043-I | AXIAL STOP W/INTEGRALLY WELDED LUGS | C-C | C3.20 | | MT | | SO23-XXVII-20.47 |
| 02-051-033A-SG | 40" PIPE LONGITUDINAL WELD | CF2 | C5.52 | UT | MT | | SO23-XXVII-30.5, SO23-XXVII-20.47 |
| 02-051-035 | 40" PIPE-TO-PENETRATION NO. 33 | CF2 | C5.51 | UT | MT | | SO23-XXVII-30.5, SO23-XXVII-20.47 |
| 02-052-004 | REDUCING TEE-TO-34" ELBOW | CF2 | C5.51 | UT | | | SO23-XXVII-30.5 |
| 02-052-005A-SG | LONGITUDINAL - ELBOW OUTER RADIUS | CF2 | C5.52 | UT | MT | | SO23-XXVII-30.5, SO23-XXVII-20.47 |
| 02-052-005A-SV | LONGITUDINAL - ELBOW OUTER RADIUS | CF2 | C5.52 | UT | | | SO23-XXVII-30.5 |
| 02-052-005B-SG | LONGITUDINAL - ELBOW INNER RADIUS | CF2 | C5.52 | UT | MT | | SO23-XXVII-30.5, SO23-XXVII-20.47 |
| 02-052-005B-SV | LONGITUDINAL - ELBOW INNER RADIUS | CF2 | C5.52 | UT | | | SO23-XXVII-30.5 |
| 02-052-006 | 34" ELBOW-TO-PIPE | CF2 | C5.51 | UT | MT | | SO23-XXVII-30.5, SO23-XXVII-20.47 |
| 02-052-007 | 8" SCH 80 PIPE-TO-HEADER EXTRUSION | CF2 | C5.51 | UT | | | SO23-XXVII-30.5 |

## ISI U2C12 COMPLETED EXAMINATIONS

| | | | | | | | |
|---|---|---|---|---|---|---|---|
| 02-052-008 | 8" SCH 80 PIPE-TO-ELBOW | CF2 | C5.51 | UT | | | SO23-XXVII-30.5 |
| 02-052-009 | 8" SCH 80 ELBOW-TO-ELBOW | CF2 | C5.51 | UT | | | SO23-XXVII-30.5 |
| 02-052-010 | 8" SCH 80 ELBOW-TO-PIPE | CF2 | C5.51 | UT | | | SO23-XXVII-30.5 |
| 02-052-011 | 8" SCH 80 PIPE-TO-VALVE | CF2 | C5.51 | UT | | | SO23-XXVII-30.5 |
| 02-052-028A-SV | LONGITUDINAL WELD - HEADER SEAM | CF2 | C5.52 | UT | MT | | SO23-XXVII-30.5, SO23-XXVII-20.47 |
| 02-052-063 | REDUCING TEE-TO-VALVE | CF2 | C5 51 | UT | | | SO23-XXVII-30.5 |
| 02-052-109-F | Y-STOP | F-A | F1.20A | | | VT-3 | SO23-XXVII-20.51 |
| 02-052-110-F | SNUBBER | F-A | F1.20C | | | VT-3 | SO23-XXVII-20.51 |
| 02-053-001 | PENETRATION NO. 33-TO-40" REDUCING TEE | CF2 | C5.51 | UT | | | SO23-XXVII-30.5 |
| 02-053-014 | 8" SCH 80 PIPE-TO-ELBOW | CF2 | C5 51 | UT | | | SO23-XXVII-30 5 |
| 02-053-015 | 8" SCH 80 ELBOW-TO-PIPE | CF2 | C5.51 | UT | | | SO23-XXVII-30.5 |
| 02-053-016 | 8" SCH 80 PIPE-TO-ELBOW | CF2 | C5.51 | UT | | | SO23-XXVII-30.5 |
| 02-053-017 | 8" SCH 80 ELBOW-TO-PIPE | CF2 | C5.51 | UT | | | SO23-XXVII-30.5 |
| 02-053-019 | 8" SCH 80 ELBOW-TO-PIPE | CF2 | C5 51 | UT | | | SO23-XXVII-30.5 |
| 02-053-020 | 8" SCH 80 PIPE-TO-ELBOW | CF2 | C5.51 | UT | | | SO23-XXVII-30.5 |
| 02-053-021 | 8" SCH 80 ELBOW-TO-PIPE | CF2 | C5.51 | UT | | | SO23-XXVII-30.5 |
| 02-053-022 | 8" SCH 80 PIPE-TO-ELBOW | CF2 | C5.51 | UT | | | SO23-XXVII-30.5 |
| 02-053-023 | 8" SCH 80 ELBOW-TO-PIPE | CF2 | C5.51 | UT | | | SO23-XXVII-30.5 |
| 02-053-024 | 8" SCH 80 PIPE-TO-ELBOW | CF2 | C5.51 | UT | | | SO23-XXVII-30 5 |
| 02-053-025 | 8" SCH 80 ELBOW-TO-PIPE | CF2 | C5.51 | UT | | | SO23-XXVII-30.5 |
| 02-053-026 | 8" SCH 80 PIPE-TO-VALVE | CF2 | C5.51 | UT | MT | | SO23-XXVII-30.5, SO23-XXVII-20 47 |
| 02-053-048A-SG | 40"X40"X34" REDUCING TEE BODY WELD - LONG SEAM | CF2 | C5 52 | UT | | | SO23-XXVII-30.5 |
| 02-053-048A-TB | 40"X40"X34" REDUCING TEE BODY WELD - LONG SEAM | CF2 | C5.52 | UT | | | SO23-XXVII-30.5 |
| 02-053-048B-SG | 40"X40"X34" REDUCING TEE BODY WELD - SHORT SEAM | CF2 | C5.52 | UT | | | SO23-XXVII-30 5 |
| 02-053-048B-SV | 40"X40"X34" REDUCING TEE BODY WELD - SHORT SEAM | CF2 | C5.52 | UT | | | SO23-XXVII-30.5 |
| 02-053-048C-SV | 40"X40"X34" REDUCING TEE BODY WELD - SHORT SEAM | CF2 | C5.52 | UT | | | SO23-XXVII-30.5 |
| 02-053-048C-TB | 40"X40"X34" REDUCING TEE BODY WELD - SHORT SEAM | CF2 | C5.52 | UT | | | SO23-XXVII-30.5 |
| 02-053-050 | 40" REDUCING TEE-TO-40" REDUCING TEE | CF2 | C5.51 | UT | | | SO23-XXVII-30.5 |
| 02-053-051A-SG | 40"X40"X26" REDUCING TEE BODY WELD - LONG SEAM | CF2 | C5.52 | UT | | | SO23-XXVII-30.5 |
| 02-053-051A-TB | 40"X40"X26" REDUCING TEE BODY WELD - LONG SEAM | CF2 | C5.52 | UT | | | SO23-XXVII-30.5 |
| 02-053-051B-SG | 40"X40"X26" REDUCING TEE BODY WELD - SHORT SEAM | CF2 | C5.52 | UT | | | SO23-XXVII-30.5 |
| 02-053-051B-SV | 40"X40"X26" REDUCING TEE BODY WELD - SHORT SEAM | CF2 | C5.52 | UT | | | SO23-XXVII-30.5 |
| 02-053-051C-SV | 40"X40"X26" REDUCING TEE BODY WELD - SHORT SEAM | CF2 | C5.52 | UT | | | SO23-XXVII-30.5 |
| 02-053-051C-TB | 40"X40"X26" REDUCING TEE BODY WELD - SHORT SEAM | CF2 | C5.52 | UT | | | SO23-XXVII-30 5 |
| 02-053-054A-SG | 26" ELBOW BODY WELD - INSIDE RADIUS | CF2 | C5.52 | UT | | | SO23-XXVII-30.5 |
| 02-053-054A-SV | 26" ELBOW BODY WELD - INSIDE RADIUS | CF2 | C5 52 | UT | | | SO23-XXVII-30.5 |
| 02-053-054B-SG | 26" ELBOW BODY WELD - OUTSIDE RADIUS | CF2 | C5 52 | UT | | | SO23-XXVII-30.5 |
| 02-053-054B-SV | 26" ELBOW BODY WELD - OUTSIDE RADIUS | CF2 | C5.52 | UT | | | SO23-XXVII-30.5 |
| 02-053-059A-SG | LONGITUDINAL WELD - HEADER SEAM | CF2 | C5.52 | UT | | | SO23-XXVII-30.5 |
| 02-053-059A-SV | LONGITUDINAL WELD - HEADER SEAM | CF2 | C5.52 | UT | | | SO23-XXVII-30 5 |
| 02-053-070 | 40" REDUCING TEE-TO-VALVE 2HV8205 | CF2 | C5.51 | UT | | | SO23-XXVII-30.5 |
| 02-053-119-F | SNUBBER | F-A | F1.20C | | | VT-3 | SO23-XXVII-20 51 |
| 02-053-119-I | SNUBBER W/INTEGRALLY WELDED ATTACHMENT | C-C | C3.20 | | MT | | SO23-XXVII-20.47 |
| 02-053-120-F | Y-STOP | F-A | F1.20A | | | VT-3 | SO23-XXVII-20 51 |
| 02-053-120-I | Y-STOP W/INTEGRALLY WELDED ATTACHMENT | C-C | C3 20 | | MT | | SO23-XXVII-20.47 |
| 02-061-194-F | GUIDE & Y-STOP | F-A | F1.20B | | | VT-3 | SO23-XXVII-20.51 |

## ISI U2C12 COMPLETED EXAMINATIONS

| | | | | | | | |
|---|---|---|---|---|---|---|---|
| 02-061-198-F | SNUBBER | F-A | F1.20C | | | VT-3 | SO23-XXVII-20.51 |
| 02-061-198-I | SNUBBER W/INTEGRALLY WELDED ATTACHMENT | C-C | C3.20 | | PT | | SO23-XXVII-20 48 |
| 02-061-199-F | SNUBBER | F-A | F1.20C | | | VT-3 | SO23-XXVII-20.51 |
| 02-061-199-I | SNUBBER W/INTEGRALLY WELDED ATTACHMENT | C-C | C3.20 | | PT | | SO23-XXVII-20 48 |
| 02-061-204-F | AXIAL STOP | F-A | F1.20A | | | VT-3 | SO23-XXVII-20.51 |
| 02-061-205-F | SWAY STRUT | F-A | F1 20A | | | VT-3 | SO23-XXVII-20.51 |
| 02-061-209-F | SWAY STRUT | F-A | F1.20A | | | VT-3 | SO23-XXVII-20.51 |
| 02-061-212-F | SWAY STRUT | F-A | F1.20A | | | VT-3 | SO23-XXVII-20.51 |
| 02-061-215-F | SWAY STRUT | F-A | F1 20A | | | VT-3 | SO23-XXVII-20.51 |
| 02-061-215-I | SWAY STRUT W/INTEG WELDED ATTACH (SNUBBER REPL DCP 2-6683.2BP) | C-C | C3 20 | | PT | | SO23-XXVII-20.48 |
| 02-061-216-F | SWAY STRUTS | F-A | F1.20A | | | VT-3 | SO23-XXVII-20.51 |
| 02-061-221 | GUIDE | F-A | F1.20B | | | VT-3 | SO23-XXVII-20.51 |
| 02-061-222-F | 5-WAY STOP (FRAMED W/S2-RC-017-H-088) | F-A | F1.20B | | | VT-3 | SO23-XXVII-20 51 |
| 02-061-238 | SNUBBERS FOR VALVE 2HV9336 | F-A | F1.40C | | | VT-3 | SO23-XXVII-20.51 |
| 02-061-239 | SNUBBERS FOR VALVE 2HV9336 | F-A | F1.40C | | | VT-3 | SO23-XXVII-20.51 |
| 02-062-038-F | VERTICAL SUPPORT W/INTEGRALLY WELDED LUGS | F-A | F1.20A | | | VT-3 | SO23-XXVII-20.51 |
| 02-062-039-F | RIGID STRUT (SNUBBER REPLACED DCP 2-6683.2BP) | F-A | F1.20A | | | VT-3 | SO23-XXVII-20.51 |
| 02-063-850-F | VARIABLE SPRINGS | F-A | F1.20C | | | VT-3 | SO23-XXVII-20.51 |
| 02-063-850-I | VARIABLE SPRINGS W/INTEGRALLY WELDED LUGS | C-C | C3.20 | | PT | | SO23-XXVII-20.48 |
| 02-063-860-F | RIGID STRUT (SNUBBER REPL DCP 2-6683.2BP) | F-A | F1.20A | | | VT-3 | SO23-XXVII-20.51 |
| 02-063-860-I | RIGID STRUT W/INTEG WELDED ATTACH (SNUBBER REPL DCP 2-6683.2BP) | C-C | C3.20 | | PT | | SO23-XXVII-20.48 |
| 02-064-1200-F | VARIABLE SPRING | F-A | F1.20C | | | VT-3 | SO23-XXVII-20.51 |
| 02-064-1200-I | VARIABLE SPRING W/INTEGRALLY WELDED ATTACHMENT | C-C | C3.20 | | PT | | SO23-XXVII-20 48 |
| 02-064-1220-F | 3-WAY STOP | F-A | F1.20B | | | VT-3 | SO23-XXVII-20.51 |
| 02-064-510 | 10" SCH 10S STUB-IN PIPE-TO-PIPE | CF1 | C5.41 | | PT | | SO23-XXVII-20 48 |
| 02-066-076-F | VARIABLE SPRING | F-A | F1.20C | | | VT-3 | SO23-XXVII-20 51 |
| 02-066-081-F | AXIAL STOP & Y-STOP | F-A | F1.20B | | | VT-3 | SO23-XXVII-20.51 |
| 02-066-084-F | SWAY STRUT (SNUBBER REPLACED DCP 2-6683.2BP) | F-A | F1.20A | | | VT-3 | SO23-XXVII-20.51 |
| 02-066-084-I | SWAY STRUT W/INTEG WELDED ATTACH (SNUBBER REPL DCP 2-6683.2BP) | C-C | C3.20 | | PT | | SO23-XXVII-20.48 |
| 02-066-085-F | GUIDE & Y-STOP | F-A | F1.20B | | | VT-3 | SO23-XXVII-20.51 |
| 02-068-060 | 4" X 4" X 4" TEE-TO-REDUCER | CF1 | C5.21 | UT | PT | | SO23-XXVII-30.6, SO23-XXVII-20.48 |
| 02-068-160 | 4" ELBOW-TO-4" SCH 80S PIPE | CF1 | C5.21 | UT | PT | | SO23-XXVII-30.6, SO23-XXVII-20.48 |
| 02-068-190 | 4" X 4" X 4" TEE-TO-4" SCH 80S PIPE | CF1 | C5 21 | UT | PT | | SO23-XXVII-30.6, SO23-XXVII-20.48 |
| 02-068-220 | 4" SCH 80S PIPE-TO-4" ELBOW | CF1 | C5.21 | UT | PT | | SO23-XXVII-30.6, SO23-XXVII-20.48 |
| 02-068-650 | 4" SCH 80S PIPE-TO-4" X 4" X 4" TEE | CF1 | C5.21 | UT | PT | | SO23-XXVII-30.6, SO23-XXVII-20.48 |
| 02-068-690 | 4" SCH 80S PIPE-TO-4" ELBOW | CF1 | C5.21 | UT | PT | | SO23-XXVII-30.6, SO23-XXVII-20.48 |
| 02-068-720 | 4" ELBOW-TO-4" SCH 80S PIPE | CF1 | C5.21 | UT | PT | | SO23-XXVII-30.6, SO23-XXVII-20.48 |
| 02-068-800 | 4" SCH 80S PIPE-TO-4" ELBOW | CF1 | C5 21 | UT | PT | | SO23-XXVII-30.6, SO23-XXVII-20 48 |
| 02-069-1040 | 3" SCH 160 PIPE-TO-PENETRATION 41 | CF1 | C5.21 | UT | PT | | SO23-XXVII-30.6, SO23-XXVII-20.48 |
| 02-069-1690 | 3" SCH 160 PIPE-TO-3" ELBOW | CF1 | C5.21 | UT | PT | | SO23-XXVII-30.6, SO23-XXVII-20.48 |
| 02-069-1811 | 2" SCH 160 PIPE-TO-2" ELBOW | CF1 | C5.21 | UT | PT | | SO23-XXVII-30.6, SO23-XXVII-20.48 |
| 02-069-1812 | 2" ELBOW-TO-2" SCH 160 PIPE | CF1 | C5 21 | UT | PT | | SO23-XXVII-30.6, SO23-XXVII-20.48 |
| 02-069-1910 | PENETRATION 39-TO 3" SCH 160 PIPE | CF1 | C5.21 | UT | PT | | SO23-XXVII-30.6, SO23-XXVII-20.48 |
| 02-069-1930 | 3" ELBOW-TO-3" SCH 160 PIPE | CF1 | C5 21 | UT | PT | | SO23-XXVII-30 6, SO23-XXVII-20.48 |
| 02-069-2020 | 3" ELBOW-TO-3" SCH 160 PIPE | CF1 | C5.21 | UT | PT | | SO23-XXVII-30.6, SO23-XXVII-20.48 |
| 02-069-2140 | 2" SCH 80S PIPE-TO-2" ELBOW | CF1 | C5 21 | UT | PT | | SO23-XXVII-30 6, SO23-XXVII-20 48 |

## ISI U2C12 COMPLETED EXAMINATIONS

| | | | | | | | |
|---|---|---|---|---|---|---|---|
| 02-069-2150 | 2" ELBOW-TO-2" SCH 80S PIPE | CF1 | C5 21 | UT | PT | | SO23-XXVII-30 6, SO23-XXVII-20.48 |
| 02-069-2160 | 2" SCH 80S PIPE-TO-2" ELBOW | CF1 | C5 21 | UT | PT | | SO23-XXVII-30.6, SO23-XXVII-20.48 |
| 02-069-2200 | 2" SCH 80S PIPE-TO-2" ELBOW | CF1 | C5.21 | UT | PT | | SO23-XXVII-30.6, SO23-XXVII-20.48 |
| 02-069-2210 | 2" ELBOW-TO-2" SCH 80S PIPE | CF1 | C5.21 | UT | PT | | SO23-XXVII-30.6, SO23-XXVII-20 48 |
| 02-069-2410 | 2" X 3" REDUCER-TO-3" X 3" X 2" REDUCING TEE | CF1 | C5.21 | UT | PT | | SO23-XXVII-30 6, SO23-XXVII-20.48 |
| 02-069-2450 | 3" SCH 160 PIPE-TO-3" ELBOW | CF1 | C5.21 | UT | PT | | SO23-XXVII-30.6, SO23-XXVII-20.48 |
| 02-069-470 | 4" SCH 80S PIPE-TO-4" ELBOW | CF1 | C5.21 | UT | PT | | SO23-XXVII-30.6, SO23-XXVII-20.48 |
| 02-069-490 | 4" SCH 80S PIPE-TO-4" SCH 80S PIPE | CF1 | C5.21 | UT | PT | | SO23-XXVII-30.6, SO23-XXVII-20 48 |
| 02-069-730 | 2" SCH 80S PIPE-TO-2" ELBOW | CF1 | C5.21 | UT | PT | | SO23-XXVII-30.6, SO23-XXVII-20 48 |
| 02-069-740 | 2" ELBOW-TO-2" SCH 80S PIPE | CF1 | C5 21 | UT | PT | | SO23-XXVII-30.6, SO23-XXVII-20 48 |
| 02-069-750 | 2" SCH 80S PIPE-TO-2" ELBOW | CF1 | C5.21 | UT | PT | | SO23-XXVII-30.6, SO23-XXVII-20.48 |
| 02-069-760 | 2" ELBOW-TO-2" SCH 80S PIPE | CF1 | C5.21 | UT | PT | | SO23-XXVII-30.6, SO23-XXVII-20.48 |
| 02-069-770 | 2" SCH 80S PIPE-TO-2" SCH 80S PIPE | CF1 | C5.21 | UT | PT | | SO23-XXVII-30.6, SO23-XXVII-20.48 |
| 02-070-030 | 4" ELBOW-TO- 4" SCH 80S PIPE | CF1 | C5.21 | UT | PT | | SO23-XXVII-30.6, SO23-XXVII-20.48 |
| 02-070-060 | 4" SCH 80S PIPE-TO-4" ELBOW | CF1 | C5 21 | UT | PT | | SO23-XXVII-30.6, SO23-XXVII-20.48 |
| 02-070-1010 | 2" SCH 160 PIPE-TO-2" ELBOW | CF1 | C5.21 | UT | PT | | SO23-XXVII-30.6, SO23-XXVII-20.48 |
| 02-070-1020 | 2" ELBOW-TO-2" SCH 160 PIPE | CF1 | C5.21 | UT | PT | | SO23-XXVII-30.6, SO23-XXVII-20 48 |
| 02-070-1030 | 2" SCH 160 PIPE-TO-ELBOW | CF1 | C5.21 | UT | PT | | SO23-XXVII-30 6, SO23-XXVII-20.48 |
| 02-070-1070 | 2" SCH 160 PIPE-TO-2" ELBOW | CF1 | C5.21 | UT | PT | | SO23-XXVII-30 6, SO23-XXVII-20 48 |
| 02-070-1080 | 2" ELBOW-TO-2" SCH 160 PIPE | CF1 | C5.21 | UT | PT | | SO23-XXVII-30.6, SO23-XXVII-20 48 |
| 02-070-1090 | 2" SCH 160 PIPE-TO-2" ELBOW | CF1 | C5 21 | UT | PT | | SO23-XXVII-30.6, SO23-XXVII-20.48 |
| 02-070-130 | 4" SCH 80S PIPE-TO-4" ELBOW | CF1 | C5.21 | UT | PT | | SO23-XXVII-30 6, SO23-XXVII-20.48 |
| 02-071-1170 | 1 1/2" X 2" REDUCER-TO-2" TEE | CF1 | C5.21 | UT | PT | | SO23-XXVII-30.6, SO23-XXVII-20 48 |
| 02-071-1210 | 2" ELBOW-TO-2" SCH 80S PIPE | CF1 | C5.21 | UT | PT | | SO23-XXVII-30.6, SO23-XXVII-20.48 |
| 02-071-1230 | 2" SCH 80S PIPE-TO-2" TEE | CF1 | C5.21 | UT | PT | | SO23-XXVII-30 6, SO23-XXVII-20.48 |
| 02-071-1240 | 2" TEE-TO-SWAGE | CF1 | C5.21 | UT | PT | | SO23-XXVII-30 6, SO23-XXVII-20.48 |
| 02-071-1247 | 2" SCH 80S TEE-TO-2" X 3" REDUCER | CF1 | C5.21 | UT | PT | | SO23-XXVII-30 6, SO23-XXVII-20.48 |
| 02-071-1250 | 2" X 3" REDUCER-TO-2FE9314 FLANGE | CF1 | C5 21 | UT | PT | | SO23-XXVII-30 6, SO23-XXVII-20.48 |
| 02-071-450 | 2" TEE-TO-2" SCH 80S PIPE | CF1 | C5.21 | UT | PT | | SO23-XXVII-30.6, SO23-XXVII-20.48 |
| 02-071-460 | 2" SCH 80S PIPE-TO-ELBOW | CF1 | C5 21 | UT | PT | | SO23-XXVII-30 6, SO23-XXVII-20.48 |
| 02-071-470 | 2" ELBOW-TO-FLANGE | CF1 | C5.21 | UT | PT | | SO23-XXVII-30 6, SO23-XXVII-20.48 |
| 02-071-480 | 2" FLANGE-TO-2" SCH 80S PIPE | CF1 | C5.21 | UT | PT | | SO23-XXVII-30.6, SO23-XXVII-20 48 |
| 02-071-520 | 2" SCH 80S PIPE-TO-ELBOW | CF1 | C5.21 | UT | PT | | SO23-XXVII-30.6, SO23-XXVII-20.48 |
| 02-071-530 | 2" ELBOW-TO-2" SCH 80S PIPE | CF1 | C5.21 | UT | PT | | SO23-XXVII-30.6, SO23-XXVII-20.48 |
| 02-071-590 | 2" SCH 80S PIPE-TO-ELBOW | CF1 | C5.21 | UT | PT | | SO23-XXVII-30.6, SO23-XXVII-20.48 |
| 02-071-780 | 3" X 2" REDUCER-TO-2" SCH 80S PIPE | CF1 | C5.21 | UT | PT | | SO23-XXVII-30.6, SO23-XXVII-20.48 |
| 02-073-072 | 8" SCH 140 PIPE-TO-PENETRATION NO. 51 | CF1 | C5.11 | UT | PT | | SO23-XXVII-30 6, SO23-XXVII-20.48 |
| 02-073-140 | 8" SCH 140 PIPE-TO-PENETRATION NO. 50 | CF1 | C5.11 | UT | PT | | SO23-XXVII-30.6, SO23-XXVII-20.48 |
| 02-073-164 | 8" SCH 140 PIPE-TO-PENETRATION NO. 49 | CF1 | C5.11 | UT | PT | | SO23-XXVII-30 6, SO23-XXVII-20 48 |
| 02-074-060 | GUIDE & Y-STOP | F-A | F1.20B | | | VT-3 | SO23-XXVII-20.51 |
| 02-074-062 | GUIDE & Y-STOP | F-A | F1.20B | | | VT-3 | SO23-XXVII-20.51 |
| 02-074-063 | Y-STOP | F-A | F1.20A | | | VT-3 | SO23-XXVII-20.51 |
| 02-074-064 | Y-STOP | F-A | F1.20A | | | VT-3 | SO23-XXVII-20.51 |
| 02-074-066-F | SOLID MOUNT WITH WELDED SUPPORT LUGS | F-A | F1.20A | | | VT-3 | SO23-XXVII-20 51 |
| 02-074-069 | GUIDE & Y-STOP | F-A | F1.20B | | | VT-3 | SO23-XXVII-20.51 |
| 02-076-107-F | SNUBBER | F-A | F1.20C | | | VT-3 | SO23-XXVII-20.51 |

## ISI U2C12 COMPLETED EXAMINATIONS

| | | | | | | | |
|---|---|---|---|---|---|---|---|
| 02-076-107-I | SNUBBER W/WELDED DUMMY PIPE & CURVED PLATE | C-C | C3 20 | | PT | | SO23-XXVII-20 48 |
| 02-076-108 | Y-STOP | F-A | F1.20A | | | VT-3 | SO23-XXVII-20.51 |
| 02-076-111-F | SWAY STRUT | F-A | F1.20A | | | VT-3 | SO23-XXVII-20.51 |
| 02-076-113 | GUIDE | F-A | F1.20A | | | VT-3 | SO23-XXVII-20 51 |
| 02-076-114-F | ANCHOR SUPPORT | F-A | F1.20B | | | VT-3 | SO23-XXVII-20 51 |
| 02-076-115-F | ANCHOR | F-A | F1.20B | | | VT-3 | SO23-XXVII-20.51 |
| 02-076-202-F | SWAY STRUT | F-A | F1.20A | | | VT-3 | SO23-XXVII-20.51 |
| 02-076-202-I | SWAY STRUT W/INTEG WELDED ATTACH (SNUBBER REPL DCP 2-6683.0P) | C-C | C3.20 | | PT | | SO23-XXVII-20.48 |
| 02-076-205-F | SNUBBERS (FORMERLY 02-077-068) | F-A | F1 20C | | | VT-3 | SO23-XXVII-20 51 |
| 02-076-205-I | SNUBBERS W/INTEGRALLY WELDED ATTACHMENT (FORMERLY 02-077-068) | C-C | C3 20 | | PT | | SO23-XXVII-20 48 |
| 02-077-100A | PIPE PUP-TO-REDUCER (12" X 10") | CF1 | C5.11 | UT | PT | | SO23-XXVII-30.6, SO23-XXVII-20 48 |
| 02-077-104 | REDUCER-TO-12" SCH 40 PIPE | CF1 | C5.11 | UT | PT | | SO23-XXVII-30.6, SO23-XXVII-20 48 |
| | | | | | | | |
| | | | | | | | |
| Notes : 1) Due to design & access provisions I e., proximity of flow skirt & several of the core stop lugs limits the complete UT scanning of the RPV bottom head peel welds. | | | | | | | |
| Following is the breakdown of individual peel weld coverage, | | | | | | | |
| Weld ID: 02-001-002 02-001-003 02-001-004 02-001-005 02-001-006 02-001-007 | | | | | | | |
| Coverage: 61% 55.9% 62.7% 61% 61% 56.8% | | | | | | | |

## UNIT-2 CYCLE-12, CLASS-1 AND 2, SYSTEM PRESSURE TESTS COMPLETED

| System | Procedure |
|---|---|
| 1) Reactor Coolant | SO23-XVII-3.1.1 |
| 2) Chemical & Volume Control | SO23-XVII-3.2.1 |
| 3) Main Steam | SO23-XVII-3.2.2 |
| 4) Main & Aux. Feed Water | SO23-XVII-3.2.3 |
| 5) Safety Injection | SO23-XVII-3.2.4 |
| 6) Containment Spray | SO23-XVII-3.2.5 |

# 9 ATTACHMENT - 2

## FORM NIS-2 OWNER'S REPORTS FOR REPAIRS AND REPLACEMENTS

**ATTACHMENT - 2**

**( 59 Double Sided Pages)**

**[Cross-Reference: Section 5 – NDE and ISI Program Procedures]**

# FORM NIS-2 OWNER'S REPORT FOR REPAIRS OR REPLACEMENTS

As Required by the Provisions of the ASME Code Section XI

1. Owner: Southern California Edison Company
2244 Walnut Grove Avenue
Rosemead, California 91770

Unit: A
MO: 00021251000
Rspec: ASME SECTION XI DATA-0207
PID: N/A
N5: N/A

2. Plant: San Onofre Nuclear Generating Station
San Clemente, California 92674-012

3. Work Performed by: Southern California Edison Company

Type Code Symbol Stamp: N/A
Authorization No: N/A
Expiration Date: N/A

4. Identification of System: Safety Injection and Shutdown Cooling

5. (a) Applicable Construction Code: ASME Section III, Class 2, 1974 Ed., S.'74 Addenda; Code Case: None

(b) Applicable Edition of Section XI Utilized for Repairs or Replacements: 1989 Edition, No Addenda

6. Identification of Components Repaired or Replaced and Replacement Components:

| Name of Component | Name of Manufacturer | Manufacturer Serial No. | National Board No. | Other Identification | Year Built | Repaired, Replaced or Replacement | ASME Code Stamped Yes/No |
|---|---|---|---|---|---|---|---|
| 6" x 8" Relief Valve | Crosby Valve & Gage | N60061-00-0003 | N/A | 026-44409 | 1980 | — | Yes |
| Spring | Crosby Valve & Gage | NX3071-0008 | N/A | RSO-5256-85, Alloy X-750 | N/A | Replacement | No |
| Spring Washer (2) | Crosby Valve & Gage | N91313-99-022 N91313-99-023 | N/A | RSO-5256-85, SA479 316 | N/A | Replacement | No |
| 1"-8 x 6" All-Thread Stud (2) | Nova Machine Products | Ht. #69463 | N/A | Fabricated on MO 98031053, SA193 B7 | N/A | Replacement | No |

7. Description of Work:

The relief valve (S/N N60061-00-0003) that was removed from plant location 2PSV9349 on MO 99081630 was rebuilt using an in-kind replacement spring and washer assembly and (2) new replacement long bonnet studs. The (2) new 6" bonnet studs were fabricated on MO 98031053. The rebuilt valve was bench tested and returned to stock.

8. Tests Conducted: N/A Pressure: N/A Temp: N/A

Note Supplemental sheets in the form of lists, sketches, or drawings may be used provided (1) size is 8 1/2 in. x 11 in., (2) information in Items 1 through 6 on this report is included on each sheet, (3) each sheet is numbered and the number of sheets is recorded at the top of this form, and (4) each sheet is initialed and dated by the Owner or Owner's designee and the AIA.

## FORM NIS-2 (back)

9. Remarks: None.

(Applicable Manufacturer's Data Reports are available on-site)

### CERTIFICATE OF COMPLIANCE

We certify that the statements made in the report are correct and this **replacement** conforms to the rules of the ASME Code, Section XI.
repair or replacement

Type Code Symbol Stamp: N/A

Certificate of Authorizaton No: N/A  Expiration Date: N/A

Signed: [signature] Supervising ASME Codes Engineer Date: 1/9/02
Owner or Owner's Designee, Title

### CERTIFICATE OF INSPECTION

I, the undersigned holding a valid commission issued by the National Board of Boiler and Pressure Vessel Inspectors and the State or Province of **California**, and employed by **Factory Mutual Insurance Company** of **Johnston, Rhode Island** have inspected the components described in this Owner's Report during the period 02/06/01 to 01/11/02, and state that to the best of my knowledge and belief, the Owner has performed examinations and taken corrective measures described in this Owner's Report in accordance with the requirements of the ASME Code, Section XI.

By signing this certificate, neither the Inspector nor his employer makes any warranty, expressed or implied, concerning the examinations and corrective measures described in this Owner's Report. Furthermore, neither the Inspector nor his employer shall be liable in any manner for any personal injury or property damage or a loss of any kind arising from or connected with this inspection.

[signature] Commissions 1867 California
Inspector's Signature  National Board, State, Province, and Endorsements

Date Jan. 11, 2002

# FORM NIS-2 OWNER'S REPORT FOR REPAIRS OR REPLACEMENTS

As Required by the Provisions of the ASME Code Section XI

1. Owner: Southern California Edison Company
2244 Walnut Grove Avenue
Rosemead, California 91770

Unit: A
MO: 00021515000
Rspec: ASME SECTION XI DATA-0207
PID: N/A
N5: N/A

2. Plant: San Onofre Nuclear Generating Station
San Clemente, California 92674-012

3. Work Performed by: Southern California Edison Company

Type Code Symbol Stamp: N/A
Authorization No: N/A
Expiration Date: N/A

4. Identification of System: Safety Injection and Shutdown Cooling

5. (a) Applicable Construction Code: ASME Section III, Class 2, 1974 Ed , S.'74 Addenda; Code Case: None

(b) Applicable Edition of Section XI Utilized for Repairs or Replacements: 1989 Edition, No Addenda

6. Identification of Components Repaired or Replaced and Replacement Components:

| Name of Component | Name of Manufacturer | Manufacturer Serial No. | National Board No. | Other Identification | Year Built | Repaired, Replaced or Replacement | ASME Code Stamped Yes/No |
|---|---|---|---|---|---|---|---|
| 6" x 8" Relief Valve (L-Top) | Crosby Valve & Gage | N60061-00-0002 | N/A | 026-44409 | 1978 | — | Yes |
| Nozzle | Crosby Valve & Gage | N91310-35-0007 | N/A | RSO-2557-84, SA182 F316L | N/A | Replacement | No |
| 1"-8 x 6" All-Thread Stud (2) | Nova Machine Products | Ht. #69463 | N/A | Fabricated on MO 98031053, SA193 B7 | N/A | Replacement | No |

7. Description of Work:

The relief valve (S/N N60061-00-0002) that was removed from plant location 3PSV9349 on MO 98051989 was rebuilt using an in-kind replacement nozzle and (2) new replacement long bonnet studs. The (2) new 6" bonnet studs were fabricated on MO 98031053. The rebuilt valve was bench tested and returned to stock.

8. Tests Conducted: N/A Pressure: N/A Temp: N/A

Note: Supplemental sheets in the form of lists, sketches, or drawings may be used provided (1) size is 8 1/2 in. x 11 in., (2) information in Items 1 through 6 on this report is included on each sheet, (3) each sheet is numbered and the number of sheets is recorded at the top of this form, and (4) each sheet is initialed and dated by the Owner or Owner's designee and the AIA.

# FORM NIS-2 (back)

9. Remarks: None.

(Applicable Manufacturer's Data Reports are available on-site)

## CERTIFICATE OF COMPLIANCE

We certify that the statements made in the report are correct and this **replacement** conforms to the rules of the ASME Code, Section XI.
repair or replacement

Type Code Symbol Stamp: N/A

Certificate of Authorizaton No: N/A  Expiration Date: N/A

Signed: _____ Supervising ASME Codes Engineer Date: 1/9/02
Owner or Owner's Designee, Title

## CERTIFICATE OF INSPECTION

I, the undersigned holding a valid commission issued by the National Board of Boiler and Pressure Vessel Inspectors and the State or Province of **California**, and employed by **Factory Mutual Insurance Company** of **Johnston, Rhode Island** have inspected the components described in this Owner's Report during the period 08/03/01 to 02/11/02, and state that to the best of my knowledge and belief, the Owner has performed examinations and taken corrective measures described in this Owner's Report in accordance with the requirements of the ASME Code, Section XI.

By signing this certificate, neither the Inspector nor his employer makes any warranty, expressed or implied, concerning the examinations and corrective measures described in this Owner's Report. Furthermore, neither the Inspector nor his employer shall be liable in any manner for any personal injury or property damage or a loss of any kind arising from or connected with this inspection.

_____ Commissions 1867 California
Inspector's Signature  National Board, State, Province, and Endorsements

Date Jan. 11, 2002

WO: 00021515000

# FORM NIS-2 OWNER'S REPORT FOR REPAIRS OR REPLACEMENTS

As Required by the Provisions of the ASME Code Section XI

1. Owner: Southern California Edison Company
2244 Walnut Grove Avenue
Rosemead, California 91770

Unit: 2
MO: 00080665000
Rspec: ASME SECTION XI DATA-0127
PID: 40112B (C3)
N5: S2-1204-12

2. Plant: San Onofre Nuclear Generating Station
San Clemente, California 92674-0128

3. Work Performed by: Southern California Edison Company

Type Code Symbol Stamp: N/A
Authorization No: N/A
Expiration Date: N/A

4. Identification of System: Safety Injection and Shutdown Cooling

5. (a) Applicable Construction Code: ASME Section III, Class 2, 1977 Edition, No Addenda; Code Case: None

(b) Applicable Edition of Section XI Utilized for Repairs or Replacements: 1989 Edition, No Addenda

6. Identification of Components Repaired or Replaced and Replacement Components:

| Name of Component | Name of Manufacturer | Manufacturer Serial No. | National Board No. | Other Identification | Year Built | Repaired, Replaced or Replacement | ASME Code Stamped Yes/No |
|---|---|---|---|---|---|---|---|
| 10" 342# Globe Valve | BW/IP International | 79450 | N/A | 2HV8160 | 1983 | — | Yes |
| 1" x 7" All-Thread Stud (16) | BW/IP International | Ht. #6055603, N Code #2F84 | N/A | RSO-3388-85, SA540 B23 | 1985 | Replacement | No |
| 1"-11 1/2" Hex Nut (32) | BW/IP International | Ht. #847541, N Code #5K15 | N/A | RSO-4793-85, SA194 8M | 1985 | Replacement | No |

7. Description of Work:

Replaced (16) each bonnet studs and (32) each bonnet nuts with in-kind replacement bolting on the valve located in plant position 2HV8160 (s/n 79450).

8. Tests Conducted: System Functional Pressure Test Pressure: NOP Temp: N/A

See: AR 000800457-03

Note Supplemental sheets in the form of lists, sketches, or drawings may be used provided (1) size is 8 1/2 in x 11 in., (2) information in Items 1 through 6 on this report is included on each sheet, (3) each sheet is numbered and the number of sheets is recorded at the top of this form, and (4) each sheet is initialed and dated by the Owner or Owner's designee and the AIA.

## FORM NIS-2 (back)

9. Remarks: The replacement bolting was certified to a higher code class ASME III-1 as allowed by ASME III paragraph NCA-2134.

(Applicable Manufacturer's Data Reports are available on-site)

### CERTIFICATE OF COMPLIANCE

We certify that the statements made in the report are correct and this **replacement** conforms to the rules of the ASME Code, Section XI.
repair or replacement

Type Code Symbol Stamp: N/A

Certificate of Authorizaton No: N/A  Expiration Date: N/A

Signed: _____ Supervising ASME Codes Engineer Date: 8/5/02
Owner or Owner's Designee, Title

### CERTIFICATE OF INSPECTION

I, the undersigned holding a valid commission issued by the National Board of Boiler and Pressure Vessel Inspectors and the State or Province of **California**, and employed by **Factory Mutual Insurance Company** of **Johnston, Rhode Island** have inspected the components described in this Owner's Report during the period 03/07/02 to 08/06/02, and state that to the best of my knowledge and belief, the Owner has performed examinations and taken corrective measures described in this Owner's Report in accordance with the requirements of the ASME Code, Section XI.

By signing this certificate, neither the Inspector nor his employer makes any warranty, expressed or implied, concerning the examinations and corrective measures described in this Owner's Report. Furthermore, neither the Inspector nor his employer shall be liable in any manner for any personal injury or property damage or a loss of any kind arising from or connected with this inspection.

_____ Commissions 1862 California
Inspector's Signature  National Board, State, Province, and Endorsements

Date Aug. 6, 2002

WO: 00080665000

# FORM NIS-2 OWNER'S REPORT FOR REPAIRS OR REPLACEMENTS

As Required by the Provisions of the ASME Code Section XI

1. Owner: Southern California Edison Company
2244 Walnut Grove Avenue
Rosemead, California 91770

Unit: A
MO: 00110659000
Rspec: 046-00
PID: N/A
N5: N/A

2. Plant: San Onofre Nuclear Generating Station
San Clemente, California 92674-012

3. Work Performed by: Southern California Edison Company

Type Code Symbol Stamp: N/A
Authorization No: N/A
Expiration Date: N/A

4. Identification of System: Feedwater

5. (a) Applicable Construction Code: ASME Section III, Class 2, 1974 Edition, Summer 1975 Addenda; Code Case: None

(b) Applicable Edition of Section XI Utilized for Repairs or Replacements: 1989 Edition, No Addenda

6. Identification of Components Repaired or Replaced and Replacement Components:

| Name of Component | Name of Manufacturer | Manufacturer Serial No. | National Board No. | Other Identification | Year Built | Repaired, Replaced or Replacement | ASME Code Stamped Yes/No |
|---|---|---|---|---|---|---|---|
| Valve Bonnet | WKM (Cooper) | Ht. #1-4743 | N/A | Removed from 2HV4052 (valve s/n 503456) on MO 97011254001 | N/A | Repaired | No |

7. Description of Work:

Performed weld build-up on corroded surfaces of bonnet stuffing box to restore bonnet to OEM dimensions in accordance with Weld Record WR3-00-492 and Repair Specification 046-00. Performed 3MT-136-01 on the final weld surface after machining with satisfactory results, and returned bonnet to warehouse stock.

8. Tests Conducted: N/A  Pressure: N/A  Temp: N/A

Note Supplemental sheets in the form of lists, sketches, or drawings may be used provided (1) size is 8 1/2 in. x 11 in., (2) information in Items 1 through 6 on this report is included on each sheet, (3) each sheet is numbered and the number of sheets is recorded at the top of this form, and (4) each sheet is initialed and dated by the Owner or Owner's designee and the AIA.

19 MO# 00110659000

## FORM NIS-2 (back)

9. Remarks: None.

(Applicable Manufacturer's Data Reports are available on-site)

### CERTIFICATE OF COMPLIANCE

We certify that the statements made in the report are correct and this repair conforms to the rules of the ASME Code, Section XI.
repair or replacement

Type Code Symbol Stamp: N/A

Certificate of Authorizaton No: N/A  Expiration Date: N/A

Signed: [signature] Supervising ASME Codes Engineer Date: 11/6/01
Owner or Owner's Designee, Title

### CERTIFICATE OF INSPECTION

I, the undersigned holding a valid commission issued by the National Board of Boiler and Pressure Vessel Inspectors and the State or Province of California, and employed by Factory Mutual Insurance Company of Johnston, Rhode Island have inspected the components described in this Owner's Report during the period 11/4/01 to 11/7/01, and state that to the best of my knowledge and belief, the Owner has performed examinations and taken corrective measures described in this Owner's Report in accordance with the requirements of the ASME Code, Section XI.

By signing this certificate, neither the Inspector nor his employer makes any warranty, expressed or implied, concerning the examinations and corrective measures described in this Owner's Report. Furthermore, neither the Inspector nor his employer shall be liable in any manner for any personal injury or property damage or a loss of any kind arising from or connected with this inspection.

[signature] Commissions 1862 California
Inspector's Signature  National Board, State, Province, and Endorsements

Date Nov. 7, 2001

WO: 00110659000

19

WO# 00110659000

# FORM NIS-2 OWNER'S REPORT FOR REPAIRS OR REPLACEMENTS

As Required by the Provisions of the ASME Code Section XI

1. Owner: Southern California Edison Company
2244 Walnut Grove Avenue
Rosemead, California 91770

Unit: 2
MO: 00111305000
Rspec: GEN-106 R2
PID: 40111A
N5: S2-1201-3

2. Plant: San Onofre Nuclear Generating Station
San Clemente, California 92674-012

3. Work Performed by: Southern California Edison Company

Type Code Symbol Stamp: N/A
Authorization No: N/A
Expiration Date: N/A

4. Identification of System: Reactor Coolant

5. (a) Applicable Construction Code: ASME Section III, Class 1, 1971 Ed., W.'71 Add. (Pump), 1980 Ed., S.'82 Add. (Seal Cartridge), Code Cases: None

(b) Applicable Edition of Section XI Utilized for Repairs or Replacements: 1989 Edition, No Addenda

6. Identification of Components Repaired or Replaced and Replacement Components:

| Name of Component | Name of Manufacturer | Manufacturer Serial No. | National Board No. | Other Identification | Year Built | Repaired, Replaced or Replacement | ASME Code Stamped Yes/No |
|---|---|---|---|---|---|---|---|
| 36" Reactor Coolant Pump | Byron Jackson | 701-N-0557 | N/A | S21201MP004 | 1977 | — | Yes |
| Mechanical Seal Cartridge | Bingham-Willamette | 1714880-8 | 1168 | SO23-CART-#18 | 1986 | Replaced | Yes |
| Mechanical Seal Cartridge | Bingham-Willamette | 1659057-6 | 1174 | SO23-CART-#24, Rebuilt under MO 01010320 | 1986 | Replacement | Yes |

7. Description of Work:

The RCP seal cartridge was replaced with a spare which had been rebuilt in accordance with the SONGS rebuild program. The removed seal cartridge was placed into the SONGS rebuild program to be rebuilt under MO 01021219.

8. Tests Conducted: System Leakage Pressure Test Pressure: NOP Temp: NOT
See: AR 011000572-05

Note: Supplemental sheets in the form of lists, sketches, or drawings may be used provided (1) size is 8 1/2 in. x 11 in., (2) information in Items 1 through 6 on this report is included on each sheet, (3) each sheet is numbered and the number of sheets is recorded at the top of this form, and (4) each sheet is initialed and dated by the Owner or Owner's designee and the AIA.

# FORM NIS-2 (back)

9. Remarks: None.

(Applicable Manufacturer's Data Reports are available on-site)

## CERTIFICATE OF COMPLIANCE

We certify that the statements made in the report are correct and this **replacement** conforms to the rules of the ASME Code, Section XI.
repair or replacement

Type Code Symbol Stamp: N/A

Certificate of Authorizaton No: N/A  Expiration Date: N/A

Signed: _____ Supervising ASME Codes Engineer Date: 1/10/02
Owner or Owner's Designee, Title

## CERTIFICATE OF INSPECTION

I, the undersigned holding a valid commission issued by the National Board of Boiler and Pressure Vessel Inspectors and the State or Province of **California**, and employed by **Factory Mutual Insurance Company** of **Johnston, Rhode Island** have inspected the components described in this Owner's Report during the period 01/26/01 to 01/11/02, and state that to the best of my knowledge and belief, the Owner has performed examinations and taken corrective measures described in this Owner's Report in accordance with the requirements of the ASME Code, Section XI.

By signing this certificate, neither the Inspector nor his employer makes any warranty, expressed or implied, concerning the examinations and corrective measures described in this Owner's Report. Furthermore, neither the Inspector nor his employer shall be liable in any manner for any personal injury or property damage or a loss of any kind arising from or connected with this inspection.

_____ Commissions 1862 California
Inspector's Signature  National Board, State, Province, and Endorsements

Date Jan. 11, 2002

WO 00111305000

# FORM NIS-2 OWNER'S REPORT FOR REPAIRS OR REPLACEMENTS

As Required by the Provisions of the ASME Code Section XI

1. Owner: Southern California Edison Company
2244 Walnut Grove Avenue
Rosemead, California 91770

Unit: 2
MO: 00111481001 00111481000
Rspec: GEN-107b R2, 004-02 R1
PID: 40111A
N5: N/A

2. Plant: San Onofre Nuclear Generating Station
San Clemente, California 92674-0128

3. Work Performed by: Southern California Edison Company

Type Code Symbol Stamp: N/A
Authorization No: N/A
Expiration Date: N/A

4. Identification of System: Reactor Coolant

5. (a) Applicable Construction Code: ASME Section III, Class 1, 1971 Edition, W.'73 Addenda; Code Case: None

5. (b) Applicable Edition of Section XI Utilized for Repairs or Replacements: 1989 Edition, No Addenda

6. Identification of Components Repaired or Replaced and Replacement Components:

| Name of Component | Name of Manufacturer | Manufacturer Serial No. | National Board No. | Other Identification | Year Built | Repaired, Replaced or Replacement | ASME Code Stamped Yes/No |
|---|---|---|---|---|---|---|---|
| CEDM #61 Vent Valve Assembly | ABB Combustion Engineering | 1370-152 | N/A | S21104CEDM #61 | 1978 | Repaired | Yes |
| Housing Nut | ABB Combustion Engineering | S/N 414, Ht. #MT13223 | N/A | RSO-1391-97, SA479 T316 | N/A | Replacement | Yes |

7. Description of Work:

Replaced the housing seal nut on CEDM #61vent valve assembly in accordance with Repair Specification GEN-107b Rev. 2. The ball seal housing to housing nut seal weld was removed and the weld prep area was restored in accordance with Repair Specification 004-02 Rev. 1. NDE examination 2PT-094-02 was performed on the ball valve seal housing newly machined surface with satisfactory results. Note: No PT examination could be performed after machining of detail "z" (step X12 of revision of the MO) due to inaccessibility (see attachments included in work package).

8. Tests Conducted: System Leakage Pressure Test Pressure: NOP Temp: NOT

VT-2 performed per Procedure SO23-XVII-3.1.1

Note Supplemental sheets in the form of lists, sketches, or drawings may be used provided (1) size is 8 1/2 in x 11 in., (2) information in Items 1 through 6 on this report is included on each sheet, (3) each sheet is numbered and the number of sheets is recorded at the top of this form, and (4) each sheet is initialed and dated by the Owner or Owner's designee and the AIA.

## FORM NIS-2 (back)

9. Remarks: None.

(Applicable Manufacturer's Data Reports are available on-site)

### CERTIFICATE OF COMPLIANCE

We certify that the statements made in the report are correct and this **repair and replacement** conforms to the rules of the ASME Code, Section XI.
repair or replacement

Type Code Symbol Stamp: N/A

Certificate of Authorizaton No: N/A  Expiration Date: N/A

Signed: _____ Supervising ASME Codes Engineer Date: 8/15/02
Owner or Owner's Designee, Title

### CERTIFICATE OF INSPECTION

I, the undersigned holding a valid commission issued by the National Board of Boiler and Pressure Vessel Inspectors and the State or Province of **California**, and employed by **Factory Mutual Insurance Company** of **Johnston, Rhode Island** have inspected the components described in this Owner's Report during the period 06/06/02 to 08/16/02, and state that to the best of my knowledge and belief, the Owner has performed examinations and taken corrective measures described in this Owner's Report in accordance with the requirements of the ASME Code, Section XI.

By signing this certificate, neither the Inspector nor his employer makes any warranty, expressed or implied, concerning the examinations and corrective measures described in this Owner's Report. Furthermore, neither the Inspector nor his employer shall be liable in any manner for any personal injury or property damage or a loss of any kind arising from or connected with this inspection.

_____ Commissions 1862 California
Inspector's Signature  National Board, State, Province, and Endorsements

Date Aug. 16, 2002

WO 00111481001

# FORM NIS-2 OWNER'S REPORT FOR REPAIRS OR REPLACEMENTS

As Required by the Provisions of the ASME Code Section XI

1. Owner: Southern California Edison Company
2244 Walnut Grove Avenue
Rosemead, California 91770

Unit: 2
MO: 00111571000 01111127000, 02051509000
Rspec: GEN-174
PID: 40130C
N5: S2-1201-3

2. Plant: San Onofre Nuclear Generating Station
San Clemente, California 92674-0128

3. Work Performed by: Southern California Edison Company

Type Code Symbol Stamp: N/A
Authorization No: N/A
Expiration Date: N/A

4. Identification of System: Reactor Coolant

5. (a) Applicable Construction Code: ASME Section III, Class 1, 1971 Ed., W.'71 Add. (Pump); Code Case: None

5. (b) Applicable Edition of Section XI Utilized for Repairs or Replacements: 1989 Edition, No Addenda

6. Identification of Components Repaired or Replaced and Replacement Components:

| Name of Component | Name of Manufacturer | Manufacturer Serial No. | National Board No. | Other Identification | Year Built | Repaired, Replaced or Replacement | ASME Code Stamped Yes/No |
|---|---|---|---|---|---|---|---|
| Reactor Coolant Pump | Byron Jackson | 7701-N-0560 | N/A | S21201MP003 | 1978 | — | Yes |
| Case Nuts (3) | Byron Jackson | Ht. #6072143 | N/A | RSO-0939-86, SA194 Gr.7 | N/A | Replacement | No |
| Case Nuts (13) | Byron Jackson | Ht. #6059588 | N/A | RSO3-P-991-83, SA194 Gr.7 (CR-88-004) | N/A | Replacement | No |

7. Description of Work:

MO 01111127 replaced (8) each driver mount to case nuts and performed a VT-1 examination of the bolting with satisfactory results. MO 02051509 replaced (8) each driver mount to case nuts and performed a VT-1 examination of the bolting with satisfactory results. MO 00111571 reassembled and installed the pump upper case.

8. Tests Conducted: System Leakage Pressure Test Pressure: NOP Temp: NOT

VT-2 performed per Procedure SO23-XVII-3.1.1

Note Supplemental sheets in the form of lists, sketches, or drawings may be used provided (1) size is 8 1/2 in x 11 in., (2) information in Items 1 through 6 on this report is included on each sheet, (3) each sheet is numbered and the number of sheets is recorded at the top of this form, and (4) each sheet is initialed and dated by the Owner or Owner's designee and the AIA.

# FORM NIS-2 (back)

9. Remarks: CR-88-004 reconciles (13) replacement case nuts which were certified to ASME III-1, 1974 Edition, W.'74 Addenda.

(Applicable Manufacturer's Data Reports are available on-site)

## CERTIFICATE OF COMPLIANCE

We certify that the statements made in the report are correct and this **replacement** conforms to the rules of the ASME Code, Section XI.
repair or replacement

Type Code Symbol Stamp: N/A

Certificate of Authorizaton No: N/A  Expiration Date: N/A

Signed: _____ Supervising ASME Codes Engineer Date: 7/29/02
Owner or Owner's Designee, Title

## CERTIFICATE OF INSPECTION

I, the undersigned holding a valid commission issued by the National Board of Boiler and Pressure Vessel Inspectors and the State or Province of **California**, and employed by **Factory Mutual Insurance Company** of **Johnston, Rhode Island** have inspected the components described in this Owner's Report during the period 04/09/02 to 07/30/02, and state that to the best of my knowledge and belief, the Owner has performed examinations and taken corrective measures described in this Owner's Report in accordance with the requirements of the ASME Code, Section XI.

By signing this certificate, neither the Inspector nor his employer makes any warranty, expressed or implied, concerning the examinations and corrective measures described in this Owner's Report. Furthermore, neither the Inspector nor his employer shall be liable in any manner for any personal injury or property damage or a loss of any kind arising from or connected with this inspection.

_____ Commissions 1862 California
Inspector's Signature  National Board, State, Province, and Endorsements

Date July 30, 2002

WO: 00111571000

# FORM NIS-2 OWNER'S REPORT FOR REPAIRS OR REPLACEMENTS

As Required by the Provisions of the ASME Code Section XI

1. Owner: Southern California Edison Company
2244 Walnut Grove Avenue
Rosemead, California 91770

Unit: 2
MO: 01010120000
Rspec: GEN-106 R2
PID: 40111A
N5: S2-1201-3

2. Plant: San Onofre Nuclear Generating Station
San Clemente, California 92674-012

3. Work Performed by: Southern California Edison Company

Type Code Symbol Stamp: N/A
Authorization No: N/A
Expiration Date: N/A

4. Identification of System: Reactor Coolant

5. (a) Applicable Construction Code: ASME Section III, Class 1, 1971 Ed., W.'71 Add. (Pump), 1980 Ed., S.'82 Add. (Seal Cartridge), Code Case: None

(b) Applicable Edition of Section XI Utilized for Repairs or Replacements: 1989 Edition, No Addenda

6. Identification of Components Repaired or Replaced and Replacement Components:

| Name of Component | Name of Manufacturer | Manufacturer Serial No. | National Board No. | Other Identification | Year Built | Repaired, Replaced or Replacement | ASME Code Stamped Yes/No |
|---|---|---|---|---|---|---|---|
| 36" Reactor Coolant Pump | Byron Jackson | 701-N-0558 | N/A | S21201MP001 | 1977 | — | Yes |
| Mechanical Seal Cartridge | Bingham-Williamette | 1659057-11 | 1219 | SO23-CART-#25 | 1986 | Replaced | Yes |
| Mechanical Seal Cartridge | Bingham-Williamette | 1659057-2 | 1173 | SO23-CART-#23, Rebuilt under MO 00110595 | 1986 | Replacement | Yes |

7. Description of Work:

The RCP seal cartridge was replaced with a spare which had been rebuilt in accordance with the SONGS rebuild program. The removed seal cartridge was placed into the SONGS rebuild program to be rebuilt under MO 01021217.

8. Tests Conducted: System Leakage Pressure Test Pressure: NOP Temp: NOT

See: AR 011000572-03

Note Supplemental sheets in the form of lists, sketches, or drawings may be used provided (1) size is 8 1/2 in x 11 in., (2) information in Items 1 through 6 on this report is included on each sheet, (3) each sheet is numbered and the number of sheets is recorded at the top of this form, and (4) each sheet is initialed and dated by the Owner or Owner's designee and the AIA.

# FORM NIS-2 (back)

9. Remarks: None.

(Applicable Manufacturer's Data Reports are available on-site)

## CERTIFICATE OF COMPLIANCE

We certify that the statements made in the report are correct and this **replacement** conforms to the rules of the ASME Code, Section XI.
repair or replacement

Type Code Symbol Stamp: N/A

Certificate of Authorizaton No: N/A  Expiration Date: N/A

Signed: _____ Supervising ASME Codes Engineer Date: 1/10/02
Owner or Owner's Designee, Title

## CERTIFICATE OF INSPECTION

I, the undersigned holding a valid commission issued by the National Board of Boiler and Pressure Vessel Inspectors and the State or Province of **California**, and employed by **Factory Mutual Insurance Company** of **Johnston, Rhode Island** have inspected the components described in this Owner's Report during the period 01/26/01 to 01/11/02, and state that to the best of my knowledge and belief, the Owner has performed examinations and taken corrective measures described in this Owner's Report in accordance with the requirements of the ASME Code, Section XI.

By signing this certificate, neither the Inspector nor his employer makes any warranty, expressed or implied, concerning the examinations and corrective measures described in this Owner's Report. Furthermore, neither the Inspector nor his employer shall be liable in any manner for any personal injury or property damage or a loss of any kind arising from or connected with this inspection.

_____ Commissions 1862 California NBI
Inspector's Signature  National Board, State, Province, and Endorsements

Date Jan 11, 2002

WO: 01010120000

# FORM NIS-2 OWNER'S REPORT FOR REPAIRS OR REPLACEMENTS

As Required by the Provisions of the ASME Code Section XI

1. Owner: Southern California Edison Company
2244 Walnut Grove Avenue
Rosemead, California 91770

Unit: 2
MO: 01010236000
Rspec: GEN-106 R2
PID: 40111A
N5: S2-1201-3

2. Plant: San Onofre Nuclear Generating Station
San Clemente, California 92674-012

3. Work Performed by: Southern California Edison Company

Type Code Symbol Stamp: N/A
Authorization No: N/A
Expiration Date: N/A

4. Identification of System: Reactor Coolant

5. (a) Applicable Construction Code: ASME Section III, Class 1, 1971 Ed., W.'71 Add. (Pump), 1980 Ed., S '82 Add. (Seal Cartridge), Code Cases: None

(b) Applicable Edition of Section XI Utilized for Repairs or Replacements: 1989 Edition, No Addenda

6. Identification of Components Repaired or Replaced and Replacement Components:

| Name of Component | Name of Manufacturer | Manufacturer Serial No. | National Board No. | Other Identification | Year Built | Repaired, Replaced or Replacement | ASME Code Stamped Yes/No |
|---|---|---|---|---|---|---|---|
| 36" Reactor Coolant Pump | Byron Jackson | 701-N-0559 | N/A | S21201MP002 | 1978 | — | Yes |
| Mechanical Seal Cartridge | Bingham-Willamette | 1714880-2 | 1171 | SO23-CART-#21 | 1986 | Replaced | Yes |
| Mechanical Seal Cartridge | Bingham-Willamette | 1714880-3 | 1172 | SO23-CART-#22, Rebuilt under MO 01010321 | 1986 | Replacement | Yes |

7. Description of Work:

The RCP seal cartridge was replaced with a spare which had been rebuilt in accordance with the SONGS rebuild program. The removed seal cartridge was placed into the SONGS rebuild program to be rebuilt under MO 01021218.

8. Tests Conducted: System Leakage Pressure Test Pressure: NOP Temp: NOT
See: AR 011000572-04

Note Supplemental sheets in the form of lists, sketches, or drawings may be used provided (1) size is 8 1/2 in x 11 in., (2) information in Items 1 through 6 on this report is included on each sheet, (3) each sheet is numbered and the number of sheets is recorded at the top of this form, and (4) each sheet is initialed and dated by the Owner or Owner's designee and the AIA.

# FORM NIS-2 (back)

9. Remarks: None.

(Applicable Manufacturer's Data Reports are available on-site)

## CERTIFICATE OF COMPLIANCE

We certify that the statements made in the report are correct and this **replacement** conforms to the rules of the ASME Code, Section XI.
repair or replacement

Type Code Symbol Stamp: N/A

Certificate of Authorizaton No: N/A  Expiration Date: N/A

Signed: _____ Supervising ASME Codes Engineer Date: 1/10/02
Owner or Owner's Designee, Title

## CERTIFICATE OF INSPECTION

I, the undersigned holding a valid commission issued by the National Board of Boiler and Pressure Vessel Inspectors and the State or Province of **California**, and employed by **Factory Mutual Insurance Company** of **Johnston, Rhode Island** have inspected the components described in this Owner's Report during the period 01/26/01 to 01/11/02, and state that to the best of my knowledge and belief, the Owner has performed examinations and taken corrective measures described in this Owner's Report in accordance with the requirements of the ASME Code, Section XI.

By signing this certificate, neither the Inspector nor his employer makes any warranty, expressed or implied, concerning the examinations and corrective measures described in this Owner's Report. Furthermore, neither the Inspector nor his employer shall be liable in any manner for any personal injury or property damage or a loss of any kind arising from or connected with this inspection.

_____ Commissions 1862 California
Inspector's Signature  National Board, State, Province, and Endorsements

Date Jan. 11, 2002

WO: 01010236000

# FORM NIS-2 OWNER'S REPORT FOR REPAIRS OR REPLACEMENTS

As Required by the Provisions of the ASME Code Section XI

1. Owner: Southern California Edison Company
2244 Walnut Grove Avenue
Rosemead, California 91770

Unit: N
MO: 01010806000
Rspec: GEN-166 R1
PID: N/A
N5: N/A

2. Plant: San Onofre Nuclear Generating Station
San Clemente, California 92674-012

3. Work Performed by: Southern California Edison Company

Type Code Symbol Stamp: N/A
Authorization No: N/A
Expiration Date: N/A

4. Identification of System: N/A - Spare

5. (a) Applicable Construction Code: ASME Section III, Class 2, 1974 Edition, S'.74 Addenda; Code Case: None

(b) Applicable Edition of Section XI Utilized for Repairs or Replacements: 1989 Edition, No Addenda

6. Identification of Components Repaired or Replaced and Replacement Components:

| Name of Component | Name of Manufacturer | Manufacturer Serial No. | National Board No. | Other Identification | Year Built | Repaired, Replaced or Replacement | ASME Code Stamped Yes/No |
|---|---|---|---|---|---|---|---|
| 1 3/8" x length 36" All-Thread Stock (12 ea.) | Nova Machine Products | Ht. #28007, Ht. Code NPN | N/A | RSO-1363-99, SA193 B7 (CR-3005-96) | N/A | Replacement | No |
| 1 3/8" x length 36" All-Thread Stock (24 ea.) | Mackson, Inc. | Ht. #4909848, Trace #1VK | N/A | RSO-0412-01, SA193 B7 (CR-3005-96) | N/A | Replacement | No |

7. Description of Work:

(107) spare replacement studs (for the inlets of the main steam safety valves) were manufactured by cutting to length and then machining as necessary from all-thread stock. Twelve pieces of all-thread stock (RSO-1363-99) were cut into studs (35 each, 9" lengths) and twenty-four pieces of all-thread stock (RSO-0412-01) were cut into studs (72 each, 9" lengths), with the required markings being transferred to the cut pieces in accordance with Repair Specification GEN-166 Revision 1 and DWG SO23-507-3-17, DCN #2 and DCN #7.

8. Tests Conducted. N/A  Pressure: N/A  Temp: N/A

Note Supplemental sheets in the form of lists, sketches, or drawings may be used provided (1) size is 8 1/2 in. x 11 in., (2) information in Items 1 through 6 on this report is included on each sheet, (3) each sheet is numbered and the number of sheets is recorded at the top of this form, and (4) each sheet is initialed and dated by the Owner or Owner's designee and the AIA.

## FORM NIS-2 (back)

9. Remarks: CR-3005-96 reconciles the replacement studs which were certified to ASME III-2, 1989 Edition, No Addenda.

(Applicable Manufacturer's Data Reports are available on-site)

### CERTIFICATE OF COMPLIANCE

We certify that the statements made in the report are correct and this **replacement** conforms to the rules of the ASME Code, Section XI.
repair or replacement

Type Code Symbol Stamp: N/A

Certificate of Authorizaton No: N/A  Expiration Date: N/A

Signed: _____ Supervising ASME Codes Engineer Date: 7/16/01
Owner or Owner's Designee, Title

### CERTIFICATE OF INSPECTION

I, the undersigned holding a valid commission issued by the National Board of Boiler and Pressure Vessel Inspectors and the State or Province of **California**, and employed by **Factory Mutual Insurance Company** of **Johnston, Rhode Island** have inspected the components described in this Owner's Report during the period 01/20/01 to 07/23/01, and state that to the best of my knowledge and belief, the Owner has performed examinations and taken corrective measures described in this Owner's Report in accordance with the requirements of the ASME Code, Section XI.

By signing this certificate, neither the Inspector nor his employer makes any warranty, expressed or implied, concerning the examinations and corrective measures described in this Owner's Report. Furthermore, neither the Inspector nor his employer shall be liable in any manner for any personal injury or property damage or a loss of any kind arising from or connected with this inspection.

_____ Commissions 1867 California
Inspector's Signature  National Board, State, Province, and Endorsements

Date July 23, 2001

WO 01010806000

# FORM NIS-2 OWNER'S REPORT FOR REPAIRS OR REPLACEMENTS

As Required by the Provisions of the ASME Code Section XI

1. Owner: Southern California Edison Company
2244 Walnut Grove Avenue
Rosemead, California 91770

Unit: 2
MO: 01011704000
Rspec: GEN-106 R2
PID: 40111A
N5: S2-1201-3

2. Plant: San Onofre Nuclear Generating Station
San Clemente, California 92674-012

3. Work Performed by: Southern California Edison Company

Type Code Symbol Stamp: N/A
Authorization No: N/A
Expiration Date: N/A

4. Identification of System: Reactor Coolant

5. (a) Applicable Construction Code: ASME Section III, Class 1, 1971 Ed., W.'71 Add. (Pump), 1980 Ed., S.'82 Add. (Seal Cartridge), Code Cases: None

5. (b) Applicable Edition of Section XI Utilized for Repairs or Replacements: 1989 Edition, No Addenda

6. Identification of Components Repaired or Replaced and Replacement Components:

| Name of Component | Name of Manufacturer | Manufacturer Serial No. | National Board No. | Other Identification | Year Built | Repaired, Replaced or Replacement | ASME Code Stamped Yes/No |
|---|---|---|---|---|---|---|---|
| 36" Reactor Coolant Pump | Byron Jackson | 701-N-0560 | N/A | S21201MP003 | 1978 | — | Yes |
| Mechanical Seal Cartridge | Bingham-Willamette | 1714880-1 | 1169 | SO23-CART-#19 | 1986 | Replaced | Yes |
| Mechanical Seal Cartridge | Bingham-Willamette | 1714880-6 | 1166 | SO23-CART-#16, Rebuilt on MO 96110495 | 1986 | Replacement | Yes |

7. Description of Work:

The RCP seal cartridge was replaced with a spare which had been rebuilt in accordance with the SONGS rebuild program. The removed seal cartridge was placed into the SONGS rebuild program to be rebuilt under MO 01061060.

8. Tests Conducted: System Leakage Pressure Test Pressure: NOP Temp: NOT

VT-2 performed per Procedure SO23-XVII-3.1.1

Note Supplemental sheets in the form of lists, sketches, or drawings may be used provided (1) size is 8 1/2 in. x 11 in., (2) information in Items 1 through 6 on this report is included on each sheet, (3) each sheet is numbered and the number of sheets is recorded at the top of this form, and (4) each sheet is initialed and dated by the Owner or Owner's designee and the AIA.

# FORM NIS-2 (back)

9. Remarks: None.

(Applicable Manufacturer's Data Reports are available on-site)

## CERTIFICATE OF COMPLIANCE

We certify that the statements made in the report are correct and this **replacement** conforms to the rules of the ASME Code, Section XI.
repair or replacement

Type Code Symbol Stamp: N/A

Certificate of Authorizaton No: N/A  Expiration Date: N/A

Signed: [signature] Supervising ASME Codes Engineer Date: 7/13/02
Owner or Owner's Designee, Title

## CERTIFICATE OF INSPECTION

I, the undersigned holding a valid commission issued by the National Board of Boiler and Pressure Vessel Inspectors and the State or Province of **California**, and employed by **Factory Mutual Insurance Company** of **Johnston, Rhode Island** have inspected the components described in this Owner's Report during the period 03/28/02 to 07/15/02, and state that to the best of my knowledge and belief, the Owner has performed examinations and taken corrective measures described in this Owner's Report in accordance with the requirements of the ASME Code, Section XI.

By signing this certificate, neither the Inspector nor his employer makes any warranty, expressed or implied, concerning the examinations and corrective measures described in this Owner's Report. Furthermore, neither the Inspector nor his employer shall be liable in any manner for any personal injury or property damage or a loss of any kind arising from or connected with this inspection.

[signature] Commissions 1862 California
Inspector's Signature  National Board, State, Province, and Endorsements

Date July 15, 2002

WO 01011704000

# FORM NIS-2 OWNER'S REPORT FOR REPAIRS OR REPLACEMENTS

As Required by the Provisions of the ASME Code Section XI

1. Owner: Southern California Edison Company
2244 Walnut Grove Avenue
Rosemead, California 91770

Unit: N
MO: 01030424000
Rspec: ASME SECTION XI DATA-0460
PID: N/A
N5: N/A

2. Plant: San Onofre Nuclear Generating Station
San Clemente, California 92674-012

3. Work Performed by: Southern California Edison Company

Type Code Symbol Stamp: N/A
Authorization No: N/A
Expiration Date: N/A

4. Identification of System: Chemical and Volume Control

5. (a) Applicable Construction Code: ASME Section III, Class 2, 1974 Edition, S.'74 Addenda; Code Case: None

(b) Applicable Edition of Section XI Utilized for Repairs or Replacements: 1989 Edition; No Addenda

6. Identification of Components Repaired or Replaced and Replacement Components:

| Name of Component | Name of Manufacturer | Manufacturer Serial No. | National Board No. | Other Identification | Year Built | Repaired, Replaced or Replacement | ASME Code Stamped Yes/No |
|---|---|---|---|---|---|---|---|
| 1 1/2" x 2" Nozzle Type Relief Valve | Crosby Valve & Gage | N59380-00-0009 | N/A | 025-83508-N59380-00-0009 | 1985 | — | Yes |
| Disc | Crosby Valve & Gage | N91241-48-0087, Ht. #1810-0-1023 | N/A | RSO-0439-01, Stellite 6B | | Replacement | No |

7. Description of Work:

Replaced the disc on spare safety relief valve (S/N N59380-00-0009) with an in-kind replacement. The valve was tested and returned to warehouse stock.

8. Tests Conducted: N/A  Pressure: N/A  Temp: N/A

mo# 01030424000

Note: Supplemental sheets in the form of lists, sketches, or drawings may be used provided (1) size is 8 1/2 in. x 11 in., (2) information in Items 1 through 6 on this report is included on each sheet, (3) each sheet is numbered and the number of sheets is recorded at the top of this form, and (4) each sheet is initialed and dated by the Owner or Owner's designee and the AIA.

## FORM NIS-2 (back)

9. Remarks: None

(Applicable Manufacturer's Data Reports are available on-site)

### CERTIFICATE OF COMPLIANCE

We certify that the statements made in the report are correct and this **replacement** conforms to the rules of the ASME Code, Section XI.
repair or replacement

Type Code Symbol Stamp: N/A

Certificate of Authorizaton No: N/A  Expiration Date: N/A

Signed: [signature] Supervising ASME Codes Engineer Date: 11/6/01
Owner or Owner's Designee, Title

### CERTIFICATE OF INSPECTION

I, the undersigned holding a valid commission issued by the National Board of Boiler and Pressure Vessel Inspectors and the State or Province of **California**, and employed by **Factory Mutual Insurance Company** of **Johnston, Rhode Island** have inspected the components described in this Owner's Report during the period 8/9/01 to 11/7/01, and state that to the best of my knowledge and belief, the Owner has performed examinations and taken corrective measures described in this Owner's Report in accordance with the requirements of the ASME Code, Section XI.

By signing this certificate, neither the Inspector nor his employer makes any warranty, expressed or implied, concerning the examinations and corrective measures described in this Owner's Report. Furthermore, neither the Inspector nor his employer shall be liable in any manner for any personal injury or property damage or a loss of any kind arising from or connected with this inspection.

[signature] Commissions 1167 California
Inspector's Signature  National Board, State, Province, and Endorsements

Date MAR 7, 2001

63 mo# 01030424000

WO: 01030424000

# FORM NIS-2 OWNER'S REPORT FOR REPAIRS OR REPLACEMENTS

As Required by the Provisions of the ASME Code Section XI

1. Owner: Southern California Edison Company
2244 Walnut Grove Avenue
Rosemead, California 91770

Unit: 2
CWO: 01030679000
Rspec: GEN-170
PID: 40111A
N5: S2-1201-3

2. Plant: San Onofre Nuclear Generating Station
San Clemente, California 92674-0128

3. Work Performed by: Southern California Edison Company

Type Code Symbol Stamp: N/A
Authorization No: N/A
Expiration Date: N/A

4. Identification of System: Reactor Coolant

5. (a) Applicable Construction Code ASME Section III, Class 1, 1971 Edition, Summer 1971 Addenda (SG); Class 1, 1989 Edition, No Addenda (tube sleeves); Code Case: N-20

5. (b) Applicable Edition of Section XI Utilized for Repairs or Replacements: 1989 Edition, No Addenda

6. Identification of Components Repaired or Replaced and Replacement Component

| Name of Component | Name of Manufacturer | Manufacturer Serial No. | National Board No. | Other Identification | Year Built | Repaired, Replaced or Replacement | ASME Code Stamped Yes/No |
|---|---|---|---|---|---|---|---|
| Steam Generator | ABB Combustion Engineering | 71270-1 | 22218 | S21301ME089P | 1976 | --- | Yes |
| Weld-In Tube Sleeves, hot leg * | Framatome ANP | Ht. #NX9026, Tr. Code G | N/A | RSO-1069-02, SB-163, N06690 | N/A | Repaired/ Replacement | No |

7. Description of Work:

Framatome, a qualified contractor, performed tubesleeving in the steam generator channelheads under the Site ASME Section XI Program. The work group responsible for coordinating and overseeing this work was Project Management and Engineering Support Special Projects (SG/ISI) group. A visual examination (VT-1) of the steam generator tube sleeve welds was performed satisfactorily.

8. Tests Conducted: N/A Pressure: N/A Temp: N/A

Note. Supplemental sheets in the form of lists, sketches, or drawings may be used provided (1) size is 8 1/2 in x 11 in., (2) information in Items 1 through 6 on this report is included on each sheet, (3) each sheet is numbered and the number of sheets is recorded at the top of this form, and (4) each sheet is initialed and dated by the Owner or Owner's designee and the AIA.

# FORM NIS-2 (back)

9. Remarks: None.

(Applicable Manufacturer's Data Reports are available on-site)

## CERTIFICATE OF COMPLIANCE

We certify that the statements made in the report are correct and this **repair and replacement** conforms to the rules of the ASME Code, Section XI.
repair or replacement

Type Code Symbol Stamp: N/A

Certificate of Authorizaton No: N/A  Expiration Date: N/A

Signed: _____ Supervising ASME Codes Engineer Date: 8/15/02
Owner or Owner's Designee, Title

## CERTIFICATE OF INSPECTION

I, the undersigned holding a valid commission issued by the National Board of Boiler and Pressure Vessel Inspectors and the State or Province of **California**, and employed by **Factory Mutual Insurance Company** of **Johnston, Rhode Island** have inspected the components described in this Owner's Report during the period 06/01/02 to 08/16/02, and state that to the best of my knowledge and belief, the Owner has performed examinations and taken corrective measures described in this Owner's Report in accordance with the requirements of the ASME Code, Section XI.

By signing this certificate, neither the Inspector nor his employer makes any warranty, expressed or implied, concerning the examinations and corrective measures described in this Owner's Report. Furthermore, neither the Inspector nor his employer shall be liable in any manner for any personal injury or property damage or a loss of any kind arising from or connected with this inspection.

_____ Commissions 1862 California
Inspector's Signature  National Board, State, Province, and Endorsements

Date Aug. 16, 2002

WO: 01030679000

# FORM NIS-2 OWNER'S REPORT FOR REPAIRS OR REPLACEMENTS

As Required by the Provisions of the ASME Code Section XI

1. Owner: Southern California Edison Company
2244 Walnut Grove Avenue
Rosemead, California 91770

Unit: 2
CWO: 01030777000
Rspec: GEN-170
PID: 40111A
N5: S2-1201-3

2. Plant: San Onofre Nuclear Generating Station
San Clemente, California 92674-0128

3. Work Performed by: Southern California Edison Company

Type Code Symbol Stamp: N/A
Authorization No: N/A
Expiration Date: N/A

4. Identification of System: Reactor Coolant

5. (a) Applicable Construction Code ASME Section III, Class 1, 1971 Edition, Summer 1971 Addenda (SG); Class 1, 1989 Edition, No Addenda (tube sleeves); Code Case: N-20

5. (b) Applicable Edition of Section XI Utilized for Repairs or Replacements: 1989 Edition, No Addenda

6. Identification of Components Repaired or Replaced and Replacement Component

| Name of Component | Name of Manufacturer | Manufacturer Serial No. | National Board No. | Other Identification | Year Built | Repaired, Replaced or Replacement | ASME Code Stamped Yes/No |
|---|---|---|---|---|---|---|---|
| Steam Generator | ABB Combustion Engineering | 71270-2 | 22219 | S21301ME088P | 1976 | — | Yes |
| Weld-In Tube Sleeves, hot leg * | Framatome ANP | Ht. #NX9026, Tr. Code G | N/A | RSO-1069-02, SB-163, N06690 | N/A | Repaired/ Replacement | No |

*** See attached SONGS-2 SLEEVING LIST (REV. 00) S/G 88 May 2002 2C12 (3 pages) for tube locations (row/column) of installed tubesleeves.**

7. Description of Work:

Framatome, a qualified contractor, performed tubesleeving in the steam generator channelheads under the Site ASME Section XI Program. The work group responsible for coordinating and overseeing this work was Project Management and Engineering Support Special Projects (SG/ISI) group. A visual examination (VT-1) of the steam generator tube sleeve welds was performed satisfactorily.

8. Tests Conducted: N/A Pressure: N/A Temp: N/A

Note Supplemental sheets in the form of lists, sketches, or drawings may be used provided (1) size is 8 1/2 in. x 11 in., (2) information in Items 1 through 6 on this report is included on each sheet, (3) each sheet is numbered and the number of sheets is recorded at the top of this form, and (4) each sheet is initialed and dated by the Owner or Owner's designee and the AIA.

# FORM NIS-2 (back)

9. Remarks: None.

(Applicable Manufacturer's Data Reports are available on-site)

## CERTIFICATE OF COMPLIANCE

We certify that the statements made in the report are correct and this **repair and replacement** conforms to the rules of the ASME Code, Section XI.
repair or replacement

Type Code Symbol Stamp: N/A

Certificate of Authorizaton No: N/A

Expiration Date: N/A

Signed: _____ Supervising ASME Codes Engineer Date: 8/15/02
Owner or Owner's Designee, Title

## CERTIFICATE OF INSPECTION

I, the undersigned holding a valid commission issued by the National Board of Boiler and Pressure Vessel Inspectors and the State or Province of **California**, and employed by **Factory Mutual Insurance Company** of **Johnston, Rhode Island** have inspected the components described in this Owner's Report during the period 06/01/02 to 08/16/02, and state that to the best of my knowledge and belief, the Owner has performed examinations and taken corrective measures described in this Owner's Report in accordance with the requirements of the ASME Code, Section XI.

By signing this certificate, neither the Inspector nor his employer makes any warranty, expressed or implied, concerning the examinations and corrective measures described in this Owner's Report. Furthermore, neither the Inspector nor his employer shall be liable in any manner for any personal injury or property damage or a loss of any kind arising from or connected with this inspection.

_____ Commissions 1862 California
Inspector's Signature National Board, State, Province, and Endorsements

Date Aug. 16, 2002

WO: 01030777000

# FORM NIS-2 OWNER'S REPORT FOR REPAIRS OR REPLACEMENTS

As Required by the Provisions of the ASME Code Section XI

1. Owner: Southern California Edison Company
2244 Walnut Grove Avenue
Rosemead, California 91770

Unit: 2
MO: 01040807000
Rspec: GEN-105S
PID: 40141A (F5)
N5: S2-1201-3

2. Plant: San Onofre Nuclear Generating Station
San Clemente, California 92674-012

3. Work Performed by: Southern California Edison Company

Type Code Symbol Stamp: N/A
Authorization No: N/A
Expiration Date: N/A

4. Identification of System: Reactor Coolant

5. (a) Applicable Construction Code: ASME Section III, Class 1, 1971 Edition, Summer 1971 Addenda; Code Case. None

(b) Applicable Edition of Section XI Utilized for Repairs or Replacements: 1989 Edition, No Addenda

6. Identification of Components Repaired or Replaced and Replacement Components:

| Name of Component | Name of Manufacturer | Manufacturer Serial No | National Board No. | Other Identification | Year Built | Repaired, Replaced or Replacement | ASME Code Stamped Yes/No |
|---|---|---|---|---|---|---|---|
| Steam Generator | CE | 71270-1 | 22218 | S21301ME089 | 1976 | — | Yes |
| 1"-8 x 6" Stud (1) | ABB Combustion Engineering | Ht. #85689 | N/A | RSO-2249-91, SA193 B7 (CR-3005-96) | N/A | Replacement | No |
| 1"-8 Hex Nut (1) | ABB Combustion Engineering | Ht. #11472 | N/A | RSO-2249-91, SA193 B7 (CR-2001-93) | N/A | Replacement | No |

7. Description of Work:

Steam generator secondary handhole cover was reinstalled with (1) each in-kind replacement stud (#9) and (1) each in-kind replacement nut (#9).

8. Tests Conducted: System Inservice Pressure Test Pressure: NOP Temp: N/A

See: AR 020100957-27

Note Supplemental sheets in the form of lists, sketches, or drawings may be used provided (1) size is 8 1/2 in x 11 in., (2) information in Items 1 through 6 on this report is included on each sheet, (3) each sheet is numbered and the number of sheets is recorded at the top of this form, and (4) each sheet is initialed and dated by the Owner or Owner's designee and the AIA.

# FORM NIS-2 (back)

9. Remarks: CR-3005-96 reconciles the replacement stud which was certified to ASME III-1, 1974 Edition. Winter 1974 Addenda. CR-2001-93 reconciles the replacement nut which was certified to ASME III-1, 1980 Edition, Summer 1982 Addenda.

(Applicable Manufacturer's Data Reports are available on-site)

## CERTIFICATE OF COMPLIANCE

We certify that the statements made in the report are correct and this **replacement** conforms to the rules of the ASME Code, Section XI.
repair or replacement

Type Code Symbol Stamp: N/A

Certificate of Authorizaton No: N/A

Expiration Date: N/A

Signed: _____ Supervising ASME Codes Engineer Date: 8/5/02
Owner or Owner's Designee, Title

## CERTIFICATE OF INSPECTION

I, the undersigned holding a valid commission issued by the National Board of Boiler and Pressure Vessel Inspectors and the State or Province of **California**, and employed by **Factory Mutual Insurance Company** of **Johnston, Rhode Island** have inspected the components described in this Owner's Report during the period 10/16/01 to 08/06/02, and state that to the best of my knowledge and belief, the Owner has performed examinations and taken corrective measures described in this Owner's Report in accordance with the requirements of the ASME Code, Section XI.

By signing this certificate, neither the Inspector nor his employer makes any warranty, expressed or implied, concerning the examinations and corrective measures described in this Owner's Report. Furthermore, neither the Inspector nor his employer shall be liable in any manner for any personal injury or property damage or a loss of any kind arising from or connected with this inspection.

_____ Commissions 1862 California
Inspector's Signature National Board, State, Province, and Endorsements

Date Aug. 6, 2002

WO: 01040807000

# FORM NIS-2 OWNER'S REPORT FOR REPAIRS OR REPLACEMENTS

As Required by the Provisions of the ASME Code Section XI

1. Owner: Southern California Edison Company
2244 Walnut Grove Avenue
Rosemead, California 91770

Unit: 2
MO: 01040817000
Rspec: GEN-105S
PID: 40141A (C5)
N5: S2-1201-3

2. Plant: San Onofre Nuclear Generating Station
San Clemente, California 92674-0128

3. Work Performed by: Southern California Edison Company

Type Code Symbol Stamp: N/A
Authorization No: N/A
Expiration Date: N/A

4. Identification of System: Reactor Coolant

5. (a) Applicable Construction Code: ASME Section III, Class 1, 1971 Edition, Summer 1971 Addenda; Code Case: None

(b) Applicable Edition of Section XI Utilized for Repairs or Replacements: 1989 Edition, No Addenda

6. Identification of Components Repaired or Replaced and Replacement Components:

| Name of Component | Name of Manufacturer | Manufacturer Serial No. | National Board No. | Other Identification | Year Built | Repaired, Replaced or Replacement | ASME Code Stamped Yes/No |
|---|---|---|---|---|---|---|---|
| Steam Generator | CE | 71270-2 | 22219 | S21301ME088 | 1976 | — | Yes |
| 1 1/2"-8 x 9" Stud (3) | Nova Machine Products | Ht. #78055, Tr. Code NPA | N/A | RSO-1431-99, SA540 B24 Cl. 3 | N/A | Replacement | No |
| 1 1/2"-8 Nut (2) | Nova Machine Products | Ht. #73265-32-2, Ht. Code RZW | N/A | RSO-1076-00, SA193 B7 | N/A | Replacement | No |
| 1 1/2"-8 Nut (1) | Allied Group | Ht. #M71482 H567, Tr. Code A77 | N/A | RSO-0014-99, SA193 B7 | N/A | Replacement | No |

7. Description of Work:

Replaced bolting on steam generator (S21301ME088) secondary manway cover. (3) each 1 1/2" x 9" manway studs were replaced with in-kind replacement studs (hole #2, 5, & 8), and (3) each 1 1/2"-8 manway nuts were replaced with in-kind replacement nuts (hole #2, 5, & 8) in accordance with Repair Specification GEN-105s.

8. Tests Conducted: System Inservice Pressure Test Pressure: NOP Temp: N/A

See: AR 020100957-26

Note: Supplemental sheets in the form of lists, sketches, or drawings may be used provided (1) size is 8 1/2 in x 11 in., (2) information in Items 1 through 6 on this report is included on each sheet, (3) each sheet is numbered and the number of sheets is recorded at the top of this form, and (4) each sheet is initialed and dated by the Owner or Owner's designee and the AIA.

# FORM NIS-2 (back)

9. Remarks: None.

(Applicable Manufacturer's Data Reports are available on-site)

## CERTIFICATE OF COMPLIANCE

We certify that the statements made in the report are correct and this **replacement** conforms to the rules of the ASME Code, Section XI.
repair or replacement

Type Code Symbol Stamp: N/A

Certificate of Authorizaton No: N/A  Expiration Date: N/A

Signed: [signature] Supervising ASME Codes Engineer Date: 7/17/02
Owner or Owner's Designee, Title

## CERTIFICATE OF INSPECTION

I, the undersigned holding a valid commission issued by the National Board of Boiler and Pressure Vessel Inspectors and the State or Province of **California**, and employed by **Factory Mutual Insurance Company** of **Johnston, Rhode Island** have inspected the components described in this Owner's Report during the period 10/16/01 ~~07/02~~-07/17/02, and state that to the best of my knowledge and belief, the Owner has performed examinations and taken corrective measures described in this Owner's Report in accordance with the requirements of the ASME Code, Section XI.

By signing this certificate, neither the Inspector nor his employer makes any warranty, expressed or implied, concerning the examinations and corrective measures described in this Owner's Report. Furthermore, neither the Inspector nor his employer shall be liable in any manner for any personal injury or property damage or a loss of any kind arising from or connected with this inspection.

[signature] Commissions 1862 California
Inspector's Signature  National Board, State, Province, and Endorsements

Date July 17, 2002

WO: 01040817000

# FORM NIS-2 OWNER'S REPORT FOR REPAIRS OR REPLACEMENTS

As Required by the Provisions of the ASME Code Section XI

1. Owner: Southern California Edison Company
2244 Walnut Grove Avenue
Rosemead, California 91770

Unit: 2
MO: 01041056000
Rspec: 001000182-10
PID: N/A
N5: N/A

2. Plant: San Onofre Nuclear Generating Station
San Clemente, California 92674-0128

3. Work Performed by: Southern California Edison Company

Type Code Symbol Stamp: N/A
Authorization No: N/A
Expiration Date: N/A

4. Identification of System: Containment Structure

5. (a) Applicable Construction Code: ASME Section III-Subsection NE for Class MC Components, 1971 Edition, W.'72 Addenda; Code Case: None

5. (b) Applicable Edition of Section XI Utilized for Repairs or Replacements: 1992 Edition, 1992 Addenda

6. Identification of Components Repaired or Replaced and Replacement Components:

| Name of Component | Name of Manufacturer | Manufacturer Serial No. | National Board No. | Other Identification | Year Built | Repaired, Replaced or Replacement | ASME Code Stamped Yes/No |
|---|---|---|---|---|---|---|---|
| Containment Equipment Hatch | Chicago Bridge & Iron | — | N/A | 2C501 | N/A | Repaired | Yes |
| 1/8" Hex Head Pipe Plug * | Nova Machine Products | S/N 3, Ht. #M59356, Ht. Code GAT | N/A | RSO-1241-97, SA105 | N/A | Replacement (1" & less) | Yes |

7. Description of Work:

Installed a new LLRT pressure test tap on the Unit 2 Containment Equipment Hatch by drilling and tapping to the configuration identified in the machine details of drawing SO23-205-5-150 and Stress Report SO23-205-5-864, sht. E2. All work was performed in accordance with Repair Specification 001000182-10. *(Note: 1/8" pipe plug was installed after drilling)

8. Tests Conducted: System Leakage Pressure Test Pressure: NOP Temp: NOT

VT-2 performed per Procedure SO23-3-3.51.1

Note: Supplemental sheets in the form of lists, sketches, or drawings may be used provided (1) size is 8 1/2 in x 11 in., (2) information in Items 1 through 6 on this report is included on each sheet, (3) each sheet is numbered and the number of sheets is recorded at the top of this form, and (4) each sheet is initialed and dated by the Owner or Owner's designee and the AIA.

## FORM NIS-2 (back)

9. Remarks: None.

(Applicable Manufacturer's Data Reports are available on-site)

### CERTIFICATE OF COMPLIANCE

We certify that the statements made in the report are correct and this **repair** conforms to the rules of the ASME Code, Section XI.
repair or replacement

Type Code Symbol Stamp: N/A

Certificate of Authorizaton No: N/A  Expiration Date: N/A

Signed: _____ Supervising ASME Codes Engineer Date: 8/8/02
Owner or Owner's Designee, Title

### CERTIFICATE OF INSPECTION

I, the undersigned holding a valid commission issued by the National Board of Boiler and Pressure Vessel Inspectors and the State or Province of **California**, and employed by **Factory Mutual Insurance Company** of **Johnston, Rhode Island** have inspected the components described in this Owner's Report during the period 04/24/02 to 08/09/02, and state that to the best of my knowledge and belief, the Owner has performed examinations and taken corrective measures described in this Owner's Report in accordance with the requirements of the ASME Code, Section XI.

By signing this certificate, neither the Inspector nor his employer makes any warranty, expressed or implied, concerning the examinations and corrective measures described in this Owner's Report. Furthermore, neither the Inspector nor his employer shall be liable in any manner for any personal injury or property damage or a loss of any kind arising from or connected with this inspection.

_____ Commissions 1862 California
Inspector's Signature  National Board, State, Province, and Endorsements

Date Aug. 9, 2002

WO: 01041056000

# FORM NIS-2 OWNER'S REPORT FOR REPAIRS OR REPLACEMENTS

As Required by the Provisions of the ASME Code Section XI

1. Owner: Southern California Edison Company
2244 Walnut Grove Avenue
Rosemead, California 91770

Unit: 2
MO: 01050151000
Rspec: ASME SECTION XI DATA-0173
PID: 40111B (G5)
N5: S2-1201-2

2. Plant: San Onofre Nuclear Generating Station
San Clemente, California 92674-0128

3. Work Performed by: Southern California Edison Company

Type Code Symbol Stamp: N/A
Authorization No: N/A
Expiration Date: N/A

4. Identification of System: Reactor Coolant

5. (a) Applicable Construction Code: ASME Section III, Class 1, 1974 Edition, No Addenda (Valve); 1974 Edition, S.'74 Add. (Inlet Bolting); Code Case: None

5. (b) Applicable Edition of Section XI Utilized for Repairs or Replacements: 1989 Edition, No Addenda

6. Identification of Components Repaired or Replaced and Replacement Components:

| Name of Component | Name of Manufacturer | Manufacturer Serial No. | National Board No. | Other Identification | Year Built | Repaired, Replaced or Replacement | ASME Code Stamped Yes/No |
|---|---|---|---|---|---|---|---|
| 6" x 8" Pressurizer Safety Valve | Dresser | BS-03209 | N/A | 2PSV0200 | 1978 | Replaced | Yes |
| 6" x 8" Pressurizer Safety Valve | Dresser | BS-03210 | N/A | RSO-2002-01, Tested Spare | 1978 | Replacement | Yes |
| 2" x 14 1/2" All-Thread Stud (7) | Nova Machine Products | Ht. #83633, Ht. Code LPP | N/A | RSO-0146-99, SA193 B7 | N/A | Replacement | No |
| 2" x 14 1/2" All-Thread Stud (1) | Nova Machine Products | Ht. #96517, Ht. Code FKE | N/A | RSO-0998-97, SA193 B7 | N/A | Replacement | No |
| 2"-8 Heavy Hex Nut (16) | Nova Machine Products | Ht. #78203, Ht. Code JBX | N/A | RSO-0056-99, SA194 Gr.7 | N/A | Replacement | No |

7. Description of Work:

Replaced the pressurizer safety valve (s/n BS-03209) in plant location 2PSV0200 with a rebuilt and set-point tested spare valve (s/n BS-03210). Replaced the inlet flange bolting with in-kind replacement bolting (8) each studs and (16) each nuts. A VT-1 examination was performed on the replacement bolting and a VT-3 examination was performed on the internal surfaces of the replacement valve body with satisfactory results. The removed valve was placed into the rebuild program.

8. Tests Conducted: System Leakage Pressure Test Pressure: NOP Temp: NOT

VT-2 performed per Procedure SO23-XVII-3.1.1

Note Supplemental sheets in the form of lists, sketches, or drawings may be used provided (1) size is 8 1/2 in. x 11 in., (2) information in Items 1 through 6 on this report is included on each sheet, (3) each sheet is numbered and the number of sheets is recorded at the top of this form, and (4) each sheet is initialed and dated by the Owner or Owner's designee and the AIA.

# FORM NIS-2 (back)

9. Remarks: None.

(Applicable Manufacturer's Data Reports are available on-site)

## CERTIFICATE OF COMPLIANCE

We certify that the statements made in the report are correct and this **replacement** conforms to the rules of the ASME Code, Section XI.
repair or replacement

Type Code Symbol Stamp: N/A

Certificate of Authorizaton No: N/A  Expiration Date: N/A

Signed: _____ Supervising ASME Codes Engineer Date: 8/5/02
Owner or Owner's Designee, Title

## CERTIFICATE OF INSPECTION

I, the undersigned holding a valid commission issued by the National Board of Boiler and Pressure Vessel Inspectors and the State or Province of **California**, and employed by **Factory Mutual Insurance Company** of **Johnston, Rhode Island** have inspected the components described in this Owner's Report during the period 03/08/02 to 08/06/02, and state that to the best of my knowledge and belief, the Owner has performed examinations and taken corrective measures described in this Owner's Report in accordance with the requirements of the ASME Code, Section XI.

By signing this certificate, neither the Inspector nor his employer makes any warranty, expressed or implied, concerning the examinations and corrective measures described in this Owner's Report. Furthermore, neither the Inspector nor his employer shall be liable in any manner for any personal injury or property damage or a loss of any kind arising from or connected with this inspection.

_____ Commissions 1862 California
Inspector's Signature  National Board, State, Province, and Endorsements

Date Aug. 6, 2002

WO: 01050151000

# FORM NIS-2 OWNER'S REPORT FOR REPAIRS OR REPLACEMENTS

As Required by the Provisions of the ASME Code Section XI

1. Owner: Southern California Edison Company
2244 Walnut Grove Avenue
Rosemead, California 91770

Unit: 2
MO: 01050186000
Rspec: ASME SECTION XI DATA-0173
PID: 40111B (G7)
N5: S2-1201-2

2. Plant: San Onofre Nuclear Generating Station
San Clemente, California 92674-012

3. Work Performed by: Southern California Edison Company

Type Code Symbol Stamp: N/A
Authorization No: N/A
Expiration Date: N/A

4. Identification of System: Reactor Coolant

5. (a) Applicable Construction Code ASME Section III, Class 1, 1974 Edition, No Addenda (Valve); 1974 Edition, S '74 Add. (Inlet Bolting); Code Case: None

5. (b) Applicable Edition of Section XI Utilized for Repairs or Replacements: 1989 Edition, No Addenda

6. Identification of Components Repaired or Replaced and Replacement Components:

| Name of Component | Name of Manufacturer | Manufacturer Serial No. | National Board No. | Other Identification | Year Built | Repaired, Replaced or Replacement | ASME Code Stamped Yes/No |
|---|---|---|---|---|---|---|---|
| 6" x 8" Pressurizer Safety Valve | Dresser | BU-06254 | N/A | 2PSV0201 | 1980 | Replaced | Yes |
| 6" x 8" Pressurizer Safety Valve | Dresser | BS-03211 | N/A | RSO-2002-01, Tested Spare | 1978 | Replacement | Yes |
| 2" x 14 1/2" All-Thread Stud (3) | Nova Machine Products | Ht. #83633, Ht. Code LPP | N/A | RSO-0146-99, SA193 B7 | N/A | Replacement | No |
| 2" x 14 1/2" All-Thread Stud (5) | Nova Machine Products | Ht. #96517, Ht. Code FKE | N/A | RSO-0998-97, SA193 B7 | N/A | Replacement | No |
| 2"-8 Heavy Hex Nut (15) | Nova Machine Products | Ht. #78203, Ht. Code JBX | N/A | RSO-0056-99, SA194 Gr.7 | N/A | Replacement | No |
| 2"-8 Heavy Hex Nut (1) | Nova Machine Products | Ht. #95335, Ht. Code FHZ | N/A | RSO-0904-97, SA194 Gr.7 | N/A | Replacement | No |

7. Description of Work:

Replaced the pressurizer safety valve (s/n BU-06254) in plant location 2PSV0201 with a rebuilt and set-point tested spare valve (s/n BS-03211). Replaced the inlet flange bolting with in-kind replacement bolting (8) each studs and (16) each nuts. A VT-1 examination was performed on the replacement bolting and a VT-3 examination was performed on the internal surfaces of the replacement valve body with satisfactory results. The removed valve was placed into the rebuild program.

8. Tests Conducted: System Leakage Pressure Test Pressure: NOP Temp: NOT

**VT-2 performed per Procedure SO23-XVII-3.1.**

Note: Supplemental sheets in the form of lists, sketches, or drawings may be used provided (1) size is 8 1/2 in. x 11 in., (2) information in Items 1 through 6 on this report is included on each sheet, (3) each sheet is numbered and the number of sheets is recorded at the top of this form, and (4) each sheet is initialed and dated by the Owner or Owner's designee and the AIA.

# FORM NIS-2 (back)

9. Remarks:

(Applicable Manufacturer's Data Reports are available on-site)

## CERTIFICATE OF COMPLIANCE

We certify that the statements made in the report are correct and this repair or replacement conforms to the rules of the ASME Code, Section XI.

Type Code Symbol Stamp: N/A

Certificate of Authorizaton No: N/A Expiration Date: N/A

Signed: [signature] Supervising ASME Codes Engineer Date: 8/5/02
Owner or Owner's Designee, Title

## CERTIFICATE OF INSPECTION

I, the undersigned holding a valid commission issued by the National Board of Boiler and Pressure Vessel Inspectors and the State or Province of **California**, and employed by **Factory Mutual Insurance Company** of **Johnston, Rhode Island** have inspected the components described in this Owner's Report during the period 07/18/02 to 08/06/02, and state that to the best of my knowledge and belief, the Owner has performed examinations and taken corrective measures described in this Owner's Report in accordance with the requirements of the ASME Code, Section XI.

By signing this certificate, neither the Inspector nor his employer makes any warranty, expressed or implied, concerning the examinations and corrective measures described in this Owner's Report. Furthermore, neither the Inspector nor his employer shall be liable in any manner for any personal injury or property damage or a loss of any kind arising from or connected with this inspection.

[signature] Commissions 1862 California
Inspector's Signature National Board, State, Province, and Endorsements

Date Aug. 6, 2002

WO

# FORM NIS-2 OWNER'S REPORT FOR REPAIRS OR REPLACEMENTS

As Required by the Provisions of the ASME Code Section XI

1. Owner: Southern California Edison Company
2244 Walnut Grove Avenue
Rosemead, California 91770

Unit: 2
MO: 01050208000
Rspec: ASME SECTION XI DATA-0187
PID: 40141D (G6)
N5: S2-1301-1

2. Plant: San Onofre Nuclear Generating Station
San Clemente, California 92674-012

3. Work Performed by: Southern California Edison Company

Type Code Symbol Stamp: N/A
Authorization No: N/A
Expiration Date: N/A

4. Identification of System: Main Steam

5. (a) Applicable Construction Code: ASME Section III, Class 2, 1974 Edition, S '74 Edition; Code Case: None

(b) Applicable Edition of Section XI Utilized for Repairs or Replacements: 1989 Edition, No Addenda

6. Identification of Components Repaired or Replaced and Replacement Components:

| Name of Component | Name of Manufacturer | Manufacturer Serial No. | National Board No. | Other Identification | Year Built | Repaired, Replaced or Replacement | ASME Code Stamped Yes/No |
|---|---|---|---|---|---|---|---|
| 6"x 10" Main Steam Safety Valve | Crosby Valve & Gage | N58737-01-0003 | N/A | 2PSV8403 | 1976 | Replaced | Yes |
| 6"x 10" Main Steam Safety Valve | Crosby Valve & Gage | N58737-01-0001 | N/A | RSO-1560-01 (Rebuilt Valve) | 1976 | Replacement | Yes |
| 1 3/8" x 9" Inlet Studs (12) | Mackson, Inc. | Ht. #4909848, Trace #1VK | N/A | Fabbed on MO 01010806 | N/A | Replacement | No |
| 1 3/8"- 8 Inlet Nuts (12) | Mackson, Inc. | Ht. #M82952, Ht. Code AGQ | N/A | RSO-0530-02, SA194 Gr.7 (SEE-92-0065, CR-3004-96) | N/A | Replacement | No |

7. Description of Work:

The main steam safety valve located in plant position 2PSV8403 (s/n N58737-01-0003) was replaced as a scheduled preventative maintenance action with a spare valve (s/n N58737-01-0001) which had been returned to the vendor for rework and testing. The inlet bolting was also replaced. (12) each studs and (12) each nuts were replaced (the studs were manufactured on MO 01010806). The removed valve was placed into the rebuild program to be rebuilt under MO 01110256 .

8. Tests Conducted: System Functional Pressure Test Pressure: NOP Temp: N/A

See: AR 020100957-16

Note: Supplemental sheets in the form of lists, sketches, or drawings may be used provided (1) size is 8 1/2 in. x 11 in., (2) information in Items 1 through 6 on this report is included on each sheet, (3) each sheet is numbered and the number of sheets is recorded at the top of this form, and (4) each sheet is initialed and dated by the Owner or Owner's designee and the AIA.

## FORM NIS-2 (back)

9. Remarks: CR-3004-96 reconciles the replacement nuts which were certified to ASME III-2, 1989 Ed.; No Add. (Reference: SEE 92-0065). CR-3005-96 reconciles the replacement studs which were certified to ASME III-2, 1989 Ed; No Add

(Applicable Manufacturer's Data Reports are available on-site)

### CERTIFICATE OF COMPLIANCE

We certify that the statements made in the report are correct and this **replacement** conforms to the rules of the ASME Code, Section XI.
repair or replacement

Type Code Symbol Stamp: N/A

Certificate of Authorizaton No: N/A  Expiration Date: N/A

Signed: [signature] Supervising ASME Codes Engineer Date: 8/5/02
Owner or Owner's Designee, Title

### CERTIFICATE OF INSPECTION

I, the undersigned holding a valid commission issued by the National Board of Boiler and Pressure Vessel Inspectors and the State or Province of **California**, and employed by **Factory Mutual Insurance Company** of **Johnston, Rhode Island** have inspected the components described in this Owner's Report during the period 03/01/02 to 08/06/02, and state that to the best of my knowledge and belief, the Owner has performed examinations and taken corrective measures described in this Owner's Report in accordance with the requirements of the ASME Code, Section XI.

By signing this certificate, neither the Inspector nor his employer makes any warranty, expressed or implied, concerning the examinations and corrective measures described in this Owner's Report. Furthermore, neither the Inspector nor his employer shall be liable in any manner for any personal injury or property damage or a loss of any kind arising from or connected with this inspection.

[signature] Commissions 1862 California
Inspector's Signature  National Board, State, Province, and Endorsements

Date Aug. 6, 2002

WO- 01050208000

# FORM NIS-2 OWNER'S REPORT FOR REPAIRS OR REPLACEMENTS

As Required by the Provisions of the ASME Code Section XI

1. Owner: Southern California Edison Company
2244 Walnut Grove Avenue
Rosemead, California 91770

Unit: 2
MO: 01050241000
Rspec: ASME SECTION XI DATA-0193
PID: 40141D (F5)
N5: S2-1301-1

2. Plant: San Onofre Nuclear Generating Station
San Clemente, California 92674-012

3. Work Performed by: Southern California Edison Company

Type Code Symbol Stamp: N/A
Authorization No: N/A
Expiration Date: N/A

4. Identification of System: Main Steam

5. (a) Applicable Construction Code: ASME Section III, Class 2, 1974 Edition, S.'74 Edition; Code Case: None

(b) Applicable Edition of Section XI Utilized for Repairs or Replacements: 1989 Edition, No Addenda

6. Identification of Components Repaired or Replaced and Replacement Components:

| Name of Component | Name of Manufacturer | Manufacturer Serial No. | National Board No. | Other Identification | Year Built | Repaired, Replaced or Replacement | ASME Code Stamped Yes/No |
|---|---|---|---|---|---|---|---|
| 6"x 10" Main Steam Safety Valve | Crosby Valve & Gage | N58737-01-0011 | N/A | 2PSV8409 (to be rebuilt on MO 01110259) | 1976 | Replaced | Yes |
| 6"x 10" Main Steam Safety Valve | Crosby Valve & Gage | N58737-01-0007 | N/A | RSO-1560-01 (Rebuilt valve) | 1976 | Replacement | Yes |
| 1 3/8" x 9" Inlet Studs (12) | Nova Machine Products | Ht. #28007, Ht. Code NPN | N/A | Fabbed on MO 01010806 | N/A | Replacement | No |
| 1 3/8"- 8 Inlet Nuts (10) | Nova Machine Products | Ht. #10150, Ht. Code RKW | N/A | RSO-0916-00, SA194 Gr.7 (SEE-92-0065, CR-3004-96) | N/A | Replacement | No |
| 1 3/8"- 8 Inlet Nuts (2) | Nova Machine Products | Ht. #69161, Ht. Code LUW | N/A | RSO-0234-99, SA194 Gr.7 (SEE-92-0065, CR-3004-96) | N/A | Replacement | No |

7. Description of Work:

The main steam safety valve located in plant position 2PSV8409 (s/n N58737-01-0011) was replaced as a scheduled preventative maintenance action with a spare valve (s/n N58737-01-0007) which had been returned to the vendor for rework and testing. The inlet bolting was also replaced. (12) each studs and (12) each nuts were replaced (the studs were manufactured on MO 01010806). The removed valve was placed into the rebuild program to be rebuilt under MO 01110259.

8. Tests Conducted: System Functional Pressure Test Pressure: NOP Temp: N/A
See: AR 020100957-18

Note: Supplemental sheets in the form of lists, sketches, or drawings may be used provided (1) size is 8 1/2 in. x 11 in., (2) information in Items 1 through 6 on this report is included on each sheet, (3) each sheet is numbered and the number of sheets is recorded at the top of this form, and (4) each sheet is initialed and dated by the Owner or Owner's designee and the AIA.

## FORM NIS-2 (back)

9. Remarks: CR-3004-96 reconciles the replacement nuts which were certified to ASME III-2, 1989 Ed., No Add. (Reference: SEE 92-0065). CR-3005-96 reconciles the replacement studs which were certified to ASME III-2, 1989 Ed; No Add.

(Applicable Manufacturer's Data Reports are available on-site)

### CERTIFICATE OF COMPLIANCE

We certify that the statements made in the report are correct and this **replacement** conforms to the rules of the ASME Code, Section XI.
repair or replacement

Type Code Symbol Stamp: N/A

Certificate of Authorizaton No: N/A  Expiration Date: N/A

Signed: [signature] Supervising ASME Codes Engineer Date: 8/5/02
Owner or Owner's Designee, Title

### CERTIFICATE OF INSPECTION

I, the undersigned holding a valid commission issued by the National Board of Boiler and Pressure Vessel Inspectors and the State or Province of **California**, and employed by **Factory Mutual Insurance Company** of **Johnston, Rhode Island** have inspected the components described in this Owner's Report during the period 04/09/02 to 08/06/02, and state that to the best of my knowledge and belief, the Owner has performed examinations and taken corrective measures described in this Owner's Report in accordance with the requirements of the ASME Code, Section XI.

By signing this certificate, neither the Inspector nor his employer makes any warranty, expressed or implied, concerning the examinations and corrective measures described in this Owner's Report. Furthermore, neither the Inspector nor his employer shall be liable in any manner for any personal injury or property damage or a loss of any kind arising from or connected with this inspection.

[signature] Commissions 1862 California
Inspector's Signature  National Board, State, Province, and Endorsements

Date Aug. 6, 2001

WO 01050241000

# FORM NIS-2 OWNER'S REPORT FOR REPAIRS OR REPLACEMENTS

As Required by the Provisions of the ASME Code Section XI

1. Owner: Southern California Edison Company
2244 Walnut Grove Avenue
Rosemead, California 91770

Unit: 2
MO: 01050245000
Rspec: ASME SECTION XI DATA-0185
PID: 4014C (G7)
N5: S2-1301-2

2. Plant: San Onofre Nuclear Generating Station
San Clemente, California 92674-012

3. Work Performed by: Southern California Edison Company

Type Code Symbol Stamp: N/A
Authorization No: N/A
Expiration Date: N/A

4. Identification of System: Main Steam

5. (a) Applicable Construction Code: ASME Section III, Class 2, 1974 Edition, S.'74 Edition; Code Case: None

(b) Applicable Edition of Section XI Utilized for Repairs or Replacements: 1989 Edition, No Addenda

6. Identification of Components Repaired or Replaced and Replacement Components:

| Name of Component | Name of Manufacturer | Manufacturer Serial No. | National Board No. | Other Identification | Year Built | Repaired, Replaced or Replacement | ASME Code Stamped Yes/No |
|---|---|---|---|---|---|---|---|
| 6"x 10" Main Steam Safety Valve | Crosby Valve & Gage | N58737-01-0002 | N/A | 2PSV8410 (to be rebuilt on MO 01110274) | 1976 | Replaced | Yes |
| 6"x 10" Main Steam Safety Valve | Crosby Valve & Gage | N58737-01-0037 | N/A | RSO-1560-01 (Rebuilt valve) | 1984 | Replacement | Yes |
| 1 1/8" x 4 3/4" Bonnet Studs (6) | Crosby Valve & Gage | Ht. # 8990953, Trace #BF | N/A | RSO-1560-01, SA193 B7 | N/A | Replacement | No |
| 1 3/8" x 9" Inlet Studs (12) | Mackson, Inc. | Ht. #4909848, Trace #1VK | N/A | Fabbed on MO 01010806 | N/A | Replacement | No |
| 1 3/8"- 8 Inlet Nuts (12) | Nova Machine Products | Ht. #69161, Ht. Code LUW | N/A | RSO-0234-99, SA194 Gr.7 (SEE-92-0065, CR-3004-96) | N/A | Replacement | No |

7. Description of Work:

The main steam safety valve located in plant position 2PSV8410 (s/n N58737-01-0002) was replaced as a scheduled preventative maintenance action with a spare valve (s/n N58737-01-0037) which had been returned to the vendor for rework and testing (6 each bonnet studs were also replaced by Crosby on RSO-1560-01). The inlet bolting also required replacement. (12) each studs and (12) each nuts were replaced (the studs were manufactured on MO 01010806). The removed valve was placed into the rebuild program to be rebuilt under MO 01110274.

8. Tests Conducted: System Functional Pressure Test Pressure: NOP Temp: N/A
See: AR 020100957-19

Note: Supplemental sheets in the form of lists, sketches, or drawings may be used provided (1) size is 8 1/2 in. x 11 in., (2) information in Items 1 through 6 on this report is included on each sheet, (3) each sheet is numbered and the number of sheets is recorded at the top of this form, and (4) each sheet is initialed and dated by the Owner or Owner's designee and the AIA.

## FORM NIS-2 (back)

9. Remarks: CR-3004-96 reconciles the replacement nuts which were certified to ASME III-2, 1989 Ed.; No Add. (Reference: SEE 92-0065). CR-3005-96 reconciles the replacement studs which were certified to ASME III-2, 1989 Ed; No Add.

(Applicable Manufacturer's Data Reports are available on-site)

### CERTIFICATE OF COMPLIANCE

We certify that the statements made in the report are correct and this **replacement** conforms to the rules of the ASME Code, Section XI.
repair or replacement

Type Code Symbol Stamp: N/A

Certificate of Authorizaton No: N/A  Expiration Date: N/A

Signed: [signature] Supervising ASME Codes Engineer Date: 8/5/02
Owner or Owner's Designee, Title

### CERTIFICATE OF INSPECTION

I, the undersigned holding a valid commission issued by the National Board of Boiler and Pressure Vessel Inspectors and the State or Province of **California**, and employed by **Factory Mutual Insurance Company** of **Johnston, Rhode Island** have inspected the components described in this Owner's Report during the period 04/09/02 to 08/06/02, and state that to the best of my knowledge and belief, the Owner has performed examinations and taken corrective measures described in this Owner's Report in accordance with the requirements of the ASME Code, Section XI.

By signing this certificate, neither the Inspector nor his employer makes any warranty, expressed or implied, concerning the examinations and corrective measures described in this Owner's Report. Furthermore, neither the Inspector nor his employer shall be liable in any manner for any personal injury or property damage or a loss of any kind arising from or connected with this inspection.

[signature] Commissions 1862 California
Inspector's Signature  National Board, State, Province, and Endorsements

Date Aug. 6, 2002

WO 01050245000

# FORM NIS-2 OWNER'S REPORT FOR REPAIRS OR REPLACEMENTS

As Required by the Provisions of the ASME Code Section XI

1. Owner: Southern California Edison Company
2244 Walnut Grove Avenue
Rosemead, California 91770

Unit: 2
MO: 01050249000
Rspec: ASME SECTION XI DATA-0187
PID: 4014C (G6)
N5: S2-1301-2

2. Plant: San Onofre Nuclear Generating Station
San Clemente, California 92674-012

3. Work Performed by: Southern California Edison Company

Type Code Symbol Stamp: N/A
Authorization No: N/A
Expiration Date: N/A

4. Identification of System: Main Steam

5. (a) Applicable Construction Code: ASME Section III, Class 2, 1974 Edition, S.'74 Edition; Code Case: None

(b) Applicable Edition of Section XI Utilized for Repairs or Replacements: 1989 Edition, No Addenda

6. Identification of Components Repaired or Replaced and Replacement Components:

| Name of Component | Name of Manufacturer | Manufacturer Serial No. | National Board No. | Other Identification | Year Built | Repaired, Replaced or Replacement | ASME Code Stamped Yes/No |
|---|---|---|---|---|---|---|---|
| 6"x 10" Main Steam Safety Valve | Crosby Valve & Gage | N58737-01-0023 | N/A | 2PSV8412 (to be rebuilt on MO 01110296) | 1978 | Replaced | Yes |
| 6"x 10" Main Steam Safety Valve | Crosby Valve & Gage | N58737-01-0020 | N/A | RSO-1560-01 (Rebuilt valve) | 1977 | Replacement | Yes |
| 1 3/8" x 9" Inlet Studs (12) | Mackson, Inc | Ht. #4909848, Trace #1VK | N/A | Fabbed on MO 01010806 | N/A | Replacement | No |
| 1 3/8"- 8 Inlet Nuts (10) | Nova Machine Products | Ht. #10150, Ht. Code RKW | N/A | RSO-0916-00, SA194 Gr.7 (SEE-92-0065, CR-3004-96) | N/A | Replacement | No |
| 1 3/8"- 8 Inlet Nuts (2) | Nova Machine Products | Ht. #69161, Ht. Code LUW | N/A | RSO-0234-99, SA194 Gr.7 (SEE-92-0065, CR-3004-96) | N/A | Replacement | No |

7. Description of Work:

The main steam safety valve located in plant position 2PSV8412 (s/n N58737-01-0023) was replaced as a scheduled preventative maintenance action with a spare valve (s/n N58737-01-0020) which had been returned to the vendor for rework and testing. The inlet bolting was also replaced. (12) each studs and (12) each nuts were replaced (the studs were manufactured on MO 01010806). The removed valve was placed into the rebuild program to be rebuilt under MO 01110296 .

8. Tests Conducted: System Functional Pressure Test Pressure: NOP Temp: N/A

See: AR 020100957-20

Note Supplemental sheets in the form of lists, sketches, or drawings may be used provided (1) size is 8 1/2 in x 11 in., (2) information in Items 1 through 6 on this report is included on each sheet, (3) each sheet is numbered and the number of sheets is recorded at the top of this form, and (4) each sheet is initialed and dated by the Owner or Owner's designee and the AIA.

# FORM NIS-2 (back)

9. Remarks: CR-3004-96 reconciles the replacement nuts which were certified to ASME III-2, 1989 Ed.; No Add. (Reference: SEE 92-0065). CR-3005-96 reconciles the replacement studs which were certified to ASME III-2, 1989 Ed; No Add.

(Applicable Manufacturer's Data Reports are available on-site)

## CERTIFICATE OF COMPLIANCE

We certify that the statements made in the report are correct and this **replacement** conforms to the rules of the ASME Code, Section XI.
repair or replacement

Type Code Symbol Stamp: N/A

Certificate of Authorizaton No: N/A  Expiration Date: N/A

Signed: [signature] Supervising ASME Codes Engineer Date: 8/5/02
Owner or Owner's Designee, Title

## CERTIFICATE OF INSPECTION

I, the undersigned holding a valid commission issued by the National Board of Boiler and Pressure Vessel Inspectors and the State or Province of **California**, and employed by **Factory Mutual Insurance Company** of **Johnston, Rhode Island** have inspected the components described in this Owner's Report during the period 04/09/02 to 08/06/02, and state that to the best of my knowledge and belief, the Owner has performed examinations and taken corrective measures described in this Owner's Report in accordance with the requirements of the ASME Code, Section XI.

By signing this certificate, neither the Inspector nor his employer makes any warranty, expressed or implied, concerning the examinations and corrective measures described in this Owner's Report. Furthermore, neither the Inspector nor his employer shall be liable in any manner for any personal injury or property damage or a loss of any kind arising from or connected with this inspection.

[signature] Commissions 1862 California
Inspector's Signature  National Board, State, Province, and Endorsements

Date Aug. 6, 2002

WO 01050249000

# FORM NIS-2 OWNER'S REPORT FOR REPAIRS OR REPLACEMENTS

As Required by the Provisions of the ASME Code Section XI

1. Owner: Southern California Edison Company
2244 Walnut Grove Avenue
Rosemead, California 91770

Unit: 2
MO: 01050262000
Rspec: ASME SECTION XI DATA-0192
PID: 40141C (G3)
N5: S2-1301-2

2. Plant: San Onofre Nuclear Generating Station
San Clemente, California 92674-012

3. Work Performed by: Southern California Edison Company

Type Code Symbol Stamp: N/A
Authorization No: N/A
Expiration Date: N/A

4. Identification of System: Main Steam

5. (a) Applicable Construction Code: ASME Section III, Class 2, 1974 Edition, S '74 Edition; Code Case: None

(b) Applicable Edition of Section XI Utilized for Repairs or Replacements: 1989 Edition, No Addenda

6. Identification of Components Repaired or Replaced and Replacement Components:

| Name of Component | Name of Manufacturer | Manufacturer Serial No. | National Board No. | Other Identification | Year Built | Repaired, Replaced or Replacement | ASME Code Stamped Yes/No |
|---|---|---|---|---|---|---|---|
| 6"x 10" Main Steam Safety Valve | Crosby Valve & Gage | N58737-00-0006 | N/A | 2PSV8417 (to be rebuilt on MO 01110298) | 1976 | Replaced | Yes |
| 6"x 10" Main Steam Safety Valve | Crosby Valve & Gage | N58737-01-0004 | N/A | RSO-1560-01 (Rebuilt valve) | 1984 | Replacement | Yes |
| 1 1/8" x 4 3/4" Bonnet Studs (6) | Crosby Valve & Gage | Trace #BF (5)/Trace #Q197-4 (1) | N/A | RSO-1560-01, SA193 B7 | N/A | Replacement | No |
| 1 3/8" x 9" Inlet Studs (12) | Mackson, Inc | Ht. #4909848, Trace #1VK | N/A | Fabbed on MO 01010806 | N/A | Replacement | No |
| 1 3/8"- 8 Inlet Nuts (10) | Nova Machine Products | Ht. #10150, Ht. Code RKW | N/A | RSO-0916-00, SA194 Gr.7 (SEE-92-0065, CR-3004-96) | N/A | Replacement | No |
| 1 3/8"- 8 Inlet Nuts (2) | Nova Machine Products | Ht. #69161, Ht. Code LUW | N/A | RSO-0234-99, SA194 Gr.7 (SEE-92-0065, CR-3004-96) | N/A | Replacement | No |

7. Description of Work:

The main steam safety valve located in plant position 2PSV8417 (s/n N58737-00-0006) was replaced as a scheduled preventative maintenance action with a spare valve (s/n N58737-01-0004) which had been returned to the vendor for rework and testing (6 each bonnet studs were also replaced by Crosby on RSO-1560-01). The inlet bolting also required replacement. (12) each studs and (12) each nuts were replaced (the studs were manufactured on MO 01010806). The removed valve was placed into the rebuild program to be rebuilt under MO 01110298.

8. Tests Conducted: System Functional Pressure Test Pressure: NOP Temp: N/A

See: AR 020100957-21

Note: Supplemental sheets in the form of lists, sketches, or drawings may be used provided (1) size is 8 1/2 in. x 11 in., (2) information in Items 1 through 6 on this report is included on each sheet, (3) each sheet is numbered and the number of sheets is recorded at the top of this form, and (4) each sheet is initialed and dated by the Owner or Owner's designee and the AIA.

# FORM NIS-2 (back)

9. Remarks: CR-3004-96 reconciles the replacement nuts which were certified to ASME III-2, 1989 Ed.; No Add. (Reference· SEE 92-0065). CR-3005-96 reconciles the replacement studs which were certified to ASME III-2, 1989 Ed; No Add.

(Applicable Manufacturer's Data Reports are available on-site)

## CERTIFICATE OF COMPLIANCE

We certify that the statements made in the report are correct and this **replacement** conforms to the rules of the ASME Code, Section XI.
repair or replacement

Type Code Symbol Stamp: N/A

Certificate of Authorizaton No: N/A  Expiration Date: N/A

Signed: [signature] Supervising ASME Codes Engineer Date: 8/5/02
Owner or Owner's Designee, Title

## CERTIFICATE OF INSPECTION

I, the undersigned holding a valid commission issued by the National Board of Boiler and Pressure Vessel Inspectors and the State or Province of **California**, and employed by **Factory Mutual Insurance Company** of **Johnston, Rhode Island** have inspected the components described in this Owner's Report during the period 04/08/02 to 08/06/02, and state that to the best of my knowledge and belief, the Owner has performed examinations and taken corrective measures described in this Owner's Report in accordance with the requirements of the ASME Code, Section XI.

By signing this certificate, neither the Inspector nor his employer makes any warranty, expressed or implied, concerning the examinations and corrective measures described in this Owner's Report. Furthermore, neither the Inspector nor his employer shall be liable in any manner for any personal injury or property damage or a loss of any kind arising from or connected with this inspection.

[signature] Commissions 1862 California
Inspector's Signature  National Board, State, Province, and Endorsements

Date Aug. 6, 2002

WO: 01050282000

# FORM NIS-2 OWNER'S REPORT FOR REPAIRS OR REPLACEMENTS

As Required by the Provisions of the ASME Code Section XI

1. Owner: Southern California Edison Company
2244 Walnut Grove Avenue
Rosemead, California 91770

Unit: 2
MO: 01050266000
Rspec: ASME SECTION XI DATA-0193
PID: 40141C (G3)
N5: S2-1301-2

2. Plant: San Onofre Nuclear Generating Station
San Clemente, California 92674-012

3. Work Performed by: Southern California Edison Company

Type Code Symbol Stamp: N/A
Authorization No: N/A
Expiration Date: N/A

4. Identification of System: Main Steam

5. (a) Applicable Construction Code: ASME Section III, Class 2, 1974 Edition, S.'74 Edition; Code Case: None

(b) Applicable Edition of Section XI Utilized for Repairs or Replacements: 1989 Edition, No Addenda

6. Identification of Components Repaired or Replaced and Replacement Components:

| Name of Component | Name of Manufacturer | Manufacturer Serial No. | National Board No. | Other Identification | Year Built | Repaired, Replaced or Replacement | ASME Code Stamped Yes/No |
|---|---|---|---|---|---|---|---|
| 6"x 10" Main Steam Safety Valve | Crosby Valve & Gage | N58737-00-0036 | N/A | 2PSV8418 (to be rebuilt on MO 01110317) | 1977 | Replaced | Yes |
| 6"x 10" Main Steam Safety Valve | Crosby Valve & Gage | N58737-01-0038 | N/A | RSO-1560-01 (Rebuilt valve) | 1984 | Replacement | Yes |
| 1 3/8" x 9" Inlet Studs (12) | Mackson, Inc. | Ht. #4909848, Trace #1VK | N/A | Fabbed on MO 01010806 | N/A | Replacement | No |
| 1 3/8"- 8 Inlet Nuts (12) | Nova Machine Products | Ht. #10150, Ht. Code RKW | N/A | RSO-0916-00, SA194 Gr.7 (SEE-92-0065, CR-3004-96) | N/A | Replacement | No |

7. Description of Work:

The main steam safety valve located in plant position 2PSV8418 (s/n N58737-00-0036) was replaced as a scheduled preventative maintenance action with a spare valve (s/n N58737-01-0038) which had been returned to the vendor for rework and testing. The inlet bolting was also replaced. (12) each studs and (12) each nuts were replaced (the studs were manufactured on MO 01010806). The removed valve was placed into the rebuild program to be rebuilt under MO 01110317.

8. Tests Conducted: System Functional Pressure Test Pressure: NOP Temp: N/A

See: AR 020100957-22

Note Supplemental sheets in the form of lists, sketches, or drawings may be used provided (1) size is 8 1/2 in. x 11 in., (2) information in Items 1 through 6 on this report is included on each sheet, (3) each sheet is numbered and the number of sheets is recorded at the top of this form, and (4) each sheet is initialed and dated by the Owner or Owner's designee and the AIA.

# FORM NIS-2 (back)

9. Remarks: CR-3004-96 reconciles the replacement nuts which were certified to ASME III-2, 1989 Ed.; No Add. (Reference: SEE 92-0065). CR-3005-96 reconciles the replacement studs which were certified to ASME III-2, 1989 Ed; No Add.

(Applicable Manufacturer's Data Reports are available on-site)

## CERTIFICATE OF COMPLIANCE

We certify that the statements made in the report are correct and this **replacement** conforms to the rules of the ASME Code, Section XI.
repair or replacement

Type Code Symbol Stamp: N/A

Certificate of Authorizaton No: N/A  Expiration Date: N/A

Signed: [signature] Supervising ASME Codes Engineer Date: 8/5/02
Owner or Owner's Designee, Title

## CERTIFICATE OF INSPECTION

I, the undersigned holding a valid commission issued by the National Board of Boiler and Pressure Vessel Inspectors and the State or Province of **California**, and employed by **Factory Mutual Insurance Company** of **Johnston, Rhode Island** have inspected the components described in this Owner's Report during the period 04/08/02 to 08/06/02, and state that to the best of my knowledge and belief, the Owner has performed examinations and taken corrective measures described in this Owner's Report in accordance with the requirements of the ASME Code, Section XI.

By signing this certificate, neither the Inspector nor his employer makes any warranty, expressed or implied, concerning the examinations and corrective measures described in this Owner's Report. Furthermore, neither the Inspector nor his employer shall be liable in any manner for any personal injury or property damage or a loss of any kind arising from or connected with this inspection.

[signature] Commissions 1862 California
Inspector's Signature  National Board, State, Province, and Endorsements

Date Aug. 6, 2002

WO: 01050266000

# FORM NIS-2 OWNER'S REPORT FOR REPAIRS OR REPLACEMENTS

As Required by the Provisions of the ASME Code Section XI

1. Owner: Southern California Edison Company
2244 Walnut Grove Avenue
Rosemead, California 91770

Unit: 2
MO: 01050319000
Rspec: ASME SECTION XI DATA-0389
PID: 40112C (E7)
N5: S2-1204-11

2. Plant: San Onofre Nuclear Generating Station
San Clemente, California 92674-0128

3. Work Performed by: Southern California Edison Company

Type Code Symbol Stamp: N/A
Authorization No: N/A
Expiration Date: N/A

4. Identification of System: Safety Injection and Shutdown Cooling

5. (a) Applicable Construction Code: ASME Section III, Class 2, 1974 Edition, Summer 1974 Addenda; Code Case: None

(b) Applicable Edition of Section XI Utilized for Repairs or Replacements: 1989 Edition, No Addenda

6. Identification of Components Repaired or Replaced and Replacement Components:

| Name of Component | Name of Manufacturer | Manufacturer Serial No. | National Board No. | Other Identification | Year Built | Repaired, Replaced or Replacement | ASME Code Stamped Yes/No |
|---|---|---|---|---|---|---|---|
| 1 1/2" x 2 1/2" Nozzle Type Relief Valve | Crosby Valve & Gage | N59381-00-0002 | N/A | 2PSV9321 | 1984 | Replaced | Yes |
| 1 1/2" x 2 1/2" Nozzle Type Relief Valve | Crosby Valve & Gage | N59381-00-0003 | N/A | Rebuilt on MO 02050624 | 1984 | Replacement | Yes |

7. Description of Work:

Replaced the relief valve (s/n N59381-00-0002) in plant position 2PSV9321 with a rebuilt and tested spare valve (s/n N59381-00-0003) that was rebuilt on MO 02050624. The removed valve was placed into the SONGS rebuild program.

8. Tests Conducted: System Functional Pressure Test Pressure: NOP Temp: NOT

See: AR 020100957-05

Note: Supplemental sheets in the form of lists, sketches, or drawings may be used provided (1) size is 8 1/2 in. x 11 in., (2) information in Items 1 through 6 on this report is included on each sheet, (3) each sheet is numbered and the number of sheets is recorded at the top of this form, and (4) each sheet is initialed and dated by the Owner or Owner's designee and the AIA.

# FORM NIS-2 (back)

9. Remarks: None.

(Applicable Manufacturer's Data Reports are available on-site)

## CERTIFICATE OF COMPLIANCE

We certify that the statements made in the report are correct and this **replacement** conforms to the rules of the ASME Code, Section XI.
repair or replacement

Type Code Symbol Stamp: N/A

Certificate of Authorizaton No: N/A  Expiration Date: N/A

Signed: _____ Supervising ASME Codes Engineer Date: 7/17/02
Owner or Owner's Designee, Title

## CERTIFICATE OF INSPECTION

I, the undersigned holding a valid commission issued by the National Board of Boiler and Pressure Vessel Inspectors and the State or Province of **California**, and employed by **Factory Mutual Insurance Company** of **Johnston, Rhode Island** have inspected the components described in this Owner's Report during the period 02-11-02 to 07/17/02, and state that to the best of my knowledge and belief, the Owner has performed examinations and taken corrective measures described in this Owner's Report in accordance with the requirements of the ASME Code, Section XI.

By signing this certificate, neither the Inspector nor his employer makes any warranty, expressed or implied, concerning the examinations and corrective measures described in this Owner's Report. Furthermore, neither the Inspector nor his employer shall be liable in any manner for any personal injury or property damage or a loss of any kind arising from or connected with this inspection.

_____ Commissions 1867 California
Inspector's Signature  National Board, State, Province, and Endorsements

Date July 17, 2002

WO: 01050319000

# FORM NIS-2 OWNER'S REPORT FOR REPAIRS OR REPLACEMENTS

As Required by the Provisions of the ASME Code Section XI

1. Owner: Southern California Edison Company
2244 Walnut Grove Avenue
Rosemead, California 91770

Unit: 2
MO: 01052106000
Rspec: ASME SECTION XI DATA-0581
PID: 40123A (G2)
N5: S2-1208-3

2. Plant: San Onofre Nuclear Generating Station
San Clemente, California 92674-012

3. Work Performed by: Southern California Edison Company

Type Code Symbol Stamp: N/A
Authorization No: N/A
Expiration Date: N/A

4. Identification of System: Chemical and Volume Control

5. (a) Applicable Construction Code: ASME Section III, Class 2, 1971 Edition, Summer 1973 Add., Code Case: None

(b) Applicable Edition of Section XI Utilized for Repairs or Replacements: 1989 Edition, No Addenda

6. Identification of Components Repaired or Replaced and Replacement Components:

| Name of Component | Name of Manufacturer | Manufacturer Serial No. | National Board No. | Other Identification | Year Built | Repaired, Replaced or Replacement | ASME Code Stamped Yes/No |
|---|---|---|---|---|---|---|---|
| 1 1/2" 1500# Angle/Drag Valve | Control Components | 352081-1-2 | N/A | 2LV0110B | 1985 | — | Yes |
| Spindle (Plug) | Control Components | M332950, Ht. #7149EY32 | N/A | RSO-1952-99, SB637 NO7718 | 1999 | Replacement | Yes |

7. Description of Work:

The pressurizer level control valve located in plant position 2LV0110B (s/n 352081-1-2) was disassembled and the spindle (plug) was replaced with an in-kind replacement. The valve was reassembled and reinstalled into 2LV0110B.

8. Tests Conducted: System Inservice Pressure Test Pressure: NOP Temp: N/A
Reference: SO23-XVII-3.2.1

Note Supplemental sheets in the form of lists, sketches, or drawings may be used provided (1) size is 8 1/2 in. x 11 in., (2) information in Items 1 through 6 on this report is included on each sheet, (3) each sheet is numbered and the number of sheets is recorded at the top of this form, and (4) each sheet is initialed and dated by the Owner or Owner's designee and the AIA.

# FORM NIS-2 (back)

9. Remarks: None.

(Applicable Manufacturer's Data Reports are available on-site)

## CERTIFICATE OF COMPLIANCE

We certify that the statements made in the report are correct and this **replacement** conforms to the rules of the ASME Code, Section XI.
repair or replacement

Type Code Symbol Stamp: N/A

Certificate of Authorizaton No: N/A  Expiration Date: N/A

Signed: _____ Supervising ASME Codes Engineer Date: 6/4/02
Owner or Owner's Designee, Title

## CERTIFICATE OF INSPECTION

I, the undersigned holding a valid commission issued by the National Board of Boiler and Pressure Vessel Inspectors and the State or Province of **California**, and employed by **Factory Mutual Insurance Company** of **Johnston, Rhode Island** have inspected the components described in this Owner's Report during the period 10/11/01 to 06/05/02, and state that to the best of my knowledge and belief, the Owner has performed examinations and taken corrective measures described in this Owner's Report in accordance with the requirements of the ASME Code, Section XI.

By signing this certificate, neither the Inspector nor his employer makes any warranty, expressed or implied, concerning the examinations and corrective measures described in this Owner's Report. Furthermore, neither the Inspector nor his employer shall be liable in any manner for any personal injury or property damage or a loss of any kind arising from or connected with this inspection.

_____ Commissions 1862 California
Inspector's Signature  National Board, State, Province, and Endorsements

Date June 6, 2002

WO: 01052106000

# FORM NIS-2 OWNER'S REPORT FOR REPAIRS OR REPLACEMENTS

As Required by the Provisions of the ASME Code Section XI

1. Owner: Southern California Edison Company
2244 Walnut Grove Avenue
Rosemead, California 91770

Unit: N.
MO: 01061346000
Rspec: GEN-166 R1
PID: N/A
N5: N/A

2. Plant: San Onofre Nuclear Generating Station
San Clemente, California 92674-012

3. Work Performed by: Southern California Edison Company

Type Code Symbol Stamp: N/A
Authorization No: N/A
Expiration Date: N/A

4. Identification of System: N/A - Spare

5. (a) Applicable Construction Code: ASME Section III, Class 2, 1974 Edition, S'.74 Addenda; Code Case: None

(b) Applicable Edition of Section XI Utilized for Repairs or Replacements: 1989 Edition, No Addenda

6. Identification of Components Repaired or Replaced and Replacement Components:

| Name of Component | Name of Manufacturer | Manufacturer Serial No. | National Board No. | Other Identification | Year Built | Repaired, Replaced or Replacement | ASME Code Stamped Yes/No |
|---|---|---|---|---|---|---|---|
| 1 3/8" x length 36" All-Thread Stock (12 ea.) | Mackson, Inc. | Ht. #4909848 Tr. #1VK | N/A | RSO-0412-01, SA193 B7 (CR-3005-96) | N/A | Replacement | No |
| 1 3/8" x length 36" All-Thread Stock (4 ea.) | Nova Machine Products | Ht. #93985, Ht. Code EDW | N/A | RSO-0398-97, SA193 B7 (CR-3005-96) | N/A | Replacement | No |
| 1 3/8" x length 36" All-Thread Stock (4 ea.) | Nova Machine Products | Ht. #809323, Ht. Code M4K | N/A | RSO-2562-93, SA193 B7 | N/A | Replacement | No |

7. Description of Work:

(60) spare replacement studs (for the inlets of the main steam safety valves) were manufactured by cutting to length and then machining as necessary from all-thread stock. Twelve pieces of all-thread stock (RSO-0412-01) were cut into studs (36 each, 9" lengths); four pieces of all-thread stock (RSO-0398-97) were cut into studs (12 each, 9" lengths); and four pieces of all-thread stock (RSO-2562-93) were cut into studs (12 each, 9" lengths), with the required markings being transferred to the cut pieces in accordance with Repair Specification GEN-166 Revision 1 and DWG SO23-507-3-17, DCN #2 and DCN #7.

8. Tests Conducted: N/A Pressure: N/A Temp: N/A

Note: Supplemental sheets in the form of lists, sketches, or drawings may be used provided (1) size is 8 1/2 in. x 11 in., (2) information in Items 1 through 6 on this report is included on each sheet, (3) each sheet is numbered and the number of sheets is recorded at the top of this form, and (4) each sheet is initialed and dated by the Owner or Owner's designee and the AIA.

## FORM NIS-2 (back)

9. Remarks: CR-3005-96 Rev. 1 reconciles the replacement studs which were certified to ASME III-2, 1989 Edition, No Addenda.

(Applicable Manufacturer's Data Reports are available on-site)

### CERTIFICATE OF COMPLIANCE

We certify that the statements made in the report are correct and this **replacement** conforms to the rules of the ASME Code, Section XI.
repair or replacement

Type Code Symbol Stamp: N/A

Certificate of Authorizaton No: N/A  Expiration Date: N/A

Signed: _____ Supervising ASME Codes Engineer Date: 8/16/01
Owner or Owner's Designee, Title

### CERTIFICATE OF INSPECTION

I, the undersigned holding a valid commission issued by the National Board of Boiler and Pressure Vessel Inspectors and the State or Province of **California**, and employed by **Factory Mutual Insurance Company** of **Johnston, Rhode Island** have inspected the components described in this Owner's Report during the period 06/26/01 to 08/17/01, and state that to the best of my knowledge and belief, the Owner has performed examinations and taken corrective measures described in this Owner's Report in accordance with the requirements of the ASME Code, Section XI.

By signing this certificate, neither the Inspector nor his employer makes any warranty, expressed or implied, concerning the examinations and corrective measures described in this Owner's Report. Furthermore, neither the Inspector nor his employer shall be liable in any manner for any personal injury or property damage or a loss of any kind arising from or connected with this inspection.

_____ Commissions 1862 California
Inspector's Signature  National Board, State, Province, and Endorsements

Date August 17, 2001

WO: 01061346000

# FORM NIS-2 OWNER'S REPORT FOR REPAIRS OR REPLACEMENTS

As Required by the Provisions of the ASME Code Section XI

1. Owner: Southern California Edison Company
2244 Walnut Grove Avenue
Rosemead, California 91770

Unit: A
MO: 01081177000
Rspec: 001001998-03
PID: N/A
N5: N/A

2. Plant: San Onofre Nuclear Generating Station
San Clemente, California 92674-012

3. Work Performed by: Southern California Edison Company

Type Code Symbol Stamp: N/A
Authorization No: N/A
Expiration Date: N/A

4. Identification of System: Feedwater

5. (a) Applicable Construction Code: ASME Section III, Class 2, 1974 Edition, S.'75 Addenda; Code Case: None

(b) Applicable Edition of Section XI Utilized for Repairs or Replacements: 1989 Edition, No Addenda

6. Identification of Components Repaired or Replaced and Replacement Components:

| Name of Component | Name of Manufacturer | Manufacturer Serial No. | National Board No. | Other Identification | Year Built | Repaired, Replaced or Replacement | ASME Code Stamped Yes/No |
|---|---|---|---|---|---|---|---|
| Valve Bonnet | WKM (Cooper) | Ht.#1-4743 | N/A | Removed from 2HV4052 (valve s/n 503456) on MO 97011254001 | N/A | Repaired | No |

7. Description of Work:

Perfomed machining of flat areas in four places on the spare valve bonnet (removed from valve s/n 503456, located in 2HV4052, under MO 97011254) that correspond to hole locations drilled in the lifting rig. Machining was performed in accordance with Repair Specification 001001998-03 and Drawing SO23-507-6-59 DCN 20.

8. Tests Conducted: N/A  Pressure: N/A  Temp: N/A

Note: Supplemental sheets in the form of lists, sketches, or drawings may be used provided (1) size is 8 1/2 in. x 11 in., (2) information in Items 1 through 6 on this report is included on each sheet, (3) each sheet is numbered and the number of sheets is recorded at the top of this form, and (4) each sheet is initialed and dated by the Owner or Owner's designee and the AIA.

10  MO#01081177000

## FORM NIS-2 (back)

9. Remarks: None.

(Applicable Manufacturer's Data Reports are available on-site)

### CERTIFICATE OF COMPLIANCE

We certify that the statements made in the report are correct and this **repair** conforms to the rules of the ASME Code, Section XI.
repair or replacement

Type Code Symbol Stamp: N/A

Certificate of Authorizaton No: N/A  Expiration Date: N/A

Signed: _____ Supervising ASME Codes Engineer Date: 11/6/01
Owner or Owner's Designee, Title

### CERTIFICATE OF INSPECTION

I, the undersigned holding a valid commission issued by the National Board of Boiler and Pressure Vessel Inspectors and the State or Province of **California**, and employed by **Factory Mutual Insurance Company** of **Johnston, Rhode Island** have inspected the components described in this Owner's Report during the period 8/29/01 to 11/7/01, and state that to the best of my knowledge and belief, the Owner has performed examinations and taken corrective measures described in this Owner's Report in accordance with the requirements of the ASME Code, Section XI.

By signing this certificate, neither the Inspector nor his employer makes any warranty, expressed or implied, concerning the examinations and corrective measures described in this Owner's Report. Furthermore, neither the Inspector nor his employer shall be liable in any manner for any personal injury or property damage or a loss of any kind arising from or connected with this inspection.

_____ Commissions 1862 California
Inspector's Signature  National Board, State, Province, and Endorsements

Date Nov. 7, 2001

MOF# 01081177000

# FORM NIS-2 OWNER'S REPORT FOR REPAIRS OR REPLACEMENTS

As Required by the Provisions of the ASME Code Section XI

1. Owner: Southern California Edison Company
2244 Walnut Grove Avenue
Rosemead, California 91770

Unit: 2
MO: 01090872000
Rspec: 018-01
PID: 40111A (E6)
N5: S2-1201-3

2. Plant: San Onofre Nuclear Generating Station
San Clemente, California 92674-0128

3. Work Performed by: Southern California Edison Company

Type Code Symbol Stamp: N/A
Authorization No: N/A
Expiration Date: N/A

4. Identification of System: Reactor Coolant

5. (a) Applicable Construction Code: ASME Section III, NB (Class 1), 1971 Ed., S.'72 Add. (Design, Fab & Exam); Code Case: N-474-1

5. (b) Applicable Edition of Section XI Utilized for Repairs or Replacements: 1989 Edition, No Addenda

6. Identification of Components Repaired or Replaced and Replacement Components:

| Name of Component | Name of Manufacturer | Manufacturer Serial No. | National Board No. | Other Identification | Year Built | Repaired, Replaced or Replacement | ASME Code Stamped Yes/No |
|---|---|---|---|---|---|---|---|
| RSC Loop Thermowell | SCE | 140-97 | N/A | 2TE0112-2 | N/A | Replaced | No |
| RSC Loop Thermowell | Weed Instr. Co. | N15768 | N/A | RSO-0385-02, Fabbed under SOG-01-001 | N/A | Replacement | No |
| RSC Loop Thermowell | SCE | 132-97 | N/A | 2TE0112-3 | N/A | Replaced | No |
| RSC Loop Thermowell | Weed Instr. Co. | N15769 | N/A | RSO-0385-02, Fabbed under SOG-01-001 | N/A | Replacement | No |

7. Description of Work:

Replaced existing SCE manufactured RCS Loop thermowells in plant locations 2TE0112-2 and 2TE0112-3 (Line No. S21201ML001 and Spool No. 503-01) with replacement thermowells designed and machined by Weed Instrument Co. using INCONEL 690 material. NDE examination 2PT-055-02 was performed on the final welds with satisfactory results. All work performed in accordance with Repair Specification 018-01 and ECP's 010800190-54 and 010800190-56. Note: The replacement thermowells were fabbed under hard copy traveler SOG-01-001 (included in RSO-0385-02).

8. Tests Conducted: System Leakage Pressure Test Pressure: NOP Temp: NOT

VT-2 performed per Procedure SO23-XVII-3.1.1

Note Supplemental sheets in the form of lists, sketches, or drawings may be used provided (1) size is 8 1/2 in x 11 in., (2) information in Items 1 through 6 on this report is included on each sheet, (3) each sheet is numbered and the number of sheets is recorded at the top of this form, and (4) each sheet is initialed and dated by the Owner or Owner's designee and the AIA.

# FORM NIS-2 (back)

9. Remarks: None.

(Applicable Manufacturer's Data Reports are available on-site)

## CERTIFICATE OF COMPLIANCE

We certify that the statements made in the report are correct and this **replacement** conforms to the rules of the ASME Code, Section XI.
repair or replacement

Type Code Symbol Stamp: N/A

Certificate of Authorizaton No: N/A

Expiration Date: N/A

Signed: _____ Supervising ASME Codes Engineer Date: 8/7/02
Owner or Owner's Designee, Title

## CERTIFICATE OF INSPECTION

I, the undersigned holding a valid commission issued by the National Board of Boiler and Pressure Vessel Inspectors and the State or Province of **California**, and employed by **Factory Mutual Insurance Company** of **Johnston, Rhode Island** have inspected the components described in this Owner's Report during the period 02/02/02 to 08/08/02, and state that to the best of my knowledge and belief, the Owner has performed examinations and taken corrective measures described in this Owner's Report in accordance with the requirements of the ASME Code, Section XI.

By signing this certificate, neither the Inspector nor his employer makes any warranty, expressed or implied, concerning the examinations and corrective measures described in this Owner's Report. Furthermore, neither the Inspector nor his employer shall be liable in any manner for any personal injury or property damage or a loss of any kind arising from or connected with this inspection.

_____ Commissions 1862 California
Inspector's Signature
National Board, State, Province, and Endorsements

Date Aug. 8, 2002

WO: 01090672000

# FORM NIS-2 OWNER'S REPORT FOR REPAIRS OR REPLACEMENTS

As Required by the Provisions of the ASME Code Section XI

1. Owner: Southern California Edison Company
2244 Walnut Grove Avenue
Rosemead, California 91770

Unit: 2
MO: 01090874000
Rspec: 016-01
PID: 40111A (E3-4)
N5: S2-1201-3

2. Plant: San Onofre Nuclear Generating Station
San Clemente, California 92674-0128

3. Work Performed by: Southern California Edison Company

Type Code Symbol Stamp: N/A
Authorization No: N/A
Expiration Date: N/A

4. Identification of System: Reactor Coolant

5. (a) Applicable Construction Code: ASME Section III, NB (Class 1), 1971 Ed., S.'72 Add. (Design, Fab & Exam); Code Case N-474-1

5. (b) Applicable Edition of Section XI Utilized for Repairs or Replacements: 1989 Edition, No Addenda

6. Identification of Components Repaired or Replaced and Replacement Components:

| Name of Component | Name of Manufacturer | Manufacturer Serial No. | National Board No. | Other Identification | Year Built | Repaired, Replaced or Replacement | ASME Code Stamped Yes/No |
|---|---|---|---|---|---|---|---|
| RSC Loop Thermowell | SCE | 162-97 | N/A | 2TE0122-2 | N/A | Replaced | No |
| RSC Loop Thermowell | Weed Instr. Co. | N15767 | N/A | RSO-0385-02, Fabbed under SOG-01-001 | N/A | Replacement | No |
| RSC Loop Thermowell | SCE | 156-97 | N/A | 2TE0122-3 | N/A | Replaced | No |
| RSC Loop Thermowell | Weed Instr. Co. | N15770 | N/A | RSO-0385-02, Fabbed under SOG-01-001 | N/A | Replacement | No |

7. Description of Work:

Replaced existing SCE manufactured RCS Loop thermowells in plant locations 2TE0122-2 and 2TE0122-3 (Line No. S21201ML002 and Spool No. 503-03) with replacement thermowells designed and machined by Weed Instrument Co. using INCONEL 690 material. NDE examination 2PT-052-02 was performed on the final welds with satisfactory results. All work performed in accordance with Repair Specification 016-01 and ECP's 010800190-49 and 010800190-51. Note: The replacement thermowells were fabbed under hard copy traveler SOG-01-001 (included in RSO-0385-02).

8. Tests Conducted: System Leakage Pressure Test Pressure: NOP Temp: NOT

VT-2 performed per Procedure SO23-XVII-3.1.1

Note: Supplemental sheets in the form of lists, sketches, or drawings may be used provided (1) size is 8 1/2 in. x 11 in., (2) information in Items 1 through 6 on this report is included on each sheet, (3) each sheet is numbered and the number of sheets is recorded at the top of this form, and (4) each sheet is initialed and dated by the Owner or Owner's designee and the AIA.

# FORM NIS-2 (back)

9. Remarks: None.

(Applicable Manufacturer's Data Reports are available on-site)

## CERTIFICATE OF COMPLIANCE

We certify that the statements made in the report are correct and this **replacement** conforms to the rules of the ASME Code, Section XI.
repair or replacement

Type Code Symbol Stamp: N/A

Certificate of Authorizaton No: N/A

Expiration Date: N/A

Signed: _____ Supervising ASME Codes Engineer Date: 8/7/02
Owner or Owner's Designee, Title

## CERTIFICATE OF INSPECTION

I, the undersigned holding a valid commission issued by the National Board of Boiler and Pressure Vessel Inspectors and the State or Province of **California**, and employed by **Factory Mutual Insurance Company** of **Johnston, Rhode Island** have inspected the components described in this Owner's Report during the period 02/26/02 to 08/04/02, and state that to the best of my knowledge and belief, the Owner has performed examinations and taken corrective measures described in this Owner's Report in accordance with the requirements of the ASME Code, Section XI.

By signing this certificate, neither the Inspector nor his employer makes any warranty, expressed or implied, concerning the examinations and corrective measures described in this Owner's Report. Furthermore, neither the Inspector nor his employer shall be liable in any manner for any personal injury or property damage or a loss of any kind arising from or connected with this inspection.

_____ Commissions 1862 California
Inspector's Signature National Board, State, Province, and Endorsements

Date Aug. 8, 2002

WO: 01090874000

# FORM NIS-2 OWNER'S REPORT FOR REPAIRS OR REPLACEMENTS

As Required by the Provisions of the ASME Code Section XI

1. Owner: Southern California Edison Company
2244 Walnut Grove Avenue
Rosemead, California 91770

Unit: 2
MO: 01090875000
Rspec: 015-01
PID: 40111A (C6-7)
N5: S2-1201-3

2. Plant: San Onofre Nuclear Generating Station
San Clemente, California 92674-012

3. Work Performed by: Southern California Edison Company

Type Code Symbol Stamp: N/A
Authorization No: N/A
Expiration Date: N/A

4. Identification of System: Reactor Coolant

5. (a) Applicable Construction Code ASME Section III, NB (Class 1), 1971 Ed., S.'72 Add. (Design, Fab & Exam); Code Case: N-474-1

5. (b) Applicable Edition of Section XI Utilized for Repairs or Replacements: 1989 Edition, No Addenda

6. Identification of Components Repaired or Replaced and Replacement Components:

| Name of Component | Name of Manufacturer | Manufacturer Serial No. | National Board No. | Other Identification | Year Built | Repaired, Replaced or Replacement | ASME Code Stamped Yes/No |
|---|---|---|---|---|---|---|---|
| RSC Loop Thermowell | SCE | 164-97 | N/A | 2TE0111Y1 / 2TE0911Y1 | N/A | Replaced | No |
| RSC Loop Thermowell | Weed Instr. Co. | N15762 | N/A | RSO-0385-02, Fabbed under SOG-01-001 | N/A | Replacement | No |
| RSC Loop Thermowell | SCE | 151-97 | N/A | 2TE9178-1 | N/A | Replaced | No |
| RSC Loop Thermowell | Weed Instr. Co | N15841 | N/A | RSO-0385-02, Fabbed under SOG-01-001 | N/A | Replacement | No |
| RSC Loop Thermowell | SCE | 160-97 | N/A | 2TE9178-3 | N/A | Replaced | No |
| RSC Loop Thermowell | Weed Instr. Co. | N15771 | N/A | RSO-0385-02, Fabbed under SOG-01-001 | N/A | Replacement | No |

7. Description of Work:

Replaced existing SCE manufactured RCS Loop thermowells in plant locations 2TE0111Y1/0911Y1, 2TE9178-1, and 2TE9178-3 (Line No. S21201ML007 and Spool No. 504-01) with replacement thermowells designed and machined by Weed Instrument Co. using INCONEL 690 material. NDE examination 2PT-066-02 was performed on the final welds with satisfactory results. All work performed in accordance with Repair Specification 015-01 and ECP's 010800190-50, 010800190-62, and 010800190-52. Note: The replacement thermowells were fabbed under hard copy traveler SOG-01-001 (included in RSO-0385-02).

8. Tests Conducted: System Leakage Pressure Test Pressure: NOP Temp: NOT

**VT-2 performed per Procedure SO23-XVII-3.1.**

Note: Supplemental sheets in the form of lists, sketches, or drawings may be used provided (1) size is 8 1/2 in. x 11 in., (2) information in Items 1 through 6 on this report is included on each sheet, (3) each sheet is numbered and the number of sheets is recorded at the top of this form, and (4) each sheet is initialed and dated by the Owner or Owner's designee and the AIA.

# FORM NIS-2 (back)

9. Remarks: None.

(Applicable Manufacturer's Data Reports are available on-site)

## CERTIFICATE OF COMPLIANCE

We certify that the statements made in the report are correct and this **replacement** conforms to the rules of the ASME Code, Section XI.
repair or replacement

Type Code Symbol Stamp: N/A

Certificate of Authorizaton No: N/A

Expiration Date: N/A

Signed: [signature] Supervising ASME Codes Engineer Date: 8/7/02
Owner or Owner's Designee, Title

## CERTIFICATE OF INSPECTION

I, the undersigned holding a valid commission issued by the National Board of Boiler and Pressure Vessel Inspectors and the State or Province of **California**, and employed by **Factory Mutual Insurance Company** of **Johnston, Rhode Island** have inspected the components described in this Owner's Report during the period 02/06/02 to 08/08/02, and state that to the best of my knowledge and belief, the Owner has performed examinations and taken corrective measures described in this Owner's Report in accordance with the requirements of the ASME Code, Section XI.

By signing this certificate, neither the Inspector nor his employer makes any warranty, expressed or implied, concerning the examinations and corrective measures described in this Owner's Report. Furthermore, neither the Inspector nor his employer shall be liable in any manner for any personal injury or property damage or a loss of any kind arising from or connected with this inspection.

[signature] Commissions 1862 California
Inspector's Signature National Board, State, Province, and Endorsements

Date Aug. 8, ~~2003~~ 2002 per ANII log
[signature] 8/24/02 ANII

WO: 01090675000

# FORM NIS-2 OWNER'S REPORT FOR REPAIRS OR REPLACEMENTS

As Required by the Provisions of the ASME Code Section XI

1. Owner: Southern California Edison Company
2244 Walnut Grove Avenue
Rosemead, California 91770

Unit: 2
MO: 01090877000
Rspec: 017-01
PID: 40111A (G2-4)
N5: S2-1201-3

2. Plant: San Onofre Nuclear Generating Station
San Clemente, California 92674-012

3. Work Performed by: Southern California Edison Company

Type Code Symbol Stamp: N/A
Authorization No: N/A
Expiration Date: N/A

4. Identification of System: Reactor Coolant

5. (a) Applicable Construction Code ASME Section III, NB (Class 1), 1971 Ed., S '72 Add. (Design, Fab & Exam); Code Case: N-474-1

5. (b) Applicable Edition of Section XI Utilized for Repairs or Replacements: 1989 Edition, No Addenda

6. Identification of Components Repaired or Replaced and Replacement Components:

| Name of Component | Name of Manufacturer | Manufacturer Serial No. | National Board No. | Other Identification | Year Built | Repaired, Replaced or Replacement | ASME Code Stamped Yes/No |
|---|---|---|---|---|---|---|---|
| RSC Loop Thermowell | SCE | 141-97 | N/A | 2TE9179-1 | N/A | Replaced | No |
| RSC Loop Thermowell | Weed Instr. Co. | N15763 | N/A | RSO-0385-02, Fabbed under SOG-01-001 | N/A | Replacement | No |
| RSC Loop Thermowell | SCE | 153-97 | N/A | 2TE9179-3 | N/A | Replaced | No |
| RSC Loop Thermowell | Weed Instr. Co. | N15757 | N/A | RSO-0385-02, Fabbed under SOG-01-001 | N/A | Replacement | No |
| RSC Loop Thermowell | SCE | 150-97 | N/A | 2TE0125-1 / 2TE0925-1 | N/A | Replaced | No |
| RSC Loop Thermowell | Weed Instr. Co. | N15766 | N/A | RSO-0385-02, Fabbed under SOG-01-001 | N/A | Replacement | No |

7. Description of Work:

Replaced existing SCE manufactured RCS Loop thermowells in plant locations 2TE9179-1, 2TE9179-3, and 2TE0125-1/0925-1 (Line No. S21201ML008 and Spool No. 504-04) with replacement thermowells designed and machined by Weed Instrument Co. using INCONEL 690 material. NDE examination 2PT-053-02 was performed on the final welds with satisfactory results. All work performed in accordance with Repair Specification 017-01 and ECP's 010800190-55, 010800190-53, and 010800190-48. Note: The replacement thermowells were fabbed under hard copy traveler SOG-01-001 (included in RSO-0385-02).

8. Tests Conducted: System Leakage Pressure Test Pressure: NOP Temp: NOT

**VT-2 performed per Procedure SO23-XVII-3.1.**

Note Supplemental sheets in the form of lists, sketches, or drawings may be used provided (1) size is 8 1/2 in. x 11 in., (2) information in Items 1 through 6 on this report is included on each sheet, (3) each sheet is numbered and the number of sheets is recorded at the top of this form, and (4) each sheet is initialed and dated by the Owner or Owner's designee and the AIA.

# FORM NIS-2 (back)

9. Remarks: None.

(Applicable Manufacturer's Data Reports are available on-site)

## CERTIFICATE OF COMPLIANCE

We certify that the statements made in the report are correct and this **replacement** conforms to the rules of the ASME Code, Section XI.
repair or replacement

Type Code Symbol Stamp: N/A

Certificate of Authorizaton No: N/A

Expiration Date: N/A

Signed: [signature] Supervising ASME Codes Engineer Date: 8/7/02
Owner or Owner's Designee, Title

## CERTIFICATE OF INSPECTION

I, the undersigned holding a valid commission issued by the National Board of Boiler and Pressure Vessel Inspectors and the State or Province of **California**, and employed by **Factory Mutual Insurance Company** of **Johnston, Rhode Island** have inspected the components described in this Owner's Report during the period 03/06/02 to 08/08/02, and state that to the best of my knowledge and belief, the Owner has performed examinations and taken corrective measures described in this Owner's Report in accordance with the requirements of the ASME Code, Section XI.

By signing this certificate, neither the Inspector nor his employer makes any warranty, expressed or implied, concerning the examinations and corrective measures described in this Owner's Report. Furthermore, neither the Inspector nor his employer shall be liable in any manner for any personal injury or property damage or a loss of any kind arising from or connected with this inspection.

[signature] Commissions 1862 California
Inspector's Signature National Board, State, Province, and Endorsements

Date Aug. 8, 2002

WO: 01090877000

# FORM NIS-2 OWNER'S REPORT FOR REPAIRS OR REPLACEMENTS

As Required by the Provisions of the ASME Code Section XI

1. Owner: Southern California Edison Company
2244 Walnut Grove Avenue
Rosemead, California 91770

Unit: 2
MO: 01090881000
Rspec: 014-01
PID: 40111A (C2-3)
N5: S2-1201-3

2. Plant: San Onofre Nuclear Generating Station
San Clemente, California 92674-0128

3. Work Performed by: Southern California Edison Company

Type Code Symbol Stamp: N/A
Authorization No: N/A
Expiration Date: N/A

4. Identification of System: Reactor Coolant

5. (a) Applicable Construction Code: ASME Section III, NB (Class 1), 1971 Ed., S '72 Add. (Design, Fab & Exam); Code Case N-474-1

5. (b) Applicable Edition of Section XI Utilized for Repairs or Replacements: 1989 Edition, No Addenda

6. Identification of Components Repaired or Replaced and Replacement Components:

| Name of Component | Name of Manufacturer | Manufacturer Serial No. | National Board No. | Other Identification | Year Built | Repaired, Replaced or Replacement | ASME Code Stamped Yes/No |
|---|---|---|---|---|---|---|---|
| RSC Loop Thermowell | SCE | 148-97 | N/A | 2TE9179-2 | N/A | Replaced | No |
| RSC Loop Thermowell | Weed Instr. Co. | N15755 | N/A | RSO-0385-02, Fabbed under SOG-01-001 | N/A | Replacement | No |
| RSC Loop Thermowell | SCE | 154-97 | N/A | 2TE0121Y21 / 2TE091Y2 | N/A | Replaced | No |
| RSC Loop Thermowell | Weed Instr. Co. | N15764 | N/A | RSO-0385-02, Fabbed under SOG-01-001 | N/A | Replacement | No |

7. Description of Work:

Replaced existing SCE manufactured RCS Loop thermowells in plant locations 2TE9179-2 and 2TE0121Y2/0921Y2 (Line No. S21201ML010 and Spool No. 505-04) with replacement thermowells designed and machined by Weed Instrument Co. using INCONEL 690 material. NDE examination 2PT-050-02 was performed on the final welds with satisfactory results. All work performed in accordance with Repair Specification 014-01 and ECP's 010800190-46 and 010800190-61. Note: The replacement thermowells were fabbed under hard copy traveler SOG-01-001 (included in RSO-0385-02).

8. Tests Conducted: System Leakage Pressure Test Pressure: NOP Temp: NOT

VT-2 performed per Procedure SO23-XVII-3.1.1

Note: Supplemental sheets in the form of lists, sketches, or drawings may be used provided (1) size is 8 1/2 in. x 11 in., (2) information in Items 1 through 6 on this report is included on each sheet, (3) each sheet is numbered and the number of sheets is recorded at the top of this form, and (4) each sheet is initialed and dated by the Owner or Owner's designee and the AIA.

# FORM NIS-2 (back)

9. Remarks: None.

(Applicable Manufacturer's Data Reports are available on-site)

## CERTIFICATE OF COMPLIANCE

We certify that the statements made in the report are correct and this **replacement** conforms to the rules of the ASME Code, Section XI.
repair or replacement

Type Code Symbol Stamp: N/A

Certificate of Authorizaton No: N/A

Expiration Date: N/A

Signed: [signature] Supervising ASME Codes Engineer Date: 8/7/02
Owner or Owner's Designee, Title

## CERTIFICATE OF INSPECTION

I, the undersigned holding a valid commission issued by the National Board of Boiler and Pressure Vessel Inspectors and the State or Province of **California**, and employed by **Factory Mutual Insurance Company** of **Johnston, Rhode Island** have inspected the components described in this Owner's Report during the period 03/06/02 to 08/08/02, and state that to the best of my knowledge and belief, the Owner has performed examinations and taken corrective measures described in this Owner's Report in accordance with the requirements of the ASME Code, Section XI.

By signing this certificate, neither the Inspector nor his employer makes any warranty, expressed or implied, concerning the examinations and corrective measures described in this Owner's Report. Furthermore, neither the Inspector nor his employer shall be liable in any manner for any personal injury or property damage or a loss of any kind arising from or connected with this inspection.

[signature] Commissions 1862 California
Inspector's Signature National Board, State, Province, and Endorsements

Date ~~Aug. 8, 2003~~ 2002 per ANII log
[signature] 8/29/02 ANII

WO: 01090661000

# FORM NIS-2 OWNER'S REPORT FOR REPAIRS OR REPLACEMENTS

As Required by the Provisions of the ASME Code Section XI

1. Owner: Southern California Edison Company
2244 Walnut Grove Avenue
Rosemead, California 91770

Unit: 2
MO: 01102364000
Rspec: GEN-107B R1
PID: 40111A
N5: S2-1201-3

2. Plant: San Onofre Nuclear Generating Station
San Clemente, California 92674-012

3. Work Performed by: Southern California Edison Company

Type Code Symbol Stamp: N/A
Authorization No: N/A
Expiration Date: N/A

4. Identification of System: Reactor Coolant

5. (a) Applicable Construction Code: ASME Section III, Class 1, 1971 Edition, W'73 Addenda; Code Case: None

(b) Applicable Edition of Section XI Utilized for Repairs or Replacements: 1989 Edition, No Addenda

6. Identification of Components Repaired or Replaced and Replacement Components:

| Name of Component | Name of Manufacturer | Manufacturer Serial No. | National Board No. | Other Identification | Year Built | Repaired, Replaced or Replacement | ASME Code Stamped Yes/No |
|---|---|---|---|---|---|---|---|
| CEDM #66 Vent Valve Assembly | ABB Combustion Engineering | 1370-104 | N/A | S21104CEDM #66 | 1978 | Repaired | Yes |

7. Description of Work:

Seal welded (CEDM #66) housing nut to the ball seal housing in accordance with weld record WR2-01-190 and Repair Specification Gen-107b Rev. 1 due to leakage.

8. Tests Conducted: System Leakage Pressure Test Pressure: NOP Temp: NOT

See: AR 011001062-05

Note: Supplemental sheets in the form of lists, sketches, or drawings may be used provided (1) size is 8 1/2 in x 11 in., (2) information in Items 1 through 6 on this report is included on each sheet, (3) each sheet is numbered and the number of sheets is recorded at the top of this form, and (4) each sheet is initialed and dated by the Owner or Owner's designee and the AIA.

# FORM NIS-2 (back)

9. Remarks: None.

(Applicable Manufacturer's Data Reports are available on-site)

## CERTIFICATE OF COMPLIANCE

We certify that the statements made in the report are correct and this **repair** conforms to the rules of the ASME Code, Section XI.
repair or replacement

Type Code Symbol Stamp: N/A

Certificate of Authorizaton No: N/A  Expiration Date: N/A

Signed: _____ Supervising ASME Codes Engineer Date: 1/9/02
Owner or Owner's Designee, Title

## CERTIFICATE OF INSPECTION

I, the undersigned holding a valid commission issued by the National Board of Boiler and Pressure Vessel Inspectors and the State or Province of **California**, and employed by **Factory Mutual Insurance Company** of **Johnston, Rhode Island** have inspected the components described in this Owner's Report during the period 10/19/01 to 01/11/02, and state that to the best of my knowledge and belief, the Owner has performed examinations and taken corrective measures described in this Owner's Report in accordance with the requirements of the ASME Code, Section XI.

By signing this certificate, neither the Inspector nor his employer makes any warranty, expressed or implied, concerning the examinations and corrective measures described in this Owner's Report. Furthermore, neither the Inspector nor his employer shall be liable in any manner for any personal injury or property damage or a loss of any kind arising from or connected with this inspection.

_____ Commissions 1862 California
Inspector's Signature  National Board, State, Province, and Endorsements

Date Jan. 11, 2002

WO: 01102364000

# FORM NIS-2 OWNER'S REPORT FOR REPAIRS OR REPLACEMENTS

As Required by the Provisions of the ASME Code Section XI

1. Owner: Southern California Edison Company
2244 Walnut Grove Avenue
Rosemead, California 91770

Unit: A
MO: 01110150000
Rspec: ASME SECTION XI DATA-0460
PID: N/A
N5: N/A

2. Plant: San Onofre Nuclear Generating Station
San Clemente, California 92674-0128

3. Work Performed by: Southern California Edison Company

Type Code Symbol Stamp: N/A
Authorization No: N/A
Expiration Date: N/A

4. Identification of System: Chemical and Volume Control

5. (a) Applicable Construction Code: ASME Section III, Class 2, 1974 Edition, S '74 Addenda; Code Case: None

(b) Applicable Edition of Section XI Utilized for Repairs or Replacements: 1989 Edition, No Addenda

6. Identification of Components Repaired or Replaced and Replacement Components:

| Name of Component | Name of Manufacturer | Manufacturer Serial No. | National Board No. | Other Identification | Year Built | Repaired, Replaced or Replacement | ASME Code Stamped Yes/No |
|---|---|---|---|---|---|---|---|
| 1 1/2" x 2" Nozzle Type Relief Valve | Crosby Valve & Gage | N59380-00-0006 | N/A | 025-83508 (Removed from 3PSV9226 on MO 01110068) | 1978 | — | Yes |
| Disc | Crosby Valve & Gage | N91241-47-0084, Ht. #11810-1-1041 | N/A | RSO-0439-01, Part #N91241 Stellite 6B | N/A | Replacement | No |
| Spring | Crosby Valve & Gage | NX3055-0081, Ht. #03482 | N/A | RSO-5278-85, Part #NX3055 A313 316 | N/A | Replacement | No |
| Spring Washers (2) | Crosby Valve & Gage | N90982-52-0447, N90982-52-0450, Ht. #1810-2-1040 | N/A | RSO-1020-84, Part #N90982 Stellite 6B | N/A | Replacement | No |

7. Description of Work:

The spare relief valve (s/n N59380-00-0006) that was removed from plant location 3PSV9226 on MO 01110068 was inspected and found to need a new disc, spring and spring washers. The disc, spring and spring washers were replaced with in-kind replacements and the valve was bench tested and returned to the warehouse for restocking.

8. Tests Conducted: N/A Pressure: N/A Temp: N/A

Note Supplemental sheets in the form of lists, sketches, or drawings may be used provided (1) size is 8 1/2 in. x 11 in., (2) information in Items 1 through 6 on this report is included on each sheet, (3) each sheet is numbered and the number of sheets is recorded at the top of this form, and (4) each sheet is initialed and dated by the Owner or Owner's designee and the AIA.

# FORM NIS-2 (back)

9. Remarks: None

(Applicable Manufacturer's Data Reports are available on-site)

## CERTIFICATE OF COMPLIANCE

We certify that the statements made in the report are correct and this **replacement** conforms to the rules of the ASME Code, Section XI.
repair or replacement

Type Code Symbol Stamp: N/A

Certificate of Authorizaton No: N/A  Expiration Date: N/A

Signed. [signature] Supervising ASME Codes Engineer Date: 7/17/02
Owner or Owner's Designee, Title

## CERTIFICATE OF INSPECTION

I, the undersigned holding a valid commission issued by the National Board of Boiler and Pressure Vessel Inspectors and the State or Province of **California**, and employed by **Factory Mutual Insurance Company** of **Johnston, Rhode Island** have inspected the components described in this Owner's Report during the period 11/02/01 to 07/17/02, and state that to the best of my knowledge and belief, the Owner has performed examinations and taken corrective measures described in this Owner's Report in accordance with the requirements of the ASME Code, Section XI.

By signing this certificate, neither the Inspector nor his employer makes any warranty, expressed or implied, concerning the examinations and corrective measures described in this Owner's Report. Furthermore, neither the Inspector nor his employer shall be liable in any manner for any personal injury or property damage or a loss of any kind arising from or connected with this inspection.

[signature] Commissions 1862 California
Inspector's Signature  National Board, State, Province, and Endorsements

Date July 17/02

WO- 01110150000

# FORM NIS-2 OWNER'S REPORT FOR REPAIRS OR REPLACEMENTS

As Required by the Provisions of the ASME Code Section XI

1. Owner: Southern California Edison Company
2244 Walnut Grove Avenue
Rosemead, California 91770

Unit: A
MO: 01110333000
Rspec: ASME SECTION XI DATA-0460
PID: N/A
N5: N/A

2. Plant: San Onofre Nuclear Generating Station
San Clemente, California 92674-012

3. Work Performed by: Southern California Edison Company

Type Code Symbol Stamp: N/A
Authorization No: N/A
Expiration Date: N/A

4. Identification of System: Chemical and Volume Control

5. (a) Applicable Construction Code: ASME Section III, Class 2, 1974 Edition, Summer 74 Addenda; Code Case: None

(b) Applicable Edition of Section XI Utilized for Repairs or Replacements: 1989 Edition, No Addenda

6. Identification of Components Repaired or Replaced and Replacement Components:

| Name of Component | Name of Manufacturer | Manufacturer Serial No. | National Board No. | Other Identification | Year Built | Repaired, Replaced or Replacement | ASME Code Stamped Yes/No |
|---|---|---|---|---|---|---|---|
| 1 1/2" x 2" Nozzle Type Relief Valve | Crosby Valve & Gage | N59380-00-0009 | N/A | 025-83508 (removed from 3PSV9226 on MO 01110068) | 1985 | — | Yes |
| Spring & Washer Assembly | Crosby Valve & Gage | Ht. #03482/ 1810-0-1060 | N/A | RSO-3588-85, A313 Tp 316/ Stellite 6B | N/A | Replacement | No |

7. Description of Work:

The spare relief valve (s/n N59380-00-0009) that was removed from plant location 3PSV9226 on MO 01110068 was inspected and found to need a new spring and washer assembly. The spring and washer assembly was replaced with an in-kind replacement and the valve was bench tested and returned to the warehouse for restocking.

8. Tests Conducted: N/A Pressure: N/A Temp: N/A

Note Supplemental sheets in the form of lists, sketches, or drawings may be used provided (1) size is 8 1/2 in x 11 in., (2) information in Items 1 through 6 on this report is included on each sheet, (3) each sheet is numbered and the number of sheets is recorded at the top of this form, and (4) each sheet is initialed and dated by the Owner or Owner's designee and the AIA.

# FORM NIS-2 (back)

9. Remarks: None.

(Applicable Manufacturer's Data Reports are available on-site)

CERTIFICATE OF COMPLIANCE

We certify that the statements made in the report are correct and this **replacement** conforms to the rules of the ASME Code, Section XI.
repair or replacement

Type Code Symbol Stamp: N/A

Certificate of Authorizaton No: N/A  Expiration Date: N/A

Signed: _____ Supervising ASME Codes Engineer Date: 1/9/02
Owner or Owner's Designee, Title

CERTIFICATE OF INSPECTION

I, the undersigned holding a valid commission issued by the National Board of Boiler and Pressure Vessel Inspectors and the State or Province of **California**, and employed by **Factory Mutual Insurance Company** of **Johnston, Rhode Island** have inspected the components described in this Owner's Report during the period 11/06/01 to 01/11/02, and state that to the best of my knowledge and belief, the Owner has performed examinations and taken corrective measures described in this Owner's Report in accordance with the requirements of the ASME Code, Section XI.

By signing this certificate, neither the Inspector nor his employer makes any warranty, expressed or implied, concerning the examinations and corrective measures described in this Owner's Report. Furthermore, neither the Inspector nor his employer shall be liable in any manner for any personal injury or property damage or a loss of any kind arising from or connected with this inspection.

_____ Commissions 1862 California
Inspector's Signature  National Board, State, Province, and Endorsements

Date Jan. 11, 2002

WO 01110333000

# FORM NIS-2 OWNER'S REPORT FOR REPAIRS OR REPLACEMENTS

As Required by the Provisions of the ASME Code Section XI

1. Owner: Southern California Edison Company
2244 Walnut Grove Avenue
Rosemead, California 91770

Unit: 2
MO: 02011627000
Rspec: ASME SECTION XI DATA-0207
PID: 40141D (C5)
N5: S2-1201-4

2. Plant: San Onofre Nuclear Generating Station
San Clemente, California 92674-0128

3. Work Performed by: Southern California Edison Company

Type Code Symbol Stamp: N/A
Authorization No: N/A
Expiration Date: N/A

4. Identification of System: Safety Injection and Shutdown Cooling

5. (a) Applicable Construction Code: ASME Section III, Class 2, 1974 Edition, Summer 1974 Addenda; Code Case: None

(b) Applicable Edition of Section XI Utilized for Repairs or Replacements: 1989 Edition, No Addenda

6. Identification of Components Repaired or Replaced and Replacement Components:

| Name of Component | Name of Manufacturer | Manufacturer Serial No. | National Board No. | Other Identification | Year Built | Repaired, Replaced or Replacement | ASME Code Stamped Yes/No |
|---|---|---|---|---|---|---|---|
| 6" x 8" Relief Valve (L-Top) | Crosby Valve & Gage | N60061-00-0001 | N/A | 2PSV9349 | 1978 | Replaced | Yes |
| 6" x 8" Relief Valve (L-Top) | Crosby Valve & Gage | N60061-00-0002 | N/A | Mat Code 026-44409 (Rebuilt under MO 00021515) | 1978 | Replacement | Yes |

7. Description of Work:

Replaced the relief valve in plant position 2PSV9349 with a rebuilt and tested spare valve (S/N N60061-00-0002). The removed valve (S/N N60061-00-0001) was placed in the rebuild program (to be rebuilt under MO 02061182).

8. Tests Conducted: System Functional Pressure Test Pressure: NOP Temp: N/A

See: AR 020100957-25

Note: Supplemental sheets in the form of lists, sketches, or drawings may be used provided (1) size is 8 1/2 in. x 11 in., (2) information in Items 1 through 6 on this report is included on each sheet, (3) each sheet is numbered and the number of sheets is recorded at the top of this form, and (4) each sheet is initialed and dated by the Owner or Owner's designee and the AIA.

# FORM NIS-2 (back)

9. Remarks: None.

(Applicable Manufacturer's Data Reports are available on-site)

## CERTIFICATE OF COMPLIANCE

We certify that the statements made in the report are correct and this **replacement** conforms to the rules of the ASME Code, Section XI.
repair or replacement

Type Code Symbol Stamp: N/A

Certificate of Authorizaton No: N/A  Expiration Date: N/A

Signed: _____ Supervising ASME Codes Engineer Date: 7/29/02
Owner or Owner's Designee, Title

## CERTIFICATE OF INSPECTION

I, the undersigned holding a valid commission issued by the National Board of Boiler and Pressure Vessel Inspectors and the State or Province of **California**, and employed by **Factory Mutual Insurance Company** of **Johnston, Rhode Island** have inspected the components described in this Owner's Report during the period 05/20/02 to 07/30/02, and state that to the best of my knowledge and belief, the Owner has performed examinations and taken corrective measures described in this Owner's Report in accordance with the requirements of the ASME Code, Section XI.

By signing this certificate, neither the Inspector nor his employer makes any warranty, expressed or implied, concerning the examinations and corrective measures described in this Owner's Report. Furthermore, neither the Inspector nor his employer shall be liable in any manner for any personal injury or property damage or a loss of any kind arising from or connected with this inspection.

_____ Commissions 1867 California
Inspector's Signature  National Board, State, Province, and Endorsements

Date July 30, 2002

WO: 02011627000

# FORM NIS-2 OWNER'S REPORT FOR REPAIRS OR REPLACEMENTS

As Required by the Provisions of the ASME Code Section XI

1. Owner: Southern California Edison Company
2244 Walnut Grove Avenue
Rosemead, California 91770

Unit: 2
MO: 02012715000
Rspec: GEN-106 R2
PID: 40111A
N5: S2-1201-3

2. Plant: San Onofre Nuclear Generating Station
San Clemente, California 92674-012

3. Work Performed by: Southern California Edison Company

Type Code Symbol Stamp: N/A
Authorization No: N/A
Expiration Date: N/A

4. Identification of System: Reactor Coolant

5. (a) Applicable Construction Code: ASME Section III, Class 1, 1971 Ed., W.'71 Add. (Pump), 1980 Ed., S.'82 Add (Seal Cartridge), Code Cases: None

5. (b) Applicable Edition of Section XI Utilized for Repairs or Replacements: 1989 Edition, No Addenda

6. Identification of Components Repaired or Replaced and Replacement Components:

| Name of Component | Name of Manufacturer | Manufacturer Serial No | National Board No. | Other Identification | Year Built | Repaired, Replaced or Replacement | ASME Code Stamped Yes/No |
|---|---|---|---|---|---|---|---|
| 36" Reactor Coolant Pump | Byron Jackson | 701-N-0559 | N/A | S21201MP002 | 1978 | — | Yes |
| Mechanical Seal Cartridge | Bingham-Willamette | 1714880-3 | 1172 | SO23-CART-#22 | 1986 | Replaced | Yes |
| Mechanical Seal Cartridge | Bingham-Willamette | 1659057-11 | 1219 | SO23-CART-#25, Rebuilt on MO 01021217 | 1986 | Replacement | Yes |

7. Description of Work:

The RCP seal cartridge was replaced with a spare which had been rebuilt in accordance with the SONGS rebuild program. The removed seal cartridge was placed into the SONGS rebuild program to be rebuilt under MO 02030916.

8. Tests Conducted: System Leakage Pressure Test Pressure: NOP Temp: NOT

VT-2 performed per Procedure SO23-XVII-3.1.1

Note Supplemental sheets in the form of lists, sketches, or drawings may be used provided (1) size is 8 1/2 in. x 11 in., (2) information in Items 1 through 6 on this report is included on each sheet, (3) each sheet is numbered and the number of sheets is recorded at the top of this form, and (4) each sheet is initialed and dated by the Owner or Owner's designee and the AIA.

# FORM NIS-2 (back)

9. Remarks: None.

(Applicable Manufacturer's Data Reports are available on-site)

## CERTIFICATE OF COMPLIANCE

We certify that the statements made in the report are correct and this **replacement** conforms to the rules of the ASME Code, Section XI.
repair or replacement

Type Code Symbol Stamp: N/A

Certificate of Authorizaton No: N/A

Expiration Date: N/A

Signed: [signature] Supervising ASME Codes Engineer Date: 8/05/02
Owner or Owner's Designee, Title

## CERTIFICATE OF INSPECTION

I, the undersigned holding a valid commission issued by the National Board of Boiler and Pressure Vessel Inspectors and the State or Province of **California**, and employed by **Factory Mutual Insurance Company** of **Johnston, Rhode Island** have inspected the components described in this Owner's Report during the period 02/12/02 to 08/06/02, and state that to the best of my knowledge and belief, the Owner has performed examinations and taken corrective measures described in this Owner's Report in accordance with the requirements of the ASME Code, Section XI.

By signing this certificate, neither the Inspector nor his employer makes any warranty, expressed or implied, concerning the examinations and corrective measures described in this Owner's Report. Furthermore, neither the Inspector nor his employer shall be liable in any manner for any personal injury or property damage or a loss of any kind arising from or connected with this inspection.

[signature] Commissions 1862 California
Inspector's Signature National Board, State, Province, and Endorsements

Date Aug. 6, 2002

WO: 02012715000

# FORM NIS-2 OWNER'S REPORT FOR REPAIRS OR REPLACEMENTS

As Required by the Provisions of the ASME Code Section XI

1. Owner: Southern California Edison Company
2244 Walnut Grove Avenue
Rosemead, California 91770

Unit: 2
MO: 02021404000
Rspec: 991200976-10
PID: 40124B (C5)
N5: S2-1208-10

2. Plant: San Onofre Nuclear Generating Station
San Clemente, California 92674-012

3. Work Performed by: Southern California Edison Company

Type Code Symbol Stamp: N/A
Authorization No: N/A
Expiration Date: N/A

4. Identification of System: Chemical and Volume Control

5. (a) Applicable Construction Code: ASME Section III, Class 2 (NC), 1974 Ed., S '74 Addenda; Code Case: None

(b) Applicable Edition of Section XI Utilized for Repairs or Replacements: 1989 Edition, No Addenda; 1992 Ed., No Add. (NDE); Code Case: N-416-1

6. Identification of Components Repaired or Replaced and Replacement Components:

| Name of Component | Name of Manufacturer | Manufacturer Serial No. | National Board No. | Other Identification | Year Built | Repaired, Replaced or Replacement | ASME Code Stamped Yes/No |
|---|---|---|---|---|---|---|---|
| 1 1/2" x 2" Nozzle Type Relief Valve | Crosby Valve & Gage | N59380-00-0001 | N/A | 2PSV9227 | 1977 | — | Yes |
| 2" 40S Pipe Spool | — | S2-VC-063-00B | N/A | S2-1208-ML-063 | N/A | Repaired | No |

7. Description of Work:

MO 01051488 removed the valve (s/n N59380-00-0001) in plant position 2PSV9227 due to leakage. Upon reinstallation, the valve wouldn't align with the associated discharge piping (S2-1208-ML-063). MO 02021404 cut and re-welded the pipe end to allow for proper alignment to 2PSV9227 in accordance with weld record WR2-02-017 and Repair Specification 991200976-10.

8. Tests Conducted: System Leakage Pressure Test Pressure: NOP Temp: NOT

See: AR 991200976-11

Note Supplemental sheets in the form of lists, sketches, or drawings may be used provided (1) size is 8 1/2 in. x 11 in., (2) information in Items 1 through 6 on this report is included on each sheet, (3) each sheet is numbered and the number of sheets is recorded at the top of this form, and (4) each sheet is initialed and dated by the Owner or Owner's designee and the AIA.

# FORM NIS-2 (back)

9. Remarks:

(Applicable Manufacturer's Data Reports are available on-site)

CERTIFICATE OF COMPLIANCE

We certify that the statements made in the report are correct and this repair or replacement conforms to the rules of the ASME Code, Section XI.

Type Code Symbol Stamp: N/A

Certificate of Authorizaton No: N/A Expiration Date: N/A

Signed: Supervising ASME Codes Engineer Date: 6/7/02
Owner or Owner's Designee, Title

CERTIFICATE OF INSPECTION

I, the undersigned holding a valid commission issued by the National Board of Boiler and Pressure Vessel Inspectors and the State or Province of **California**, and employed by **Factory Mutual Insurance Company** of **Johnston, Rhode Island** have inspected the components described in this Owner's Report during the period 02/21/02 to 06/10/02; and state that to the best of my knowledge and belief, the Owner has performed examinations and taken corrective measures described in this Owner's Report in accordance with the requirements of the ASME Code, Section XI.

By signing this certificate, neither the Inspector nor his employer makes any warranty, expressed or implied, concerning the examinations and corrective measures described in this Owner's Report. Furthermore, neither the Inspector nor his employer shall be liable in any manner for any personal injury or property damage or a loss of any kind arising from or connected with this inspection.

Inspector's Signature Commissions 1862 California
National Board, State, Province, and Endorsements

Date June 10, 2002

WO

# FORM NIS-2 OWNER'S REPORT FOR REPAIRS OR REPLACEMENTS

As Required by the Provisions of the ASME Code Section XI

1. Owner: Southern California Edison Company
2244 Walnut Grove Avenue
Rosemead, California 91770

Unit. 2
MO. 02031192001 02031192000
Rspec: ASME SECTION XI DATA-0205, GEN-139 R1
PID: 40124A (C6)
N5: S2-1208-8

2. Plant: San Onofre Nuclear Generating Station
San Clemente, California 92674-0128

3. Work Performed by: Southern California Edison Company

Type Code Symbol Stamp: N/A
Authorization No: N/A
Expiration Date: N/A

4. Identification of System: Chemical and Volume Control

5. (a) Applicable Construction Code: ASME Section III, Class 2, 1974 Edition, S.'74 Addenda; Code Case: None

(b) Applicable Edition of Section XI Utilized for Repairs or Replacements: 1989 Edition, No Addenda

6. Identification of Components Repaired or Replaced and Replacement Components:

| Name of Component | Name of Manufacturer | Manufacturer Serial No. | National Board No. | Other Identification | Year Built | Repaired, Replaced or Replacement | ASME Code Stamped Yes/No |
|---|---|---|---|---|---|---|---|
| 3" x 4" Relief Valve | Crosby Valve & Gage | N59379-00-0003 | N/A | 2PSV9220 | 1993 | Replaced | Yes |
| 3" x 4" Relief Valve | Crosby Valve & Gage | N59379-00-0001 | N/A | Rebuilt on MO 01081631 | 1978 | Replacement | Yes |
| 5/8"-11 All-Thread Stud | Nova Machine Products | Ht. #99694 | N/A | RSO-1811-00, SA193 Gr. B7 | N/A | Replacement | No |

7. Description of Work:

MO 02031192000 replaced the relief valve (s/n N59379-00-0003) in plant position 2PSV9220 with a tested and rebuilt spare valve (s/n N59379-00-0001) that was rebuilt under MO 01081631. MO 02031192001 replaced the inlet studs. (4) each 5" studs were cut from all-thread stock with the required markings transferred to the cut pieces in accordance with Repair Specification GEN-139 R1. The removed valve was placed into the SONGS rebuild program.

8. Tests Conducted: System Functional Pressure Test Pressure: NOP Temp: N/A

**See: AR 020100957-23**

Note: Supplemental sheets in the form of lists, sketches, or drawings may be used provided (1) size is 8 1/2 in x 11 in., (2) information in Items 1 through 6 on this report is included on each sheet, (3) each sheet is numbered and the number of sheets is recorded at the top of this form, and (4) each sheet is initialed and dated by the Owner or Owner's designee and the AIA.

## FORM NIS-2 (back)

9. Remarks: CR-3005-96 reconciles the replacement studs which were certified to ASME III-2, 1989 Ed., No Add.

(Applicable Manufacturer's Data Reports are available on-site)

### CERTIFICATE OF COMPLIANCE

We certify that the statements made in the report are correct and this **replacement** conforms to the rules of the ASME Code, Section XI.
repair or replacement

Type Code Symbol Stamp: N/A

Certificate of Authorizaton No: N/A  Expiration Date: N/A

Signed: _____ Supervising ASME Codes Engineer Date: 7/17/02
Owner or Owner's Designee, Title

### CERTIFICATE OF INSPECTION

I, the undersigned holding a valid commission issued by the National Board of Boiler and Pressure Vessel Inspectors and the State or Province of **California**, and employed by **Factory Mutual Insurance Company** of **Johnston, Rhode Island** have inspected the components described in this Owner's Report during the period 04/03/02 to 07/17/02, and state that to the best of my knowledge and belief, the Owner has performed examinations and taken corrective measures described in this Owner's Report in accordance with the requirements of the ASME Code, Section XI.

By signing this certificate, neither the Inspector nor his employer makes any warranty, expressed or implied, concerning the examinations and corrective measures described in this Owner's Report. Furthermore, neither the Inspector nor his employer shall be liable in any manner for any personal injury or property damage or a loss of any kind arising from or connected with this inspection.

_____ Commissions 1862 California
Inspector's Signature  National Board, State, Province, and Endorsements

Date July 17, 2002

WO: 02031192001

# FORM NIS-2 OWNER'S REPORT FOR REPAIRS OR REPLACEMENTS

As Required by the Provisions of the ASME Code Section XI

1. Owner: Southern California Edison Company
2244 Walnut Grove Avenue
Rosemead, California 91770

Unit: 2
MO: 02031210000
Rspec: ASME SECTION XI DATA-0252
PID: 40111D (F2)
N5: S2-1201-3-7

2. Plant: San Onofre Nuclear Generating Station
San Clemente, California 92674-0128

3. Work Performed by: Southern California Edison Company

Type Code Symbol Stamp: N/A
Authorization No: N/A
Expiration Date: N/A

4. Identification of System: Reactor Coolant

5. (a) Applicable Construction Code: ASME Section III, Class 1, 1974 Edition, No Addenda; Code Case: None

5. (b) Applicable Edition of Section XI Utilized for Repairs or Replacements: 1989 Edition, No Addenda

6. Identification of Components Repaired or Replaced and Replacement Components:

| Name of Component | Name of Manufacturer | Manufacturer Serial No. | National Board No. | Other Identification | Year Built | Repaired, Replaced or Replacement | ASME Code Stamped Yes/No |
|---|---|---|---|---|---|---|---|
| 4" 1515# Swing Check Valve | Anchor/Darling | E-3247-2-1 | N/A | S21201MU976 | 1984 | — | Yes |
| Disc | Anchor/Darling | S/N 16, Ht. #52950 | N/A | RSO-4720-85, SA182 F316L | 1985 | Replacement | Yes |

7. Description of Work:

Pressurizer spray line check valve (s/n E-3247-2-1) in plant position S21201MU976 failed its ISI test. Upon disassembly of the valve, it was discovered that the disc was damaged. The disc was replaced with an in-kind replacement disc in accordance with ASME XI Data Flag-0252.

8. Tests Conducted: System Leakage Pressure Test Pressure: NOP Temp: NOT

VT-2 performed per Procedure SO23-XVII-3.1.1

Note. Supplemental sheets in the form of lists, sketches, or drawings may be used provided (1) size is 8 1/2 in. x 11 in., (2) information in Items 1 through 6 on this report is included on each sheet, (3) each sheet is numbered and the number of sheets is recorded at the top of this form, and (4) each sheet is initialed and dated by the Owner or Owner's designee and the AIA.

# FORM NIS-2 (back)

9. Remarks: None.

(Applicable Manufacturer's Data Reports are available on-site)

## CERTIFICATE OF COMPLIANCE

We certify that the statements made in the report are correct and this **replacement** conforms to the rules of the ASME Code, Section XI.
repair or replacement

Type Code Symbol Stamp: N/A

Certificate of Authorizaton No: N/A  Expiration Date: N/A

Signed: _____ Supervising ASME Codes Engineer Date: 7/17/02
Owner or Owner's Designee, Title

## CERTIFICATE OF INSPECTION

I, the undersigned holding a valid commission issued by the National Board of Boiler and Pressure Vessel Inspectors and the State or Province of **California**, and employed by **Factory Mutual Insurance Company** of **Johnston, Rhode Island** have inspected the components described in this Owner's Report during the period 05/24/02 to 07/17/02, and state that to the best of my knowledge and belief, the Owner has performed examinations and taken corrective measures described in this Owner's Report in accordance with the requirements of the ASME Code, Section XI.

By signing this certificate, neither the Inspector nor his employer makes any warranty, expressed or implied, concerning the examinations and corrective measures described in this Owner's Report. Furthermore, neither the Inspector nor his employer shall be liable in any manner for any personal injury or property damage or a loss of any kind arising from or connected with this inspection.

_____ Commissions 1862 California
Inspector's Signature  National Board, State, Province, and Endorsements

Date July 17, 2002

WO: 02031210000

# FORM NIS-2 OWNER'S REPORT FOR REPAIRS OR REPLACEMENTS

As Required by the Provisions of the ASME Code Section XI

1. Owner: Southern California Edison Company
2244 Walnut Grove Avenue
Rosemead, California 91770

Unit: 2
MO: 02040446000
Rspec: GEN-106 R2
PID: 40111A
N5: S2-1201-3

2. Plant: San Onofre Nuclear Generating Station
San Clemente, California 92674-012

3. Work Performed by: Southern California Edison Company

Type Code Symbol Stamp: N/A
Authorization No: N/A
Expiration Date: N/A

4. Identification of System: Reactor Coolant

5. (a) Applicable Construction Code: ASME Section III, Class 1, 1971 Ed., W.'71 Add. (Pump), 1980 Ed., S.'82 Add. (Seal Cartridge), Code Cases: None

5. (b) Applicable Edition of Section XI Utilized for Repairs or Replacements: 1989 Edition, No Addenda

6. Identification of Components Repaired or Replaced and Replacement Components:

| Name of Component | Name of Manufacturer | Manufacturer Serial No. | National Board No. | Other Identification | Year Built | Repaired, Replaced or Replacement | ASME Code Stamped Yes/No |
|---|---|---|---|---|---|---|---|
| 36" Reactor Coolant Pump | Byron Jackson | 701-N-0558 | N/A | S21201MP001 | 1977 | — | Yes |
| Mechanical Seal Cartridge | Bingham-Willamette | 1659057-2 | 1173 | SO23-CART-#23 | 1986 | Replaced | Yes |
| Mechanical Seal Cartridge | Bingham-Willamette | 1714880-2 | 1171 | SO23-CART-#21, Rebuilt on MO 01021218 | 1986 | Replacement | Yes |

7. Description of Work:

The RCP seal cartridge was replaced with a spare which had been rebuilt in accordance with the SONGS rebuild program. The removed seal cartridge was placed into the SONGS rebuild program to be rebuilt under MO 02041358.

8. Tests Conducted: System Leakage Pressure Test Pressure: NOP Temp: NOT

VT-2 performed per Procedure SO23-XVII-3.1.1

Note Supplemental sheets in the form of lists, sketches, or drawings may be used provided (1) size is 8 1/2 in x 11 in., (2) information in Items 1 through 6 on this report is included on each sheet, (3) each sheet is numbered and the number of sheets is recorded at the top of this form, and (4) each sheet is initialed and dated by the Owner or Owner's designee and the AIA.

# FORM NIS-2 (back)

9. Remarks: None.

(Applicable Manufacturer's Data Reports are available on-site)

## CERTIFICATE OF COMPLIANCE

We certify that the statements made in the report are correct and this **replacement** conforms to the rules of the ASME Code, Section XI.
repair or replacement

Type Code Symbol Stamp: N/A

Certificate of Authorizaton No: N/A  Expiration Date: N/A

Signed: _____ Supervising ASME Codes Engineer Date: 8/05/02
Owner or Owner's Designee, Title

## CERTIFICATE OF INSPECTION

I, the undersigned holding a valid commission issued by the National Board of Boiler and Pressure Vessel Inspectors and the State or Province of **California**, and employed by **Factory Mutual Insurance Company** of **Johnston, Rhode Island** have inspected the components described in this Owner's Report during the period 04/24/02 to 08/06/02, and state that to the best of my knowledge and belief, the Owner has performed examinations and taken corrective measures described in this Owner's Report in accordance with the requirements of the ASME Code, Section XI.

By signing this certificate, neither the Inspector nor his employer makes any warranty, expressed or implied, concerning the examinations and corrective measures described in this Owner's Report. Furthermore, neither the Inspector nor his employer shall be liable in any manner for any personal injury or property damage or a loss of any kind arising from or connected with this inspection.

_____ Commissions 1862 California
Inspector's Signature  National Board, State, Province, and Endorsements

Date Aug. 6, 2002

WO 02040446000

# FORM NIS-2 OWNER'S REPORT FOR REPAIRS OR REPLACEMENTS

As Required by the Provisions of the ASME Code Section XI

1. Owner: Southern California Edison Company
2244 Walnut Grove Avenue
Rosemead, California 91770

Unit: 2
MO: 02040447000
Rspec: GEN-106 R2
PID: 40111A
N5: S2-1201-3

2. Plant: San Onofre Nuclear Generating Station
San Clemente, California 92674-012

3. Work Performed by: Southern California Edison Company

Type Code Symbol Stamp: N/A
Authorization No: N/A
Expiration Date: N/A

4. Identification of System: Reactor Coolant

5. (a) Applicable Construction Code: ASME Section III, Class 1, 1971 Ed., W.'71 Add. (Pump), 1980 Ed., S.'82 Add. (Seal Cartridge), Code Cases: None

5. (b) Applicable Edition of Section XI Utilized for Repairs or Replacements: 1989 Edition, No Addenda

6. Identification of Components Repaired or Replaced and Replacement Components:

| Name of Component | Name of Manufacturer | Manufacturer Serial No. | National Board No. | Other Identification | Year Built | Repaired, Replaced or Replacement | ASME Code Stamped Yes/No |
|---|---|---|---|---|---|---|---|
| 36" Reactor Coolant Pump | Byron Jackson | 701-N-0557 | N/A | S21201MP004 | 1977 | — | Yes |
| Mechanical Seal Cartridge | Bingham-Willamette | 1659057-6 | 1174 | SO23-CART-#24 | 1986 | Replaced | Yes |
| Mechanical Seal Cartridge | Bingham-Willamette | 1714880-8 | 1168 | SO23-CART-#18, Rebuilt on MO 01021219 | 1986 | Replacement | Yes |

7. Description of Work:

The RCP seal cartridge was replaced with a spare which had been rebuilt in accordance with the SONGS rebuild program. The removed seal cartridge was placed into the SONGS rebuild program to be rebuilt under MO 02041359.

8. Tests Conducted: System Leakage Pressure Test Pressure: NOP Temp: NOT

VT-2 performed per Procedure SO23-XVII-3.1.1

Note: Supplemental sheets in the form of lists, sketches, or drawings may be used provided (1) size is 8 1/2 in. x 11 in., (2) information in Items 1 through 6 on this report is included on each sheet, (3) each sheet is numbered and the number of sheets is recorded at the top of this form, and (4) each sheet is initialed and dated by the Owner or Owner's designee and the AIA.

# FORM NIS-2 (back)

9. Remarks: None

(Applicable Manufacturer's Data Reports are available on-site)

## CERTIFICATE OF COMPLIANCE

We certify that the statements made in the report are correct and this **replacement** conforms to the rules of the ASME Code, Section XI.
repair or replacement

Type Code Symbol Stamp: N/A

Certificate of Authorizaton No: N/A

Expiration Date: N/A

Signed: _____ Supervising ASME Codes Engineer Date: 8/5/02
Owner or Owner's Designee, Title

## CERTIFICATE OF INSPECTION

I, the undersigned holding a valid commission issued by the National Board of Boiler and Pressure Vessel Inspectors and the State or Province of **California**, and employed by **Factory Mutual Insurance Company** of **Johnston, Rhode Island** have inspected the components described in this Owner's Report during the period 04/24/02 to 08/06/02, and state that to the best of my knowledge and belief, the Owner has performed examinations and taken corrective measures described in this Owner's Report in accordance with the requirements of the ASME Code, Section XI.

By signing this certificate, neither the Inspector nor his employer makes any warranty, expressed or implied, concerning the examinations and corrective measures described in this Owner's Report. Furthermore, neither the Inspector nor his employer shall be liable in any manner for any personal injury or property damage or a loss of any kind arising from or connected with this inspection.

_____ Commissions 1862 California
Inspector's Signature National Board, State, Province, and Endorsements

Date Aug. 6, 2002

WO 02040447000

# FORM NIS-2 OWNER'S REPORT FOR REPAIRS OR REPLACEMENTS

As Required by the Provisions of the ASME Code Section XI

1. Owner: Southern California Edison Company
2244 Walnut Grove Avenue
Rosemead, California 91770

Unit: 2
MO: 02040871000
Rspec: ASME SECTION XI DATA-0561, 007-02
PID: 40111B (E6)
N5: S2-1201-2

2. Plant: San Onofre Nuclear Generating Station
San Clemente, California 92674-012

3. Work Performed by: Southern California Edison Company

Type Code Symbol Stamp: N/A
Authorization No: N/A
Expiration Date: N/A

4. Identification of System: Reactor Coolant

5. (a) Applicable Construction Code: ASME Section III, Class 1, 1971 Edition, Summer 1971 Addenda; Code Cases: 1361-2, 1588, 1820 & N-177

5. (b) Applicable Edition of Section XI Utilized for Repairs or Replacements: 1989 Edition, No Addenda

6. Identification of Components Repaired or Replaced and Replacement Components:

| Name of Component | Name of Manufacturer | Manufacturer Serial No. | National Board No. | Other Identification | Year Built | Repaired, Replaced or Replacement | ASME Code Stamped Yes/No |
|---|---|---|---|---|---|---|---|
| Pressurizer Heater | Watlow/ C.E. | 36 | N/A | S21201ME625 | 1981 | Replaced | Yes |
| Pressurizer Heater | Watlow/ C.E. | 4 | N/A | RSO-4723-85-02 | 1986 | Replacement | Yes |

7. Description of Work:

A replacement pressurizer heater was installed in plant location S21201ME625 (at heater sleeve H1) in accordance with Repair Specification 007-02, ASME X1 DATA-0561 and Weld Record WR2-02-102. Post weld NDE examination (2PT-043-02) was performed with satisfactory results.

8. Tests Conducted: System Leakage Pressure Test Pressure: NOP Temp: NOT

VT-2 performed per Procedure SO23-XVII-3.1.1

Note: Supplemental sheets in the form of lists, sketches, or drawings may be used provided (1) size is 8 1/2 in. x 11 in., (2) information in Items 1 through 6 on this report is included on each sheet, (3) each sheet is numbered and the number of sheets is recorded at the top of this form, and (4) each sheet is initialed and dated by the Owner or Owner's designee and the AIA.

# FORM NIS-2 (back)

9. Remarks: None.

(Applicable Manufacturer's Data Reports are available on-site)

## CERTIFICATE OF COMPLIANCE

We certify that the statements made in the report are correct and this **replacement** conforms to the rules of the ASME Code, Section XI.
repair or replacement

Type Code Symbol Stamp: N/A

Certificate of Authorizaton No: N/A

Expiration Date: N/A

Signed: _____ Supervising ASME Codes Engineer Date: 7/3/02
Owner or Owner's Designee, Title

## CERTIFICATE OF INSPECTION

I, the undersigned holding a valid commission issued by the National Board of Boiler and Pressure Vessel Inspectors and the State or Province of **California**, and employed by **Factory Mutual Insurance Company** of **Johnston, Rhode Island** have inspected the components described in this Owner's Report during the period 5/23/02 to 7/12/02, and state that to the best of my knowledge and belief, the Owner has performed examinations and taken corrective measures described in this Owner's Report in accordance with the requirements of the ASME Code, Section XI.

By signing this certificate, neither the Inspector nor his employer makes any warranty, expressed or implied, concerning the examinations and corrective measures described in this Owner's Report. Furthermore, neither the Inspector nor his employer shall be liable in any manner for any personal injury or property damage or a loss of any kind arising from or connected with this inspection.

_____ Commissions 1862 California
Inspector's Signature
National Board, State, Province, and Endorsements

Date July 12, 2002.

WO 02040871000

# FORM NIS-2 OWNER'S REPORT FOR REPAIRS OR REPLACEMENTS

As Required by the Provisions of the ASME Code Section XI

1. Owner: Southern California Edison Company
2244 Walnut Grove Avenue
Rosemead, California 91770

Unit: 2
MO: 02050119001 02050119000
Rspec: GEN-107b R2, 005-02 R1
PID: 40111A
N5: N/A

2. Plant: San Onofre Nuclear Generating Station
San Clemente, California 92674-0128

3. Work Performed by: Southern California Edison Company

Type Code Symbol Stamp: N/A
Authorization No: N/A
Expiration Date: N/A

4. Identification of System: Reactor Coolant

5. (a) Applicable Construction Code: ASME Section III, Class 1, 1971 Edition, W.'73 Addenda; Code Case: None

5. (b) Applicable Edition of Section XI Utilized for Repairs or Replacements: 1989 Edition, No Addenda

6. Identification of Components Repaired or Replaced and Replacement Components:

| Name of Component | Name of Manufacturer | Manufacturer Serial No | National Board No. | Other Identification | Year Built | Repaired, Replaced or Replacement | ASME Code Stamped Yes/No |
|---|---|---|---|---|---|---|---|
| CEDM #66 Vent Valve Assembly | ABB Combustion Engineering | 1370-104 | N/A | S21104CEDM #66 | 1978 | Repaired | Yes |
| Housing Nut | ABB Combustion Engineering | S/N 415, Ht. #MT13223 | N/A | RSO-1391-97, SA479 T316 | N/A | Replacement | Yes |

7. Description of Work:

Replaced the housing seal nut on CEDM #66 vent valve assembly in accordance with Repair Specification GEN-107b Rev. 2. The ball seal housing to housing nut seal weld was removed and the weld prep area was restored in accordance with Repair Specification 005-02 Rev. 1. NDE examination 2PT-095-02 was performed on the ball valve seal housing newly machined surface with satisfactory results. Note: No PT examination could be performed after machining of detail "z" (step X12 of revision of the MO) due to inaccessibility (see attachments included in work package).

8. Tests Conducted: System Leakage Pressure Test Pressure: NOP Temp: NOT

VT-2 performed per Procedure SO23-XVII-3.1.1

Note Supplemental sheets in the form of lists, sketches, or drawings may be used provided (1) size is 8 1/2 in. x 11 in., (2) information in Items 1 through 6 on this report is included on each sheet, (3) each sheet is numbered and the number of sheets is recorded at the top of this form, and (4) each sheet is initialed and dated by the Owner or Owner's designee and the AIA.

# FORM NIS-2 (back)

9. Remarks: None.

(Applicable Manufacturer's Data Reports are available on-site)

## CERTIFICATE OF COMPLIANCE

We certify that the statements made in the report are correct and this **repair and replacement** conforms to the rules of the ASME Code, Section XI.
repair or replacement

Type Code Symbol Stamp: N/A

Certificate of Authorizaton No: N/A  Expiration Date: N/A

Signed: [signature] Supervising ASME Codes Engineer Date: 8/15/02
Owner or Owner's Designee, Title

## CERTIFICATE OF INSPECTION

I, the undersigned holding a valid commission issued by the National Board of Boiler and Pressure Vessel Inspectors and the State or Province of **California**, and employed by **Factory Mutual Insurance Company** of **Johnston, Rhode Island** have inspected the components described in this Owner's Report during the period 06/06/02 to 08/16/02, and state that to the best of my knowledge and belief, the Owner has performed examinations and taken corrective measures described in this Owner's Report in accordance with the requirements of the ASME Code, Section XI.

By signing this certificate, neither the Inspector nor his employer makes any warranty, expressed or implied, concerning the examinations and corrective measures described in this Owner's Report. Furthermore, neither the Inspector nor his employer shall be liable in any manner for any personal injury or property damage or a loss of any kind arising from or connected with this inspection.

[signature] Commissions 1862 California
Inspector's Signature  National Board, State, Province, and Endorsements

Date Aug. 16, 2002

WO 02050119001

# FORM NIS-2 OWNER'S REPORT FOR REPAIRS OR REPLACEMENTS

As Required by the Provisions of the ASME Code Section XI

1. Owner: Southern California Edison Company
2244 Walnut Grove Avenue
Rosemead, California 91770

Unit: N
MO: 02050624000
Rspec: ASME SECTION XI DATA-0389
PID: N/A
N5: N/A

2. Plant: San Onofre Nuclear Generating Station
San Clemente, California 92674-012

3. Work Performed by: Southern California Edison Company

Type Code Symbol Stamp: N/A
Authorization No: N/A
Expiration Date: N/A

4. Identification of System: N/A - Spare

5. (a) Applicable Construction Code: ASME Section III, Class 2, 1974 Edition, Summer 1974 Addenda; Code Case: None

(b) Applicable Edition of Section XI Utilized for Repairs or Replacements: 1989 Edition, No Addenda

6. Identification of Components Repaired or Replaced and Replacement Components:

| Name of Component | Name of Manufacturer | Manufacturer Serial No. | National Board No. | Other Identification | Year Built | Repaired, Replaced or Replacement | ASME Code Stamped Yes/No |
|---|---|---|---|---|---|---|---|
| 1 1/2" x 2" Nozzle Type Relief Valve | Crosby Valve & Gage | N59381-00-0003 | N/A | 026-27164 SN# N59381-00-0003 | 1984 | — | Yes |
| Disc | Crosby Valve & Gage | N91232-33-0006, Ht. #1810-0-1059 | N/A | RSO-5050-85, Stellite Alloy 6B | N/A | Replacement | No |
| Nozzle | Crosby Valve & Gage | N91231-37-0010 | N/A | RSO-0451-92, SA479 316L | 1985 | Replacement | Yes |

7. Description of Work:

Replaced the disc and nozzle with in-kind replacements on spare valve (s/n N59381-00-0003) and returned to warehouse stock. Note: Valve to be installed in plant positon 2PSV9321 under MO 01050319.

8. Tests Conducted: N/A  Pressure: N/A  Temp: N/A

Note. Supplemental sheets in the form of lists, sketches, or drawings may be used provided (1) size is 8 1/2 in. x 11 in., (2) information in Items 1 through 6 on this report is included on each sheet, (3) each sheet is numbered and the number of sheets is recorded at the top of this form, and (4) each sheet is initialed and dated by the Owner or Owner's designee and the AIA.

# FORM NIS-2 (back)

9. Remarks: None.

(Applicable Manufacturer's Data Reports are available on-site)

CERTIFICATE OF COMPLIANCE

We certify that the statements made in the report are correct and this **replacement** conforms to the rules of the ASME Code, Section XI.
repair or replacement

Type Code Symbol Stamp: N/A

Certificate of Authorizaton No: N/A  Expiration Date: N/A

Signed: _____ Supervising ASME Codes Engineer Date: 5/31/02
Owner or Owner's Designee, Title

CERTIFICATE OF INSPECTION

I, the undersigned holding a valid commission issued by the National Board of Boiler and Pressure Vessel Inspectors and the State or Province of **California**, and employed by **Factory Mutual Insurance Company** of **Johnston, Rhode Island** have inspected the components described in this Owner's Report during the period 05/14/02 to 06/04/02, and state that to the best of my knowledge and belief, the Owner has performed examinations and taken corrective measures described in this Owner's Report in accordance with the requirements of the ASME Code, Section XI.

By signing this certificate, neither the Inspector nor his employer makes any warranty, expressed or implied, concerning the examinations and corrective measures described in this Owner's Report. Furthermore, neither the Inspector nor his employer shall be liable in any manner for any personal injury or property damage or a loss of any kind arising from or connected with this inspection.

_____ Commissions 1862 California
Inspector's Signature  National Board, State, Province, and Endorsements

Date June 4, 2002

WO: 02050824000

# FORM NIS-2 OWNER'S REPORT FOR REPAIRS OR REPLACEMENTS

As Required by the Provisions of the ASME Code Section XI

1. Owner: Southern California Edison Company
2244 Walnut Grove Avenue
Rosemead, California 91770

Unit: 2
MO: 02051085000
Rspec: 020501145-04
PID: 40123A (E7)
N5: S2-1201-3-9

2. Plant: San Onofre Nuclear Generating Station
San Clemente, California 92674-0128

3. Work Performed by: Southern California Edison Company

Type Code Symbol Stamp: N/A
Authorization No: N/A
Expiration Date: N/A

4. Identification of System: Reactor Coolant

5. (a) Applicable Construction Code: ASME Section III, Class 1, 1971 Ed., S. '73 Addenda; Code Case: None

5. (b) Applicable Edition of Section XI Utilized for Repairs or Replacements: 1989 Edition, No Addenda; 1992 Edition, No Add. (VT-2); Code Case: N-416-1

6. Identification of Components Repaired or Replaced and Replacement Components:

| Name of Component | Name of Manufacturer | Manufacturer Serial No. | National Board No. | Other Identification | Year Built | Repaired, Replaced or Replacement | ASME Code Stamped Yes/No |
|---|---|---|---|---|---|---|---|
| 2" 1513# Y-Check Valve | BW/IP International | 901-L-0129 | N/A | S21201MU021 | 1992 | Replaced | Yes |
| 2" 1513 Y-Type Check Valve | Flowserve | E758R-1-1 | N/A | RSO-1012-02, Mark #559 | 2002 | Replacement | Yes |
| 2" NPS Sch. 160 Seamless Pipe | Consolidated Power Supply | Ht. #3801H | N/A | RSO-1351-97, SA376 Tp. 316 (CR-2002-96) | N/A | Replacement | No |

7. Description of Work:

Replaced the charging line BW/IP 2" Y-Type check valve (s/n 901-L-0129) in plant location S21201MU021 with a different style Flowserve 2" Y-Type check valve (s/n E758R-1-1). The new style valve replacement included installing a new pipe nipple. The valve and pipe nipple replacement was performed in accordance with weld records WR2-02-105, WR2-02-106, and WR2-02-107 R0 and R1. NDE examinations on the new pipe, valve end preps, and installed piping were performed with satisfactory results. Installed a body-to-cover sealweld and performed a NDE examination on the final sealweld with satisfactory results. Sealweld and final NDE were performed in accordance with weld record WR2-02-109. Valve installation and sealweld performed in accordance with Repair Specification 020501145-04.

8. Tests Conducted: System Leakage Pressure Test Pressure: NOP Temp: NOT

VT-2 performed per Procedure SO23-XVII-3.1.1

**This test was performed in lieu of a hydrostatic pressure test as allowed under Code Case N-416-1.**

Note Supplemental sheets in the form of lists, sketches, or drawings may be used provided (1) size is 8 1/2 in. x 11 in., (2) information in Items 1 through 6 on this report is included on each sheet, (3) each sheet is numbered and the number of sheets is recorded at the top of this form, and (4) each sheet is initialed and dated by the Owner or Owner's designee and the AIA.

## FORM NIS-2 (back)

9. Remarks: CR-2002-96 reconciles the replacement pipe which was certified to ASME III-1, 1989 Ed., No Add. Replacement valve certification to ASME III-1, 1971 Ed., S.'73 Add. acceptable per ECP 020501145-3.

(Applicable Manufacturer's Data Reports are available on-site)

### CERTIFICATE OF COMPLIANCE

We certify that the statements made in the report are correct and this **repair and replacement** conforms to the rules of the ASME Code, Section XI.
repair or replacement

Type Code Symbol Stamp: N/A

Certificate of Authorizaton No: N/A  Expiration Date: N/A

Signed: [signature] Supervising ASME Codes Engineer Date: 7/29/02
Owner or Owner's Designee, Title

### CERTIFICATE OF INSPECTION

I, the undersigned holding a valid commission issued by the National Board of Boiler and Pressure Vessel Inspectors and the State or Province of **California**, and employed by **Factory Mutual Insurance Company** of **Johnston, Rhode Island** have inspected the components described in this Owner's Report during the period 05/27/02 to 07/30/02, and state that to the best of my knowledge and belief, the Owner has performed examinations and taken corrective measures described in this Owner's Report in accordance with the requirements of the ASME Code, Section XI.

By signing this certificate, neither the Inspector nor his employer makes any warranty, expressed or implied, concerning the examinations and corrective measures described in this Owner's Report. Furthermore, neither the Inspector nor his employer shall be liable in any manner for any personal injury or property damage or a loss of any kind arising from or connected with this inspection.

[signature] Commissions 1862 California
Inspector's Signature  National Board, State, Province, and Endorsements

Date July 30, 2002

WO- 02051065000

# FORM NIS-2 OWNER'S REPORT FOR REPAIRS OR REPLACEMENTS

As Required by the Provisions of the ASME Code Section XI

1. Owner: Southern California Edison Company
2244 Walnut Grove Avenue
Rosemead, California 91770

Unit: 2
MO: 02051372000
Rspec: 020501545-02
PID: 40111A, 40130C
N5: S2-1201-3

2. Plant: San Onofre Nuclear Generating Station
San Clemente, California 92674-012

3. Work Performed by: Southern California Edison Company

Type Code Symbol Stamp: N/A
Authorization No: N/A
Expiration Date: N/A

4. Identification of System: Reactor Coolant

5. (a) Applicable Construction Code: ASME Section III, Class 1-NF, 1974 Ed., S.'75 Addenda; Code Case: None

(b) Applicable Edition of Section XI Utilized for Repairs or Replacements: 1989 Edition, No Addenda

6. Identification of Components Repaired or Replaced and Replacement Components:

| Name of Component | Name of Manufacturer | Manufacturer Serial No. | National Board No. | Other Identification | Year Built | Repaired, Replaced or Replacement | ASME Code Stamped Yes/No |
|---|---|---|---|---|---|---|---|
| 826 KIP Shock Srut Assembly | Paul Monroe | PD16154-258 | N/A | S2RCP03H001 | 1978 | — | Yes |

7. Description of Work:

To facilitate the removal of RCP MP003, a portion of the rear bracket for snubber S2RCP03H001 was ground away as directed by engineering. Note: The rear bracket (item 10 on drawing SO23-922-129) is within the ASME III, Class 1-NF boundary, but the scope of work did not affect the B-K-1 portion of the support and therefore no PSE is required.

8. Tests Conducted: N/A Pressure: N/A Temp: N/A

Note Supplemental sheets in the form of lists, sketches, or drawings may be used provided (1) size is 8 1/2 in x 11 in., (2) information in Items 1 through 6 on this report is included on each sheet, (3) each sheet is numbered and the number of sheets is recorded at the top of this form, and (4) each sheet is initialed and dated by the Owner or Owner's designee and the AIA.

# FORM NIS-2 (back)

9. Remarks: None.

(Applicable Manufacturer's Data Reports are available on-site)

## CERTIFICATE OF COMPLIANCE

We certify that the statements made in the report are correct and this **repair** conforms to the rules of the ASME Code, Section XI.
repair or replacement

Type Code Symbol Stamp: N/A

Certificate of Authorizaton No: N/A  Expiration Date: N/A

Signed: _____ Supervising ASME Codes Engineer Date: 6/11/02
Owner or Owner's Designee, Title

## CERTIFICATE OF INSPECTION

I, the undersigned holding a valid commission issued by the National Board of Boiler and Pressure Vessel Inspectors and the State or Province of **California**, and employed by **Factory Mutual Insurance Company** of **Johnston, Rhode Island** have inspected the components described in this Owner's Report during the period 05/25/02 to 06/12/02, and state that to the best of my knowledge and belief, the Owner has performed examinations and taken corrective measures described in this Owner's Report in accordance with the requirements of the ASME Code, Section XI.

By signing this certificate, neither the Inspector nor his employer makes any warranty, expressed or implied, concerning the examinations and corrective measures described in this Owner's Report. Furthermore, neither the Inspector nor his employer shall be liable in any manner for any personal injury or property damage or a loss of any kind arising from or connected with this inspection.

_____ Commissions 1862 California
Inspector's Signature  National Board, State, Province, and Endorsements

Date June 12, 2002

WO: 02051372000

# FORM NIS-2 OWNER'S REPORT FOR REPAIRS OR REPLACEMENTS

As Required by the Provisions of the ASME Code Section XI

1. Owner: Southern California Edison Company
2244 Walnut Grove Avenue
Rosemead, California 91770

Unit: 2
MO: 02051799000
Rspec: GEN-150
PID: 40141A (F7)
N5: S2-1305-8

2. Plant: San Onofre Nuclear Generating Station
San Clemente, California 92674-0128

3. Work Performed by: Southern California Edison Company

Type Code Symbol Stamp: N/A
Authorization No: N/A
Expiration Date: N/A

4. Identification of System: Main Steam

5. (a) Applicable Construction Code: ASME Section III, Class 2-NF, 1974 Ed., S '74 Add: Code Case: None

(b) Applicable Edition of Section XI Utilized for Repairs or Replacements: 1989 Edition, No Addenda

6. Identification of Components Repaired or Replaced and Replacement Components:

| Name of Component | Name of Manufacturer | Manufacturer Serial No. | National Board No. | Other Identification | Year Built | Repaired, Replaced or Replacement | ASME Code Stamped Yes/No |
|---|---|---|---|---|---|---|---|
| Mechanical Snubber PSA 10-6 | Pacific Scientific | 17960 | N/A | S2-FW-189-H-013A | 1991 | Replaced | No |
| Mechanical Snubber PSA 10-6 | Pacific Scientific | 17990 | N/A | RSO-0806-92, P/N 1801103-07 | N/A | Replacement | No |
| Mechanical Snubber PSA 10-6 | Pacific Scientific | 3472 | N/A | S2-FW-189-H-013B | 1978 | Replaced | Yes |
| Mechanical Snubber PSA 10-6 | Pacific Scientific | 17992 | N/A | RSO-0806-92, P/N 1801103-07 | N/A | Replacement | No |

7. Description of Work:

The mechanical snubbers located in plant hangers S2FW189H013A and S2FW189H013B were replaced with in-kind replacement snubbers. A VT-3 examination of the snubber assemblies was performed after installation. The removed snubbers were placed into the snubber rebuild program.

8. Tests Conducted: N/A Pressure: N/A Temp: N/A

Note: Supplemental sheets in the form of lists, sketches, or drawings may be used provided (1) size is 8 1/2 in. x 11 in., (2) information in Items 1 through 6 on this report is included on each sheet, (3) each sheet is numbered and the number of sheets is recorded at the top of this form, and (4) each sheet is initialed and dated by the Owner or Owner's designee and the AIA.

## FORM NIS-2 (back)

9. Remarks: The replacement snubbers were certified to a higher code class ASME III-1-NF as allowed by ASME III paragraph NCA-2134.

(Applicable Manufacturer's Data Reports are available on-site)

### CERTIFICATE OF COMPLIANCE

We certify that the statements made in the report are correct and this **replacement** conforms to the rules of the ASME Code, Section XI.
repair or replacement

Type Code Symbol Stamp: N/A

Certificate of Authorizaton No: N/A

Expiration Date: N/A

Signed: [signature] Supervising ASME Codes Engineer Date: 7/17/02
Owner or Owner's Designee, Title

### CERTIFICATE OF INSPECTION

I, the undersigned holding a valid commission issued by the National Board of Boiler and Pressure Vessel Inspectors and the State or Province of **California**, and employed by **Factory Mutual Insurance Company** of **Johnston, Rhode Island** have inspected the components described in this Owner's Report during the period 05/31/02 to 07/17/02, and state that to the best of my knowledge and belief, the Owner has performed examinations and taken corrective measures described in this Owner's Report in accordance with the requirements of the ASME Code, Section XI.

By signing this certificate, neither the Inspector nor his employer makes any warranty, expressed or implied, concerning the examinations and corrective measures described in this Owner's Report. Furthermore, neither the Inspector nor his employer shall be liable in any manner for any personal injury or property damage or a loss of any kind arising from or connected with this inspection.

[signature] Commissions 1862 California
Inspector's Signature National Board, State, Province, and Endorsements

Date July 17, 2002

WO 02051799000

# FORM NIS-2 OWNER'S REPORT FOR REPAIRS OR REPLACEMENTS

As Required by the Provisions of the ASME Code Section XI

1. Owner: Southern California Edison Company
2244 Walnut Grove Avenue
Rosemead, California 91770

Unit: 2
MO: 02060029000
Rspec: ASME SECTION XI DATA-0259
PID: 40113B (E3)
N5: S2-1204-10

2. Plant: San Onofre Nuclear Generating Station
San Clemente, California 92674-0128

3. Work Performed by: Southern California Edison Company

Type Code Symbol Stamp: N/A
Authorization No: N/A
Expiration Date: N/A

4. Identification of System: Safety Injection and Shutdown Cooling

5. (a) Applicable Construction Code: ASME Section III, Class 2, 1971 Edition, S.'73 Addenda; Code Case: 1649

(b) Applicable Edition of Section XI Utilized for Repairs or Replacements: 1989 Edition, No Addenda

6. Identification of Components Repaired or Replaced and Replacement Components:

| Name of Component | Name of Manufacturer | Manufacturer Serial No. | National Board No. | Other Identification | Year Built | Repaired, Replaced or Replacement | ASME Code Stamped Yes/No |
|---|---|---|---|---|---|---|---|
| 2" 1500# S. W. Flow Control Valve | Hammel-Dahl Conoflow | 74/5798/013 | N/A | 2HV9372 | 1977 | — | Yes |
| 2" Valve Plug | Anchor/Darling | S/N 2, Ht. #626117 | N/A | RSO-2888-92, SA479 316 | 1992 | Replacement | Yes |

7. Description of Work:

Replaced the valve plug in valve located in plant position 2HV9372 (s/n 74/5798/013) with an in-kind replacement plug.

8. Tests Conducted: System Functional Pressure Test Pressure: NOP Temp: N/A
See: AR 011100086-14

Note Supplemental sheets in the form of lists, sketches, or drawings may be used provided (1) size is 8 1/2 in. x 11 in., (2) information in Items 1 through 6 on this report is included on each sheet, (3) each sheet is numbered and the number of sheets is recorded at the top of this form, and (4) each sheet is initialed and dated by the Owner or Owner's designee and the AIA.

## FORM NIS-2 (back)

9. Remarks: None.

(Applicable Manufacturer's Data Reports are available on-site)

### CERTIFICATE OF COMPLIANCE

We certify that the statements made in the report are correct and this **replacement** conforms to the rules of the ASME Code, Section XI.
repair or replacement

Type Code Symbol Stamp: N/A

Certificate of Authorizaton No: N/A  Expiration Date: N/A

Signed: _____ Supervising ASME Codes Engineer Date: 8/16/02
Owner or Owner's Designee, Title

### CERTIFICATE OF INSPECTION

I, the undersigned holding a valid commission issued by the National Board of Boiler and Pressure Vessel Inspectors and the State or Province of **California**, and employed by **Factory Mutual Insurance Company** of **Johnston, Rhode Island** have inspected the components described in this Owner's Report during the period 06/05/02 to 08/16/02, and state that to the best of my knowledge and belief, the Owner has performed examinations and taken corrective measures described in this Owner's Report in accordance with the requirements of the ASME Code, Section XI.

By signing this certificate, neither the Inspector nor his employer makes any warranty, expressed or implied, concerning the examinations and corrective measures described in this Owner's Report. Furthermore, neither the Inspector nor his employer shall be liable in any manner for any personal injury or property damage or a loss of any kind arising from or connected with this inspection.

_____ Commissions 1862 California
Inspector's Signature  National Board, State, Province, and Endorsements

Date Aug. 16, 2002

WO: 02060029000

# FORM NIS-2 OWNER'S REPORT FOR REPAIRS OR REPLACEMENTS

As Required by the Provisions of the ASME Code Section XI

1. Owner: Southern California Edison Company
2244 Walnut Grove Avenue
Rosemead, California 91770

Unit: 2
MO: 02060898000
Rspec: ASME SECTION XI DATA-0089, GEN-139 R1
PID: 40141A (C2)
N5: S2-1301-2

2. Plant: San Onofre Nuclear Generating Station
San Clemente, California 92674-012

3. Work Performed by: Southern California Edison Company

Type Code Symbol Stamp: N/A
Authorization No: N/A
Expiration Date: N/A

4. Identification of System: Steam Generator Blowdown Processing

5. (a) Applicable Construction Code: ASME Section III, Class 2, 1974 Edition, No Addenda; Code Case: 1637

(b) Applicable Edition of Section XI Utilized for Repairs or Replacements: 1989 Edition, No Addenda

6. Identification of Components Repaired or Replaced and Replacement Components:

| Name of Component | Name of Manufacturer | Manufacturer Serial No. | National Board No. | Other Identification | Year Built | Repaired, Replaced or Replacement | ASME Code Stamped Yes/No |
|---|---|---|---|---|---|---|---|
| 6" 900# Control Valve | Fisher Controls | 6489967 | 3727 | 2HV4053 | 1979 | — | Yes |
| Primary Plug | Fisher Controls | UA6605-2, Ht. #512781 | N/A | RSO-0855-96, SA479 316L (CR-2005-93) | 1996 | Replacement | Yes |
| Pilot Plug | Fisher Controls | AC3715-1, Ht. #520616-1 | N/A | RSO-1125-98, SA479 316L (CR-2005-93) | 1998 | Replacement | Yes |
| 1 1/4" x 36" All-Thread Studs (12 ea cut to 9 1/2") | Nova Machine Products | Ht. Code RTW (6)/ Ht. Code RYW (6) | N/A | RSO-0931-00, SA193 Gr.B7 (CR-3005-96) | N/A | Replacement | No |
| 1 1/4"- 8 Bonnet Nuts (12) | Nova Machine Products | Ht. #10250, Ht. Code BPY | N/A | RSO-0576-96, SA194 Gr.7 (CR-3004-96) | N/A | Replacement | No |

7. Description of Work:

The valve in plant position 2HV4053 (s/n 6489967) was rebuilt using in-kind replacement primary and pilot plugs. The bonnet bolting (12 studs and 12 nuts) was also replaced with in-kind replacement bolting. (12) each studs were cut from all-thread stock to 9 1/2" lengths with the required markings transferred to the cut pieces in accordance with Repair Specification GEN-139 R1.

8. Tests Conducted: System Functional Pressure Test Pressure: NOP Temp: N/A
See: AR 020100957-29

Note Supplemental sheets in the form of lists, sketches, or drawings may be used provided (1) size is 8 1/2 in. x 11 in., (2) information in Items 1 through 6 on this report is included on each sheet, (3) each sheet is numbered and the number of sheets is recorded at the top of this form, and (4) each sheet is initialed and dated by the Owner or Owner's designee and the AIA.

## FORM NIS-2 (back)

9. Remarks: CR-3004-96 (nuts) and CR-3005-96 (studs) reconciles the replacement bolting which was certified to ASME III-2, 1989 Ed., No Add: CR-2005-93 reconciles the replacement plugs which were certified to ASME III-2, 1986 Ed., No Add.

(Applicable Manufacturer's Data Reports are available on-site)

### CERTIFICATE OF COMPLIANCE

We certify that the statements made in the report are correct and this **replacement** conforms to the rules of the ASME Code, Section XI.
repair or replacement

Type Code Symbol Stamp: N/A

Certificate of Authorizaton No: N/A  Expiration Date: N/A

Signed: [signature] Supervising ASME Codes Engineer Date: 8/8/02
Owner or Owner's Designee, Title

### CERTIFICATE OF INSPECTION

I, the undersigned holding a valid commission issued by the National Board of Boiler and Pressure Vessel Inspectors and the State or Province of **California**, and employed by **Factory Mutual Insurance Company** of **Johnston, Rhode Island** have inspected the components described in this Owner's Report during the period 06/14/02 to 08/09/02, and state that to the best of my knowledge and belief, the Owner has performed examinations and taken corrective measures described in this Owner's Report in accordance with the requirements of the ASME Code, Section XI.

By signing this certificate, neither the Inspector nor his employer makes any warranty, expressed or implied, concerning the examinations and corrective measures described in this Owner's Report. Furthermore, neither the Inspector nor his employer shall be liable in any manner for any personal injury or property damage or a loss of any kind arising from or connected with this inspection.

[signature] Commissions 1862 California
Inspector's Signature  National Board, State, Province, and Endorsements

Date Aug. 9, 2002

WO: 02060898000

# FORM NIS-2 OWNER'S REPORT FOR REPAIRS OR REPLACEMENTS

As Required by the Provisions of the ASME Code Section XI

1. Owner: Southern California Edison Company
2244 Walnut Grove Avenue
Rosemead, California 91770

Unit: 2
MO: 02061432000 02061423000, 02061431000
Rspec: 020601561-04
PID: 40111A
N5: S2-1201-3

2. Plant: San Onofre Nuclear Generating Station
San Clemente, California 92674-0128

3. Work Performed by: Southern California Edison Company

Type Code Symbol Stamp: N/A
Authorization No: N/A
Expiration Date: N/A

4. Identification of System: Reactor Coolant

5. (a) Applicable Construction Code: ASME Section III, NB (Class 1) 1971 Ed., S.'71 Add. (RX Vessel); ASME III, Class 1, 1977 Ed., W.'79 Add. (ICI Flange Assemblies); Code Case: None

5. (b) Applicable Edition of Section XI Utilized for Repairs or Replacements: 1989 Edition, No Addenda

6. Identification of Components Repaired or Replaced and Replacement Components:

| Name of Component | Name of Manufacturer | Manufacturer Serial No. | National Board No. | Other Identification | Year Built | Repaired, Replaced or Replacement | ASME Code Stamped Yes/No |
|---|---|---|---|---|---|---|---|
| Reactor Vessel | CE | 71170 | 2000 | S21101MV001 | 1976 | — | Yes |
| Instrument Flange Adapter Hub Pen. #95 | ABB Combustion Engineering | 870002, Ht. #90680 | N/A | RSO-0760-94, SA182 F316 | N/A | Replacement | No |
| Instrument Flange Adapter Hub Pen. #100 | ABB Combustion Engineering | 870004, Ht. #90680 | N/A | RSO-0760-94, SA182 F316 | N/A | Replacement | No |

7. Description of Work:

MO 02061423 remachined the bores in the new replacement instrument flange adapter hubs for the HJTC instruments per the Westinghouse drawing. NDE examination 2PT-097-02 was performed on the newly machined surfaces of each new replacement flange with satisfactory results. MO 02061431 tack welded the post to the instrument flange adapter hub in one location at penetration #95 and one location in penetration #100 in accordance with weld record WR2-02-125. NDE examination 2PT-098-02 was performed on the final weld with satisfactory results. MO 02061432 installed the new replacement instrument adapter hubs at penetrations #95 and #100. All work was done in accordance with Repair Specification 020601561-04.

8. Tests Conducted: System Leakage Pressure Test Pressure: NOP Temp: NOT

VT-2 performed per Procedure SO23-XVII-3.1.1

Note: Supplemental sheets in the form of lists, sketches, or drawings may be used provided (1) size is 8 1/2 in. x 11 in., (2) information in Items 1 through 6 on this report is included on each sheet, (3) each sheet is numbered and the number of sheets is recorded at the top of this form, and (4) each sheet is initialed and dated by the Owner or Owner's designee and the AIA.

## FORM NIS-2 (back)

9. Remarks: CR-3007-95 reconciles the replacement flange adapter hubs which were certified to ASME III, NB (Class 1) 1983 Ed., S.'84 Add.

(Applicable Manufacturer's Data Reports are available on-site)

### CERTIFICATE OF COMPLIANCE

We certify that the statements made in the report are correct and this **repair and replacement** conforms to the rules of the ASME Code, Section XI.
repair or replacement

Type Code Symbol Stamp: N/A

Certificate of Authorizaton No: N/A  Expiration Date: N/A

Signed: [signature] Supervising ASME Codes Engineer Date: 7/29/02
Owner or Owner's Designee, Title

### CERTIFICATE OF INSPECTION

I, the undersigned holding a valid commission issued by the National Board of Boiler and Pressure Vessel Inspectors and the State or Province of **California**, and employed by **Factory Mutual Insurance Company** of **Johnston, Rhode Island** have inspected the components described in this Owner's Report during the period 06/27/02 to 07/30/02, and state that to the best of my knowledge and belief, the Owner has performed examinations and taken corrective measures described in this Owner's Report in accordance with the requirements of the ASME Code, Section XI.

By signing this certificate, neither the Inspector nor his employer makes any warranty, expressed or implied, concerning the examinations and corrective measures described in this Owner's Report. Furthermore, neither the Inspector nor his employer shall be liable in any manner for any personal injury or property damage or a loss of any kind arising from or connected with this inspection.

[signature] Commissions 1862 California
Inspector's Signature  National Board, State, Province, and Endorsements

Date July 29, 2002

WO: 02061432000

# FORM NIS-2 OWNER'S REPORT FOR REPAIRS OR REPLACEMENTS

As Required by the Provisions of the ASME Code Section XI

1. Owner: Southern California Edison Company
2244 Walnut Grove Avenue
Rosemead, California 91770

Unit: 2
MO: 02061858000
Rspec: 020601943-03
PID: 40123A (B4)
N5: S2-1201-3-7

2. Plant: San Onofre Nuclear Generating Station
San Clemente, California 92674-0128

3. Work Performed by: Southern California Edison Company

Type Code Symbol Stamp: N/A
Authorization No: N/A
Expiration Date: N/A

4. Identification of System: Reactor Coolant

5. (a) Applicable Construction Code: ASME Section III, Class 1 (NB), 1971 Edition, S.'73 Addenda; Code Case: None

(b) Applicable Edition of Section XI Utilized for Repairs or Replacements: 1989 Edition, No Addenda

6. Identification of Components Repaired or Replaced and Replacement Components:

| Name of Component | Name of Manufacturer | Manufacturer Serial No. | National Board No. | Other Identification | Year Built | Repaired, Replaced or Replacement | ASME Code Stamped Yes/No |
|---|---|---|---|---|---|---|---|
| 2" 1513# Y-Type Check Valve | Kerotest | MA2-13 | N/A | S21201MU129 | 1976 | Repaired | Yes |

7. Description of Work:

Performed body-to-cover seal weld on check valve S21201MU129 (s/n MA2-13) in accordance with weld record WR2-02-130 and Repair Specification 020601943-03. NDE examination 2PT-099-02 was performed on the seal weld with satisfactory results.

8. Tests Conducted: N/A  Pressure: N/A  Temp: N/A

Note Supplemental sheets in the form of lists, sketches, or drawings may be used provided (1) size is 8 1/2 in. x 11 in., (2) information in Items 1 through 6 on this report is included on each sheet, (3) each sheet is numbered and the number of sheets is recorded at the top of this form, and (4) each sheet is initialed and dated by the Owner or Owner's designee and the AIA.

## FORM NIS-2 (back)

9. Remarks: None.

(Applicable Manufacturer's Data Reports are available on-site)

### CERTIFICATE OF COMPLIANCE

We certify that the statements made in the report are correct and this **repair** conforms to the rules of the ASME Code, Section XI.
repair or replacement

Type Code Symbol Stamp: N/A

Certificate of Authorizaton No: N/A  Expiration Date: N/A

Signed: [signature] Supervising ASME Codes Engineer Date: 8/13/02
Owner or Owner's Designee, Title

### CERTIFICATE OF INSPECTION

I, the undersigned holding a valid commission issued by the National Board of Boiler and Pressure Vessel Inspectors and the State or Province of **California**, and employed by **Factory Mutual Insurance Company** of **Johnston, Rhode Island** have inspected the components described in this Owner's Report during the period 06/27/02 to 08/15/02, and state that to the best of my knowledge and belief, the Owner has performed examinations and taken corrective measures described in this Owner's Report in accordance with the requirements of the ASME Code, Section XI.

By signing this certificate, neither the Inspector nor his employer makes any warranty, expressed or implied, concerning the examinations and corrective measures described in this Owner's Report. Furthermore, neither the Inspector nor his employer shall be liable in any manner for any personal injury or property damage or a loss of any kind arising from or connected with this inspection.

[signature] Commissions 1862 California
Inspector's Signature  National Board, State, Province, and Endorsements

Date Aug. 15, 2002

WO: 02061858000

# FORM NIS-2 OWNER'S REPORT FOR REPAIRS OR REPLACEMENTS

As Required by the Provisions of the ASME Code Section XI

1. Owner: Southern California Edison Company
2244 Walnut Grove Avenue
Rosemead, California 91770

Unit: 2
MO: 96033780000
FCN: F12258M
Rspec: 052-96

2. Plant: San Onofre Nuclear Generating Station
San Clemente, California 92674-0128

PID: 40156B (F2)
N5: S2-1305-8

3. Work Performed by: Southern California Edison Company

Type Code Symbol Stamp: N/A
Authorization No: N/A
Expiration Date: N/A

4. Identification of System: Feedwater

5. (a) Applicable Construction Code ASME Section III, Class 2, 1974 Ed., S.'75 Addenda; Code Case: None

5. (b) Applicable Edition of Section XI Utilized for Repairs or Replacements: 1989 Edition, No Addenda

6. Identification of Components Repaired or Replaced and Replacement Components:

| Name of Component | Name of Manufacturer | Manufacturer Serial No. | National Board No. | Other Identification | Year Built | Repaired, Replaced or Replacement | ASME Code Stamped Yes/No |
|---|---|---|---|---|---|---|---|
| 20" 720# Pow-R-Seal Gate Valve (BW) | WKM | 503454 | 1741 | 2HV4048 | 1977 | — | Yes |
| Bonnet | Ametek | 1437 | N/A | SA350, LF2 (orig. installed on MO 86121019) | 1987 | Repaired | Yes |

7. Description of Work:

Machined the bonnet of valve S/N 503454 located in plant position 2HV4048 in conjunction with the drilling of four alignment holes. The bonnet was machined at locations directly below the drilled holes in accordance with Repair Specification 052-96. Reference: FCN F12258M

8. Tests Conducted: N/A Pressure: N/A Temp: N/A

Note Supplemental sheets in the form of lists, sketches, or drawings may be used provided (1) size is 8 1/2 in. x 11 in., (2) information in Items 1 through 6 on this report is included on each sheet, (3) each sheet is numbered and the number of sheets is recorded at the top of this form, and (4) each sheet is initialed and dated by the Owner or Owner's designee and the AIA.

## FORM NIS-2 (back)

9. Remarks: None.

(Applicable Manufacturer's Data Reports are available on-site)

### CERTIFICATE OF COMPLIANCE

We certify that the statements made in the report are correct and this **repair** conforms to the rules of the ASME Code, Section XI.
repair or replacement

Type Code Symbol Stamp: N/A

Certificate of Authorizaton No: N/A  Expiration Date: N/A

Signed: _____ Supervising ASME Codes Engineer Date: 8/16/02
Owner or Owner's Designee, Title

### CERTIFICATE OF INSPECTION

I, the undersigned holding a valid commission issued by the National Board of Boiler and Pressure Vessel Inspectors and the State or Province of **California**, and employed by **Factory Mutual Insurance Company** of **Johnston, Rhode Island** have inspected the components described in this Owner's Report during the period 12/03/96 to 08/16/02, and state that to the best of my knowledge and belief, the Owner has performed examinations and taken corrective measures described in this Owner's Report in accordance with the requirements of the ASME Code, Section XI.

By signing this certificate, neither the Inspector nor his employer makes any warranty, expressed or implied, concerning the examinations and corrective measures described in this Owner's Report. Furthermore, neither the Inspector nor his employer shall be liable in any manner for any personal injury or property damage or a loss of any kind arising from or connected with this inspection.

_____ Commissions 1862 California
Inspector's Signature  National Board, State, Province, and Endorsements

Date Aug. 16, 2002

WO: 96033780000

# FORM NIS-2 OWNER'S REPORT FOR REPAIRS OR REPLACEMENTS

As Required by the Provisions of the ASME Code Section XI

1. Owner: Southern California Edison Company
2244 Walnut Grove Avenue
Rosemead, California 91770

Unit: 2
MO: 99082068000
FCN: F26922M
Rspec: 960200795-06, GEN-139 R1
PID: 40156B (F2)
N5: S2-1305-8

2. Plant: San Onofre Nuclear Generating Station
San Clemente, California 92674-0128

3. Work Performed by: Southern California Edison Company

Type Code Symbol Stamp: N/A
Authorization No: N/A
Expiration Date: N/A

4. Identification of System: Feedwater

5. (a) Applicable Construction Code ASME Section III, Class 2, 1974 Ed., S.'74 Add. (material, design, and fabrication); Section III, NC-5000, 1992 Ed., No Add (NDE); Code Case: None

5. (b) Applicable Edition of Section XI Utilized for Repairs or Replacements: 1989 Edition, No Addenda; 1992 Ed., No Add (VT-2); Code Case: N-416-1

6. Identification of Components Repaired or Replaced and Replacement Components:

| Name of Component | Name of Manufacturer | Manufacturer Serial No. | National Board No. | Other Identification | Year Built | Repaired, Replaced or Replacement | ASME Code Stamped Yes/No |
|---|---|---|---|---|---|---|---|
| 2" 1500# Globe Valve | Kerotest | TD11-24 | N/A | S21305MR793 | 1976 | Replaced | Yes |
| 2" 6000# 90 Degree Elbow | Bonney Forge | Ht. #C12802, Lot #77791 | N/A | RSO-0241-00, SA105 (CR-3001-96) | N/A | Replacement | No |
| 2" NPS Sch 160 Pipe | Energy & Process Corp. | Ht. #151234 | N/A | RSO-0308-00, SA106 Gr. B (CR-2000-94) | N/A | Replacement | No |
| 2" 1500# Flanges (1 ea. Socket Weld) & (1 ea Blind Flange) | Consolidated Power Supply | Ht. #247N766, Ht. Code VJU7 | N/A | RSO-0224-00, SA105 (CR-3001-96) | N/A | Replacement | No |
| 7/8" x 36" All Thread Stud (2) | Nova Machine Products | Ht. #84830/Ht. #69541 | N/A | RSO-0185-00/RSO-1440-00, SA193 Gr. B7 (CR-3005-96) | N/A | Replacement | No |
| 7/8"-9 Heavy Hex Nuts (20) | Nova Machine Products | Ht. #8077124, Ht. Code DJP | N/A | RSO-1256-99, SA194 2H (CR-3005-00) | N/A | Replacement | No |

7. Description of Work:

Removed the existing body drain valve MR-793 from 2HV4048 per FCN F26922M and replaced it with new piping and flanges. (8) each 5 3/4" length studs were cut from all-thread stock with the required markings transferred to the cut pieces in accordance with Repair Specification GEN-139 Rev. 1. Fabrication and installation of the new replacement body drain piping, flanges and subsequent PT examinations (2PT-013-02 and 2PT-033-02), was performed in accordance with weld record WR2-98-253, Repair Specification 960200795-06, and FCN F26922M.

8. Tests Conducted: System Leakage Pressure Test Pressure: NOP Temp: NOT

See: AR 960200795-08

**This test was performed in lieu of a hydrostatic pressure test as allowed under Code Case N-416-1.**

Note Supplemental sheets in the form of lists, sketches, or drawings may be used provided (1) size is 8 1/2 in. x 11 in., (2) information in Items 1 through 6 on this report is included on each sheet, (3) each sheet is numbered and the number of sheets is recorded at the top of this form, and (4) each sheet is initialed and dated by the Owner or Owner's designee and the AIA.

## FORM NIS-2 (back)

9. Remarks: CR-3001-96, CR-2000-94; CR-3005-96 and CR-3005-00 reconciles the replacement material which was certified to ASME III-2, '86 Ed., '86 Add. (elbow); '86 Ed., No Add. (flanges); '89 Ed., No Add. (pipe and bolting).

(Applicable Manufacturer's Data Reports are available on-site)

### CERTIFICATE OF COMPLIANCE

We certify that the statements made in the report are correct and this **repair and replacement** conforms to the rules of the ASME Code, Section XI.
repair or replacement

Type Code Symbol Stamp: N/A

Certificate of Authorizaton No: N/A  Expiration Date: N/A

Signed: [signature] Supervising ASME Codes Engineer Date: 8/15/02
Owner or Owner's Designee, Title

### CERTIFICATE OF INSPECTION

I, the undersigned holding a valid commission issued by the National Board of Boiler and Pressure Vessel Inspectors and the State or Province of **California**, and employed by **Factory Mutual Insurance Company** of **Johnston, Rhode Island** have inspected the components described in this Owner's Report during the period 01/07/00 to 08/16/02, and state that to the best of my knowledge and belief, the Owner has performed examinations and taken corrective measures described in this Owner's Report in accordance with the requirements of the ASME Code, Section XI.

By signing this certificate, neither the Inspector nor his employer makes any warranty, expressed or implied, concerning the examinations and corrective measures described in this Owner's Report. Furthermore, neither the Inspector nor his employer shall be liable in any manner for any personal injury or property damage or a loss of any kind arising from or connected with this inspection.

[signature] Commissions 1862 California
Inspector's Signature  National Board, State, Province, and Endorsements

Date Aug. 16, 2002

WO: 99082068000

# FORM NIS-2 OWNER'S REPORT FOR REPAIRS OR REPLACEMENTS

As Required by the Provisions of the ASME Code Section XI

1. Owner: Southern California Edison Company
2244 Walnut Grove Avenue
Rosemead, California 91770

Unit: 2
MO: 99091998000
Rspec: ASME SECTION XI DATA-0325
PID: 40112 (C3)
N5: S2-1204-4

2. Plant: San Onofre Nuclear Generating Station
San Clemente, California 92674-0128

3. Work Performed by: Southern California Edison Company

Type Code Symbol Stamp: N/A
Authorization No: N/A
Expiration Date: N/A

4. Identification of System: Safety Injection and Shutdown Cooling

5. (a) Applicable Construction Code: ASME Section III, Class 1, 1971 Edition, S.'73 Addenda; Code Case 1516-1

5. (b) Applicable Edition of Section XI Utilized for Repairs or Replacements: 1989 Edition, No Addenda

6. Identification of Components Repaired or Replaced and Replacement Components:

| Name of Component | Name of Manufacturer | Manufacturer Serial No. | National Board No. | Other Identification | Year Built | Repaired, Replaced or Replacement | ASME Code Stamped Yes/No |
|---|---|---|---|---|---|---|---|
| 3" 1500# Tilting Disc Check Valve | Anchor/Darling | 1N-205 | N/A | S21204MU019 | 1976 | — | Yes |
| Hinge Pin Cover | Anchor/Darling | Ht. #30590 | N/A | RSO-0474-92, SA479 316 | N/A | Replacement | No |

7. Description of Work:

Replaced the hinge pin cover with an in-kind replacement on the check valve (s/n 1N-205) in plant positon S21204MU019.

8. Tests Conducted: System Leakage Pressure Test Pressure: NOP Temp: NOT

VT-2 performed per Procedure SO23-XVII-3.1.1

Note. Supplemental sheets in the form of lists, sketches, or drawings may be used provided (1) size is 8 1/2 in x 11 in., (2) information in Items 1 through 6 on this report is included on each sheet, (3) each sheet is numbered and the number of sheets is recorded at the top of this form, and (4) each sheet is initialed and dated by the Owner or Owner's designee and the AIA.

# FORM NIS-2 (back)

9. Remarks: None.

(Applicable Manufacturer's Data Reports are available on-site)

## CERTIFICATE OF COMPLIANCE

We certify that the statements made in the report are correct and this **replacement** conforms to the rules of the ASME Code, Section XI.
repair or replacement

Type Code Symbol Stamp: N/A

Certificate of Authorizaton No: N/A  Expiration Date: N/A

Signed: _____ Supervising ASME Codes Engineer Date: 7/17/02
Owner or Owner's Designee, Title

## CERTIFICATE OF INSPECTION

I, the undersigned holding a valid commission issued by the National Board of Boiler and Pressure Vessel Inspectors and the State or Province of **California**, and employed by **Factory Mutual Insurance Company** of **Johnston, Rhode Island** have inspected the components described in this Owner's Report during the period 05/08/00 to 07/17/02, and state that to the best of my knowledge and belief, the Owner has performed examinations and taken corrective measures described in this Owner's Report in accordance with the requirements of the ASME Code, Section XI.

By signing this certificate, neither the Inspector nor his employer makes any warranty, expressed or implied, concerning the examinations and corrective measures described in this Owner's Report. Furthermore, neither the Inspector nor his employer shall be liable in any manner for any personal injury or property damage or a loss of any kind arising from or connected with this inspection.

_____ Commissions 1862 California
Inspector's Signature  National Board, State, Province, and Endorsements

Date July 17, 2002

WO: 99091998000

# FORM NIS-2 OWNER'S REPORT FOR REPAIRS OR REPLACEMENTS

As Required by the Provisions of the ASME Code Section XI

1. Owner: Southern California Edison Company
2244 Walnut Grove Avenue
Rosemead, California 91770

Unit: 2
MO: 99121328001
Rspec: ASME SECTION XI DATA-0460
PID: 40124B (C4)
N5: S2-1208-5

2. Plant: San Onofre Nuclear Generating Station
San Clemente, California 92674-012

3. Work Performed by: Southern California Edison Company

Type Code Symbol Stamp: N/A
Authorization No: N/A
Expiration Date: N/A

4. Identification of System: Chemical and Volume Control

5. (a) Applicable Construction Code: ASME Section III, Class 2, 1974 Ed., S.'74 Addenda; Code Case: None

(b) Applicable Edition of Section XI Utilized for Repairs or Replacements: 1989 Edition, No Addenda

6. Identification of Components Repaired or Replaced and Replacement Components:

| Name of Component | Name of Manufacturer | Manufacturer Serial No. | National Board No. | Other Identification | Year Built | Repaired, Replaced or Replacement | ASME Code Stamped Yes/No |
|---|---|---|---|---|---|---|---|
| 1 1/2" x 2" Nozzle Type Relief Valve | Crosby Valve & Gage | N59380-00-0013 | N/A | 2PSV9227 | 1985 | Replaced | Yes |
| 1 1/2" x 2" Nozzle Type Relief Valve | Crosby Valve & Gage | N59380-00-0001 | N/A | Rebuilt under MO 99121408 | 1977 | Replacement | Yes |

7. Description of Work:

Replaced the relief valve (S/N N59380-00-0013) located in plant position 2PSV9227 with a tested and rebuilt spare relief valve (S/N N59380-00-0001) that was rebuilt under MO 99121408. Note: Removed valve to be rebuilt under MO 01030521.

Note: VT-2 examination failed. Leakage acceptable per OA assignment. Reference: 991200976-02

8. Tests Conducted: System Functional Pressure Test Pressure: NOP Temp: N/A
See: AR 991200976-03

Note Supplemental sheets in the form of lists, sketches, or drawings may be used provided (1) size is 8 1/2 in x 11 in., (2) information in Items 1 through 6 on this report is included on each sheet, (3) each sheet is numbered and the number of sheets is recorded at the top of this form, and (4) each sheet is initialed and dated by the Owner or Owner's designee and the AIA.

# FORM NIS-2 (back)

9. Remarks: None.

(Applicable Manufacturer's Data Reports are available on-site)

## CERTIFICATE OF COMPLIANCE

We certify that the statements made in the report are correct and this **replacement** conforms to the rules of the ASME Code, Section XI.
repair or replacement

Type Code Symbol Stamp: N/A

Certificate of Authorizaton No: N/A  Expiration Date: N/A

Signed: _____ Supervising ASME Codes Engineer Date: 7/16/01
Owner or Owner's Designee, Title

## CERTIFICATE OF INSPECTION

I, the undersigned holding a valid commission issued by the National Board of Boiler and Pressure Vessel Inspectors and the State or Province of **California**, and employed by **Factory Mutual Insurance Company** of **Johnston, Rhode Island** have inspected the components described in this Owner's Report during the period 03/02/01 to 07/23/01, and state that to the best of my knowledge and belief, the Owner has performed examinations and taken corrective measures described in this Owner's Report in accordance with the requirements of the ASME Code, Section XI.

By signing this certificate, neither the Inspector nor his employer makes any warranty, expressed or implied, concerning the examinations and corrective measures described in this Owner's Report. Furthermore, neither the Inspector nor his employer shall be liable in any manner for any personal injury or property damage or a loss of any kind arising from or connected with this inspection.

_____ Commissions 1862 California
Inspector's Signature  National Board, State, Province, and Endorsements

Date July 23, 2001

WO: 99121328001

# FORM NIS-2 OWNER'S REPORT FOR REPAIRS OR REPLACEMENTS

As Required by the Provisions of the ASME Code Section XI

1. Owner: Southern California Edison Company
2244 Walnut Grove Avenue
Rosemead, California 91770

Unit: A
MO: N/A
Trav: SOG-01-001
Rspec: 011000208-01
PID: N/A
N5: N/A

2. Plant: San Onofre Nuclear Generating Station
San Clemente, California 92674-012

3. Work Performed by: Southern California Edison Company

Type Code Symbol Stamp: N/A
Authorization No: N/A
Expiration Date: N/A

4. Identification of System: Reactor Coolant

5. (a) Applicable Construction Code: ASME Section III, NB (Code Class 1), 1971 Ed., S.'72 Add (design) and 1989 Ed., No Add. (material); Code Case: None

(b) Applicable Edition of Section XI Utilized for Repairs or Replacements: 1989 Edition, No Addenda

6. Identification of Components Repaired or Replaced and Replacement Components:

| Name of Component | Name of Manufacturer | Manufacturer Serial No. | National Board No. | Other Identification | Year Built | Repaired, Replaced or Replacement | ASME Code Stamped Yes/No |
|---|---|---|---|---|---|---|---|
| RCS Loop Thermowell Mat Code 027-83249 | Weed Instr. Co. | * See list below (17 each) | N/A | RSO-0385-02 | N/A | Replacement | No |

*** N15754, N15755, N15756, N15757, N15760, N15761, N15762, N15763, N15764, N15765, N15766, N15767, N15768, N15769, N15770, N15771, N15841**

7. Description of Work:

Approximately 20 feet of 01-3/4" SB166-NO6690 (Inconel 690) bar stock material was shipped to Weed Instrument Co. for machining into thermowells and functional testing. The material was a common heat/lot: ht. #NX0643HG1, lot #136518, RSO-1685-97. A PT examination was performed on each thermowell by SCE (See NDE Report #2PT-002-02). Reference: P.O. 6H2T 1007; ASME Section XI Traveler (hardcopy) SOG-01-001, Rev. 0 and Rev. 1; Dwg SO23-924-E222. Note: The traveler (SOG-01-001) and supporting documents are filed with RSO-0385-02.

8. Tests Conducted: N/A Pressure: N/A Temp: N/A

Note Supplemental sheets in the form of lists, sketches, or drawings may be used provided (1) size is 8 1/2 in x 11 in., (2) information in Items 1 through 6 on this report is included on each sheet, (3) each sheet is numbered and the number of sheets is recorded at the top of this form, and (4) each sheet is initialed and dated by the Owner or Owner's designee and the AIA.

# FORM NIS-2 (back)

9. Remarks: None.

(Applicable Manufacturer's Data Reports are available on-site)

## CERTIFICATE OF COMPLIANCE

We certify that the statements made in the report are correct and this **replacement** conforms to the rules of the ASME Code, Section XI.
repair or replacement

Type Code Symbol Stamp: N/A

Certificate of Authorizaton No: N/A  Expiration Date: N/A

Signed: for A. B. Roger Holmes Meichler Supervising ASME Codes Engineer Date: 3/1/02
Owner or Owner's Designee, Title

## CERTIFICATE OF INSPECTION

I, the undersigned holding a valid commission issued by the National Board of Boiler and Pressure Vessel Inspectors and the State or Province of **California**, and employed by **Factory Mutual Insurance Company** of **Johnston, Rhode Island** have inspected the components described in this Owner's Report during the period 10/10/01 to 03/01/02, and state that to the best of my knowledge and belief, the Owner has performed examinations and taken corrective measures described in this Owner's Report in accordance with the requirements of the ASME Code, Section XI.

By signing this certificate, neither the Inspector nor his employer makes any warranty, expressed or implied, concerning the examinations and corrective measures described in this Owner's Report. Furthermore, neither the Inspector nor his employer shall be liable in any manner for any personal injury or property damage or a loss of any kind arising from or connected with this inspection.

Inspector's Signature  Commissions 1863 California
National Board, State, Province, and Endorsements

Date March 1, 2002