50-280/281

From: <Michael_Henig@dom.com>
To: <OTY@nrc.gov>
Date: 08/22/2002 8:16:17 AM
Subject: BAW-2323

(Embedded image moved to file: pic29288.pcx)

Omid,

Attached is BAW-2323 [i.e., LOW UPPER-SHELF TOUGHNESS FRACTURE MECHANICS ANALYSIS OF REACTOR VESSELS OF SURRY UNITS 1 AND 2 FOR EXTENDED LIFE THROUGH 48 EFFECTIVE FULL POWER YEARS] for your information in support of the NRC Staff reactor vessel embrittlement evaluation.

Should you have any questions, please advise,

(See attached file: BAW-2323.pdf)

Michael W. Henig

Phone: 804-273-2237

Fax: 804-273-3554

CC: <Bill_Corbin@dom.com>, <Julius_Wroniewicz@dom.com>, <David_Roth@dom.com>, <David_Hostetler@dom.com>, <Paul_Aitken@dom.com>, <David_Lewis@shawpittman.com>, <Tom_Snow@dom.com>, <Diane_Aitken@dom.com>, <Marc_Hotchkiss@dom.com>, <Lillian_Cuoco@dom.com>, <Nitin_Shah@dom.com>

Add: Omid Tabatabai

T010

BAW-2323
June 1998

LOW UPPER-SHELF TOUGHNESS FRACTURE MECHANICS ANALYSIS OF REACTOR VESSELS OF SURRY UNITS 1 AND 2 FOR EXTENDED LIFE THROUGH 48 EFFECTIVE FULL POWER YEARS

FRAMATOME
TECHNOLOGIES

BAW-2323
June 1998

LOW UPPER-SHELF TOUGHNESS FRACTURE MECHANICS ANALYSIS OF REACTOR VESSELS OF SURRY UNITS 1 AND 2 FOR EXTENDED LIFE THROUGH 48 EFFECTIVE FULL POWER YEARS

FTI Document No. 77-2323-00

Framatome Technologies, Inc.
Integrated Nuclear Services
P. O. Box 10935
Lynchburg, VA 24506-0935

LOW UPPER-SHELF TOUGHNESS
FRACTURE MECHANICS ANALYSIS
OF REACTOR VESSELS OF
SURRY UNITS 1 AND 2
FOR EXTENDED LIFE THROUGH
48 EFFECTIVE FULL POWER YEARS

BAW-2323
FTI Document No. 77-2323-00

Prepared for
Virginia Power Company

by
Framatome Technologies, Inc.
Lynchburg, Virginia

This report is an accurate description of the low upper-shelf toughness fracture mechanics analysis performed for the reactor vessels at Surry Units 1 and 2.

6/19/98

D. E. Killian, Principal Engineer — Date
Materials and Structural Analysis Unit

This report has been reviewed and found to be an accurate description of the low upper-shelf toughness fracture mechanics analysis performed for the reactor vessels at Surry Units 1 and 2.

6/25/98

K. K. Yoon, Technical Consultant — Date
Materials and Structural Analysis Unit

Verification of independent review.

6-25-98

K. E. Moore, Manager — Date
Materials and Structural Analysis Unit

This report is approved for release.

6/25/98

D. L. Howell, Project Manager — Date
Reactor Vessel Services

EXECUTIVE SUMMARY

Since it has been projected that the upper-shelf Charpy energy levels of reactor vessel beltine weld materials at Surry Units 1 and 2 may be less than 50 ft-lb at 48 effective full power years of service, a low upper-shelf fracture mechanics evaluation is required to demonstrate that sufficient margins of safety against fracture remain to satisfy the requirements of Appendix G to 10 CFR Part 50.

A low upper-shelf fracture mechanics analysis has been performed to evaluate the reactor vessel welds at Surry Units 1 and 2 for ASME Levels A, B, C, and D Service Loadings, based on the evaluation acceptance criteria of the ASME Code, Section XI, Appendix K.

The analysis presented in this report demonstrates that the reactor vessel beltline welds at Surry Units 1 and 2 satisfy the ASME Code requirements of Appendix K for ductile flaw extensions and tensile stability using projected low upper-shelf Charpy impact energy levels for the weld material at 48 effective full power years of plant operation.

CONTENTS

LIST OF TABLES

LIST OF FIGURES

1. Introduction

One consideration for extending the operational life reactor vessels beyond their original licensing period is the degradation of upper-shelf Charpy impact energy levels in reactor vessel materials due to neutron radiation. Appendix G to 10 CFR Part 50, "Domestic Licensing of Production and Utilization Facilities," states in Paragraph IV.A.1.a that, "Reactor vessel beltline materials must have Charpy upper-shelf energy ... of no less than 75 ft-lb initially and must maintain Charpy upper-shelf energy throughout the life of the vessel of no less than 50 ft-lb, unless it is demonstrated in a manner approved by the Director, Office of Nuclear Reactor Regulation, that lower values of Charpy upper-shelf energy will provide margins of safety against fracture equivalent to those required by Appendix G of Section XI of the ASME Code." Materials with Charpy upper-shelf energy below 50 ft-lbs are said to have low upper-shelf (LUS) fracture toughness. Fracture mechanics analysis is necessary to satisfy the requirements of Appendix G to 10 CFR Part 50 for reactor vessel materials with upper-shelf Charpy impact energy levels that have dropped, or that are predicted to drop, below the 50 ft-lb requirement.

The base metal and weld materials used in the beltline regions of the Surry Units 1 and 2 reactor vessels are identified in Figures 1-1 and 1-2, respectively. Since it has been projected that the upper-shelf Charpy energy levels of the beltine weld materials may be less than 50 ft-lb at 48 effective full power years (EFPY's) of service, a low upper-shelf fracture mechanics evaluation has been performed to satisfy the requirements of Appendix G to 10 CFR Part 50. A similar analysis is not required for the reactor vessel beltline forging materials since all applicable materials are predicted to have upper-shelf Charpy energy levels in excess of 50 ft-lb at 48 EFPY.

The present analysis addresses ASME Levels A, B, C, and D Service Loadings. For Levels A and B Service Loadings, the low upper-shelf fracture mechanics evaluation is performed according to the acceptance criteria and evaluation procedures contained in Appendix K to Section XI of the ASME Code [1]. The evaluation also utilizes the acceptance criteria prescribed in Appendix K for Levels C and D Service Loadings, although evaluation procedures for this class of loading conditions are not specified in the Code. Levels C and D Service Loadings are evaluated using the one-dimensional, finite element, thermal and stress models and linear elastic fracture mechanics methodology of Framatome Technologies' PCRIT computer code to determine stress intensity factors for a worst case pressurized thermal shock transient.

Figure 1-1 Reactor Vessel Beltline Materials for Surry Unit 1

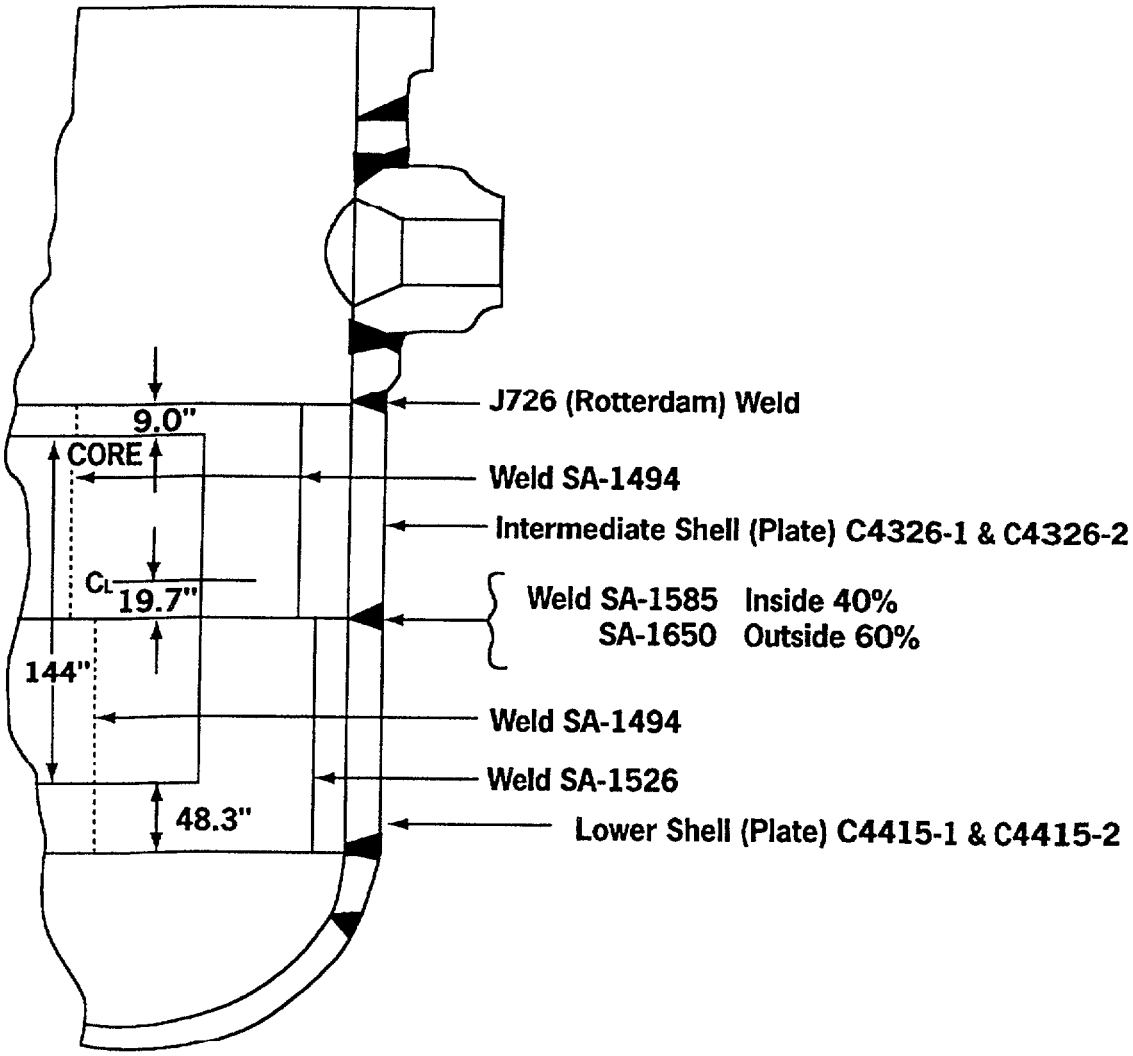

Figure 1-2 Reactor Vessel Beltline Materials for Surry Unit 2

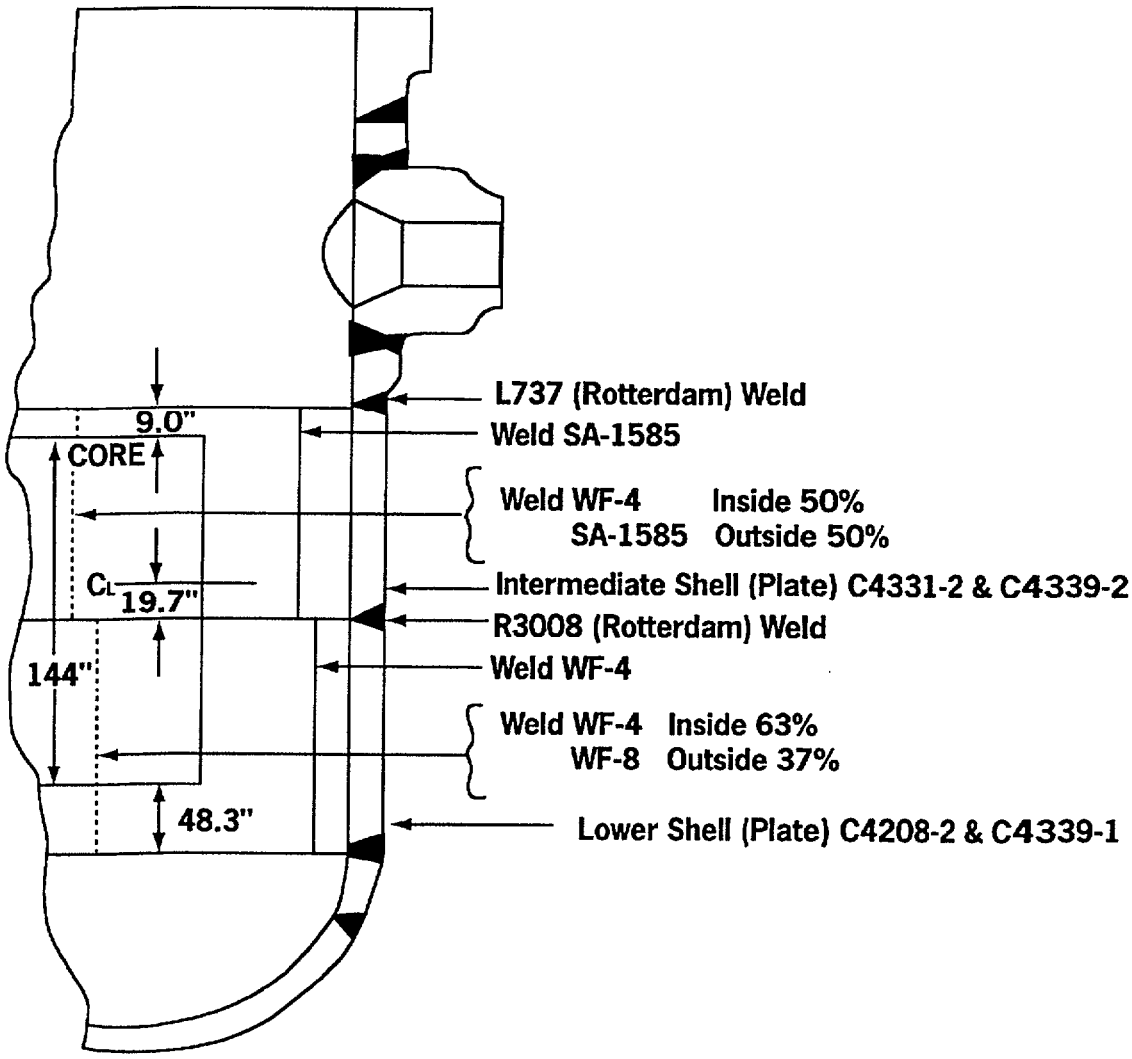

2. Acceptance Criteria

Appendix G to Section XI of the ASME Code [1] provides analytical procedures for the prevention of non-ductile fracture in those areas of the pressure boundary that are comprised of materials with upper-shelf Charpy energy levels of at least 50 ft-lbs. These procedures utilize transition range fracture toughness curves with a fluence-based adjustment to crack tip temperature, and require that the component be operated at a sufficiently low pressure so as to preclude non-ductile failure. These same procedures, however, make no allowance when crack-tip temperatures are maintained above the transition range between cleavage and ductile type failures, where ductile tearing is the predicted mode of failure for ferritic reactor vessel materials. Accordingly, additional evaluation procedures were developed that utilize elastic-plastic fracture mechanics methodology and the concept of J-integral controlled crack growth. Added to Section XI of the ASME Code as Appendix K, these new analytical guidelines may be applied when crack tip temperatures are in the upper-shelf temperature region.

Acceptance criteria for the assessment of reactor vessels with low upper shelf Charpy energy levels are prescribed in Article K-2000 of Appendix K to Section XI of the ASME Code [1]. These criteria, which apply to both longitudinal and circumferential flaws, as depicted in Figures 2-1 and 2-2, respectively, are summarized below as they pertain to the evaluation of reactor vessel weld metals.

2.1 Levels A and B Service Loadings (K-2200)

(a) When evaluating adequacy of the upper shelf toughness for the weld material for Levels A and B Service Loadings, an interior semi-elliptical surface flaw with a depth one-quarter of the wall thickness and a length six times the depth shall be postulated, with the flaw's major axis oriented along the weld of concern and the flaw plane oriented in the radial direction. Two criteria shall be satisfied:

(1) The applied J-integral evaluated at a pressure 1.15 times the accumulation pressure (P_a) as defined in the plant specific Overpressure Protection Report, with a factor of safety of 1.0 on thermal loading for the plant specific heatup and cooldown conditions, shall be less than the J-integral of the material at a ductile flaw extension of 0.10 in.

(2) Flaw extensions at pressures up to 1.25 times the accumulation pressure (P_a) shall be ductile and stable, using a factor of safety of 1.0 on thermal loading for the plant specific heatup and cooldown conditions.

(b) The J-integral resistance versus flaw extension curve shall be a conservative representation for the vessel material under evaluation.

2.2 Level C Service Loadings (K-2300)

(a) When evaluating the adequacy of the upper shelf toughness for the weld material for Level C Service Loadings, interior semi-elliptical surface flaws with depths up to one-tenth of the base metal wall thickness, plus the cladding thickness, with total depths not exceeding 1.0 in., and a surface length six times the depth, shall be postulated, with the flaw's major axis oriented along the weld of concern, and the flaw plane oriented in the radial direction. Flaws of various depths, ranging up to the maximum postulated depth, shall be analyzed to determine the most limiting flaw depth. Two criteria shall be satisfied:

(1) The applied J-integral shall be less than the J-integral of the material at a ductile flaw extension of 0.10 in., using a factor of safety of 1.0 on loading.

(2) Flaw extensions shall be ductile and stable, using a factor of safety of 1.0 on loading.

(b) The J-integral resistance versus flaw extension curve shall be a conservative representation for the vessel material under evaluation.

2.3 Level D Service Loadings (K-2400)

(a) When evaluating adequacy of the upper shelf toughness for Level D Service Loadings, flaws as specified for Level C Service Loadings shall be postulated, and toughness properties for the corresponding orientation shall be used. Flaws of various depths, ranging up to the maximum postulated depth, shall be analyzed to determine the most limiting flaw depth. Flaw extensions shall be ductile and stable, using a factor of safety of 1.0 on loading.

(b) The J-integral resistance versus flaw extension curve shall be a best estimate representation for the vessel material under evaluation.

(c) The extent of stable flaw extension shall be less than or equal to 75% of the vessel wall thickness, and the remaining ligament shall not be subject to tensile instability.

Figure 2-1 Reactor Vessel Beltline Region with Postulated Longitudinal Flaw

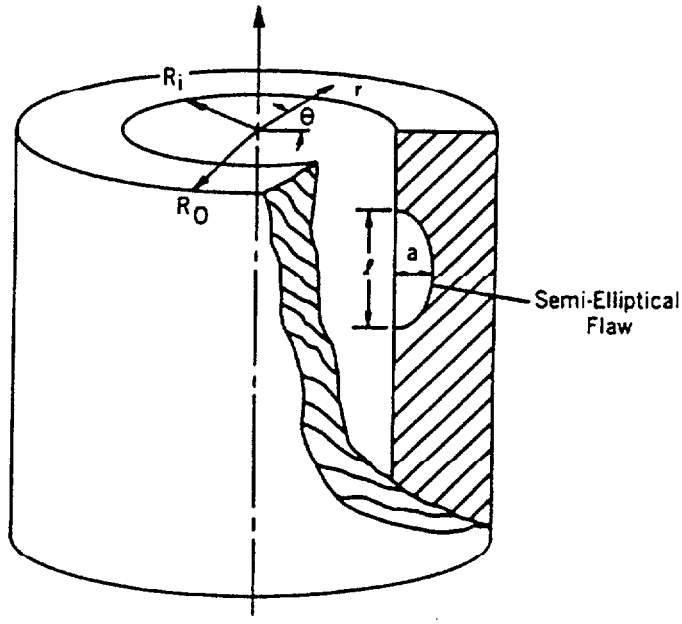

(Not to scale:)

Figure 2-2 Reactor Vessel Beltline Region with Postulated Circumferential Flaw

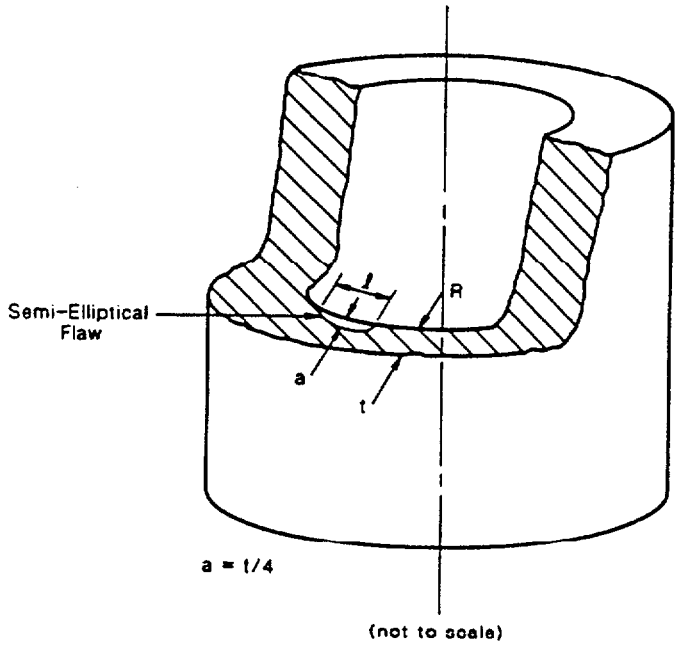

3. Material Properties and Reactor Vessel Design Data

An upper-shelf fracture toughness material model is presented below, as well as mechanical properties for the weld material and reactor vessel design data.

3.1 J-Integral Resistance Model for Mn-Mo-Ni/Linde 80 Welds

A model for the J-integral resistance versus crack extension curve (J-R curve) required to analyze low upper-shelf energy materials has been derived specifically for Mn-Mo-Ni/Linde 80 weld materials. The toughness model was developed from a large data base of fracture specimens, as described in the report for a low upper-shelf analysis performed for reactor vessels at Florida Power and Light's Turkey Point Units 3 and 4 [2]. Using a modified power law to represent the J-R curve, the mean value of the J-integral is given by:

$$J = 1000\ C1(\Delta a)^{C2} \exp(C3\ \Delta a^{C4})$$

with

$$\ln(C1) = a1 + a2\,Cu\,(\phi_t)^{a7} + a3\ T + a4\ \ln(B_N)$$

$$C2 = d1 + d2\ \ln(C1) + d3\ \ln(B_N)$$

$$C3 = d4 + d5\ \ln(C1) + d6\ \ln(B_N)$$

$$C4 = -0.4489$$

where

Δa	=	crack extension, in.
Cu	=	copper content, Wt-%
ϕ_t	=	fluence at crack tip, 10^{18} n/cm^2
T	=	temperature, °F
B_N	=	specimen net thickness = 0.8 in.

and

a1	=	1.81
a2	=	-1.512
a3	=	-0.00151
a4	=	0.3935
a7	=	0.1236
d1	=	0.077
d2	=	0.1164
d3	=	0.07222
d4	=	-0.08124
d5	=	-0.00920
d6	=	0.05183

A lower bound ($-2S_e$) J-R curve is obtained by multiplying J-integrals from the mean J-R curve by 0.699 [2]. It was shown in Reference 1 that a typical lower bound J-R curve is a conservative representation of toughness values for reactor vessel beltline materials, as required by Appendix K [1] for Levels A, B, and C Service Loadings. The best estimate representation of toughness required for Level D Service Loadings is provided by the mean J-R curve.

3.2 Material Properties for Weld Material

Mechanical properties are developed in Table 3-1 for the following materials:

Reactor vessel base metal: A533, Grade B, Class 1 low alloy steel plate
Description: Mn-1/2Mo-1/2Ni
Carbon content: < 0.30%

Description of weld material:
Weld wire: Mn-Mo-Ni
Weld fluxes: Linde 80, SAF 89, and Grau Lo
Note: Although the J-R upper-shelf fracture toughness model was developed specifically for Linde 80 weld material, it is assumed that this material model may be used for all beltline welds, including the Rotterdam J276, L737, and R3008 weld materials.

Table 3-1 Mechanical Properties for Beltline Materials

Temp.	E	Yield Strength (Sy)			Ultimate Strength (Su)			Alpha
	Base Metal	Base Metal	Surry-1 Weld	Surry-2 Weld	Base Metal	Surry-1 Weld	Surry-2 Weld	Base Metal
	Code [3]	Code [3]	Actual [4]	Actual [4]	Code [3]	Actual [4]	Actual [4]	Code [3]
(F)	(ksi)	(ksi)	(ksi)	(ksi)	(ksi)	(ksi)	(ksi)	(in/in/F)
100	29500	50.0	65.1	65.1	80.0	81.0	81.0	7.06E-06
200	28800	47.5	61.8	61.8	80.0	81.0	81.0	7.25E-06
300	28300	46.1	60.0	60.0	80.0	81.0	81.0	7.43E-06
400	27700	45.1	58.7	58.7	80.0	81.0	81.0	7.58E-06
500	27300	44.5	57.9	57.9	80.0	81.0	81.0	7.70E-06
543	27000	44.2	57.5	57.5	80.0	81.0	81.0	7.76E-06
600	26700	43.8	57.0	57.0	80.0	81.0	81.0	7.83E-06

Also, Poisson's ratio, ν, is taken to be 0.3.

The ASME transition region fracture toughness curve for K_{Ic}, used to define the beginning of the upper-shelf toughness region, is indexed by the RT_{NDT} of the weld material. Using Table 3-3 of Reference 5 for generic Linde 80 weld material, the mean and standard deviation of the initial RT_{NDT} are -4.8 °F and 19.7 °F, respectively.

3.3 Reactor Vessel Design Data

Pertinent design data for upper-shelf flaw evaluations in the beltline region of the reactor vessel are provided below for Surry Units 1 and 2.

Design pressure, P_d	= 2485 psig (use 2500 psig)
Inside radius, R_i	= 78.95 in.
Vessel thickness, t	= 8.08 in.
Cladding thickness, t_c	= 0.16 in.
Reactor coolant inlet temperature, T_{in}	= 543 °F

3.4 J-Integral Resistance for Linde 80 Weld Material

Values of J-integral resistance from the upper-shelf toughness model of Section 3.1 are dependent on the temperature and fluence at the crack tip location, and the copper content of the weld material. These parameters are listed below for the reactor vessels at Surry Units 1 and 2.

Crack tip temperature varies with plant operation. At normal conditions, the temperature at the crack tip, T, is taken to be the inlet temperature, or

$$\text{Crack tip temperature, } T = T_{in} = 543\ ^\circ\text{F}$$

Fluence at the crack tip is derived from the inside surface fluence using the attenuation equation from Regulatory Guide 1.99, Rev. 2 [6]:

$$\phi_t = \phi_{IS}\ e^{-0.24x}$$

where

ϕ_t = attentuated fluence at crack tip, n/cm^2

ϕ_{IS} = fluence at inside surface, n/cm^2

x = depth into the vessel wall, in.

Table 3-2 lists the copper content of the weld materials and the fluence at the inside surface of the reactor vessel for all welds located within the innermost 40% of the beltline wall.

Table 3-2 Selected Welds and Properties

Plant	Weld ID	Weld Orientation	Copper Content (wt-%)	Inside Surface Fluence (n/cm^2)
Surry 1	J726	Circumferential	0.33	9.92×10^{18}
	SA-1494	Longitudinal	0.16	11.0×10^{18}
	SA-1585	Circumferential	0.22	51.7×10^{18}
	SA-1526	Longitudinal	0.34	11.0×10^{18}
Surry 2	L737	Circumferential	0.35	9.42×10^{18}
	SA-1585	Longitudinal	0.22	13.0×10^{18}
	WF-4	Longitudinal	0.19	13.0×10^{18}
	R3008	Circumferential	0.19	58.7×10^{18}

Tables 3-3 and 3-4 provide mean and lower bound J-integral resistances, $J_{0.1}$, of the weld material at a ductile flaw extension of 0.10 in. This data is provided for the beltline region weld locations at Surry Units 1 and 2, based on the following postulated flaw depths for Levels A&B and C&D Service Loadings:

Service Loading Condition	Flaw Depth a (in.)	Extension Δa (in.)	Total Depth $x = a + \Delta a$ (in.)
Level A&B	t/4 = 2.02	0.1	2.12
Level C&D	t/10 = 0.808	0.1	0.908

Table 3-3 J-Integral Resistances for Levels A and B Service Loadings

Plant	Weld ID	Weld Orient.	Fluence at Extended Crack Depth (n/cm^2)	Mean $J_{0.1}$ (lb/in)	Lower Bound $J_{0.1}$ (lb/in)
Surry 1	J726	C	5.96×10^{18}	816	570
	SA-1494	L	6.61×10^{18}	1020	713
	SA-1585	C	31.1×10^{18}	884	618
	SA-1526	L	6.61×10^{18}	801	560
Surry 2	L737	C	5.66×10^{18}	797	557
	SA-1585	L	7.82×10^{18}	935	654
	WF-4	L	7.82×10^{18}	975	681
	R3008	C	35.3×10^{18}	924	646

Table 3-4 J-Integral Resistances for Levels C and D Service Loadings

Plant	Weld ID	Weld Orient.	Fluence at Extended Crack Depth (n/cm^2)	Mean $J_{0.1}$ (lb/in)	Lower Bound $J_{0.1}$ (lb/in)
Surry 1	J726	C	7.98×10^{18}	803	561
	SA-1494	L	8.85×10^{18}	1012	708
	SA-1585	C	41.6×10^{18}	873	610
	SA-1526	L	8.85×10^{18}	787	550
Surry 2	L737	C	7.58×10^{18}	784	548
	SA-1585	L	10.5×10^{18}	925	647
	WF-4	L	10.5×10^{18}	966	675
	R3008	C	47.2×10^{18}	913	639

4. Analytical Methodology

Upper-shelf toughness is evaluated using fracture mechanics analytical methods that utilize the acceptance criteria and evaluation procedures of Section XI, Appendix K [1], where applicable.

4.1 Procedure for Levels A and B Service Loadings

The applied J-Integral is calculated per Appendix K, paragraph K-4210 [1], using an effective flaw depth to account for small scale yielding at the crack tip, and evaluated per K-4220 for upper-shelf toughness and per K-4310 for flaw stability, as outlined below.

(1) For a longitudinal flaw of depth a, the stress intensity factor due to internal pressure is calculated with a safety factor (SF) on pressure using the following:

$$K_{Ip} = (SF)p\left(1+\frac{R_i}{t}\right)(\pi a)^{0.5}F_1$$

where

$$F_1 = 0.982 + 1.006\left(\frac{a}{t}\right)^2, \quad 0.20 \le \left(\frac{a}{t}\right) \le 0.50$$

(2) For a circumferential flaw of depth a, the stress intensity factor due to internal pressure is calculated with a safety factor (SF) on pressure using the following:

$$K_{Ip} = (SF)p\left(1+\frac{R_i}{2t}\right)(\pi a)^{0.5}F_2$$

where

$$F_2 = 0.885 + 0.233\left(\frac{a}{t}\right) + 0.345\left(\frac{a}{t}\right)^2, \quad 0.20 \le \left(\frac{a}{t}\right) \le 0.50$$

(3) For a longitudinal or circumferential flaw of depth, a, the stress intensity factor due to radial thermal gradients is calculated using the following:

$$K_{It} = \left(\frac{CR}{1000}\right) t^{2.5} F_3, \qquad 0 \le (CR) \le 100°\text{F / hour}$$

where

(CR) = cooldown rate (°F / hour)

$$F_3 = 0.690 + 3.127\left(\frac{a}{t}\right) - 7.435\left(\frac{a}{t}\right)^2 + 3.532\left(\frac{a}{t}\right)^3, \quad 0.20 \le \left(\frac{a}{t}\right) \le 0.50$$

(4) The effective flaw depth for small scale yielding, a_e, is calculated using the following:

$$a_e = a + \left(\frac{1}{6\pi}\right)\left[\frac{K_{Ip} + K_{It}}{\sigma_y}\right]^2$$

(5) For a longitudinal flaw of depth a_e, the stress intensity factor due to internal pressure for small scale yielding is calculated with a safety factor (SF) on pressure using the following:

$$K'_{Ip} = (SF)p\left(1 + \frac{R_i}{t}\right)(\pi a_e)^{0.5} F'_1$$

where

$$F'_1 = 0.982 + 1.006\left(\frac{a_e}{t}\right)^2, \quad 0.20 \le \left(\frac{a_e}{t}\right) \le 0.50$$

(6) For a circumferential flaw of depth a_e, the stress intensity factor due to internal pressure for small scale yielding is calculated with a safety factor (SF) on pressure using the following:

$$K'_{Ip} = (SF)p\left(1+\frac{R_i}{2t}\right)(\pi a_e)^{0.5}F'_2$$

where

$$F'_2 = 0.885 + 0.233\left(\frac{a_e}{t}\right) + 0.345\left(\frac{a_e}{t}\right)^2, \quad 0.20 \le \left(\frac{a_e}{t}\right) \le 0.50$$

(7) For a longitudinal or circumferential flaw of depth, a_e, the stress intensity factor due to radial thermal gradients for small scale yielding is calculated using the following:

$$K'_{It} = \left(\frac{CR}{1000}\right)t^{2.5}F'_3, \qquad 0 \le (CR) \le 100°\,\text{F/hour}$$

where

$$F'_3 = 0.690 + 3.127\left(\frac{a_e}{t}\right) - 7.435\left(\frac{a_e}{t}\right)^2 + 3.532\left(\frac{a_e}{t}\right)^3, \quad 0.20 \le \left(\frac{a_e}{t}\right) \le 0.50$$

(8) The J-integral due to applied loads for small scale yielding is calculated using the following:

$$J_1 = 1000\frac{\left(K'_{Ip} + K'_{It}\right)^2}{E'}$$

where

$$E' = \frac{E}{1-\nu^2}$$

(9) Evaluation of upper-shelf toughness at a flaw extension of 0.10 in. is performed for a flaw depth,

$$a = 0.25t + 0.10\,\text{in.},$$

using

$$SF = 1.15$$

$$p = P_a$$

where P_a is the accumulation pressure for Levels A and B Service Loadings, such that

$$J_1 < J_{0.1}$$

where

J_1 = the applied J-integral for a safety factor of 1.15 on pressure, and a safety factor of 1.0 on thermal loading

$J_{0.1}$ = the J-integral resistance at a ductile flaw extension of 0.10 in.

(10) Evaluation of flaw stability is performed through use of a crack driving force diagram procedure by comparing the slopes of the applied J-integral curve and the J-R curve. The applied J-integral is calculated for a series of flaw depths corresponding to increasing amounts of ductile flaw extension. The applied pressure is the accumulation pressure for Levels A and B Service Loadings, P_a, and the safety factor (SF) on pressure is 1.25. Flaw stability at a given applied load is verified when the slope of the applied J-integral curve is less than the slope of the J-R curve at the point on the J-R curve where the two curves intersect.

4.2 Procedure for Levels C and D Service Loadings

Levels C and D Service Loadings are evaluated using the one-dimensional, finite element, thermal and stress models and linear elastic fracture mechanics methodology of the PCRIT computer code to determine stress intensity factors for pressurized thermal shock type transient events.

The evaluation is performed as follows:

(1) Utilize PCRIT to calculate stress intensity factors for a semi-elliptical depth flaw depth of $^1/_{10}$ the base metal wall thickness, as a function of time, due to internal pressure and radial thermal gradients with a factor of safety of 1.0 on loading. The critical time in the transient occurs at that point where the stress intensity factor most closely approaches the upper-shelf toughness curve.

(2) At the critical transient time, develop a crack driving force diagram with the applied J-integral and J-R curves plotted as a function of flaw extension. The adequacy of the upper-shelf toughness is evaluated by comparing the applied J-integral with the J-R curve at a flaw extension of 0.10 in. Flaw stability is assessed by examining the slopes of the applied J-integral and J-R curves at the points of intersection.

4.3 Temperature Range for Upper-Shelf Fracture Toughness Evaluations

Upper-shelf fracture toughness is determined through use of Charpy V-notch impact energy versus temperature plots by noting the temperature above which the Charpy energy remains on a plateau, maintaining a relatively high constant energy level. Similarly, fracture toughness can be addressed in three different regions on the temperature scale, i.e. a lower-shelf toughness region, a transition region, and an upper-shelf toughness region. Fracture toughness of reactor vessel steel and associated weld metals are conservatively predicted by the ASME initiation toughness curve, K_{Ic}, in lower-shelf and transition regions. In the upper-shelf region, the upper-shelf toughness curve, K_{Jc}, is derived from the upper-shelf J-integral resistance model described in Section 3.1. The upper-shelf toughness then becomes a function of fluence, copper content, temperature, and fracture specimen size. When upper-shelf toughness is plotted versus temperature, a plateau-like curve develops that decreases slightly with increasing temperature. Since the present analysis addresses the low upper-shelf fracture toughness issue, only the upper-shelf temperature range, which begins at the intersection of K_{Ic} and the upper-shelf toughness curves, is considered.

4.4 Effect of Cladding Material

Although the PCRIT code utilized in the flaw evaluations for Levels C and D Service Loadings has a built-in cladding model to include the effect of thermal expansion in the cladding on stress, the code does not consider stresses in the cladding when calculating stress intensity factors for thermal loads. To account for this cladding effect, an additional stress intensity factor, K_{Iclad}, is calculated separately and added to the total stress intensity factor computed by PCRIT.

The contribution of cladding stresses to stress intensity factor was examined previously [7] for the Zion-1 WF-70 weld using thermal loads for the Turkey Point SLB without offsite power transient. The maximum value of K_{Iclad}, at any time during the transient and for any flaw depth, was determined to be 9.0 ksi$\sqrt{in}$. Since the Zion, Turkey Point, and Surry reactor vessels are similar in design, this value for K_{Iclad} will also be used for the present flaw evaluations.

5. Applied Loads

The Levels A and B Service Loadings required by Appendix K are an accumulation pressure (internal pressure load) and a cooldown rate (thermal load). Since Levels C and D Service Loadings are not specified by the Code, Levels C and D pressurized thermal shock events are reviewed and a worst case transient is selected for use in flaw evaluations.

5.1 Levels A and B Service Loadings

Per paragraph K-1300 of Appendix K [1], the accumulation pressure used for flaw evaluations should not exceed 1.1 times the design pressure. Using 2.5 ksi as the design pressure, the accumulation pressure is 2.75 ksi. The cooldown rate is also taken to be the maximum required by Appendix K, 100 °F/hour.

5.2 Levels C and D Service Loadings

The limiting Level D transient for the Surry plants is the main steam line break (SLB) without offsite power transient. Pressurizer pressure and cold leg temperature variations for this transient are shown in Figure 5-1. The pressures used in the PCRIT transient analysis are increased by 30 psi over those defined in Table 5-1 to account for the pressure difference between the pressurizer and the downcomer (i.e., reactor vessel beltline region). The PCRIT analysis of this transient was of sufficient duration to capture the peak value of stress intensity factor over time. Since this transient bounds all Level C transients [7], it is also used to evaluate Level C Service Loadings.

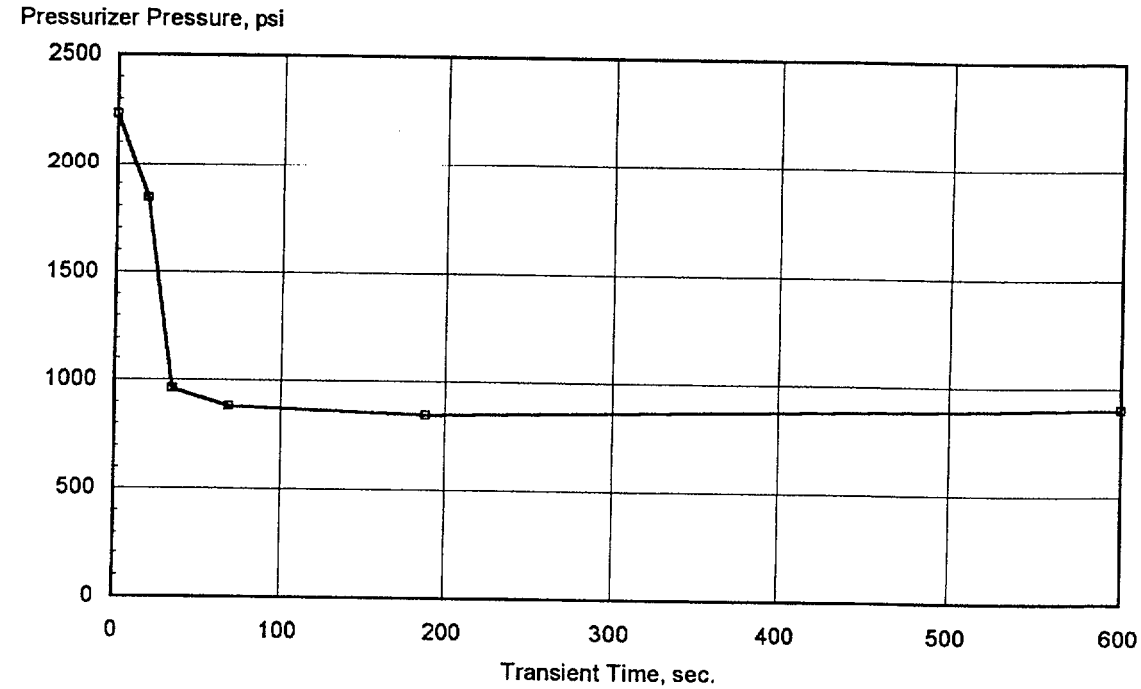

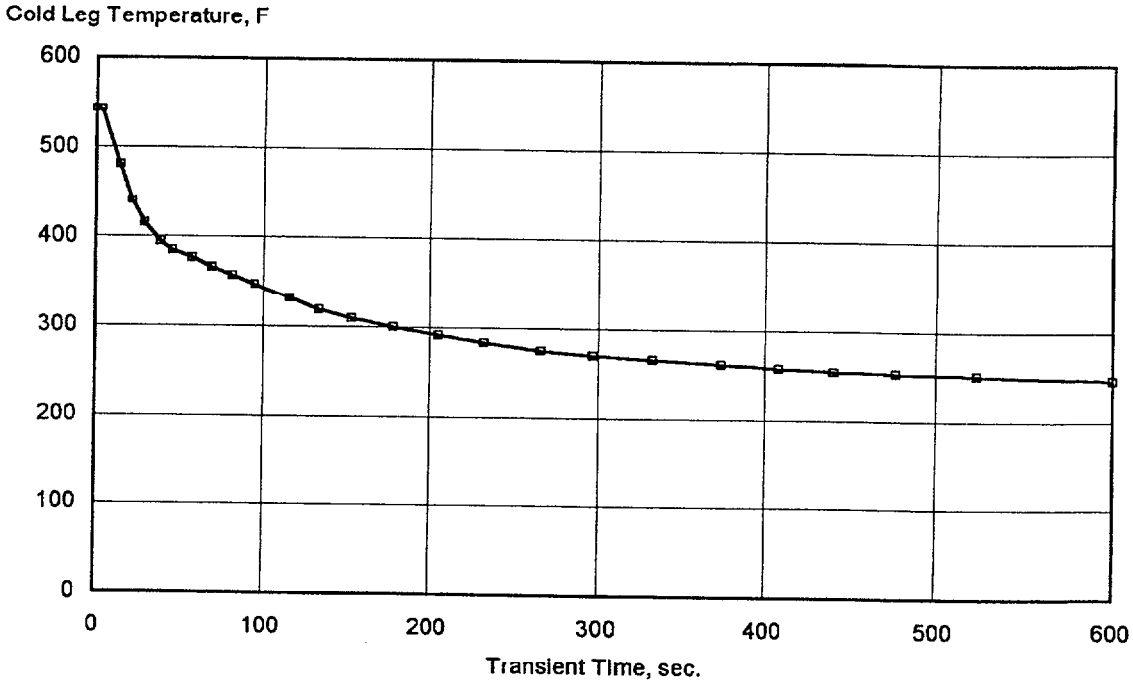

Figure 5-1 Surry Steam Line Break without Offsite Power Transient

6. Evaluation for Levels A and B Service Loadings

Initial flaw depths equal to $^1/_4$ of the vessel wall thickness are analyzed for Levels A and B Service Loadings following the procedure outlined in Section 4.1 and evaluated for acceptance based on values for the J-integral resistance of the material from Section 3.4. The results of the evaluation are presented in Table 6-1, where it is seen that all welds satisfy the acceptance criterion based on J-resistance at a flaw extension of 0.10 in.; i.e., the ratio of material J-resistance to applied J-integral, $J_{0.1}/J_1$, must be greater than 1. From Table 6-1, the minimum value of $J_{0.1}/J_1$ is 1.19 (for the longitudinal weld SA-1526 at Unit 1).

The flaw evaluation for the controlling weld (SA-1526 at Unit 1) is repeated by calculating applied J-integrals for various amounts of flaw extension with safety factors (on pressure) of 1.15 and 1.25 in Table 6-2. The results, along with mean and lower bound J-R curves developed in Table 6-3, are plotted in Figure 6-1. An evaluation line at a flaw extension 0.10 in. is utilized to confirm the results of Table 6-1 by showing that the applied J-integral for a safety factor of 1.15 is less than the lower bound J-integral resistance of the material. The requirement for ductile and stable crack growth is also demonstrated by Figure 6-1 since the slope of the applied J-integral curve for a safety factor of 1.25 is less than the slope of the lower bound J-R curve at the point where the two curves intersect.

Table 6-1 Flaw Evaluation for Levels A and B Service Loadings

Dimensional data:

Ri =	78.95	in.
t =	8.08	in.
ao =	2.0200	in.
da =	0.1000	in.
a =	2.1200	in.
a/t =	0.2624	(0.2 ≤ a/t ≤ 0.5)

Material data:

T =	543	F
E =	27000	ksi
nu =	0.3	

Loading data:

Pd =	2.50	ksi
Pa =	2.75	ksi
SF =	1.15	
CR =	100	F/hr

Geometry factors for initial flaw depth (w/o plasticity correction):

F1 =	1.0513	for pressure loading and axial flaws
F2 =	0.9699	for pressure loading and circumferential flaws
F3 =	1.0624	for thermal loading and both flaw types

Plant	Weld	Orient.	KIp (ksi√in)	KIt (ksi√in)	Sy (ksi)	ae (in.)	ae/t	F1'/F2'	F3'	KIp' (ksi√in)	KIt' (ksi√in)	J1 (lb/in)	J(0.1) at t/4 (lb/in)	J(0.1)/ J1
Surry 1	J726	C	46.59	19.72	57.5	2.1905	0.2711	0.9735	1.0617	47.53	19.70	152	570	3.74
	SA-1494	L	92.41	19.72	57.5	2.3217	0.2873	1.0651	1.0584	97.98	19.64	466	713	1.53
	SA-1585	C	46.59	19.72	57.5	2.1905	0.2711	0.9735	1.0617	47.53	19.70	152	618	4.06
	SA-1526	L	92.41	19.72	57.5	2.3217	0.2873	1.0651	1.0584	97.98	19.64	466	560	1.20
Surry 2	L737	C	46.59	19.72	57.5	2.1905	0.2711	0.9735	1.0617	47.53	19.70	152	557	3.66
	SA-1585	L	92.41	19.72	57.5	2.3217	0.2873	1.0651	1.0584	97.98	19.64	466	654	1.40
	WF-4	L	92.41	19.72	57.5	2.3217	0.2873	1.0651	1.0584	97.98	19.64	466	681	1.46
	R3008	C	46.59	19.72	57.5	2.1905	0.2711	0.9735	1.0617	47.53	19.70	152	646	4.24

Table 6-2 J-Integral vs. Flaw Extension for Levels A and B Service Loadings

Ri =	78.95	in.	Pa =	2.75	ksi
t =	8.08	in.	CR =	100	F/hr
ao =	2.020	in.	Sy =	57.5	ksi

Note: This check on flaw stability per K-4310 is performed for the limiting weld (Longitudinal SA-1526 at Surry 1).

		SF = 1.15						SF = 1.25					
Δa (in.)	a (in.)	KIp (ksi√in)	KIt (ksi√in)	ae (in.)	KIp' (ksi√in)	KIt' (ksi√in)	J1 (lb/in)	KIp (ksi√in)	KIt (ksi√in)	ae (in.)	KIp' (ksi√in)	KIt' (ksi√in)	J1 (lb/in)
0.000	2.020	89.66	19.71	2.2120	94.95	19.70	443	97.46	19.71	2.2403	104.05	19.68	516
0.025	2.045	90.35	19.72	2.2394	95.71	19.69	449	98.21	19.72	2.2681	104.89	19.67	523
0.050	2.070	91.04	19.72	2.2668	96.46	19.67	455	98.95	19.72	2.2960	105.73	19.66	530
0.075	2.095	91.73	19.72	2.2943	97.22	19.66	460	99.70	19.72	2.3238	106.56	19.64	537
0.100	2.120	92.41	19.72	2.3217	97.98	19.64	466	100.45	19.72	2.3517	107.40	19.62	544
0.125	2.145	93.10	19.71	2.3492	98.74	19.62	472	101.20	19.71	2.3796	108.24	19.60	551
0.150	2.170	93.79	19.71	2.3767	99.51	19.60	478	101.95	19.71	2.4075	109.09	19.58	558
0.175	2.195	94.48	19.70	2.4042	100.27	19.58	484	102.70	19.70	2.4354	109.93	19.56	565
0.200	2.220	95.17	19.69	2.4317	101.03	19.56	490	103.45	19.69	2.4633	110.78	19.53	572
0.225	2.245	95.86	19.68	2.4592	101.80	19.53	496	104.20	19.68	2.4912	111.62	19.50	579
0.250	2.270	96.55	19.67	2.4867	102.57	19.51	502	104.95	19.67	2.5192	112.47	19.47	587
0.275	2.295	97.24	19.66	2.5143	103.34	19.48	508	105.70	19.66	2.5471	113.32	19.44	594
0.300	2.320	97.93	19.64	2.5418	104.11	19.45	515	106.45	19.64	2.5751	114.18	19.41	601
0.325	2.345	98.63	19.63	2.5694	104.88	19.41	521	107.20	19.63	2.6031	115.03	19.37	609
0.350	2.370	99.32	19.61	2.5970	105.66	19.38	527	107.96	19.61	2.6311	115.89	19.33	616
0.375	2.395	100.01	19.59	2.6245	106.43	19.34	533	108.71	19.59	2.6591	116.75	19.30	624
0.400	2.420	100.71	19.57	2.6521	107.21	19.31	539	109.47	19.57	2.6872	117.61	19.25	631
0.425	2.445	101.40	19.55	2.6797	107.99	19.27	546	110.22	19.55	2.7152	118.48	19.21	639
0.450	2.470	102.10	19.52	2.7074	108.77	19.22	552	110.98	19.52	2.7433	119.34	19.17	647
0.475	2.495	102.80	19.50	2.7350	109.56	19.18	559	111.74	19.50	2.7714	120.21	19.12	654
0.500	2.520	103.50	19.47	2.7626	110.35	19.14	565	112.50	19.47	2.7994	121.09	19.07	662

Table 6-3 J-R Curves for Evaluation of Levels A and B Service Loadings

Weld: Longitudinal SA-1526 at Surry 1

T =	543	F
t =	8.08	in.
ao =	2.02	in.
ϕsurf =	11.0	10^18 n/cm^2 @ inside surface
Cu =	0.34	
Bn =	0.80	in

Δa (in.)	a (in.)	ϕt 10^{18} n/cm^2)	lnC1	C1	C2	C3	J-R (lb/in) Mean	J-R (lb/in) Low
0.001	2.0210	6.7724	0.25107	1.28540	0.09011	-0.09511	83	58
0.002	2.0220	6.7708	0.25109	1.28542	0.09011	-0.09511	156	109
0.004	2.0240	6.7675	0.25113	1.28547	0.09012	-0.09511	251	176
0.007	2.0270	6.7627	0.25118	1.28555	0.09012	-0.09511	340	238
0.010	2.0300	6.7578	0.25124	1.28562	0.09013	-0.09511	400	280
0.015	2.0350	6.7497	0.25134	1.28575	0.09014	-0.09512	471	329
0.020	2.0400	6.7416	0.25144	1.28587	0.09015	-0.09512	521	364
0.030	2.0500	6.7254	0.25163	1.28612	0.09017	-0.09512	592	414
0.040	2.0600	6.7093	0.25182	1.28637	0.09020	-0.09512	643	449
0.050	2.0700	6.6932	0.25201	1.28661	0.09022	-0.09512	682	477
0.070	2.0900	6.6612	0.25240	1.28711	0.09026	-0.09513	740	517
0.100	2.1200	6.6134	0.25298	1.28786	0.09033	-0.09513	801	560
0.120	2.1400	6.5817	0.25336	1.28835	0.09038	-0.09513	831	581
0.140	2.1600	6.5502	0.25375	1.28885	0.09042	-0.09514	857	599
0.160	2.1800	6.5188	0.25413	1.28934	0.09047	-0.09514	880	615
0.200	2.2200	6.4566	0.25490	1.29033	0.09056	-0.09515	917	641
0.250	2.2700	6.3795	0.25586	1.29157	0.09067	-0.09516	954	667
0.300	2.3200	6.3034	0.25682	1.29281	0.09078	-0.09517	984	688
0.350	2.3700	6.2282	0.25778	1.29405	0.09089	-0.09517	1010	706
0.400	2.4200	6.1540	0.25873	1.29529	0.09100	-0.09518	1032	722
0.450	2.4700	6.0806	0.25968	1.29652	0.09111	-0.09519	1052	735
0.500	2.5200	6.0080	0.26064	1.29776	0.09122	-0.09520	1070	748

Figure 6-1 J-Integral vs. Flaw Extension for Levels A and B Service Loadings

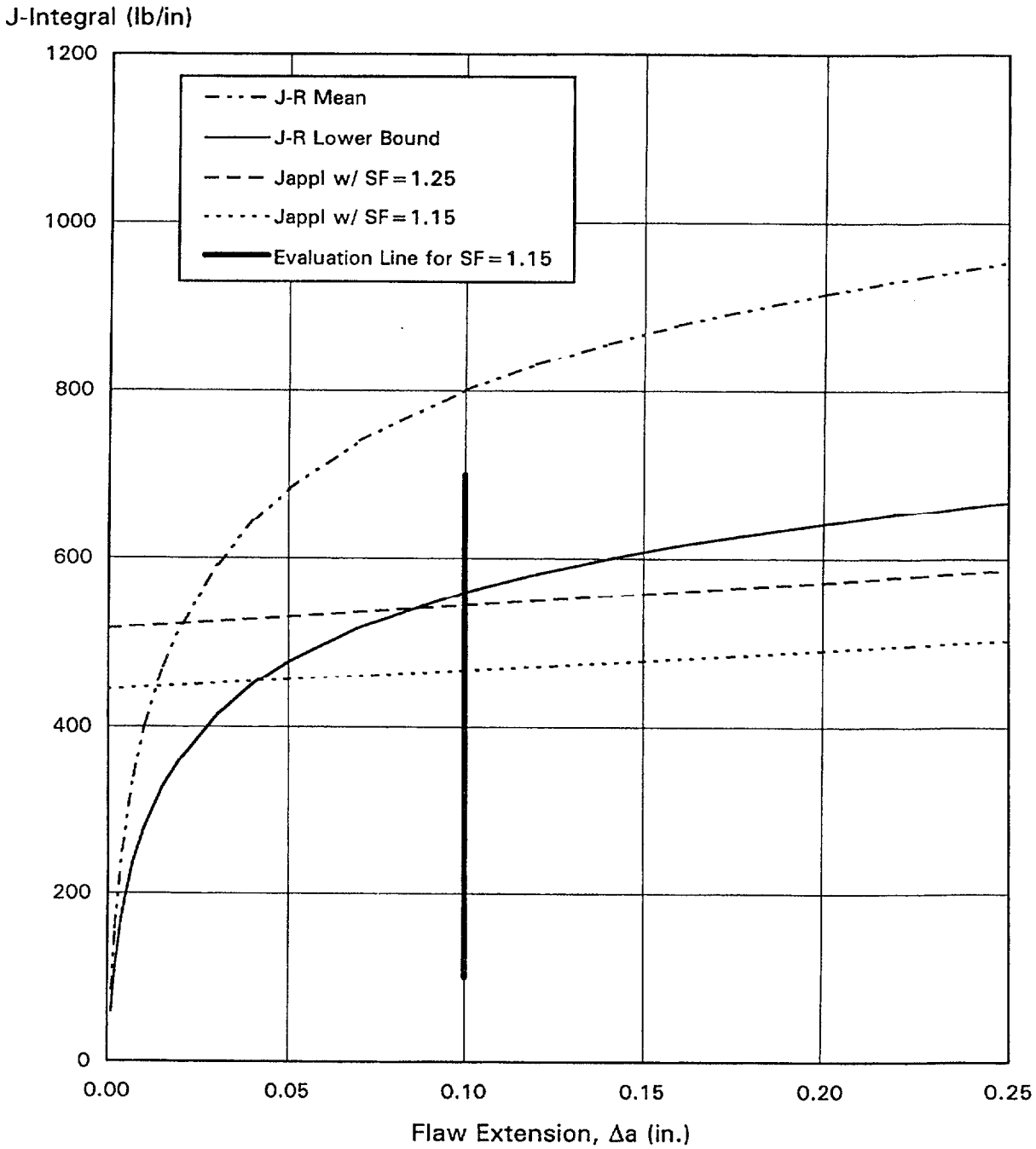

7. Evaluation for Levels C and D Service Loadings

A flaw depth of $^1/_{10}$ the base metal wall thickness is used to evaluate the Levels C and D Service Loadings. Based on the results of Table 6-1 for Levels A and B Service Loadings and flaw depths equal to $^1/_4$ of the wall thickness, the controlling weld for Levels C and D Service Loadings is the SA-1526 longitudinal weld at Unit 1.

Table 7-1 presents applied stress intensity factors, K_I, from the PCRIT pressurized thermal shock analysis of the steam line break transient described in Section 5.2, along with total stress intensity factors after including a contribution of 9.0 ksi√in from cladding, as discussed in Section 4.4. The stress intensity factor calculated by the PCRIT code is the sum of thermal, residual stress, deadweight, and pressure terms. Table 7-1 also shows the variation of crack tip temperature with time for the SLB event. To determine the critical time in the transient for the Level C and D flaw evaluation, allowable stress intensity factors are calculated for both the transition and upper-shelf toughness regions. Transition region toughness is obtained from the ASME Section XI equation for crack initiation [8],

$$K_{Ic} = 33.2 + 2.806 \exp[0.02(T - RT_{NDT} + 100^\circ F)]$$

using an RT_{NDT} value of 281.6 °F from PCRIT for a flaw depth of $^1/_{10}$ the wall thickness, where:

K_{Ic} = transition region toughness, ksi√in
T = crack tip temperature, °F

Upper-shelf toughness is derived from the J-integral resistance model of Section 3.1 for a flaw depth of $^1/_{10}$ the wall thickness, a crack extension of 0.10 in., and a fluence value of 8.8×10^{18} n/cm^2, as follows:

$$K_{Jc} = \sqrt{\frac{J_{0.1}E}{1000(1-\nu^2)}}$$

where

K_{Jc} = upper-shelf region toughness, ksi√in
$J_{0.1}$ = J-integral resistance at Δa = 0.1 in.

Toughness values are given in Tables 7-2 and 7-3 for the transition and upper-shelf regions, respectively, as a function of temperature.

Figure 7-1 shows the variation of applied stress intensity factor, K_I, transition toughness, K_{Ic}, and upper-shelf toughness, K_{Jc} with temperature. The small rectangles on the K_I curve indicate points in time at which PCRIT solutions are available. In the upper-shelf toughness range, the K_I curve is closest to the lower bound K_{Jc} curve at 7.0 minutes in the transient. This time is therefore used as the critical time in the transient at which a postulated flaw of $^1/_{10}$ the base metal wall thickness is evaluated for Levels C and D Service Loadings.

Applied J-integrals are calculated for the controlling weld (SA-1526 at Unit 1) for various flaw depths in Table 7-4 using stress intensity factors from PCRIT for the steam line break transient (at 7.0 min.) and adding 9.0 ksi√in to account for cladding effects. Stress intensity factors are converted to J-integrals by the plane strain relationship,

$$J_{applied}(a) = 1000\frac{K^2_{Itotal}(a)}{E}(1-\nu^2)$$

Flaw extensions from an initial flaw depth of $^1/_{10}$ the wall thickness are determined by subtracting 0.775 in. from the built-in PCRIT flaw depths. The results, along with mean and lower bound J-R curves developed in Table 7-5, are plotted in Figure 7-2. An evaluation line is used at a flaw extension 0.10 in. to show that the applied J-integral is less than the lower bound J-integral of the material, as required by Appendix K [1]. The requirements for ductile and stable crack growth are also demonstrated by Figure 7-2 since the slope of the applied J-integral curve is considerably less than the slopes of both the lower bound and mean J-R curves at the points of intersection.

Referring to Figure 7-2, the Level D Service Loading requirement that the extent of stable flaw extension be no greater than 75% of the vessel wall thickness is easily satisfied since the applied J-integral curve intersects the mean J-R curve at a flaw extension that is only a small fraction of the wall thickness (less than 1%). Also, the remaining ligament would not be subject to tensile instability, as demonstrated below by conservatively postulating an infinitely long longitudinal flaw and calculating the collapse pressure for a flaw depth equal to $^1/_{10}$ the wall thickness plus 0.10 in.

Consider:

a remaining ligament, $c = t - (t/10 + 0.10) = 8.08 - (8.08/10 + 0.10) = 7.172$ in.,

a radius to the crack tip, $R_c = R_i + t/10 + 0.10 = 78.95 + 8.08/10 + 0.10 = 79.858$ in.,

and a yield strength, $\sigma_y = 57.5$ ksi.

The collapse pressure, P_c, defined as the pressure required to produce net section yielding, can be found by equating the average hoop stress in the remaining ligament to the yield strength, as follows:

$$P_c R_c / c = \sigma_y$$

Then

$$P_c = c\sigma_y/R_c = (7.172 \text{ in.})(57.5 \text{ ksi})/(79.858 \text{ in.}) = 5.16 \text{ ksi}$$

which is greater than any postulated accident condition pressure.

Table 7-1 K_I vs. Crack Tip Temperature for SLB

a/t =1/10 a = 0.808 in.				
Time	Temp	PCRIT KIsum	Clad KI	Total KI
0.00	544.0	48.3	9.0	57.3
0.25	543.4	45.7	9.0	54.7
0.50	536.2	41.0	9.0	50.0
0.75	523.2	43.6	9.0	52.6
1.00	509.7	48.3	9.0	57.3
1.50	486.7	55.9	9.0	64.9
2.00	467.5	62.2	9.0	71.2
2.50	450.0	67.8	9.0	76.8
3.00	434.5	72.1	9.0	81.1
3.50	421.2	75.7	9.0	84.7
4.00	409.7	78.6	9.0	87.6
4.50	399.3	81.1	9.0	90.1
5.00	390.0	83.1	9.0	92.1
5.50	382.0	84.6	9.0	93.6
6.00	375.0	85.7	9.0	94.7
6.50	368.7	86.6	9.0	95.6
7.00	363.0	87.3	9.0	96.3
7.50	357.7	87.9	9.0	96.9
8.00	353.1	88.2	9.0	97.2
9.00	345.3	88.4	9.0	97.4
10.00	338.3	88.5	9.0	97.5

Table 7-2 K_{Ic} at $^1/_{10}$ Wall Thickness

KIc Curve at a = 1/10T		
RTndt = 278.2 F		
T (F)	T-RTndt	KIc (ksi√in)
200	-78.2	37.5
210	-68.2	38.5
220	-58.2	39.7
230	-48.2	41.1
240	-38.2	42.9
250	-28.2	45.0
260	-18.2	47.6
270	-8.2	50.8
280	1.8	54.7
290	11.8	59.5
300	21.8	65.3
310	31.8	72.4
320	41.8	81.0
330	51.8	91.6
340	61.8	104.6
350	71.8	120.4
360	81.8	139.7
370	91.8	163.2
380	101.8	192.0
390	111.8	227.2
400	121.8	270.1
410	131.8	322.6
420	141.8	386.7
430	151.8	464.9
440	161.8	560.5
450	171.8	677.3

Table 7-3 K_{Jc} at $^1/_{10}$ Wall Thickness with Δa = 0.10 in.

KJc Curve with Δa = 0.10 in.								
	Fluence =	11.0	x 10^18 n/cm^2 at inside surface					
	=	8.8	x 10^18 n/cm^2 at t/10 + 0.1"					
	Δa =	0.10	in.					
	Cu =	0.34	Wt-%					
	E =	27000	ksi					
	nu =	0.30						
	C4 =	-0.4489						
T (F)	lnC1	C1	C2	C3	Mean J(0.1) (lb/in)	Lower Bound J(0.1) (lb/in)	Mean KJc (ksi√in)	Lower Bound KJc (ksi√in)
200	0.74714	2.11095	0.14785	-0.09967	1135	793	183.5	153.4
250	0.67164	1.95745	0.13906	-0.09898	1076	752	178.7	149.4
300	0.59614	1.81510	0.13028	-0.09828	1020	713	174.0	145.5
350	0.52064	1.68310	0.12149	-0.09759	967	676	169.4	141.6
400	0.44514	1.56071	0.11270	-0.09690	917	641	164.9	137.9
450	0.36964	1.44721	0.10391	-0.09620	869	608	160.6	134.3
500	0.29414	1.34197	0.09512	-0.09551	824	576	156.4	130.7
550	0.21864	1.24438	0.08633	-0.09481	781	546	152.3	127.3
600	0.14314	1.15389	0.07755	-0.09412	741	518	148.3	124.0

Table 7-4 J-Integral vs. Flaw Extension for Levels C and D Service Loadings

Time = 7.0 min.					E =	27000 ksi	
Crack tip at t/10		t =	8.08 in.		nu =	0.3	
(a/t)*40	a (in.)	Δa (in.)	Temp. (F)	KIsum	KIclad	KItotal	Japp (lb/in)
1	0.2020		318.8	49.4	9.0	58.4	115
2	0.4040		334.1	68.3	9.0	77.3	201
3	0.6060		348.8	79.6	9.0	88.6	265
4	0.8080	0.0000	363.0	87.3	9.0	96.3	313
5	1.0100	0.2020	376.6	92.8	9.0	101.8	349
6	1.2120	0.4040	389.6	96.7	9.0	105.7	377
7	1.4140	0.6060	402.0	99.6	9.0	108.6	398
8	1.6160	0.8080	413.7	101.8	9.0	110.8	414
9	1.8180	1.0100	424.8	103.5	9.0	112.5	427
10	2.0200	1.2120	435.3	104.5	9.0	113.5	434
12	2.4240	1.6160	454.3	105.5	9.0	114.5	442
14	2.8280	2.0200	470.9	105.3	9.0	114.3	440
16	3.2320	2.4240	485.0	105.5	9.0	114.5	442
18	3.6360	2.8280	497.0	105.0	9.0	114.0	438
20	4.0400	3.2320	507.0	104.0	9.0	113.0	430
22	4.4440	3.6360	515.2	102.7	9.0	111.7	421
24	4.8480	4.0400	521.8	101.3	9.0	110.3	410
26	5.2520	4.4440	527.1	100.0	9.0	109.0	400
28	5.6560	4.8480	531.2	98.4	9.0	107.4	389
30	6.0600	5.2520	534.4	96.7	9.0	105.7	377
32	6.4640	5.6560	536.8	94.9	9.0	103.9	364

Note: At Δa = 0.10 in., Japp = 331 lb/in

Table 7-5 J-R Curves for Evaluation of Levels C and D Service Loadings

Weld: Longitudinal SA-1526 at Surry 1

Time =	7.00	min.
T =	363.0	F
t =	8.08	in.
ao =	0.808	in.
Fsurf =	11.0	10^18 n/cm^2 @ inside surface
Cu =	0.34	
Bn =	0.80	in

Δa (in.)	a (in.)	Fl 10^{18} n/cm^2)	lnC1	C1	C2	C3	J-R (lb/in) Mean	Low
0.001	0.8090	9.0588	0.49903	1.64712	0.11897	-0.09739	83	58
0.002	0.8100	9.0566	0.49905	1.64716	0.11897	-0.09739	161	113
0.004	0.8120	9.0523	0.49909	1.64722	0.11898	-0.09739	267	187
0.007	0.8150	9.0458	0.49915	1.64732	0.11899	-0.09739	370	259
0.010	0.8180	9.0392	0.49921	1.64742	0.11899	-0.09739	441	308
0.015	0.8230	9.0284	0.49931	1.64759	0.11900	-0.09739	526	368
0.020	0.8280	9.0176	0.49941	1.64775	0.11902	-0.09740	589	411
0.030	0.8380	8.9960	0.49961	1.64808	0.11904	-0.09740	678	474
0.040	0.8480	8.9744	0.49981	1.64841	0.11906	-0.09740	743	520
0.050	0.8580	8.9529	0.50001	1.64874	0.11909	-0.09740	794	555
0.070	0.8780	8.9100	0.50041	1.64940	0.11913	-0.09740	871	609
0.100	0.9080	8.8461	0.50101	1.65039	0.11920	-0.09741	954	667
0.120	0.9280	8.8037	0.50141	1.65105	0.11925	-0.09741	996	696
0.140	0.9480	8.7616	0.50181	1.65171	0.11930	-0.09742	1032	722
0.160	0.9680	8.7196	0.50221	1.65236	0.11934	-0.09742	1064	744
0.200	1.0080	8.6363	0.50300	1.65368	0.11943	-0.09743	1116	780
0.250	1.0580	8.5333	0.50400	1.65533	0.11955	-0.09744	1170	818
0.300	1.1080	8.4315	0.50499	1.65697	0.11967	-0.09745	1214	848
0.350	1.1580	8.3309	0.50598	1.65862	0.11978	-0.09746	1251	875
0.400	1.2080	8.2316	0.50697	1.66026	0.11990	-0.09746	1284	898
0.450	1.2580	8.1334	0.50796	1.66190	0.12001	-0.09747	1313	918
0.500	1.3080	8.0364	0.50895	1.66354	0.12013	-0.09748	1340	937

Figure 7-1 K_I vs. Crack Tip Temperature for SLB

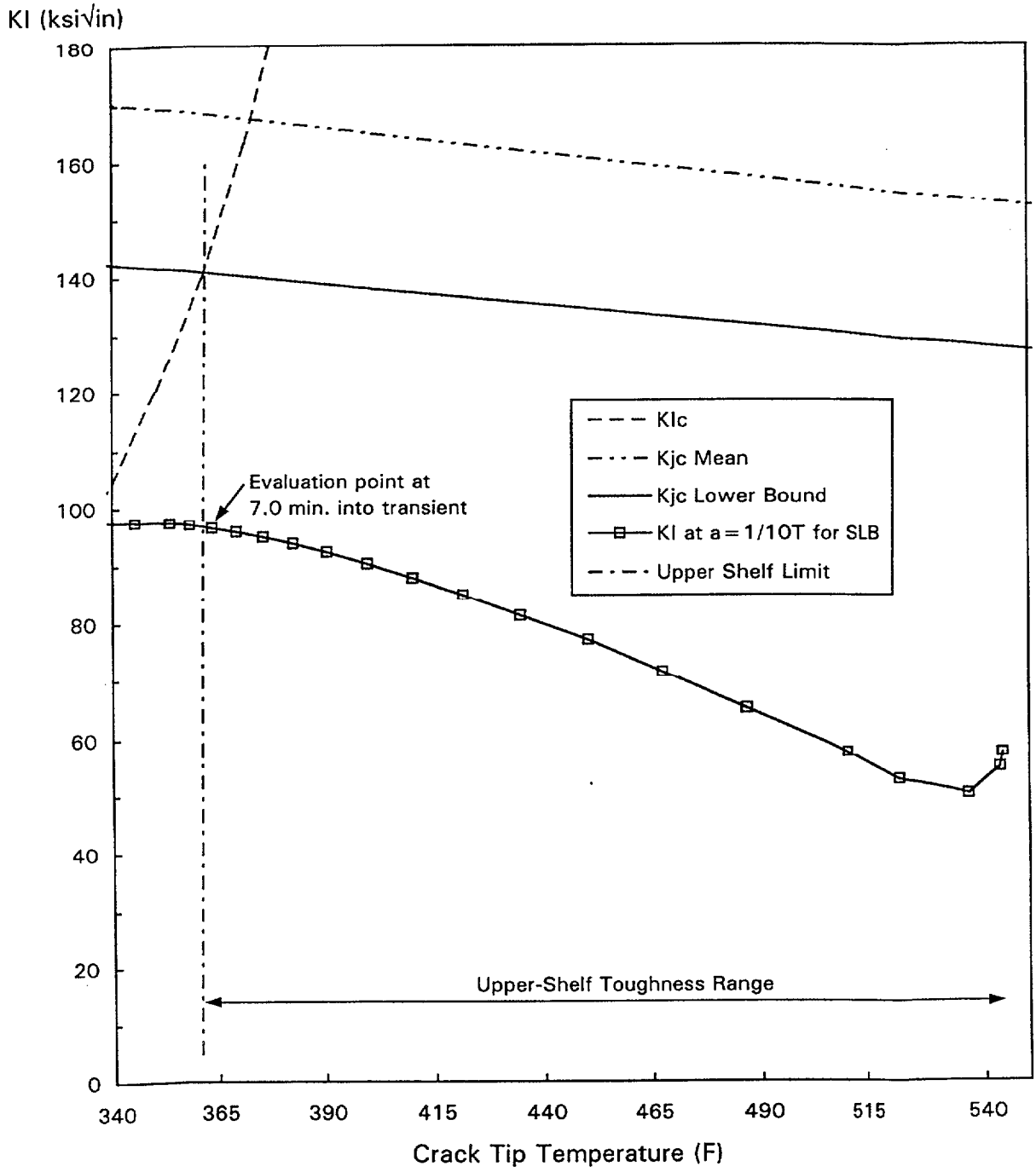

Figure 7-2 J-Integral vs. Flaw Extension for Levels C and D Service Loadings

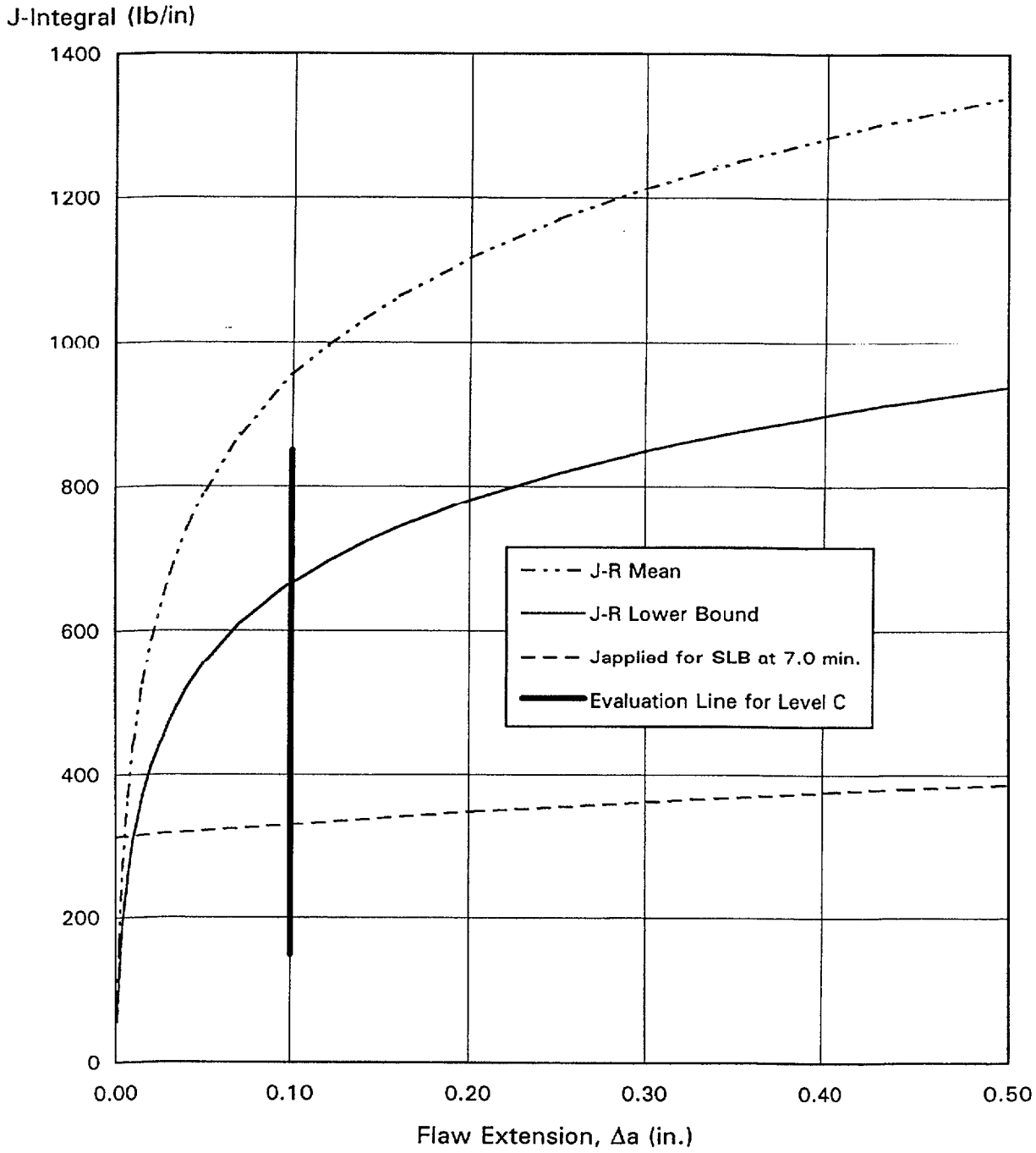

8. Summary of Results

A low upper-shelf fracture mechanics analysis has been performed to evaluate reactor vessel welds at Surry Units 1 and 2 for projected low upper-shelf energy levels at 48 EFPY, considering Levels A, B, C, and D Service Loadings of the ASME Code.

Evidence that the ASME Code, Section XI, Appendix K [1] acceptance criteria have been satisfied for Levels A and B Service Loadings is provided by the following:

(1) Figure 6-1 shows that with a factors of safety of 1.15 on pressure and 1.0 on thermal loading, the applied J-integral (J_1) is less than the J-integral of the material at a ductile flaw extension of 0.10 in. ($J_{0.1}$). The ratio $J_{0.1}/J_1$ = 1.20 which is greater than the required 1.0.

(2) Figure 6-1 shows that with a factors of safety of 1.25 on pressure and 1.0 on thermal loading, flaw extensions are ductile and stable since the since the slope of the applied J-integral curve is less than the slope of the lower bound J-R curve at the point where the two curves intersect.

Evidence that the ASME Code, Section XI, Appendix K [1] acceptance criteria have been satisfied for Levels C and D Service Loadings is provided by the following:

(1) Figure 7-2 shows that with a factor of safety of 1.0 on loading, the applied J-integral (J_1) is less than the J-integral of the material at a ductile flaw extension of 0.10 in. ($J_{0.1}$). The ratio $J_{0.1}/J_1$ is 2.02, which is greater than the required 1.0.

(2) Figure 7-2 shows that with a factor of safety of 1.0 on loading, flaw extensions are ductile and stable since the since the slope of the applied J-integral curve is less than the slopes of both the lower bound and mean J-R curves at the points of intersection.

(3) Figure 7-2 shows that flaw growth is stable at much less than 75% of the vessel wall thickness. It has also been shown that the remaining ligament is sufficient to preclude tensile instability by a large margin.

9. Conclusion

The Surry Unit 1 and 2 reactor vessel beltline welds satisfy the acceptance criteria of Appendix K to Section XI of the ASME Code [1] for projected low upper-shelf Charpy impact energy levels at 48 effective full power years of plant operation.

10. References

1. ASME Boiler and Pressure Vessel Code, Section XI, Division 1, 1992 Edition including December 1993 Addendum.

2. BAW-2118P, Low Upper-Shelf Toughness Fracture Analysis of Reactor Vessels of Turkey Point Units 3 and 4 for Load Level A & B Conditions, November 1991.

3. ASME Boiler and Pressure Vessel Code, Section III, Division 1, Appendices, 1986 Edition.

4. BAW-2150, Materials Information for Westinghouse-Designed Reactor Vessels Fabricated by B&W, December 1990.

5. BAW-1803, Rev. 1, Correlations for Predicting the Effects of Neutron Radiation on Linde 80 Submerged-Arc Welds, May 1991.

6. U.S. Nuclear Regulatory Commission Regulatory Guide 1.99, Revision 2, May 1988.

7. BAW-2178P, Low Upper-Shelf Toughness Fracture Mechanics Analysis of Reactor Vessels of B&W Owners Reactor Vessel Working Group for Level C & D Service Loads, February 1993.

8. Marston, T.U., Flaw Evaluation Procedures: ASME Section XI, Report NP-719-SR, Electric Power Research Institute, Palo Alto, California, August 1978.