FINAL SAFETY ANALYSIS REPORT

for the

HOLTEC INTERNATIONAL STORAGE AND TRANSFER OPERATION REINFORCED MODULE CASK SYSTEM (HI-STORM 100 CASK SYSTEM)

NRC DOCKET NO. 72-1014

HOLTEC REPORT HI-2002444, VOLUME I of II

Prepared by

HOLTEC INTERNATIONAL

CHANGES IMPLEMENTED UNDER 10 CFR 72.48
HI-STORM FSAR, REVISION 1

Table 1
Changes to Multi-Purpose Canisters

ECO NUMBER	72.48 NUMBER	SUMMARY OF CHANGE[1]
1021-1	21	Numerous minor design enhancements and correction of errors and inconsistencies on drawings discovered during initial MPC-68 fabrication. These changes were previously reviewed and approved by the NRC under Amendment 1 to the HI-STAR 100 System (Docket 72-1008).
1021-2	11	Modify the MPC-68 design as follows: (1) Revise Note 11 on Dwg. 1401, Sht. 1 and Note 12 on Dwg. 1402, Sht. 2 to add the following "for the weld area and adjacent base metal, an additional allowance of 0.02" loss in nominal base metal thickness is allowed over the entire length of the weld". (2) Delete the tolerance of +/- 20' on the 45 degree dimension for the lower fuel spacer hole chamfer in item # 34a.
1021-4	49	Change cut-out dimensions in bottom of Dresden/Humboldt Bay damaged fuel container.
1021-7	49	Modify the MPC-68 design as follows: (1) Add a weld detail to the drain line guide tube. (2) Clarify the material requirements for the lower fuel spacer columns
1021-8	15	Add two holes and associated set screws and welds to each of the MPC-68 vent and drain port cover plates. Add set screws to BOMs as new item 31.
1021-13	8	Miscellaneous changes to fabricator instructions for MPC-68 identification plates.
1021-14	28	Minor change to MPC-68 lid dimensions to facilitate fit-up and lid welding in the field.
1021-15	49	Editorial correction to MPC-68 BOM number call-out.
1021-16	42	Allow groove weld as an alternative to fillet weld in MPC-68 basket corner joints
1021-18	44	Modify MPC-68 lift lug design as follows: (1) Delete 3/8" fillet weld between the lift lug baseplate and the MPC shell. (2) Add 1/4" fillet weld between the lift lug baseplate and the MPC shell on bottom side of lift lug baseplate. (3) Add 1/4" fillet weld between the lift lug baseplate and MPC shell on top side of lift lug baseplate, where accessible.
1021-19	48	Modify the MPC-68 lift lug as follows: (1) Increase the thickness of the lift lug and lift lug baseplate to 1". (2) Lower the centerline of the hole by 1/4". (3) Increase the lift lug baseplate width to 3-1/2", (4) Delete the 1-1/2" radius on the lift lug. (5) Increase the width of lift lug bottom edge to 3-1/2". (6) Increase length of lift lug to 9-1/2".
1021-21	56	Allow alternate stitch weld patterns for MPC-68 sheathing-to-cell wall weld provided an equivalent amount of weld is used.

[1] For simplicity, the MPC models are described as MPC-68, MPC-24, and MPC-32. The specific applicability of these changes to the other MPC models, such as the MPC-24E, MPC-68F, etc is delineated in the ECO.

CHANGES IMPLEMENTED UNDER 10 CFR 72.48
HI-STORM FSAR, REVISION 1

Table 1
Changes to Multi-Purpose Canisters

ECO NUMBER	72.48 NUMBER	SUMMARY OF CHANGE[1]
1021-22	62	Modify the MPC-68 design as follows: (1) Change description of item 16, drain tube guide, on BM-1479 from 2-1/2" to 3" diameter. (2) on Dwg. 1402 Sht. 4 delete weld detail "4 places (typ)", from the drain guide tube and replace with " where accessible around item 16 (typ)". (3) on Dwg. 1402, Sht. 4, delete dimensions and note that states "(all dimensions are reference)" on Section M-M.
1021-23	98	Modify the MPC-68 design as follows: (1) On Dwg. 1401, Sht. 4, add Note 7: "7. Fabricator may alter any stitch weld (number and length) provided the minimum total length of the weld along the weld line is maintained" (2) Revise basket dimension "(68.78 max*)" to be "(65.78 max*)" on Dwg. 1401, Sht. 2.
1021-27 1022-21	395	Modify the MPC-68 and MPC-24 designs as follows: (1) Increase the OD of the MPC drain & vent port caps from 2-1/4" to 2-15/32" max. (2) Reduce the threaded length inside of the cap to only the bottom 1/2" min. (3) Change the material for the vent and drain tubes and caps from "304 SS" to "SS".
1021-28	284	Fabrication detail changes to the MPC-68 aluminum heat conduction elements.
1021-29 1022-17	17	Revise Table 2.2.6 of the HI-STORM FSAR to change the ITS classification of the MPC-68 and -24 basket supports (flat plates), from "ITS-B" to "NITS".
1021-34	477	Modify the MPC-68 design as follows: (1) Extend the length of the drain line by ½". (2) Change the drain line from 2" SCH 10 to 1 1/4" SCH 40, and (3) add a 5/8" deep, 5" diameter sump.
1021-38	550	Modify the MPC-68 design as follows: (1) Change the seal washer dimensions from 1.48" OD to 1.48" REF. OD and hole diameter from 0.281" to 0.259" REF. (2) Change the drain tube guide and drain tube guide plates weld from 1/8" fillet 1-3 stitch to 1/8" fillet all around (where accessible still applies). (3) Change shell and baseplate weld from a full penetration weld (no particular type was previously specified) to a double bevel weld with back gouge. (4) Change basket support dimensions from 1/4" on both items to .22 REF. (5/32 min.) Change 1.00" width dimension on basket support channel to 1.06". Change 2.50" width dimension on basket support shim from 30 to 2.56". Change total thickness of basket support channel from 3/8" to 3/8" or thickness as required. Change total thickness of basket support shim from 5/16" to 5/16" or thickness as required. (5) Change drain guide tube 1 1/2" flare height dimension to 1 1/2" REF. Change the flare diameter from 5 1/8" to 5.19" ref. Flare end to be seal welded only instead of full penetration. (6) Modify lift lug to remove 1/2" x 45 deg. chamfer. Change 9 ½" +/ 1/8" length to 9 3/8" min. Change lift lug hole placement from 1 7/8" +/- 1/4" to 1 3/4" min and 2 3/8" max. Change top corner opposite shell to be fillet with radius of 1 3/4". (7) Modify vent drain cap to incorporate 1/16" chamfers on all four corners of the drive end and change the seal washer recess

CHANGES IMPLEMENTED UNDER 10 CFR 72.48
HI-STORM FSAR, REVISION 1

Table 1
Changes to Multi-Purpose Canisters

ECO NUMBER	72.48 NUMBER	SUMMARY OF CHANGE[1]
		diameter from 1.50" to 1.50" REF. (8) Re-issue design drawings 1401 and 1402 in Solidworks software to replace Cadkey drawings 1401, 1402, and BM-2479[2].
1021-39	552	Optional MPC-68 lid design created design to enable the MPC lid to be fabricated from one or two pieces (split top and bottom).
1021-41	615	Create new MPC-68 fuel basket licensing drawing 3928 for use in transportation and storage SAR documents.
1021-43	594	Modify the MPC-68 design as follows: Sheet 2: Change Note 29 "the total length and width of items 27, 28, 30, 31, 32, 33, & 34 may be made from more than one piece. Welds between shim pieces shall be 1/8" or equal to the shim pieces thickness, if less than 1/8" thick, welds shall be single groove, 1-8 pitch" to read "the total length of items 27, 28, 30, 31, 32, 33, 34, 40, & 41 may be made from more than one piece. The ends of the pieces do not need to be welded together."
1021-44	598	Add new alignment shims to the MPC-68 basket to maintain the configuration of the MPC basket with respect to the shell during fabrication handling and shipping.
71188-43	252	Modify the dimensions of the MPC-68 lift lugs to be more compatible with lifting equipment.
1022-3	49	Incorporate a stainless steel guide tube for the MPC-24 drain line.
1022-9	113	Modify the MPC-24 design as follows: (1) Change the cell ID from 8.75" to 8.92", cell pitch from 10.777" to 10.906" , Boral sheathing thickness from 0.06" to 0.0235" and the angle size from 9/32" to 5/16". (2) Modify the cell configuration to be similar to MPC-24E/EF. (3) Create Solidworks design drawings 3469 (MPC-24 fuel basket) and 3471 (MPC-24/24E enclosure vessel) to replace Cadkey drawings 1395, 1396, and BM-1478 for MPC-24. (4) Except for Boral and sheathing, all dimensions changed to fractional. (5) Change safety classification of basket support flat plates from ITS-B to NITS. (6) Add more spacers between cell plates. (7) Allow spacer welds to be stitch welds rather than full-length. (8) Allow alternate stitch weld patterns for MPC-24 sheathing-to-cell wall weld provided an equivalent amount of weld is used. (9) Modify fabrication detail instructions for cell construction. (10) Allow groove welds as option for basket corner connections. (11) Clarify location of wide and narrow Boral panels on peripheral fuel cells.

[2] The original Solidworks drawing numbers issued to replace Cadkey drawings 1401, 1402, and BM-1479 were 3768 and 3769. However, drawing numbers 3768 and 3769 were reverted back to 1401 and 1402 (in Solidworks, with BOM incorporated on the drawing) to avoid having to revise numerous fabrication shop documents.

CHANGES IMPLEMENTED UNDER 10 CFR 72.48
HI-STORM FSAR, REVISION 1

Table 1
Changes to Multi-Purpose Canisters

ECO NUMBER	72.48 NUMBER	SUMMARY OF CHANGE[1]
1022-10	186	Modify the MPC-24E/EF design as follows: (1) Create new Solidworks design drawing 3474 for MPC-24E/EF fuel basket to replace Cadkey drawings 2889, 2890, 2891, 2892, BM-2898, and BM-2899, as applicable to the MPC-24E/EF fuel basket. (2) Change basket wall weld size from 0.1875" to 0.197"to correct a drafting error in the initial version of the MPC-24E/EF fuel basket drawing and match structural analysis and original design and licensing basis approved by NRC in Amendment 1. (3) Make other minor changes to MPC-24E/EF basket as described in ECO 1022-9, Changes 4-11, for MPC-24 fuel basket.
1022-12	205	Authorize Solidworks design drawing 3471 for MPC-24E enclosure vessel to replace Cadkey drawings 2889, 2890, 2891, 2892, BM-2898, and BM-2899, as applicable to the MPC-24E enclosure vessel.
1022-14	280	Numerous minor design enhancements and correction of errors and inconsistencies on drawings discovered during initial MPC-68 fabrication are also incorporated into the MPC-24 design. These changes were previously reviewed and approved by the NRC under Amendment 1 to the HI-STAR 100 System (Docket 72-1008).
1022-15	314	Modify the axial location of MPC lift lugs.
1022-16	397	(1) Minor detail changes (e.g., dimensions, tolerances) to improve MPC-24 fuel basket fabrication. (2) Increase size and pitch for weld connecting center post to fuel cell angles from 3/16-12 to ¾24.
1022-19	398	Minor detail changes (e.g., dimensions and tolerances) to improve MPC-24/24E enclosure vessel fabrication.
1022-23	438	Modify the MPC-24 design as follows: (1) Modify flux gap spacer plates to facilitate fabrication. (2) Modify BOM for optional spacers shown on Sheet 3 at location A5. Dimensions as specified on Sheet 3, NITS, QTY as reqd, Alloy "X". (3) On sheet 3, Location A4, change weld for spacer to one-sided fillet weld, 1/16", 1-3. (4) Add Note "21. If Item 19 is placed next to sheathing, weld must be placed on side of item 19 facing away from sheathing." (5) On Sheet 3, Location A4, change note for new item 19 from "3 places along length (max) - top, middle and bottom (app)" to "5 places along length (max) - evenly spaced (app)". (6) Update the weight of the basket on Sheet 1 to 20,000 lbs for Dwg. 3469. (7) On DWG 3469, Sheets 3 and 6, change all notes "VT per Note 6E" to "VT per Note 6". (8) On Dwg 3469, Sheet 2, Location D1, after "Heat Conduction Elements" add "(Optional for HI-STORM 100 System)".

CHANGES IMPLEMENTED UNDER 10 CFR 72.48
HI-STORM FSAR, REVISION 1

Table 1
Changes to Multi-Purpose Canisters

ECO NUMBER	72.48 NUMBER	SUMMARY OF CHANGE[1]
1022-24	473	Modify the MPC-24 design as follows: (1) Detail of vent and drain tubes; delete the tolerances on the following dimensions: 1.750", 1.125", 1.375", 0.050" and change the dimension 1.375" to 1.373". (2) Detail of drain line coupling; delete the tolerances on the following dimensions: 2.38", 1.38". (3) Detail of vent and drain cap; change the wording, "drill and tap 1/4-20UNC x 3/4" DP." to read " 1/4-UNC, drill 3/4" DP (REF.) and tap 1/2" deep and delete the tolerances on the 1.100" and 1.500" dimensions. (4) Add note 29: "the total length of items 28 and 29 may be made from more than one piece". (5) The following statement should be added to note 17: "fabricator may alter any stitch weld (number and length) provided the minimum total length along the weld line is maintained."
1022-25	491	Modify the MPC-24 design as follows: (1) Replace Boral width and length tolerances with minimum dimensions. (2) Specify the nominal length as a reference dimension.
1022-28	486	Change the welds between the MPC-24 basket angles and the main basket structure from 0.197" to 0.08".
1022-31	537	Editorial clarifications and minor changes to MPC enclosure vessel to facilitate fabrication and fit-up.
1022-35	557	Add new alignment shims to the MPC-24 basket to maintain the configuration of the MPC basket with respect to the shell during fabrication handling and shipping.
1022-36	561	Modify width of anti-rotation shims.
1022-37	552	Modify the MPC-24 design as follows: (1) Optional MPC lid design created design to enable the MPC lid to be fabricated from one or two pieces (split top and bottom). (2) Allow optional equivalent materials for fuel spacer and lid plug bolts.
1022-38	615	Create new MPC-24 and MPC-24E/EF fuel basket licensing drawings 3925 and 3926 for use in transportation and storage SAR documents.
1023-3	176	Modify the MPC-24 design as follows: (1) Modify dimension of lift lugs. (2) Clarify several fabrication-related notes. (3) Modify MPC lid minimum dimension. (4) Correct call-out for fuel spacer bolts.
1023-6	385	Replace Boral width and length tolerances with minimum dimension.
1023-10	615	Create new MPC-32 fuel basket licensing drawing 3927 for use in transportation and storage SAR documents.

MAJOR CHANGES IMPLEMENTED UNDER 10 CFR 72.48
HI-STORM FSAR, REVISION 1

Table 2
Changes to HI-STORM Overpack

ECO NUMBER	72.48 NUMBER	SUMMARY OF CHANGE
1024-1	233	Numerous minor design changes based on lessons learned from first-time fabrication of the HI-STORM 100 overpacks. The changes primarily involve minor dimensional and tolerance adjustments, weld configurations, and notes to the fabricator.
1024-3	236	Modify the HI-STORM 100 overpack lid lifting holes in lid top plates.
1024-7	53	Modify the HI-STORM 100 overpack outer shell to accommodate optional grounding straps.
1024-8	67	Modify the HI-STORM 100 overpack design as follows: (1) Decrease the groove weld size between the inlet vent vertical plate and the outer shell from 3/4" to 3/8". (2) Change the groove weld between the inlet vent vertical plate and the inner shell to a 3/8" fillet weld. (3) Decrease the fillet weld between the radial plate and the inner shell and outer shell from 1/2" to 3/8". (4) Decrease the fillet weld between the radial plate to the baseplate from 3/4" to 3/8".
1024-9	69	Modify number and location of pedestal centering shims on the HI-STORM 100 overpack.
1024-10	78	Modify material specification for the HI-STORM 100 overpack radial channels to allow galvanized material.
1024-11	75	Modify requirements for the HI-STORM 100 radial channel-to-overpack inner shell weld to allow intermittent weld (2-inch length at top, middle, and bottom).
1024-12	80	Modify the HI-STORM 100 overpack design as follows: (1) Increase the size of the screw that attaches the inlet & exit vent screens to 1/4". (2) Revise the configuration of the exit vent screen to improve fabricability. (3) Increase the thru hole size in overpack top plate. (4) Change the weld between the overpack top plate and outer shell to a 1/4" fillet weld. (5) Change the weld between the overpack top plate and the inner shell to a 1/4" fillet weld 2"-6". (6) Change the weld between the overpack top plate and exit vent vertical plate to a 1/4" fillet weld.
1024-13	81	Increase the threaded hole diameter in the HI-STORM 100 overpack pedestal plates from 3/4-10 UNC x 1" min DP to 1- 7 or 8 UNC x 1" min DP.
1024-14	84	Modify the HI-STORM 100 overpack design as follows: (1) Cut a 12" diameter hole in the center of the pedestal baseplate . (2) Cut four 12" diameter holes in the pedestal baseplate, located at 90 degrees from each other and 21" from the centerline.
1024-15	88	Delete the non-structural seal weld between the HI-STORM 100 overpack top plate and the anchor blocks.
1024-16	91	Allow for field trimming of the HI-STORM 100 overpack top plate up to ¾" in local areas, as necessary to allow quality fit-up and field welding after installation of concrete.

MAJOR CHANGES IMPLEMENTED UNDER 10 CFR 72.48
HI-STORM FSAR, REVISION 1

Table 2
Changes to HI-STORM Overpack

ECO NUMBER	72.48 NUMBER	SUMMARY OF CHANGE
1024-18	97	Modify the HI-STORM 100 overpack design as follows: (1) Change the weld between the overpack top plate the outer shell to a 1/8" fillet weld. (2) Change the weld between the overpack top plate and the inner shell to a 1/8" fillet stitch weld. (3) Change the weld between the overpack top plate and the exit vent vertical plate to a 1/8" fillet weld.
1024-19	100	Allow alternate means of attaching the HI-STORM 100 overpack nameplate.
1024-21	104	Modify the HI-STORM 100 overpack design as follows: (1) Delete the shield shell. (2) Increase the minimum required density of concrete in the overpack body to be 155 lbs./cubic ft to compensate. (3) Revise the appropriate structural calculations and FSAR text to account for a maximum (dry) concrete density of 160.8 pcf to accommodate normal concrete density variation.
1024-24	201	Modify HI-STORM FSAR Table 2.2.6, Section 3.4.4.3.2.2, and Appendix 3.L to clarify ASME Code applicability regarding the HI-STORM 100 and 100S overpack top lid studs and nuts. The reference to ASME III, NF in Table 2.2.6 is changed to ASME II, since material is still consistent with these requirements. The analysis described in Appendix 3.L continues to use ASME III, NF allowable stresses. Modify FSAR Section 3.4.4.3.2.2, and Appendix 3.L to make shimming of the top lid holes optional.
1024-25	189	Modify the HI-STORM 100 and 100S overpack designs as follows: (1) Delete the air content requirement for overpack concrete from FSAR Table 1.D.1. (2) Delete the test requirement specification for air content, "ASTM C231", from FSAR Table 1.D.2.
1024-28	68	Modify the HI-STORM 100 and 100S overpack designs as follows: (1) Revise HI-STORM FSAR Subsection 9.1.5.2 to allow gamma scanning prior to, or after the installation of the water jacket. (2) revise HI-STORM FSAR App. 1.C to allow for the use of equivalent paint for Carboline 890 and Thermaline 450. (3) Add the clarification that the Thermaline 450 is to be applied to maximum extent practical on the HI-STORM overpack. (4) Allow only Thermaline 450 to HI-STORM overpack. (5) Revise FSAR Table 2.2.6 for HI-STORM overpack to make the paint "NITS". (6) Delete product data sheet and MSDS for Carboline 890 from the FSAR.
1024-29	297	HI-STORM FSAR, Appendix 1.D, Section 1.D.4, Paragraph 4: Revise curing requirements for HI-STORM 100 and 100S overpack concrete.

MAJOR CHANGES IMPLEMENTED UNDER 10 CFR 72.48
HI-STORM FSAR, REVISION 1

Table 2
Changes to HI-STORM Overpack

ECO NUMBER	72.48 NUMBER	SUMMARY OF CHANGE
1024-30	159	Modify the HI-STORM 100 and 100S overpack designs as follows: (1) Revise FSAR Appendix 1.D to: a) specify that fabrication shall be performed such that access shall be maintained to the overpack body & pedestal cavity to place the concrete, b) clarify that non-shrink grout shall be applied to any concrete elevation deviation and remove the requirement that the top plate be welded after curing of the concrete, c) delete all sentences after the first one in the 6th paragraph, and d) delete the 7th paragraph. (2) Reduce the minimum compressive strength for overpack concrete from 4,000 to 3,300 psi. (3) Change the nominal maximum aggregate size from 3/4" to 1". (4) Clarify the air content requirement as 4.5 to 7.5% in lieu of only 6%.
1024-31	401	Minor modifications to allow better quality fabrication and installation of HI-STORM 100 overpack inlet vent duct screens.
1024-33	422	Modify the HI-STORM 100 overpack radial channel attachment design to incorporate adjustable mounts to allow shop adjustment based on as-built dimensions of overpack body.
1024-34	460	Modify the HI-STORM 100 overpack design as follows: (1) Change the Project Number from 5014 to 1024 on Drawings 1495, Sheets 1, 2, 3, 4, 5, and 6, and Drawings 1561, Sheets 1, 2, 3, and 4, and BM-1575 Sheets 1 and 2. (2) Editorial change to include the shield shell in the drawings, but to add a note that the shield shell was deleted on 6/01. (3) BM-1575, Sheet 2, Rev. 10: Add Item 50, 1/4" Dia., 1" LG. SS Screw, Quantity 32, to the Bill of Materials. (4) Dwg. 1495, Sht. 5: Delete Note 5 per the change to the channel design (ECO 1024-33). (5) Dwg. 1561, Sht. 1: Delete Note 2 per deletion of the threaded holes in ECO 1024-3. (6) BM-1575, Sht. 1: Item 30 description should read 1 ½"6 UNC x 1 ½" DP bolt. (7) Dwg. 1495, Sht. 1: Delete threaded holes in MPC to reflect changes to the MPC design. (8) Dwg. 1561, Sht. 1: Delete from note :"For fabrication. Sealed by plug weld after fabrication." Add call out for Item 30, lid plugs. (9) Dwg. 1561, Sht. 4: Delete depiction of groove weld between exit vent horizontal and vertical plates. (10) Sht. 1495, Sht. 2: Revise Note 4 to read: "All exposed surfaces of the overpack shall be painted with Thermaline 450 or equivalent. Threaded holes shall not be painted." (11) Dwg. 1495, Sht. 1: Remove component drawing table from the drawing. (12) Dwg. 1561, Sht. 1: Change the tolerance on the bolt circle from +/- ¼ to +/- 1/8". (13) Dwg. 1495, Sht. 2: Change the dimension of the overall height of the pedestal from 22 (Ref.) to 22 +/- ¼". (14) Change the dimension of the pedestal concrete from 16 ½ +/ ¼ to 16 ½ (REF.)
1024-35	435	Add to the note for the HI-STORM 100S optional inlet vent gamma shield cross plates: "For the single-sided 1/8" fillet weld where geometry prohibits 1-6" stitch weld, apply 2" of weld to each end."

MAJOR CHANGES IMPLEMENTED UNDER 10 CFR 72.48
HI-STORM FSAR, REVISION 1

Table 2
Changes to HI-STORM Overpack

ECO NUMBER	72.48 NUMBER	SUMMARY OF CHANGE
1024-36	439	Add a seal weld between the lid shield ring drain pipe, and the HI-STORM 100 overpack lid top plate.
1024-37	442	Modify the HI-STORM 100S overpack to allow for a second, taller version of this overpack design. There will now be a 232-inch high design and a 243-inch high design, known as HI-STORM 100S(232) and HI-STORM 100S(243), respectively.
1024-38	446	Modify the design of the HI-STORM 100 overpack inlet air duct vent screens to improve fabricability.
1024-39	453	Modify the design of the HI-STORM 100 overpack inlet air duct vent screens to address fit-up problems.
1024-42	520	Modify the HI-STORM 100S overpack design as follows: (1) Separate drawing details for the optional gamma shield cross plates have been added. (2) The notes for the inlet and outlet gamma shield cross plates now refer to sheet 12 for the optional shielding.
1024-44	507	Modify the HI-STORM 100 overpack design as follows: (1) Decrease the length of the lid shell from 11-3/4" to 10-1/2". (2) Increase the diameter of the lid bottom plate from 67" to 70". The tolerance on the 70" diameter shall be +/-1/4". (3) The weld between the lid shell and the lid bottom plate is changed to a 1/8" fillet weld. (4) Create BOM item 56, shear ring, placed on the 103" BC equally spaced at 90 degrees apart. This plate is welded to the bottom of the HI-STORM lid with a 3/8" fillet weld along the 73 1/2" ID ring and along the vents. (5) The overpack top plate is changed to a 3/4" THK. 109" ID x 132" OD plate (cut in four pieces). This plate replaces the existing overpack top plate, is welded to the top of the outer shell with a 1/4" fillet weld along the outer radius of the plate, and a 1/8" fillet weld along the vents. (6) Delete Note 2 from Dwg. 1561 Sh. 2. (7) Delete MPC cavity lengths from overpack drawing (8) Delete Note 14 from Dwg. 1495 Sh. 2. (9) Delete shield shell details from Dwg. 1495 Sh. 2, Dwg. 1495 Sh. 5, BM-1575 Sh. 1, and add Notes 15 and 16 to list dates of shield shell deletion and lid/top plate redesign. (10) change the material for item 16 to add "or SA193-B7"
1024-45	545	Revise the HI-STORM FSAR for the HI-STORM 100S overpack as follows: (1) On page 3.M-19, increase the weight of the shield block concrete and the surrounding metal shell from 5,716 lb to 5,881 lb. (2) In the footnote below the table on page 3.4-44, change the safety factor for the HI-STORM 100S lid from 1.658 to 1.625. (3) In Table 3.4.9, change the safety factor for the HI-STORM 100S "lid top plate bending" from 1.658 to 1.625.

MAJOR CHANGES IMPLEMENTED UNDER 10 CFR 72.48
HI-STORM FSAR, REVISION 1

Table 2
Changes to HI-STORM Overpack

ECO NUMBER	72.48 NUMBER	SUMMARY OF CHANGE
1024-46	541	Modify the HI-STORM 100S overpack design as follows: (1) Change the weld between the inner shell and the radial plate, and between the radial plate and the horizontal vent plate, from a 3/8" fillet weld on both sides to a 3/16" fillet weld on both sides. (1) Change the weld between the outer shell and the radial plate a 3/8" fillet weld on both sides to a 3/16" fillet weld on both sides. (3) Delete the optional longitudinal and circumferential full penetration weld from the inner shell (4) Delete the 72-27/32" diagonal dimension between the anchor blocks.
1024-47	542	Modify the HI-STORM 100 overpack design as follows: (1) Change the weld between the radial plate and the inner shell, outer shell and the baseplate, respectively, from 3/8" fillet welds on both sides to a 3/16" fillet weld on both sides. (2) Weld grounding lugs to the outer shell instead of drilling and tapping holes to connect the grounding straps. (3) Change the longitudinal and circumferential weld on the inner shell from a 1-1/4" full penetration to a 3/8" groove weld on both sides. (4) Add a +/- 3/4" tolerance to the anchor block bolt circle. (5) Add Note 6, "The center-to-center dimension between adjacent anchor blocks is 72-7/8" +/- 1/2". (6) Dwg. 1561, Sht. 3: Move the arrow for the weld between Items 13 & 11 to point to the outside of Item 13. (7) Delete "Seal Weld" from the 1/4" fillet weld between the exit vent horizontal plate and the outer shell. (8) Delete the 1/2" double fillet weld between the inner shell and the radial plates. (9) Change the note on the longitudinal and circumferential weld for the outer shell to say "(OR 1/4" DOUBLE V)". (10) Delete "(or double V)" from the weld call-out for the inner shell circumferential weld.
1024-50	578	Modify the HI-STORM 100 overpack design as follows: (1) Change the specification for the exit vent vertical plate, pedestal plate, shield block shell, and grounding block, to allow the use of SA 515 Grade 70 as an alternate to SA 516 Grade 70. (2) The top lid may be fabricated out of multiple pieces. These pieces will be joined using a 1/4" partial penetration double bevel groove weld.
1024-51	581	Modify the HI-STORM 100S overpack design as follows: (1) Change the material specification for the pedestal baseplate, lid shield ring, lid vent side plate, shield block shell, and strap block, to allow SA 515 GR. 70 as an alternate to SA 516 Gr. 70. (2) The top lid may be fabricated out of multiple pieces. These pieces will be joined using a 1/4" partial penetration double bevel groove weld.

MAJOR CHANGES IMPLEMENTED UNDER 10 CFR 72.48
HI-STORM FSAR, REVISION 1

Table 2
Changes to HI-STORM Overpack

ECO NUMBER	72.48 NUMBER	SUMMARY OF CHANGE
1024-52	579	Modify the HI-STORM 100S overpack design as follows: (1) Change the ITS Category of the lid washers from NITS to ITS-B. (2) Change the part description for the washers to read "1/2" MIN. THK. x 3-1/2" ID x 6" MIN OD." (3) Change the material specification for the lid washers from S/S to "304 S/S". (4) Change the outer diameter of the lid washers from 6" MIN OD to 8" MIN OD.
1024-54	590	Modify the HI-STORM 100 overpack design as follows: (1) Modify inlet screen base to permit welding directly to the overpack, increase height and width to 18" x 24", remove welds of screen base to the screen and frame. Provide threaded holes in the base and clearance holes in the frame to attach the screen/frame to the base. Weld separate base of screen assembly directly to the outer shell in lieu of drilling and tapping. Delete 1/2"x1"x13" bar at bottom of inlet screen. (2) Modify outlet screen assemblies to increase height of screen assembly to 10-1/2", add mounting base 3/8" x 1/2" around the bottom and sides of the overpack screen opening. Provide threaded holes in the base and clearance holes in the frame to attach screen and frame to the base. Separate base will be welded directly to outer shell.
1024-55	601	Modify HI-STORM 100 overpack design as follows (1) Change tolerances for gamma shield cross plates and inner cavity height. (2) Change lid stud washer material from stainless steel to carbon steel and make washers required instead of optional.
1024-56	603	Minor changes to inlet vent screen design to improve fabrication and installation on HI-STORM 100 overpack.
1024-57	612	Modify the HI-STORM 100S overpack design as follows: (1) Change the location of the single-sided groove weld for the pedestal shell from the far side to the near side (i.e., from the inside to the outside). (2) Allow the pedestal shell and shield block shell to be made from multiple pieces. (3) Add the approximate weights for the overpack body and the top lid into the proposed bill of lading. (4) Add the overpack center of gravity table for the HI-STORM 100S, Versions (232) and (243) with and without the lid. (5) Change the CG for the HI-STORM 100S (232) in Table 3.2.3 of the HI-STORM FSAR from 111.4 to 111.7.
1024-60	617	Modify the HI-STORM 100 and 100S overpack designs to change the ITS Category of the bolt anchor blocks from ITS-A to ITS-B.

MAJOR CHANGES IMPLEMENTED UNDER 10 CFR 72.48
HI-STORM FSAR, REVISION 1

Table 3
Changes to HI-TRAC 125 Transfer Cask

ECO NUMBER	72.48 NUMBER	SUMMARY OF CHANGE
1025-1	52	Numerous minor design changes to the HI-TRAC 125 transfer cask design based on lessons learned from first-time fabrication of the transfer cask. The changes primarily involve minor dimensional and tolerance adjustments, weld configurations, correction of drawing typographical errors, and notes to the fabricator. This ECO also includes configuration changes for the pool lid and transfer lid door to improve fabricability.
1025-2	238	Additional minor design changes to the HI-TRAC 125 transfer cask based on lessons learned from first-time fabrication of the HI-TRAC 125 transfer cask.
1025-3	239	Revise HI-TRAC 125 transfer lid door lock bolt from 2 7/8" diameter to 3" diameter. Revise thread diameter to 3-4 UNC and the hole diameter to 3 1/4" to accommodate the revised bolt dimension. Revise reference dimension between lid centerline and bolt centerline to 50.50" to account for revised bolt diameter.
1025-4	102	Make the following modifications to the HI-TRAC 125 transfer cask design: (1) Reduce the size of the following welds to 5/8" partial penetration welds on the HI-TRAC body: a) inner and outer shells to the top and bottom flanges; b) pocket trunnion to outer shell; c) lifting trunnion block to inner shell, outer shell, and top flange. (2) Reduce the size of the following welds to 5/8" partial penetration welds on the pool lid: outer ring to top plate. (3) Reduce the size of the following welds to 3/4" partial penetration welds on the transfer lid housing: lid top and bottom plates to lid intermediate plate and lead cover plate. (4) Increase the width of transfer lid top and bottom plates from 93" to 93.5". (5) Eliminate tabs under the bottom flange. (6) Revise the FSAR at Appendix 3.E to remove the 0.45 weld efficiency factor.
1025-5	46	Modify the HI-TRAC 125 water jacket design as follows: (1) Delete radial channels. (2) Delete enclosure shell panels. (3) Add twelve (12) 1-1/4" thick radial ribs welded to outer shell. (4) Add twelve curved enclosure shell panels welded to radial ribs. (5) Add four short ribs.

MAJOR CHANGES IMPLEMENTED UNDER 10 CFR 72.48
HI-STORM FSAR, REVISION 1

Table 3
Changes to HI-TRAC 125 Transfer Cask

1025-6	50	Modify the HI-TRAC 125 transfer cask and transfer lid design as follows: (1) Change the transfer lid C/L-to-holes dimension for door lock bolts from 51.0" REF. to 51 5/8" REF. (2) Change the distance between holes for door lock bolts from 14" REF to 6-¼" REF. (3) Change the transfer lid CL-to-holes dimension for door lock bolts from 7" REF to 3-1/8" REF. (4) Change transfer lid C/L-to-alignment holes dimension from 51.5" REF to 57.5" REF. (5) Change diameter of lead pour holes from 1.5" with 2.5" counter-bore to 3" thru. (6) Replace lead pour hole caps with steel plugs. (7) Add cutouts to transfer lid top plate. (8) Add 1/2" x 45 degree chamfer on inner edges of transfer housing top and bottom plates. (9) Revise weld between wheel track and lid bottom plate to be a stitch weld. (10) Revise pool lid gasket and groove dimensions. (11) Revise depth of 36 tapped holes in pool lid to be 2" REF. (12) Change width of wheel track from 0.75" to 1.0". (13) Change dimension 8.375" to 8.625" for lid intermediate plate, lead cover plate, lead cover side plate, and lid housing stiffener and change transfer lid housing dimension from 11.875" to 12.125.
1025-7	60	Modify the HI-TRAC 125 transfer lid design as follows: (1) Change the weld sizes between the lid intermediate plate and the lid top and bottom plates from 1.5" (full penetration) weld to 0.75" groove weld. (2) Change the weld size between the lead cover plate and the lid top plate, lid bottom plate, and lead cover side plate 1 from 1.0" (full penetration) weld to 0.5" groove weld.
1025-8	79	Modify the HI-TRAC 125 transfer cask and transfer lid design as follows: (1) Change 5/16" I.D. fillet weld between pool lid outer ring to pool lid top plate a 5/8" fillet weld and change 5 between pool lid outer ring to pool lid top plate to a ¼" fillet weld. (2) Add Detail D to Dwg. 1880, Sht. 5 to show a close-up of the welds between pool lid outer ring and pool lid top plate to pool lid bottom plate. (3) Reduce full penetration weld between enclosure shell panels and water jacket end plates, pocket trunnion, and short rib to a 3/16" groove weld with a 3/16" fillet reinforcement. (4) Increase the quantity of water jacket pressure relief coupling and valves from one to two. (5) Delete "Bronze" from the description of the water jacket pressure relief and drain valves. (6) Increase the thickness of wheel track to ¼". (7) Delete the flush requirement for the 5/16" groove weld between door side and bottom plates. (8) Provide cut-away views to see door side plates in side view. (9) Revise Note 3 on Dwg.1880, Sht. 2, Rev. 9 and Note 12 on Dwg. 1928, Sht. 2, Rev. 9 to read as follows: "3) Except as noted otherwise, all groove welds are full penetration (45 degree angle minimum). Use of backing, root opening size, and back gouging (for welding from both sides) are at fabricator's discretion. Partial penetration welds also require 45 degree angle minimum." (10) Decrease

MAJOR CHANGES IMPLEMENTED UNDER 10 CFR 72.48
HI-STORM FSAR, REVISION 1

Table 3
Changes to HI-TRAC 125 Transfer Cask

		the weld size between inner shell and bottom flange from a 5/8" to ½" groove weld. (11) Revise detail of drain pipe to reconfigure the pipe from being a bent pipe with a 90 degree elbow at a specified radius to a fabricated pipe with a 90 degree corner. (12) Add Note 14 to Dwg.1928, Sht. 2 as follows: "14) Fabricator may add additional welds provided approval is received from Holtec." Change diameter of pool lid outer ring from 93" O.D. to 93.75" O.D. (13) Add centerline dimension to Dwg. 1880, Sht. 8. (14) Change dimension of water jacket end plate 26.8125" (15) Add 90° REF angle to Dwg. 1880, Sht. 8. (16) Correct orientation of weld symbols on Dwg. 1880, Shts. 2 and 8.
1025-9	83	Add Note 14 to dwg. 1928, Sht. 2 "14) Fabricator may add additional welds provided approval is received from Holtec."
1025-10	86	Change the length of the transfer lid door lock bolt from 10.875" to 11.25".
1025-11	99	Modify the HI-TRAC 125 transfer cask design as follows: Dwg: 1880, Sheet 3, change "(2) 1 1/2 diameter drain holes @ 180deg. Apart on 83 1/4 +/- 1/4 diameter bolt circle in water jacket end plate" to "(8) 3/4 diameter drain holes in water jacket end plate on 83 1/4 +/- 1/4 diameter bolt circle @ 42 deg, 86 deg, 132 deg, 177 deg, 222 deg, 261 deg, 312 deg, and 357 deg."
1025-12	103	Modify the HI-TRAC 125 transfer cask and transfer lid design as follows: (1) Dwg. 1880, Sh. 4: Add note: "2) Finish to be applied between 85.5 and 87.5 diameters" and add "See Note 2" to finish mark. (2) Remove flush symbols from welds between pocket trunnion and the outer shell and enclosure shell panel. (3) Remove flush symbols from welds between lifting trunnion block and the inner shell and top flange. (4) Change door top plate dimensions 21.5" to 24" and 46.5" to 49". (5) Dwg. 1880, Sh. 5: Detail B: add note "2) Spot face as necessary for a flat surface", and delete 1.25" dimension in Detail B, add "See note 2" to 2" dimension. (6) Change thickness of top lid outer and inner rings from 3.75" to 3.25"; Top lid top plate: Change OD from 71.875" to 71.375" and change the ID from 29" to 28.5". (7) Miscellaneous weld size and type changes to improve fabricability. (8) Delete finish requirement for bottom flange, delete Note 2 from Dwg 1880, Sht. 4. (9) Delete 5/16" groove weld symbol between lower water jacket shell and top lid top plate.

MAJOR CHANGES IMPLEMENTED UNDER 10 CFR 72.48
HI-STORM FSAR, REVISION 1

Table 3
Changes to HI-TRAC 125 Transfer Cask

1025-13	118	Modify the HI-TRAC 125 transfer cask design as follows: (1) Add Note 4 to Dwg.1880, Sht. 2 as follows: "4) Fabricator may add additional welds provided approval is received from Holtec." (2) Change the diameter of the hole in the water jacket for the pressure relief coupling from 1" Dia. to 2" Dia. REF. (3) Dwg. 1880, Sht. 3: Add "REF" to hole dimensions in the Section A-A View. (4) Add a 1/4" fillet weld between the water jacket end plate and the short ribs and add a 3/16" groove and 3/16" fillet weld between the enclosure shell panel and the short ribs. (5) Change the width of the short ribs, from 5.861" to 6.688".
1025-14	145	Modify the HI-TRAC 125 transfer lid as follows: (1) Drill and tap four 0.5" diameter holes, 0.5" REF deep into each lead cover plate. The holes should be placed 37.75" REF from each end of the plate. One hole should be 1" REF from the top edge to the center, the holes should be 4.75" REF center to center. (2) Drill and tap two 0.5" diameter. holes, 0.5" deep into each lead cover side plate, on the horizontal centerline of the side plate. The holes should be 1" REF from the top edge of the plate and 4.75" REF center to center.
1025-15	148	BM-1880 Sht. 1: Add note #3: "3) For Item 18, SA 516 GR. 70 may be replaced with SA-203-E or SA-350-LF3 or equivalent"
1025-16	183	Change the following dimensions on the transfer lid lifting lug: 1" diameter to 1.375" diameter, height of 3.5" to 3.75", width of 3" to 3.5".
1025-17 1026-20	213	Modify Chapter 5 of the HI-STORM FSAR to discuss the analysis of the maximum 1/4 inch gaps between the lead plates and the surrounding steel in the bottom lids of the HI-TRAC transfer cask.
1025-18 1026-21	57	Change HI-STORM FSAR Subsection 9.1.5.2 and Table 9.1.3 to allow UT testing of the lead plate in the pool lid and transfer lid doors in lieu of a gamma scan.
1025-19 1026-22	66	Revise the HI-STORM FSAR to account for two pressure relief valves in the HI-TRAC transfer cask water jacket.
1025-20	308	Modify the HI-TRAC 125 transfer cask design as follows: (1) Delete the thermal expansion foam in the top lid. (2) Delete page 1.C-2, thermal foam technical data sheet, from the HI-STORM FSAR and revise FSAR page 1.C-1, Table 2.2.6, and Table 3.4.2 to delete thermal expansion foam.
1025-21 1026-24	106	Revise the HI-STORM FSAR, Table 9.1.4 to change the call-outs for the following welds: (1) "radial channels to the outer shell" becomes "radial ribs and short ribs to outer shell". (2) "radial channel to enclosure shell dial ribs and short ribs to enclosure shell panel". (3) "Pocket trunnion to enclosure shell panel and radial channel" becomes "Pocket trunnion to enclosure shell panel and radial rib" These are conforming changes for previous design change.

MAJOR CHANGES IMPLEMENTED UNDER 10 CFR 72.48
HI-STORM FSAR, REVISION 1

Table 3
Changes to HI-TRAC 125 Transfer Cask

1025-22 1026-25	309	Modify the HI-STORM FSAR as follows: (1) Delete transfer cask top lid diagram from Figure 8.1.37, HI-TRAC Lid Bolt Torquing Pattern. (2) In Table 8.1.5, change the torque value for the HI-TRAC top lid bolts from 39 ft-lbs to "Hand tight".
1025-23 1025-36 1025-36	154	Add alternate 125-ton transfer cask design, called HI-TRAC 125D. This alternate design eliminates the transfer lid and pocket trunnions and incorporates a new ancillary device called the HI-STORM mating device. Create licensing drawing 3768 for HI-TRAC 125D.
1025-24 1026-26	68	(1) Revise HI-STORM FSAR Subsection 9.1.5.2 to allow gamma scanning prior to, or after the installation of the water jacket. (2) Revise HI-STORM FSAR App. 1.C to allow for the use of equivalent paint for Carboline 890 and Thermaline 450. (3) Add the clarification that the Thermaline 450 is to be applied to maximum extent practical on the HI-STORM overpack. (4) apply only Thermaline 450 to HI-STORM overpack (FSAR App. 1.C, Table 2.2.6, & Note 4 on Dwg. 1495, Sheet 2). (5) Revise FSAR Table 2.2.6 under HI-STORM overpack to make the paint "NITS". (6) Delete product data sheet and MSDS for Carboline 890LT from the FSAR.
1025-25 1026-23	94	Change Table 9.1.3 of the FSAR to incorporate the deletion of the transfer cask identification plate in ECO 1026-16
1025-27	436	Modify the HI-TRAC 125D transfer cask design as follows: (1) Add 1/4" x 45-degree bevel weld between bottom flange gusset and bottom flange, at outer edge of gusset. (2) Add 1/4" x 45-degree bevel weld between bottom flange gusset and water jacket bottom plate at outer edge of gusset.
1025-28	445	Add double-sided 3/8" fillet weld between bottom flange gussets and outer shell of HI-TRAC 125D.
1025-29	455	Modify the HI-TRAC 125D transfer cask design as follows: (1) Add a gasket for the water jacket port cover. Gasket is to be 1/32 thick x 3 - 1/2 OD. (2) Revise the part description of BOM item 22 to state "1/2-13UNCx1/2 LG. FH Machine Screw". (3) Revise Item 45 part description to state "1-8UNC x 1-5/8 LG. Set Screw" (4) Revise Item 27 part description to state "1-8UNC x 3 HEX. HD. Bolts" and Item 35 part description to 1 Flat Washer. (5) Make ITS categ ory of BOM item 22 "NITS". (6) Revise ITS category for Items 40, 44 and 45 to NITS from ITS-B. (7) Add Dwg. Note 10 as follows: "Fabricator may add additional welds with Holtec approval. Holtec approval is not required for additional tack welds." (8) Revise the material specification for the water jacket outer shell to allow "SA 515 Gr. 70 or SA 516 Gr. 70". (9) Revise several weld details to show welds on the underside. (10) Provide a call out for water jacket top plate parts in Section Z-Z and Detail K on Sheet 6 and scale down the cross-hatch. (11) Revise the note for Item 40 to state "1/2 FH Machine Screws" instead of "1/2 FHSCS".

MAJOR CHANGES IMPLEMENTED UNDER 10 CFR 72.48
HI-STORM FSAR, REVISION 1

Table 3
Changes to HI-TRAC 125 Transfer Cask

1025-30	451	Replace 5/8" fillet weld between HI-TRAC outer shell and bottom flange with a 5/8" x 45 degree partial-penetration groove weld.
1025-31 1026-27	454	Revise FSAR Chapter 9 to clarify actions to be taken if radiation effectiveness testing for HI-TRAC transfer cask (gamma scan) yields unacceptable results.
1025-32	567	Modify the HI-TRAC 125D transfer cask design as follows: (1) Change the material for the lead fill hole plugs from "C-1018 Carbon Steel" to "Carbon Steel" and add "SA36 or Better Properties" to the Remarks column of the BOM. (2) In HI-STORM FSAR Table 2.2.6, add SA36 to the material specification for lead fill hole plugs. (3) In the BOM, change the part description for Item 43 from "Half Coupling" to "Full Coupling" and change part name accordingly. (4) In the BOM, add a new Item 47 (Quantity = 2, Material = Commercial, Description = 2"-3000 lb. Street Elbow, ITS Category = NITS) to be positioned between the coupling and the water jacket relief valve. Add callout and note to water jacket weldment view stating "Item 47 Vertically Aligned". (5) Update weights in Proposed Bill of Lading (using Solidworks + 5%), in water jacket weldment detail and in lid weldment detail to reflect removal of site-specific items from the generic design. Eliminate redundant rib plate callouts of outer shell weldment detail. (6) In the Proposed Bill of Lading, change the number of pop valves from 1 to 2 and change part name in BOM. (7) In the baseplate weldment detail, change symbol for weld between the bottom flange and the flange gusset from a 60 degree V-groove to a 45 degree bevel. (8) In the baseplate weldment detail, add a covering 3/8" fillet to symbol for groove weld between the bottom flange and the flange gusset. In the shell assembly detail, delete the covering fillet leader line from symbol for weld in Section P-P. (9) In the BOM, change the ITS classification of lid washer from ITS-B to NITS. (10) Add 1" x 45 degree chamfer to top, inside corner of flange gusset. (11) Correct section view in baseplate weldment detail. (12) In detail views of short and long rib plates, show chamfer on all four corners of each item. (13) In the pool lid weldment, add the note "VT per Note 3b and PT Final Surface per Note 3a or MT Final Surface per Note 3c" to the symbol for the outside fillet between the pool lid ring and the pool lid top plate.

MAJOR CHANGES IMPLEMENTED UNDER 10 CFR 72.48
HI-STORM FSAR, REVISION 1

Table 4
Changes to HI-TRAC 100 Transfer Cask

ECO NUMBER	72.48 NUMBER	SUMMARY OF CHANGE
1026-1	52	Numerous minor design changes to the HI-TRAC 100 transfer cask design based on lessons learned from first-time fabrication of the transfer cask. The changes primarily involve minor dimensional and tolerance adjustments, weld configurations, correction of drawing typographical errors, and notes to the fabricator. This ECO also includes configuration changes for the pool lid and transfer lid door to improve fabricability.
1026-2	240	Additional minor design changes to the HI-TRAC 125 transfer cask based on lessons learned from first-time fabrication of the HI-TRAC 125 transfer cask.
1026-3	241	Revise HI-TRAC 100 transfer lid door lock bolt from 2 7/8" diameter to 3" diameter. Revise thread diameter to 3-4 UNC and the hole diameter to 3 1/4" to accommodate the revised bolt dimension. Revise reference dimension between lid centerline and bolt centerline to 48" to account for revised bolt diameter.
1026-4	242	Make the following modifications to the HI-TRAC 100 transfer cask design: (1) Reduce size of the following welds to 5/8" partial penetration welds on the HI-TRAC body: a) inner and outer shells to the top and bottom flanges; b) pocket trunnion to outer shell; c) lifting trunnion block to inner shell, outer shell, and top flange. (2) Reduce size of the following welds to 5/8" partial penetration welds on the pool lid: outer ring to top plate. (3) Reduce size of the following welds to 3/4" partial penetration welds on the transfer lid housing: lid top and bottom plates to lid intermediate plate and lead cover plate. (4) Increase width of transfer lid top and bottom plates from 89" to 89.5". (5) Eliminate tabs under the bottom flange. (6) Revise the FSAR at Appendix 3.E to remove the 0.45 weld efficiency factor.
1026-5	43	Modify the HI-TRAC 100 water jacket design as follows: (1) Revise the OD of the pool lid outer ring 89.00" to 89 ¾". (2) Revise the outside circumferential weld between the pool lid outer ring and the pool lid top plate from 3/4 in. bevel weld to 5/16 in. fillet weld. (3) Revise the inside circumferential weld between the pool lid outer ring and the pool lid top plate from 5/16 in. fillet weld to 3/4 in. fillet weld. (4) Revise the drain bolt, from socket cap bolt to socket screw. (5) Delete the 2" counter-bore in the pool lid outer ring. Revise the machining detail of the pool lid outer ring accordingly.
1026-6	41	Reduce the groove weld size between the lower water jacket shell and the water jacket end plate, bottom flange, and the pocket trunnion base from full penetration to 5/8".

MAJOR CHANGES IMPLEMENTED UNDER 10 CFR 72.48
HI-STORM FSAR, REVISION 1

Table 4
Changes to HI-TRAC 100 Transfer Cask

1026-7	45	Modify the HI-TRAC 100 transfer cask design as follows: (1) Delete radial channels. (2) Delete enclosure shell panels. (3) Add ten (10) 1-1/4" thick radial ribs welded to outer shell. (4) Add ten curved enclosure shell panels welded to radial ribs. (5) Add four short ribs. (6) Revise enclosure shell OD from 89" to 88.75". (7) Add optional washers for top lid studs/nuts and pool lid bolts. (8) Revise the welding detail for the radial ribs to the outer shell, and the enclosure shell panel. (9)
1026-8	51	Modify the HI-TRAC 100 transfer cask and transfer lid design as follows: (1) Change the transfer lid C/L-to-holes dimension for door lock bolts from 48.5" REF. to 49-1/8" REF. (2) Change the distance between holes for door lock bolts from 14" REF to 6-¼" REF. (3) Change the transfer lid CL-to-holes dimension for door lock bolts from 7" REF to 3-1/8" REF. (4) Change transfer lid C/L-to-alignment holes dimension from 51.5" REF to 57.5" REF. (5) Change diameter of lead pour holes from 1.5" with 2.5" counter-bore to 2.5" thru. (6) Replace lead pour hole caps plugs with steel plugs. (7) Add 1/2" x 45 degree chamfer on inner edges of transfer housing top and bottom plates. (8) Revise weld between wheel track and lid bottom plate to be a stitch weld. (9) Revise pool lid gasket and groove dimensions. (10) Revise depth of 36 tapped holes in pool lid to be 2" REF. (11) Change width of wheel track from 0.75" to 1.0". (12) Change dimension 8.375" to 8.625" for lid intermediate plate, lead cover plate, lead cover side plate, and lid housing stiffener and change transfer lid housing dimension from 11.875" to 11.625.
1026-9	243	Modify the HI-TRAC 100 transfer cask design as follows: (1) Revise Note 2 on Dwg 2145, Sht. 2 to read as follows: "2) except as noted otherwise, all groove welds are full penetration (45 degree angle minimum). Use of backing, root opening size, and back gouging (for welding from both sides) are at fabricator's discretion. Partial penetration welds also require 45 degree angle minimum." (2) Decrease the weld size between the inner shell and the bottom flange from a 5/8" to 1/2" groove weld.

MAJOR CHANGES IMPLEMENTED UNDER 10 CFR 72.48
HI-STORM FSAR, REVISION 1

Table 4
Changes to HI-TRAC 100 Transfer Cask

1026-10	244	Modify the HI-TRAC 100 transfer cask and transfer lid design as follows: (1) Increase the quantity of the pressure relief coupling and pressure relief valve to 2. (2) Increase the diameter of the pressure relief coupling 2". (3) Delete "bronze" from the description of the water jacket pressure relief and drain valves. (4) Increase the thickness of the wheel track 1/4". (5) Increase the width of the door side plates to 5.75". (6) Change the 5/16" fillet weld between the door bottom plate and the door wheel housing, door side plate, and door end plate to be a groove weld. (7) Delete the flush requirement for the 5/16" groove weld between the door side plate and the door bottom plate. (8) Increase the width of the door side plate to 5.75". (9) Provide cut-away views to show door side plates in side view.
1026-11	59	Revise the detail of the drain pipe to reconfigure the pipe from being a bent pipe with a 90 deg. elbow at a specified radius to a fabricated pipe with a 90 deg. corner.
1026-12	58	Modify the HI-TRAC 100 transfer lid design as follows: (1) Change the weld size between the lid intermediate plates and the lid top and bottom plates from 1.5" (full penetration) weld to 0.75" groove weld. (2) Change the weld size between the lead cover plate and the lid bottom plate, lid top plate, and lead cover side plate from 1.0" (full penetration) weld to 0.5" groove weld.
1026-13	64	Modify the HI-TRAC 100 transfer cask design as follows: (1) Reduce 5/16" fillet weld between the pool lid outer ring and the pool lid top plate to a 1/4" fillet weld. (2) Reduce the full penetration weld between the enclosure shell panels and the water jacket end plates, the short ribs, and the pocket trunnion base to a 3/16" groove weld with a 3/16" fillet reinforcement. (3) Reduce the full penetration weld between the enclosure shell panels and the water jacket end plate to a 3/16" groove weld with a 3/16" fillet reinforcement.
1026-14	82	Modify the HI-TRAC 100 transfer lid design as follows: (1) Decrease the width of the transfer lid door interface plate from 3-7/8" to 3-3/4" on the bill-of-material. (2) Revise Dwg. 2152, Sht. 2 to depict the distance from the bottom of the transfer lid door to the door interface plate from 4" to 4-1/4".
1026-15	87	Change the length of the door lock bolt on the HI-TRAC 100 transfer lid from 10.875" to 11.25".
1026-16	94	Clarify the cask identification information to be stamped on the top flange.

MAJOR CHANGES IMPLEMENTED UNDER 10 CFR 72.48
HI-STORM FSAR, REVISION 1

Table 4
Changes to HI-TRAC 100 Transfer Cask

1026-17	107	Modify the HI-TRAC 100 transfer lid design as follows: (1) Drill and tap two 0.75" diameter. holes, 0.75" REF deep into the door end plate, 2" REF on either side of the vertical centerline, centered on the horizontal centerline. (2) Drill and tap four 0.5" diameter. holes, 0.25" REF deep into the lead cover plate. The holes should be placed 37.75" REF from each end of the plate. One hole should be 1" REF from the top edge to the center, the holes should be 4.75" REF center to center. (3) Drill and tap two 0.5" diameter holes, 0.25" deep into the lead cover side plate, at 40" REF from the transfer lid housing centerline. The holes should be 1" REF from the top edge of the plate and 4.75" REF center-to-center.
1026-18	109	Revise the HI-TRAC 100 top lid stud BOM description from "1-8UNC x 4-3/8" LG. Stud (full length thread)" to " 1-8UNC x 5" LG. Stud (full length thread with wrench flat at one end)"
1026-19	170	Modify the HI-TRAC 100 transfer lid design as follows: (1) Dwg. 2152, Sht. 2: add Note "14) Threaded holes used to attach the transfer lid door actuators shall be located as necessary for alignment." (2) Dwg. 2152, Sht. 2: Add Note "15) Lifting pad is optional. The alternative is to use at least (4) of the (36) 1-8 UNC threaded holes with appropriate rigging equipment to support the Transfer Lid Weight of 18,000 lbs." (3) Machine (4) 3/4 - 10 UNC x 1-1/4 minimum depth in each transfer door. (4) Tack weld 2x2 square tubing on the top surface of the transfer lid bottom plate. (5) Drill four 1-1/4" diameter hole in the end of the lid intermediate plate. (6) Increase the diameter of the hole in the lifting lug, from 1" to 1-3/8" diameter. (7) Add BOM Item 28, top lid extension, 1-1/2" THK. x 5.75 WD x 89 LG plate.

MAJOR CHANGES IMPLEMENTED UNDER 10 CFR 72.48
HI-STORM FSAR, REVISION 1

Table 5
Changes to Ancillary Equipment

ECO NUMBER	72.48 NUMBER	SUMMARY OF CHANGE
1027-27	12	Revise FSAR Table 2.1.10 to correct the fuel assembly lengths and associated fuel spacer lengths for Dresden plant fuel.
1027-31	302	Modify the damaged fuel container lead-in to be a solid, machined piece instead of a pipe.
1027-33	305	Revise FSAR Table 8.1.5 to change the torque value for the MPC lift cleat bolts from 453 ft-lbs to 793 ft-lbs.
1027-53	513	Address the use of an optional HI-TRAC transfer cask lid spacer.

MAJOR CHANGES IMPLEMENTED UNDER 10 CFR 72.48
HI-STORM FSAR, REVISION 1

Table 6
Changes to the FSAR not Associated with Hardware Changes

ECO NUMBER	72.48 NUMBER	SUMMARY OF CHANGE
5014-36	71	Correct reactivity results tables in Chapter 6 to reflect the correction of minor modeling error for Siemens Atrium 9x9 IX and SVEA-96 assemblies.
5014-49 5014-50	464 488	Change the number of fuel rods for the GE-8x8r assembly type from 60 to 62 in table 4.3.5 of the HI-STORM FSAR.
5014-51	502	The following changes are made to the HI-STORM FSAR to conform to values in the ASME Code: (1) In Table 3.3.1, change the value of e (i.e., young's modulus) at -40 deg F from 28.14 to 28.82; (2) In Table 3.3.2, change the value of e at -40 deg f from 29.34 to 29.95; (3) In Table 3.3.3, change the temperature value in the first row of the Table from -120 to -20; (4) In Table 3.3.3, change the value of e in the first row of the table from 28.5 to 28.2; (5) In Table 3.3.3, change the value of alpha (i.e., coefficient of thermal expansion) in the first row of the table from 6.20 to "---"; (6) In Table 3.3.4 under SB637-N07718, change the value of alpha at 70 deg F from 6.7 to 7.05; (7) In Table 3.3.4 under SA193 Grade B7 (2.5 to 4 inch diameter), change the temperature in the first row of the table from "<200" to "100"; (8) In Table 3.3.4 under SA193 Grade B7 (2.5 to 4 inch diameter), change the letter "a" in the fifth column to the Greek letter alpha; (9) In Table 3.3.4 under SA193 Grade B7 (2.5 to 4 inch diameter), correct the coefficients of thermal expansion. (10) In Table 3.3.4 under SA193 Grade B7 (less than 2.5 inch diameter), correct the values of Sy, Su, and thermal expansion coefficients.
5014-53	521	The following text is added to pages 3.AB-2, 3.AB-8, 3.AC-10, 3.AD-12, and 3.AJ-11 of the HI-STORM FSAR): "the mechanical properties of SA193 Grade B7 for 2.5" to 4" diameters are conservatively used for the HI-TRAC lid bolts."
5014-54	613	The operations chapter is clarified to remove unnecessary detail in the operating procedures without removing steps important to the safe operation of the cask. The deletions involve detailed instructions to perform a task a certain way, or use a certain piece of ancillary equipment that is not required for safe cask system operation. This allows plants to perform these activities in way that suit their needs without compromising safety or requiring numerous site-specific changes to FSAR Chapter 8.

MAJOR CHANGES IMPLEMENTED UNDER 10 CFR 72.48
HI-STORM FSAR, REVISION 1

Table 6
Changes to the FSAR not Associated with Hardware Changes

5014-58	463	The following changes are made to the HI-STORM FSAR: (1) Correct the calculation of Pconfine in section 3.D.8. The correct result is 0.25 x 95.79 psi = 23.95 psi. The hoop stress and safety factor calculations, which depend on the value of Pconfine, are also be corrected. Update results summary table on page 3.4-9. (2) Modify section 3.M.3.9 of the to remove the analysis of the hoop stresses in the pedestal shell. Specifically, (a) rename the section to "pedestal shield", (b) delete mention of the pedestal shell in the last sentence of the first paragraph, (c) delete the definition of SFpedestal shell, (d) delete the calculation of SFpshell, (e) update results summary table on page 3.4-39, and (f) in the fourth row of Table 3.4.9 change the item name from "pedestal shell compression" to "pedestal shield compression" and update the safety factor accordingly. (3) Change the value of Pshield in section 3.M.3.10.3 from 7.98 psi to 23.95 psi. (4) Update the results for the inlet vent plate bending stress in the results summary table on page 3.4-39 and Table 3.4.9.
5014-59	484	The following changes are made to the HI-STORM FSAR: (1) On page 3.D-12, increase the pedestal shield weight from 5,339 lb to 5,518 lb in the formula for "w". Update the values for "SF" (p. 3.D-12), "Pconfine", "hoop stress", and "SF" (p. 3.D-13) accordingly. Also update the results summary table on page 3.4-9. (2) On page 3.K-2, increase the concrete weight density from 150 lb/ft^3 to 155 lb/ft^3. Also update the results summary table on page 3.4-38 and Table 3.4.9. (3) On page 3.M-2, increase the weight of the shield material from 3213 lb to 3321 lb. (4) On page 3.M-15, update the value for "SFshield" to be consistent with the latest results from Appendix 3.D. Also update the results summary table on page 3.4-39, Table 3.4.5, and Table 3.4.9. (5) On page 3.X.8, increase the weight of the lid components from 12,226 lb to 12,336 lb. (6) On page 3.4-39, update the results, in accordance with appendix 3.M, for the following items: "inner shell - membrane stress intensity", "inlet vent vertical plate membrane stress intensity", "weld - outer shell-to-baseplate", and " weld - inner shell-to-baseplate".
5014-61	624	Change the assumption and associated calculation for the rigging angle when lifting the HI-STORM overpack lid. Rigging angle is changed from 80 degrees to 65 degrees.

MAJOR CHANGES IMPLEMENTED UNDER 10 CFR 72.48
HI-STORM FSAR, REVISION 1

Table 6
Changes to the FSAR not Associated with Hardware Changes

5015-64	604	Modify the HI-STORM FSAR as follows: (1) Modify the method used to calculate the effective thermal conductivity of the MPC fuel basket composite wall from an analytic electric network analogy approach to a finite-element approach. (2) Replace the assumption that the fuel basket axial effective thermal conductivity is equal to the fuel basket radial effective thermal conductivity with the use of calculated axial effective thermal conductivity values. (3) Add a new calculation to determine a conservative equivalent isotropic fuel basket conductivity from the component (i.e., radial and axial) values and use the resulting value in subsequent thermal analyses. (4) Replace MPC net free volume calculation results with new results that reflect a change to a more precise input of MPC geometric data to the calculations.
5014-66	609	Modify Sections 4.5.1.1.4.1 and 4.5.2.2 and Table 4.5.9 of the HI-STORM FSAR to correct the discussion on water condition in the annular space between the MPC and the HI-TRAC during vacuum drying.
5014-67	621	Modify the FSAR to clarify the reaction of Boral with water and add a requirement to monitor for combustible gases and recommended defense-in-depth actions for further reducing hydrogen buildup prior to and during MPC lid welding and cutting operations.
5014-68	622	Modify the FSAR as follows: (1) Correct the source term results for the WE 14x14 with stainless guide tubes in Table 5.2.27.

FINAL SAFETY ANALYSIS REPORT

for the

HOLTEC INTERNATIONAL

STORAGE, AND TRANSFER

OPERATION REINFORCED MODULE

CASK SYSTEM

(HI-STORM 100 CASK SYSTEM)

DOCKET 72-1014

VOLUME I OF II

HI-STORM 100 FSAR
TABLE OF CONTENTS

CHAPTER 1: GENERAL DESCRIPTION 1.0-1

1.0 GENERAL INFORMATION 1.0-1
1.0.1 Engineering Change Orders 1.0-3

1.1 INTRODUCTION 1.1-1

1.2 GENERAL DESCRIPTION OF HI-STORM 100 SYSTEM 1.2-1
1.2.1 System Characteristics 1.2-1
1.2.1.1 Multi-Purpose Canisters 1.2-3
1.2.1.2 Overpacks 1.2-6
1.2.1.2.1 HI-STORM 100 Overpack (Storage) 1.2-6
1.2.1.2.2 HI-TRAC (Transfer Cask) – Standard Design 1.2-10
1.2.1.2.3 HI-TRAC 125D Transfer Cask 1.2-11
1.2.1.3 Shielding Materials 1.2-11
1.2.1.3.1 Boral Neutron Absorber 1.2-12
1.2.1.3.2 Neutron Shielding 1.2-14
1.2.1.3.3 Gamma Shielding Material 1.2-15
1.2.1.4 Lifting Devices 1.2-16
1.2.1.5 Design Life 1.2-16
1.2.2 Operational Characteristics 1.2-17
1.2 2.1 Design Features 1.2-17
1.2.2.2 Sequence of Operations 1.2-18
1.2.2.3 Identification of Subjects for Safety and Reliability Analysis 1.2-23
1.2.2.3.1 Criticality Prevention 1.2-23
1.2.2.3.2 Chemical Safety 1.2-23
1.2.2.3.3 Operation Shutdown Modes 1.2-23
1.2.2.3.4 Instrumentation 1.2-24
1.2.2.3.5 Maintenance Technique 1.2-24
1.2.3 Cask Contents 1.2-24

1.3 IDENTIFICATION OF AGENTS AND CONTRACTORS 1.3-1

1.4 GENERIC CASK ARRAYS 1.4-1

1.5 GENERAL ARRANGEMENT DRAWINGS 1.5-1

1.6 REFERENCES 1.6-1

APPENDIX 1.A: ALLOY X DESCRIPTION
APPENDIX 1.B. HOLTITE™ MATERIAL DATA
APPENDIX 1.C: MISCELLANEOUS MATERIAL DATA
APPENDIX 1 D. REQUIREMENTS ON HI-STORM 100 SHIELDING CONCRETE

CHAPTER 2: PRINCIPAL DESIGN CRITERIA 2.0-1

2.0 PRINCIPAL DESIGN CRITERIA 2.0-1
2.0.1 MPC Design Criteria 2.0-1
2.0.2 HI-STORM 100 Overpack Design Criteria 2.0-5
2.0.3 HI-TRAC Transfer Cask Design Criteria 2.0-8

2.0.4 Principal Design Criteria for the ISFSI Pad 2.0-10
2.0.4.1 Design and Construction Criteria 2.0-10
2.0.4.2 Applicable Codes 2.0-12
2.0.4.3 Limiting Design Parameters 2.0-14
2.0.4 4 Anchored Cask/ISFSI Interface 2.0-15

2.1 SPENT FUEL TO BE STORED 2.1-1
2.1.1 Determination of The Design Basis Fuel 2.1-1
2.1.2 Intact SNF Specifications 2.1-2
2.1.3 Damaged SNF and Fuel Debris Specifications 2.1-2
2.1.4 Deleted 2.1-3
2.1.5 Structural Parameters for Design Basis SNF 2.1-3
2.1.6 Thermal Parameters for Design Basis SNF 2.1-4
2.1.7 Radiological Parameters for Design Basis SNF 2.1-5
2.1.8 Criticality Parameters for Design Basis SNF 2.1-5
2.1.9 Summary of SNF Design Criteria 2.1-5

2.2 HI-STORM 100 DESIGN CRITERIA 2.2-1
2.2.1 Normal Condition Design Criteria 2.2-1
2.2.1.1 Dead Weight 2.2-1
2.2.1 2 Handling 2.2-2
2.2.1.3 Pressure 2.2-2
2.2.1.4 Environmental Temperatures 2.2-3
2.2.1.5 Design Temperatures 2.2-4
2.2.1.6 Snow and Ice 2.2-4
2.2.2 Off-Normal Conditions Design Criteria 2.2-4
2.2.2.1 Pressure 2.2-5
2.2.2.2 Environmental Temperatures 2.2-5
2.2.2.3 Design Temperatures 2.2-5
2.2.2.4 Leakage of One Seal 2.2-6
2.2.2.5 Partial Blockage of Air Inlets 2.2-6
2.2.2.6 Off-Normal HI-TRAC Handling 2.2-6
2.2.3 Environmental Phenomena and Accident Condition Design Criteria 2.2-7
2.2.3.1 Handling Accident 2.2-7
2 2.3.2 Tip-Over 2.2-8
2.2.3.3 Fire 2.2-9
2.2.3.4 Partial Blockage of MPC Basket Vent Holes 2.2-10
2.2.3.5 Tornado 2.2-10
2.2.3.6 Flood 2.2-11
2.2.3.7 Seismic Design Loadings 2.2-12
2.2.3.8 100% Fuel Rod Rupture 2.2-12
2.2.3.9 Confinement Boundary Leakage 2.2-12
2.2.3.10 Explosion 2.2-12
2.2.3.11 Lightning 2.2-13
2.2.3.12 Burial Under Debris 2.2-13
2 2.3.13 100% Blockage of Air Inlets 2.2-13
2 2.3.14 Extreme Environmental Temperature 2.2-13
2.2.3.15 Bounding Hydraulic, Wind, and Missile Loads for Anchored HI-STORMA 2.2-13
2.2.4 Applicability of Governing Documents 2.2-14

2.2.5 Service Limits 2.2-15
2.2.6 Loads 2.2-16
2.2.7 Load Combinations 2.2-16
2.2.8 Allowable Stresses 2.2-17

2.3 SAFETY PROTECTION SYSTEMS 2.3-1
2.3.1 General 2.3-1
2.3.2 Protection by Multiple Confinement Barriers and Systems 2.3-2
2.3.2.1 Confinement Barriers and Systems 2.3-2
2.3.2.2 Cask Cooling 2.3-2
2.3.3 Protection by Equipment and Instrumentation Selection 2.3-3
2.3.3.1 Equipment 2.3-3
2.3.3.2 Instrumentation 2.3-16
2.3.4 Nuclear Criticality Safety 2.3-16
2.3.4.1 Control Methods for Prevention of Criticality 2.3-17
2.3.4.2 Error Contingency Criteria 2.3-17
2.3.4.3 Verification Analyses 2.3-17
2.3.5 Radiological Protection 2.3-17
2.3.5.1 Access Control 2.3-17
2.3.5.2 Shielding 2.3-18
2.3.5.3 Radiological Alarm System 2.3-19
2.3.6 Fire and Explosion Protection 2.3-19

2.4 DECOMMISSIONING CONSIDERATIONS 2.4-1

2.5 REGULATORY COMPLIANCE 2.5-1

2.6 REFERENCES 2.6-1

APPENDIX 2.A: GENERAL DESIGN AND CONSTRUCTION REQUIREMENTS FOR THE ISFSI PAD FOR HI-STORM 100A

APPENDIX 2.B: THE FORCED HELIUM DEHYDRATION (FHD) SYSTEM

CHAPTER 3: STRUCTURAL EVALUATION 3.0-1

3.1 STRUCTURAL DESIGN 3.1-1
3.1.1 Discussion 3.1-1
3.1.2 Design Criteria 3.1-5
3.1.2.1 Loads and Load Combinations 3.1-8
3.1.2.1.1 Individual Load Cases 3.1-8
3.1.2.1.2 Load Combinations 3.1-13
3.1.2.2 Allowables 3.1-17
3.1.2.3 Brittle Fracture 3.1-19
3.1.2.4 Fatigue 3.1-21
3.1.2.5 Buckling 3.1-21

3.2 WEIGHTS AND CENTERS OF GRAVITY 3.2-1

3.3 MECHANICAL PROPERTIES OF MATERIALS 3.3-1
3.3.1 Structural Materials 3.3-1
3.3.1.1 Alloy X 3.3-1
3.3.1.2 Carbon Steel, Low-Alloy and Nickel Alloy Steel 3.3-2
3.3.1.3 Bolting Materials 3.3-2
3.3.1.4 Weld Material 3.3-2
3.3.2 Nonstructural Materials 3.3-3
3.3.2.1 Solid Neutron Shield 3.3-3
3.3 2.2 Boral™ Neutron Absorber 3.3-3
3.3.2.3 Concrete 3.3-3
3.3.2.4 Lead 3.3-3
3.3.2.5 Aluminum Heat Conduction Elements 3.3-3

3.4 GENERAL STANDARDS FOR CASKS 3.4-1
3.4.1 Chemical and Galvanic Reactions 3.4-1
3.4.2 Positive Closure 3.4-2
3.4.3 Lifting Devices 3.4-2
3.4.3.1 125 Ton HI-TRAC Lifting Analysis - Trunnions 3.4-4
3.4.3.2 125 Ton HI-TRAC Lifting - Trunnion Lifting Block Welds, Bearing, and Thread Shear Stress (Region A) 3.4-5
3.4.3.3 125 Ton HI-TRAC Lifting - Structure near Trunnion (Region B/Region A) 3.4-6
3.4.3.4 100 Ton HI-TRAC Lifting Analysis 3.4-6
3.4.3.5 HI-STORM 100 Lifting Analyses 3.4-7
3.4.3.6 MPC Lifting Analysis 3.4-11
3.4.3.7 Miscellaneous Lid Lifting Analyses 3.4-11
3.4.3.8 HI-TRAC Pool Lid Analysis - Lifting MPC From the Spent Fuel Pool (Load Case 01 in Table 3.1.5) 3.4-12
3.4.3.9 HI-TRAC Transfer Lid Analysis – Lifting MPC Away From Spent Fuel Pool (Load Case 01 in Table 3.1.5) 3.4-14
3.4.3.10 HI-TRAC Bottom Flange Evaluation during Lift (Load Case 01 in Table 3.1.5) 3.4-15
3.4.3.11 Conclusion 3.4-16
3.4.4 Heat 3.4-16
3.4.4.1 Summary of Pressures and Temperatures 3.4-16
3.4.4.2 Differential Thermal Expansion 3.4-16
3.4.4.2.1 Normal Hot Environment 3.4-16
3.4.4.2.2 Fire Accident 3.4-18
3.4.4.3 Stress Calculations 3.4-20
3.4.4.3.1 MPC Stress Calculations 3.4-21
3.4.4.3.2 HI-STORM 100 Storage Overpack Stress Calculations 3.4-34
3.4.4.3.3 HI-TRAC Transfer Cask Stress Calculations 3.4-42
3.4.4.4 Comparison with Allowable Stresses 3.4-51
3.4.4.4.1 MPC 3.4-51
3.4.4.4.2 Storage Overpack and HI-TRAC 3.4-53
3.4.4.5 Elastic Stability Considerations 3.4-53
3.4.4 5.1 MPC Elastic Stability 3.4-53
3.4.4.5.2 HI-STORM 100 Overpack Elastic Stability 3.4-53
3.4.5 Cold 3.4-54

3.4.6 HI-STORM 100 Kinematic Stability Under Flood Condition (Load Case A in Table 3.1.1) 3.4-56
3.4.7 Seismic Event and Explosion - HI-STORM 100 ..... 3.4-59
3.4.7.1 Seismic Event (Load Case C in Table 3.1.1) 3.4-59
3.4.7.2 Explosion (Load Case 05 in Table 3.1.5) 3.4-68
3.4.7.3 Anchored HI-STORM Systems Under High-Seismic DBE (Load Case C in Table 3.1.1) 3.4-71
3.4.8 Tornado Wind and Missile Impact (Load Case B in Table 3.1.1 and Load Case 04 in Table 3.1.5) 3.4-80
3.4.8.1 HI-STORM 100 Storage Overpack 3.4-81
3.4.8.2 HI-TRAC Transfer Cask 3.4-85
3.4.8.2.1 Intermediate Missile Strike 3.4-85
3.4.8.2.2 Large Missile Strike 3.4-88
3.4.9 HI-TRAC Drop Events (Load Case 02.b in Table 3.1.5) 3.4-89
3.4.9.1 Working Model 2D Analysis of Drop Event 3.4-90
3.4.9.2 DYNA3D Analysis of Drop Event 3.4-91
3.4.9.3 Horizontal Drop of HI-TRAC 125D 3.4-94
3.4.10 HI-STORM 100 Non-Mechanistic Tip-Over and Vertical Drop Event (Load Cases 02.a and 0.2c in Table 3.1.5) 3.4-95
3.4.11 Storage Overpack and HI-TRAC Transfer Cask Service Life 3.4-98
3.4.11.1 Storage Overpack 3.4-99
3.4.11.2 Transfer Cask 3.4-100
3.4.12 MPC Service Life 3.4-101
3.4.13 Design and Service Life 3.4-103

3.5 FUEL RODS 3.5-1

3.6 SUPPLEMENTAL DATA 3.6-1
3.6.1 Additional Codes and Standards Referenced in HI-STORM 100 System Design and Fabrication 3.6-1
3.6.2 Computer Programs 3.6-7
3.6.3 Appendices Included in Chapter 3 ..... 3.6-8
3.6.4 Calculation Package 3.6-9

3.7 COMPLIANCE WITH NUREG-1536 ..... 3.7-1

3.8 REFERENCES 3.8-1

APPENDIX 3.A HI-STORM DECELERATION UNDER POSTULATED VERTICAL DROP EVENT AND TIPOVER
APPENDIX 3.B HI-STORM 100 OVERPACK DEFORMATION IN NON-MECHANISTIC TIPOVER EVENT
APPENDIX 3.C RESPONSE OF CASK TO TORNADO WIND LOAD AND LARGE MISSILE IMPACT
APPENDIX 3.D VERTICAL HANDLING OF OVERPACK WITH HEAVIESTMPC
APPENDIX 3.E LIFTING TRUNNION STRESS ANALYSIS FOR HI-TRAC
APPENDIX 3.F LEAD SLUMP ANALYSIS (HI-TRAC SIDE DROP)
APPENDIX 3.G MISSILE PENETRATION ANALYSIS FOR HI-STORM 100
APPENDIX 3.H MISSILE PENETRATION ANALYSES FOR HI-TRAC

APPENDIX 3.I	HI-TRAC FREE THERMAL EXPANSIONS
APPENDIX 3.J	DELETED
APPENDIX 3.K	HI-STORM TIPOVER – LID ANALYSIS
APPENDIX 3.L	HI-STORM LID TOP PLATE BOLTING
APPENDI X 3.M	VERTICAL DROP OF OVERPACK
APPENDIX 3.N	DELETED
APPENDIX 3.O	DELETED
APPENDIX 3.P	DELETED
APPENDIX 3.Q	DELETED
APPENDIX 3.R	DELETED
APPENDIX 3.S	DELETED
APPENDIX 3.T	DELETED
APPENDIX 3.U	HI-STORM 100 COMPONENT THERMAL EXPANSIONS – MPC-24
APPENDIX 3.V	HI-STORM 100 COMPONENT THERMAL EXPANSIONS – MPC-32
APPENDIX 3.W	HI-STORM 100 COMPONENT THERMAL EXPANSIONS – MPC-68
APPENDIX 3.X	CALCULATION OF DYNAMIC LOAD FACTORS
APPENDIX 3.Y	MISCELLANEOUS CALCULATIONS
APPENDIX 3.Z	HI-TRAC HORIZONTAL DROP ANALYSIS
APPENDIX 3.AA	HI-TRAC 125 – ROTATION TRUNNION WELD ANALYSIS
APPENDIX 3.AB	HI-TRAC POOL LID STRESSES AND CLOSURE ANALYSIS
APPENDIX 3.AC	LIFTING CALCULATIONS
APPENDIX 3.AD	125 TON HI-TRAC TRANSFER LID STRESS ANALYSES
APPENDIX 3.AE	GLOBAL ANALYSIS OF HI-TRAC LIFT
APPENDIX 3.AF	MPC TRANSFER FROM HI-TRAC TO HI-STORM 100 UNDER COLD CONDITIONS OF STORAGE
APPENDIX 3.AG	STRESS ANALYSIS OF THE HI-TRAC WATER JACKET
APPENDIX 3.AH	HI-TRAC TOP LID SEPARATION ANALYSES
APPENDIX 3.AI	HI-TRAC 100 ROTATION TRUNNION WELD ANALYSIS
APPENDIX 3.AJ	100 TON HI-TRAC TRANSFER LID STRESS ANALYSES
APPENDIX 3.AK	CODE CASE N-284 STABILITY CALCULATIONS
APPENDIX 3.AL	HI-TRAC LUMPED PARAMETERS FOR SIDE DROP ANALYSIS
APPENDIX 3.AM	HI-TRAC 100 TRANSFER CASK CIRCUMFERENTIAL DEFORMATION AND STRESS
APPENDIX 3.AN	DYNA3D ANALYSES OF HI-TRAC SIDE DROPS AND IMPACT BY A LARGE TORNADO MISSILE
APPENDIX 3.AO	NOT USED
APPENDIX 3.AP	NOT USED
APPENDIX 3.AQ	HI-STORM 100 COMPONENT THERMAL EXPANSIONS; MPC-24E
APPENDIX 3.AR	ANALYSIS OF TRANSNUCLEAR DAMAGED FUEL CANISTER AND THORIA ROD CANISTER
APPENDIX 3.AS	ANALYSIS OF GENERIC PWR AND BWR DAMAGED FUEL CONTAINERS

CHAPTER 4: THERMAL EVALUATION 4.0-1

4.1 DISCUSSION 4.1-3

4.2 SUMMARY OF THERMAL PROPERTIES OF MATERIALS 4.2-1

4.3 SPECIFICATIONS FOR COMPONENTS 4.3-1
4.3.1 Evaluation of Moderate Burnup Zircaloy Clad Fuel 4.3-1
4.3.1.1 Cladding Temperature Limits (DCCG Criteria) 4.3-2
4.3.1.2 Permissible Cladding Temperatures (PNL Method) 4.3-6
4.3.2 Evaluation of Stainless Steel Clad Fuel 4.3-7
4.3.3 Short-Term Cladding Temperature Limit 4.3-8

4.4 THERMAL EVALUATION FOR NORMAL CONDITIONS OF STORAGE 4.4-1
4.4.1 Thermal Model 4.4-1
4.4.1.1 Analytical Model - General Remarks 4.4-2
4.4.1.1.1 Overview of the Thermal Model 4.4-3
4.4 1.1.2 Fuel Region Effective Thermal Conductivity Calculation 4 4-5
4.4.1.1.3 Effective Thermal Conductivity of Boral/ Sheathing/Box Wall Sandwich 4.4-8
4.4.1.1.4 Modeling of Basket Conductive Heat Transport 4.4-9
4.4.1.1.5 Heat Transfer in MPC Basket Peripheral Region 4.4-12
4.4.1.1.6 Effective Thermal Conductivity of Flexible MPC Basket-to-Shell Aluminum Heat Conduction Elements 4.4-13
4.4.1.1.7 Annulus Air Flow and Heat Exchange 4.4-15
4.4.1.1.8 Determination of Solar Heat Input 4.4-17
4.4.1.1.9 FLUENT Model for HI-STORM 4.4-18
4.4.1.1.10 Effect of Fuel Cladding Crud Resistance 4.4-22
4.4.1.1.11 Thermal Conductivity Calculations with Diluted Backfill Helium 4.4-23
4.4.1.1.12 Effects of Hypothetical Low Fuel road Emissivity 4.4-24
4.4.1.1.13 HI-STORM Temperature Field with Low Heat Emitting Fuel. 4.4-25
4.4.1.2 Test Model 4.4-26
4.4.2 Maximum Temperatures 4.4-26
4.4.3 Minimum Temperatures 4.4-29
4.4.4 Maximum Internal Pressure 4.4-29
4.4.5 Maximum Thermal Stresses 4.4-30
4.4.6 Evaluation of System Performance for Normal Conditions of Storage 4.4-31

4.5 THERMAL EVALUATION FOR NORMAL HANDLING AND ONSITE TRANSPORT 4.5-1
4.5.1 Thermal Model 4.5-1
4.5.1.1 Analytical Model 4.5-2
4.5.1.1.1 Effective Thermal Conductivity of Water Jacket 4.5-3
4.5.1.1.2 Heat Rejection from Overpack Exterior Surfaces 4.5-3
4.5.1.1.3 Determination of Solar Heat Input 4.5-4
4.5.1.1.4 MPC Temperatures During Moisture Removal Operations 4.5-4
4.5.1.1.5 Maximum Time Limit During Wet Transfer Operations 4.5-6
4.5.1.1.6 Cask Cooldown and Reflood Analysis During Fuel Unloading Operation 4.5-8
4.5.1.1.7 Study of Lead-to-Steel Gaps on Predicted Temperatures. . . . 4.5-10

4.5.1.2 Test Model 4.5-12
4.5 2 Maximum Temperatures 4.5-13
4.5.2.1 Maximum Temperatures Under Onsite Transport Conditions 4.5-13
4.5.2.2 Maximum MPC Basket Temperature Under Vacuum Conditions 4.5-14
4.5.3 Minimum Temperatures 4.5-15
4.5.4 Maximum Internal Pressure 4.5-15
4.5.5 Maximum Thermal Stresses 4.5-15
4.5.6 Evaluation of System Performance for Normal Conditions of Handling and Onsite Transport 4.5-15

4.6 REGULATORY COMPLIANCE 4.6-1
4.6.1 Normal Conditions of Storage 4.6-1
4.6.2 Normal Handling and Onsite Transfer 4.6-2

4.7 REFERENCES 4.7-1

APPENDIX 4.A CLAD TEMPERATURE LIMITS FOR HIGH-BURNUP FUEL
APPENDIX 4.B CONSERVATISMS IN THE THERMAL ANALYSIS OF THE HI-STORM 100 SYSTEM

CHAPTER 5: SHIELDING EVALUATION 5.0-1

5.0 INTRODUCTION 5.0-1

5.1 DISCUSSION AND RESULTS 5.1-1
5.1.1 Normal and Off-Normal Operations 5.1-4
5.1.2 Accident Conditions 5.1-8

5.2 SOURCE SPECIFICATION 5.2-1
5.2.1 Gamma Source 5.2-2
5.2.2 Neutron Source 5.2-4
5.2.3 Stainless Steel Clad Fuel Source 5.2-5
5.2.4 Non-fuel Hardware 5.2-6
5.2.4.1 BPRAs and TPDs 5.2-6
5.2.4.2 CRAs and APSRs 5.2-7
5.2.5 Choice of Design Basis Assembly 5.2-9
5.2.5.1 PWR Design Basis Assembly 5.2-10
5.2.5.2 BWR Design Basis Assembly 5.2-12
5.2.5.3 Decay Heat Loads 5.2-12
5.2.6 Thoria Rod Canister 5.2-13
5.2.7 Fuel Assembly Neutron Sources 5.2-13
5.2.8 Stainless Steel Channels 5.2-13

5.3 MODEL SPECIFICATIONS 5.3-1
5.3.1 Description of the Radial and Axial Shielding Configuration 5.3-1
5.3.1.1 Fuel Configuration 5.3-6
5.3.1.2 Streaming Considerations 5.3-6
5.3.2 Regional Densities 5.3-7

5.4 SHIELDING EVALUATION 5.4-1
5.4.1 Streaming Through Radial Steel Fins and Pocket Trunnions and Azimuthal Variations 5.4-4
5.4.2 Damaged Fuel Post-Accident Shielding Evaluation 5.4-6
5.4.2.1 Dresden 1 and Humboldt Bay Damaged Fuel 5.4-6
5.4.2.2 Generic PWR and BWR Damaged Fuel 5 4-6
5.4.3 Site Boundary Evaluation 5.4-8
5.4.4 Stainless Steel Clad Fuel Evaluation 5.4-10
5.4.5 Mixed Oxide Fuel Evaluation 5.4-10
5.4.6 Non-Fuel Hardware 5.4-11
5.4.7 Dresden Unit 1 Antimony-Beryllium Neutron Sources 5.4-11
5.4.8 Thoria Rod Canister 5.4-13
5.4.9 Regionalized Dose Rate Evaluation 5.4-13

5.5 REGULATORY COMPLIANCE 5.5-1

5.6 REFERENCES 5.6-1

APPENDIX 5.A SAMPLE INPUT FILE FOR SAS2H
APPENDIX 5.B SAMPLE INPUT FILE FOR ORIGEN-S
APPENDIX 5.C SAMPLE INPUT FILE FOR MCNP
APPENDIX 5.D DOSE RATE COMPARISON FOR DIFFERENT COBALT IMPURITY LEVELS
APPENDIX 5.E DOSE RATES FOR A HI-STORM 100 OVERPACK WITH AND WITHOUT AN INNER SHIELD SHELL

CHAPTER 6: CRITICALITY EVALUATION 6.1-1

6.1 DISCUSSION AND RESULTS 6.1-2

6.2 SPENT FUEL LOADING 6.2-1
6.2.1 Definition of Assembly Classes 6.2-1
6.2.2 Intact PWR Fuel Assemblies 6.2-2
6.2.2.1 Intact PWR Fuel Assemblies in the MPC-24 without Soluble Boron 6.2-2
6.2.2.2 Intact PWR Assemblies in the MPC-24 with Soluble Boron 6.2-3
6.2.2.3 Intact PWR Assemblies in the MPC-24E and MPC-24EF with and without Soluble Boron 6.2-3
6.2.2.4 Intact PWR Assemblies in the MPC-32 ..... 6.2-4
6.2.3 Intact BWR Fuel Assemblies in the MPC-68 and MPC-68FF 6.2-4
6.2.4 BWR and PWR Damaged Fuel Assemblies and Fuel Debris 6.2-6
6.2.4.1 Damaged BWR Fuel Assemblies and BWR Fuel Debris in Assembly Classes 6x6A, 6x6B, 6x6C, 7x7A and 8x8A 6.2-6
6.2.4.2 Damaged BWR Fuel Assemblies and Fuel Debris in the MPC-68 and MPC-68FF 6.2-7
6.2.4.3 Damaged PWR Fuel Assemblies and Fuel Debris in the MPC-24E and MPC-24EF 6.2-8
6.2.5 Thoria Rod Canister 6.2-8

6.3 MODEL SPECIFICATION 6.3-1

6.3.1 Description of Calculational Model 6.3-1
6.3.2 Cask Regional Densities 6.3-3

6.4 CRITICALITY CALCULATIONS 6.4-1
6.4.1 Calculational or Experimental Method 6.4-1
6.4.1.1 Basic Criticality Safety Calculations 6.4-1
6.4.2 Fuel Loading or Other Contents Loading Optimization 6.4-2
6.4.2.1 Internal and External Moderation 6.4-2
6.4.2.1.1 Unborated Water 6.4-2
6.4.2.1.2 Borated Water 6.4-3
6.4.2.2 Partial Flooding 6.4-4
6.4.2.3 Clad Gap Flooding 6.4-4
6.4.2.4 Preferential Flooding 6.4-4
6.4.2.5 Design Basis Accidents 6.4-5
6.4.3 Criticality Results 6.4-6
6.4.4 Damaged Fuel and Fuel Debris 6.4-7
6.4.4.1 MPC-68, MPC-68f or MPC-68FF loaded with Assembly Classes 6x6A, 6x6B, 6x6C, 7x7A and 8x8A 6.4-7
6.4.4 2 Generic BWR and PWR Damaged Fuel and Fuel Debris 6.4-8
6.4.4.2.1 Bounding Intact Assemblies 6.4-10
6.4.4.2.2 Bare Fuel Road Arrays 6.4-10
6.4.4.2.3 Distributed Enrichment in BWR Fuel 6.4-12
6.4.4.2.4 Results for MPC-68 and MPC-68FF 6.4-12
6.4.4.2.5 Results for MPC-24E and MPC-24EF 6.4-13
6.4.5 Fuel Assemblies with Missing Rods 6.4-13
6.4.6 Thoria Rod Canister 6.4-13
6.4.7 Sealed Rods replacing BWR Water Rods 6.4-14
6.4.8 Non-Fuel Hardware in PWR Fuel Assemblies 6.4-14
6.4.9 Neutron Sources in Fuel Assemblies 6.4-15
6.4.10 Applicability of HI-STAR Analyses to HI-STORM 100 System 6.4-15

6.5 CRITICALITY BENCHMARK EXPERIMENTS 6 5-1

6.6 REGULATORY COMPLIANCE 6.6-1

6.7 REFERENCES 6.7-1

APPENDIX 6.A BENCHMARK CALCULATIONS
APPENDIX 6.B DISTRIBUTED ENRICHMENTS IN BWR FUEL
APPENDIX 6.C CALCULATIONAL SUMMARY
APPENDIX 6 D SAMPLE INPUT FILES

CHAPTER 7: CONFINEMENT 7.0-1

7.0 INTRODUCTION 7.0-1

7.1 CONFINEMENT BOUNDARY 7.1-1
7.1.1 Confinement Vessel 7.1-1
7.1.2 Confinement Penetrations 7.1-2

7.1.3 Seals and Welds 7.1-3
7.1.4 Closure 7.1-3
7.1.5 Damaged Fuel Container 7.1-4

7.2 REQUIREMENTS FOR NORMAL AND OFF-NORMAL CONDITIONS OF STORAGE 7.2-1
7.2.1 Release of Radioactive Material 7.2-1
7.2.2 Pressurization of the Confinement Vessel 7.2-1
7.2.3 Confinement Integrity During Dry Storage 7.2-2
7.2.4 Control of Radioactive Material During Fuel Loading Operations 7.2-3
7.2.5 External Contamination Control 7.2-3
7.2.6 Confinement Vessel Releasable Source Term 7.2-3
7.2.7 Release of Contents Under Normal Storage Conditions 7.2-4
7.2.7.1 Confinement Boundary Leakage Rate 7.2-4
7.2.7.2 Percentage of Nuclides that Remain Airborne 7.2-4
7.2.7.3 Fraction of Volume Released 7.2-4
7.2.7.4 Release Fraction 7.2-5
7.2.7.5 Radionuclide Release Rate 7.2-5
7.2.7.6 Atmospheric Dispersion Factor 7.2-5
7.2.7.7 Dose Conversion Factors 7.2-5
7.2.7.8 Occupancy Time 7.2-5
7.2.7.9 Breathing Rate 7.2-5
7.2.8 Postulated Doses Under Normal and Off-Normal Conditions of Storage 7.2-5
7.2.8.1 Whole Body Dose 7.2-6
7.2.8.2 Critical Organ Dose 7.2-6
7.2.8.3 Site Boundary 7.2-6
7.2.9 Assumptions 7.2-7

7.3 CONFINEMENT REQUIREMENTS FOR HYPOTHETICAL ACCIDENT CONDITIONS 7.3-1
7.3.1 Confinement Vessel Releasable Source Term 7.3-1
7.3.2 Crud Radionuclides 7.3-2
7.3.3 Release of Contents Under Non-Mechanistic Accident Conditions of Storage 7.3-3
7.3.3.1 Confinement Boundary Leakage Rate 7.3-3
7.3.3.2 Percentage of Nuclides that Remain Airborne 7.3-5
7.3.3.3 Fraction of Volume Released 7.3-5
7.3.3.4 Release Fraction 7.3-5
7.3.3.5 Radionuclide Release Rate 7.3-5
7.3.3.6 Atmospheric Dispersion Factor 7.3-5
7.3.3.7 Dose Conversion Factors 7.3-7
7.3.3.8 Occupancy Time 7.3-7
7.3.3.9 Breathing Rate 7.3-7
7.3.4 Postulated Accident Doses 7.3-7
7.3.4.1 Whole Body Dose (Total Effective Dose Equivalent) 7.3-7
7.3.4.2 Critical Organ Dose 7.3-8
7.3.5 Site Boundary 7.3-8
7.3.6 Assumptions 7.3-9

7.4 REFERENCES 7.4-1

APPENDIX 7.A EXAMPLE DOSE CALCULATIONS FOR NORMAL, OFF-NORMAL, AND ACCIDENT CONDITIONS OF STORAGE

CHAPTER 8: OPERATING PROCEDURES 8.0-1

8.0 INTRODUCTION 8.0-1

8.1 PROCEDURE FOR LOADING THE HI-STORM 100 SYSTEM IN THE SPENT FUEL POOL 8.1-1
- 8.1.1 Overview of Loading Operations 8.1-1
- 8.1.2 HI-TRAC and HI-STORM Receiving and Handling Operations 8.1-4
- 8.1.3 HI-TRAC and MPC Receipt Inspection and Loading Preparation 8.1-7
- 8.1.4 MPC Fuel Loading 8.1-11
- 8.1.5 MPC Closure 8.1-11
- 8.1.6 Preparation for Storage 8.1-22
- 8.1.7 Placement of HI-STORM into Storage 8.1-24

8.2 ISFSI OPERATIONS 8.2-1

8.3 PROCEDURE FOR UNLOADING THE HI-STORM 100 SYSTEM IN THE SPENT FUEL POOL 8.3-1
- 8.3.1 Overview of HI-STORM 100 System Unloading Operations 8.3-1
- 8.3.2 HI-STORM Recovery From Storage 8.3-2
- 8.3.3 Preparation for Unloading 8.3-4
- 8.3 4 MPC Unloading 8.3-9
- 8.3.5 Post-Unloading Operations 8.3-9

8.4 MPC TRANSFER TO HI-STAR 100 OVERPACK FOR TRANSPORT OR STORAGE 8.4-1
- 8.4.1 Overview of Operations 8.4-1
- 8.4.2 Recovery from Storage 8.4-1
- 8.4.3 MPC Transfer into the HI-STAR 100 Overpack 8.4-1

8.5 MPC TRANSFER TO HI-STORM DIRECTLY FROM TRANSPORT 8.5-1
- 8.5.1 Overview of Operations 8.5-1
- 8.5.2 HI-STAR Receipt and Preparation for MPC Transfer 8.5-2
- 8.5.3 Perform MPC Transfer into HI-STORM 100 ..... 8.5-3

8.6 REFERENCES 8.6-1

CHAPTER 9: ACCEPTANCE CRITERIA AND MAINTENANCE PROGRAM 9.0-1

9.0 INTRODUCTION 9.0-1

9.1 ACCEPTANCE CRITERIA 9.1-1
- 9.1.1 Fabrication and Nondestructive Examination (NDE) 9.1-1
  - 9.1.1.1 MPC Lid-to-Shell Weld Volumetric Inspection 9.1-4
- 9.1.2 Structural and Pressure Tests 9.1-5

9.1.2.1 Lifting Trunnions 9.1-5
9.1.2.2 Hydrostatic Testing 9.1-6
9.1.2.2.1 HI-TRAC Transfer Cask Water Jacket 9.1-6
9.1.2.2.2 MPC Confinement Boundary 9.1-7
9.1.2.3 Materials Testing 9.1-8
9.1.3 Leakage Testing 9.1-8
9.1.4 Component Tests 9.1-9
9.1.4.1 Valves, Rupture Discs, and Fluid Transport Devices 9.1-9
9.1.4.2 Seals and Gaskets 9.1-9

9.1.5 Shielding Integrity 9.1-9
9.1.5.1 Fabrication Testing and Control 9.1-10
9.1.5.2 Shielding Effectiveness Tests 9.1-11
9.1.5.3 Neutron Absorber Tests 9.1-12
9.1.6 Thermal Acceptance Tests 9.1-13
9.1.7 Cask Identification 9.1-13

9.2 MAINTENANCE PROGRAM 9.2-1
9.2.1 Structural and Pressure Parts 9.2-1
9.2.2 Leakage Tests 9.2-1
9.2.3 Subsystem Maintenance 9.2-2
9.2.4 Pressure Relief Valve 9.2-2
9.2.5 Shielding 9.2-2
9.2.6 Thermal 9.2-3

9.3 REGULATORY COMPLIANCE 9.3-1

9.4 REFERENCES 9.4-1

CHAPTER 10: RADIATION PROTECTION 10.1-1

10.1 ENSURING THAT OCCUPATIONAL RADIATION EXPOSURES ARE AS-LOW-AS-REASONABLY-ACHIEVABLE (ALARA) 10.1-1
10.1.1 Policy Considerations 10.1-1
10.1.2 Design Considerations 10.1-2
10.1.3 Operational Considerations 10.1-4
10.1.4 Auxiliary/Temporary Shielding 10.1-5

10.2 RADIATION PROTECTION DESIGN FEATURES 10.2-1

10.3 ESTIMATED ON-SITE COLLECTIVE DOSE ASSESSMENT 10.3-1
10.3.1 Estimated Exposures for Loading and Unloading Operations 10.3-2
10.3.2 Estimated Exposures for Surveillance and Maintenance 10.3-3

10.4 ESTIMATED COLLECTIVE DOSE ASSESSMENT 10.4-1
10.4.1 Controlled Area Boundary Dose for Normal Operations 10.4-1
10.4.2 Controlled Area Boundary Dose for Off-Normal Conditions 10.4-2
10.4.3 Controlled Area Boundary Dose for Accident Conditions 10.4.2

10.5 REFERENCES 10.5-1

CHAPTER 11: ACCIDENT ANALYSIS 11.1-1

11.1 OFF-NORMAL CONDITIONS 11.1-1
11.1.1 Off-Normal Pressures 11.1-2
11.1.1.1 Postulated Cause of Off-Normal Pressure 11.1-2
11.1.1.2 Detection of Off-Normal Pressure 11.1-2
11.1.1.3 Analysis of Effects and Consequences of Off-Normal Pressure 11.1-2
11.1.1 4 Corrective Action for Off-Normal Pressure 11.1-4
11.1.1.5 Radiological Impact of Off-Normal Pressure 11.1-4
11.1.2 Off-Normal Environmental Temperatures 11.1-4
11.1.2.1 Postulated Cause of Off-Normal Environmental Temperatures 11.1-4
11.1.2.2 Detection of Off-Normal Environmental Temperatures 11.1-4
11.1.2.3 Analysis of Effects and Consequences of Off-Normal Environmental Temperatures 11.1-5
11.1.2.4 Corrective Action for Off-Normal Environmental Temperatures 11.1-6
11.1.2.5 Radiological Impact of Off-Normal Environmental Temperatures 11.1-6
11.1.3 Leakage of One Seal 11.1-7
11.1.3.1 Postulated Cause of Leakage of One Seal in the Confinement Boundary 11.1-7
11.1.3.2 Detection of Leakage of One Seal in the Confinement Boundary 11.1-8
11.1.3.3 Analysis of Effects and Consequences of Leakage of One Seal in the Confinement Boundary 11.1-8
11.1.3.4 Corrective Action for Leakage of One Seal in the Confinement Boundary 11.1-9
11.1.3.5 Radiological Impact of Leakage of One Seal in the Confinement Boundary 11.1-9
11.1.4 Partial Blockage of Air Inlets 11.1-9
11.1.4.1 Postulated Cause of Partial Blockage of Air Inlets 11.1-9
11.1.4.2 Detection of Partial Blockage of Air Inlets 11.1-10
11.1.4.3 Analysis of Effects and Consequences of Partial Blockage of Air Inlets 11.1-10
11.1.4.4 Corrective Action for Partial Blockage of Air Inlets 11.1-12
11.1.4.5 Radiological Impact of Partial Blockage of Air Inlets 11.1-12
11.1.5 Off-Normal Handling of HI-TRAC 11.1-12
11.1.5.1 Postulated Cause of Off-Normal Handling of HI-TRAC 11.1-13
11.1.5.2 Detection of Off-Normal Handling of HI-TRAC 11.1-13
11.1.5.3 Analysis of Effects and Consequences of Off-Normal Handling of HI-TRAC 11.1-13
11.1.5.4 Corrective Action for Off-Normal Handling of HI-TRAC 11.1-14
11.1.5.5 Radiological Consequences of Off-Normal Handling of HI-TRAC 11.1-14
11.1 6 Off-Normal Load Combinations 11.1-14

11.2 ACCIDENTS 11.2-1
11.2.1 HI-TRAC Transfer Cask Handling Accident 11.2-1
11.2.1.1 Cause of HI-TRAC Transfer Cask Handling Accident 11.2-1
11.2.1.2 HI-TRAC Transfer Cask Handling Accident Analysis 11.2-1
11.2.1.3 HI-TRAC Transfer Cask Handling Accident Dose Calculations 11.2-3
11.2.1.4 HI-TRAC Transfer Cask Handling Accident Corrective Action 11.2-4
11.2.2 HI-STORM Overpack Handling Accident 11.2-4
11.2.2.1 Cause of HI-STORM Overpack Handling Accident 11.2-4
11.2.2.2 HI-STORM Overpack Handling Accident Analysis 11.2-5
11.2.2.3 HI-STORM Overpack Handling Accident Dose Calculations 11.2-6
11.2.2.4 HI-STORM Overpack Handling Accident Corrective Action 11.2-6
11.2.3 Tip-Over 11.2-6
11.2.3.1 Cause of Tip-Over 11.2-6
11.2.3.2 Tip-Over Analysis 11.2-6
11.2.3.3 Tip-Over Dose Calculations 11.2-8
11.2.3.4 Tip-Over Accident Corrective Action 11.2-8
11.2.4 Fire Accident 11.2-8
11.2.4.1 Cause of Fire 11.2-8
11.2.4.2 Fire Analysis 11.2-9
11.2.4.2.1 Fire Analysis for HI-STORM Overpack 11.2-9
11.2 4.2.2 Fire Analysis for HI-TRAC Transfer Cask 11.2-15
11.2.4.3 Fire Dose Calculations 11.2-16
11.2.4.4 Fire Accident Corrective Actions 11.2-17
11.2.5 Partial Blockage of MPC Basket Vent Holes 11.2-17
11.2.5.1 Cause of Partial Blockage of MPC Basket Vent Holes 11.2-18
11.2.5.2 Partial Blockage of MPC Basket Vent Hole Analysis 11.2-18
11.2.5.3 Partial Blockage of MPC Basket Vent Holes Dose Calculations 11.2-19
11.2.5.4 Partial Blockage of MPC Basket Vent Holes Corrective Action 11.2-19
11.2.6 Tornado 11.2-20
11.2.6.1 Cause of Tornado 11.2-20
11.2.6.2 Tornado Analysis 11.2-20
11.2.6.3 Tornado Dose Calculations 11.2-21
11.2.6.4 Tornado Accident Corrective Action 11.2-21
11.2.7 Flood 11.2-22
11.2.7.1 Cause of Flood 11.2-22
11.2.7.2 Flood Analysis 11.2-22
11.2.7.3 Flood Dose Calculations 11.2-23
11.2.7.4 Flood Accident Corrective Action 11.2-23
11.2.8 Earthquake 11.2-24
11.2.8 1 Cause of Earthquake 11.2-24
11.2.8 2 Earthquake Analysis 11.2-24
11.2.8.3 Earthquake Dose Calculations 11.2-25
11.2.8.4 Earthquake Accident Corrective Action 11.2-25

11.2.9 100% Fuel Rod Rupture 11.2-25
11.2.9.1 Cause of 100% Fuel Rod Rupture 11 2-25
11.2.9.2 100% Fuel Rod Rupture Analysis 11.2-25
11.2.9.3 100% Fuel Rod Rupture Dose Calculations 11.2-26
11.2.9.4 100% Fuel Rod Rupture Accident Corrective Action 11.2-27
11 2.10 Confinement Boundary Leakage 11.2-27
11.2.10.1 Cause of Confinement Boundary Leakage 11.2-27
11.2.10.2 Confinement Boundary Leakage Analysis 11.2-27
11.2.10.3 Confinement Boundary Leakage Dose Calculations 11.2-28
11.2.10.4 Confinement Boundary Leakage Accident Corrective Action 11.2-29
11.2.11 Explosion 11.2-29
11.2.11.1 Cause of Explosion 11.2-29
11.2.11.2 Explosion Analysis 11.2-29
11.2.11.3 Explosion Dose Calculations 11.2-30
11.2.11.4 Explosion Accident Corrective Action 11.2-30
11.2.12 Lightning 11.2-30
11.2.12.1 Cause of Lightning 11.2-30
11.2.12.2 Lightning Analysis 11.2-31
11.2.12.3 Lightning Dose Calculations 11.2-32
11.2.12.4 Lightning Accident Corrective Action 11.2-32
11.2.13 100% Blockage of Air Inlets 11.2-32
11.2.13.1 Cause of 100% Blockage of Air Inlets 11.2-32
11.2.13.2 100% Blockage of Air Inlets Analysis 11.2-32
11.2.13.3 100% Blockage of Air Inlets Dose Calculations 11.2-35
11.2.13.4 100% Blockage of Air Inlets Accident Corrective Action 11.2-36
11.2.14 Burial Under Debris 11.2-36
11.2.14.1 Cause of Burial Under Debris 11.2-36
11.2.14.2 Burial Under Debris Analysis 11.2-37
11.2.14.3 Burial Under Debris Dose Calculations 11.2-39
11.2.14.4 Burial Under Debris Accident Corrective Action 11.2-39
11.2.15 Extreme Environmental Temperature 11.2-39
11.2.15.1 Cause of Extreme Environmental Temperature 11.2-39
11.2.15.2 Extreme Environmental Temperature Analysis 11.2-39
11.2.15.3 Extreme Environmental Temperature Dose Calculations 11.2-41
11.2.15.4 Extreme Environmental Temperature Corrective Action 11.2-41

11.3 REFERENCES 11.3-1

CHAPTER 12: OPERATING CONTROLS AND LIMITS 12.0-1

12.0 INTRODUCTION 12.0-1

12.1 PROPOSED OPERATING CONTROLS AND LIMITS 12.1-1
12.1.1 NUREG-1536 (Standard Review Plan) Acceptance Criteria 12.1-1

12.2 DEVELOPMENT OF OPERATING CONTROLS AND LIMITS 12.2-1
12 2.1 Training Modules 12 2-1
12.2.2 Dry Run Training 12.2-2

12.2.3 Functional and Operating Limits, Monitoring Instruments, and Limiting Control Settings 12.2-3
12.2.4 Limiting Conditions for Operation 12.2-3
12.2.5 Equipment 12.2-3
12.2.6 Surveillance Requirements 12.2-4
12.2.7 Design Features 12.2-4
12.2.8 MPC 12.2-4
12.2.9 HI-STORM 100 Overpack 12.2-4

12.3 TECHNICAL SPECIFICATIONS 12.3-1

12.4 REGULATORY EVALUATION 12.4-1

12.5 REFERENCES 12.5-1

APPENDIX 12.A TECHNICAL SPECIFICATION BASES FOR THE HOLTEC HI-STORM 100 SPENT FUEL STORAGE CASK SYSTEM
APPENDIX 12.B COMMENT RESOLUTION LETTERS

CHAPTER 13: QUALITY ASSURANCE 13.0-1

13.0 INTRODUCTION 13.0-1

13.1 GRADED APPROACH TO QUALITY ASSURANCE 13.1-1

13.2 PROJECT ORGANIZATION 13.2-1

13.3 QUALITY ASSURANCE PROGRAM 13.3-1
13.3.1 Overview 13.3-1
13.3.2 Quality Assurance Program Documents 13.3-1
13.3.1 Quality Assurance Program Content 13.3-1

13.4 PROJECT PLAN (Section Deleted) 13.4-1

13.5 REGULATORY COMPLIANCE 13.5-1

13.6 REFERENCES 13.6-1

APPENDIX 13.A DESIGN VERIFICATION CHECKLIST (Intentionally Deleted)
APPENDIX 13.B HOLTEC QA PROCEDURES (Intentionally Deleted)

LIST OF FIGURES

1.1.1	HI-STORM 100 Overpack with MPC Partially Inserted
1.1.1A	HI-STORM 100S Overpack with MPC Partially Inserted
1.1.2	Cross Section Elevation View of MPC
1.1.3	HI-STORM 100 Overpack Cross Sectional Elevation View
1.1.3A	HI-STORM 100S Overpack Cross Sectional Elevation View
1.1.4	A Pictorial View of the HI-STORM 100A Overpack (100SA Model Shown)
1.1.5	Anchoring Detail for the HI-STORM 100A and 100SA Overpacks
1.2.1	Cross Section View of the HI-STORM 100 System
1.2.1A	Cross Section View of the HI-STORM 100S System
1.2.2	MPC-68 Cross Section View
1.2.3	MPC-32 Cross-Section
1.2.4	MPC-24/24E/24EF Cross Section View
1.2.5	Cross Section Elevation View of MPC
1.2.6	MPC Confinement Boundary
1.2.7	Cross Section of HI-STORM Overpack
1.2.8	HI-STORM 100 Overpack Cross Sectional Elevation View
1.2.8A	HI-STORM 100S Overpack Cross Sectional Elevation View
1.2.9	125-Ton HI-TRAC Transfer Cask with Pool Lid Cross Sectional Elevation View
1.2.9A	HI-TRAC 125D Transfer Cask Cross Sectional Elevation View
1.2.10	125-Ton HI-TRAC Transfer Cask with Transfer Lid Cross Sectional Elevation View
1.2.11	100-Ton HI-TRAC Transfer Cask with Pool Lid Cross Sectional Elevation View
1.2.12	100-Ton HI-TRAC Transfer Cask with Transfer Lid Cross Sectional Elevation View
1.2.13	DELETED
1.2.14	DELETED

1.2.15	DELETED
1.2.16a	Major HI-STORM 100 Loading Operations (Sheet 1 of 6)
1.2.16b	Major HI-STORM 100 Loading Operations (Sheet 2 of 6)
1.2.16c	Major HI-STORM 100 Loading Operations (Sheet 3 of 6)
1.2.16d	Major HI-STORM 100 Loading Operations (Sheet 4 of 6)
1.2.16e	Example of HI-STORM 100 Handling Options (Sheet 5 of 6)
1.2.16f	Example of HI-TRAC Handling Options (Sheet 6 of 6)
1.2.17a	Major HI-STORM 100 Unloading Operations (Sheet 1 of 4)
1.2.17b	Major HI-STORM 100 Unloading Operations (Sheet 2 of 4)
1.2.17c	Major HI-STORM 100 Unloading Operations (Sheet 3 of 4)
1.2.17d	Major HI-STORM 100 Unloading Operations (Sheet 4 of 4)
1.2.18	HI-STORM Mating Device
1.4.1	Cask Layout Pitch Requirements Based on 2 by N Array(s)
1.4.2	Cask Layout Pitch Requirements Based on a Square Array
1.A.1	Design Stress Intensity vs. Temperature
1.A.2	Tensile Strength vs. Temperature
1.A.3	Yield Stress vs Temperature
1.A.4	Coefficient of Thermal Expansion vs. Temperature
1.A.5	Thermal Conductivity vs. Temperature
2.1.1	Damaged Fuel Container for Dresden Unit-1/Humboldt Bay SNF
2.1.2	TN Damaged Fuel Canister for Dresden Unit 1
2.1.2A	TN Thoria Rod Canister for Dresden Unit 1
2.1.2B	Holtec Damaged Fuel Container for PWR SNF in MPC-24E/24EF
2.1.2C	Holtec Damaged Fuel Container for BWR SNF in MPC-68/68FF
2.1.3	PWR Axial Burnup Profile with Normalized Distribution

2.1.4 BWR Axial Burnup Profile with Normalized Distribution

2.1.5 MPC With Upper and Lower Fuel Spacers

2.1.6 DELETED

2.1.7 DELETED

2.1.8 DELETED

2.3.1 HI-STAR Upending and Downending on a Rail Car

2.3.2 HI-TRAC Upending and Downending on a Heavy-Haul Transport Trailer

2.3.3 HI-TRAC Placement on HI-STORM 100 for MPC Transfer Operations

2.3.4 HI-TRAC Placement on HI-STAR 100 for MPC Transfer Operations

2.A.1 Typical HI-STORM/ISFSI Pad Fastening Detail

2.B.1 Schematic of the Forced Helium Dehydration System

3.1.1 MPC-68 and MPC-32 Fuel Basket Geometry

3.1.2 0° Drop Orientations for the MPCs

3.1.3 45° Drop Orientations for the MPCs

3.4.1 Finite Element Model of MPC-24 (0 Degree Drop Model)

3.4.2 Finite Element Model of MPC-32 (0 Degree Drop Model)

3.4.3 Finite Element Model of MPC-68 (0 Degree Drop Model)

3.4.4 Finite Element Model of MPC-24 (45 Degree Drop Model)

3.4.5 Finite Element Model of MPC-32 (45 Degree Drop Model)

3.4.6 Finite Element Model of MPC-68 (45 Degree Drop Model)

3.4.7 Detail of Fuel Assembly Pressure Load on MPC Basket

3.4.8 0 Degree Side Drop of MPC

3.4.9 45 Degree Side Drop of MPC

3.4.10 Comparison of 125 Ton and 100 Ton HI-TRAC Lifting Trunnion Connection

3.4.11 Confinement Boundary Model Showing Temperature Data Points

3.4.12 MPC-Confinement Boundary Finite Element Grid (Exploded View)

3.4.13 Von Mises Stress - Outer Shell

3.4.14 Plastic Strain Outer Shell

3.4.15 Von Mises Stress - Inner Shell

3.4.16 Plastic Strain - Inner Shell

3.4.16a Von Mises Stress - Channel

3.4.16b Plastic Strain - Channel

3.4.17 Top and Bottom Lifting of the Loaded HI-STORM 100

3.4.18 HI-TRAC Upending in the Upending Frame

3.4.19 HI-STORM 100 Tip-Over Event

3.4.20 HI-STORM 100 End Drop Event

3.4.21 HI-TRAC Lifting with the Pool and Transfer Lids

3.4.22 HI-TRAC Side Drop Event

3.4.23 Forces and Moments on 125 Ton Rotation Trunnion Weld

3.4.24 Working Model Solution for Impact Force on HI-TRAC 100 Transfer Cask Outer Shell

3.4.25 HI-STORM 100 Overturning Scenario - Initial Angular Velocity = 0.628 Radians/Second Assumed Caused By a Pressure Pulse

3.4.26 HI-STORM 100 Overturning Scenario - Initial Angular Velocity = 0.628 Radians/Second Maximum Angular Excursion

3.4.27 HI-TRAC Transfer Cask in Short-Side Impact (Cask Rests at a Position of -5° from Horizontal)

3.4.28 HI-TRAC Transfer Cask in Long-Side Impact (Cask Rests at a Position of -1° from Horizontal)

3.4.29 Free-Body of Transfer Lid During Primary Impact with Target

3.4.30 Seismic Spectra Sets Used for Time History Analysis of HI-STORM 100 on ISFSI Pad

3.4.31 RG 1.60 "H1"

3.4.32 RG 1.60 "H2"

3.4.33 RG 1.60 "VT"

3.4.34 Horizontal Acceleration Time History "FN"

3.4.35 Horizontal Acceleration Time History "FP"

3.4.36 Horizontal Acceleration Time History "FV"

3 4.37 Geometry for Quasi-Static Analysis

3.4.38 Free Body for Quasi-Static Analysis

3.4.39 Sector Lug Finite Element Mesh

3.4.40 Sector Lug Stress - Case 1 Preload

3.4.41 Sector Lug Stress Intensity - Case 2 Preload + Seismic

3.4.42 Exploded View Showing Ground Plane, Overpack, MPC, and Overpack Top Lid

3.4.43 View of Assembled HI-STORM on Pad-MPC Inside and Top Lid Attached

3.4.44 Variation of Foundation Resistance Force vs. Time for Reg. Guide 1 60 Seismic Input

3.4.45 Variation of Representative Stud Tensile Force vs. Time for Reg. Guide 1.60 Seismic Input

3.4.46 MPC/HI-STORM 100A Impulse vs. Time - Reg. Guide 1.60 Event

3.4.47 Instantaneous Calculated Coefficient of Friction - Reg. Guide 1.60 Event

3.4.48 HI-TRAC 125 Benchmark Simulation of Drop Scenario A

3.4.49 Simulation of HI-TRAC 125D 42" Horizontal Drop with Primary Impact at Top End Radial Support Tab

3.5.1 Fuel Rod Deformation Phases, $g_1 > 0$

3.5.2 Fuel Rod Deformation Phases, $g_1 = 0$

3.5.3 Fuel Rod Deformation Phases, $g_1 = 0$, $F_2 > F_1$

3.5.4 Inter-Grid Strap Deformation $F_3 > F_2$

3.5.5 Point Contact at Load F_4 Maximum Bending Moment at A

3.5 6 Extended Region of Contact $F_5 > F_4$, Zero Bending Moment at A

3.5.7 Free Body Diagram When Moment at A' = 0
$P_{AX} = F_5/COS(\theta)$. Resisting Moment M_R at Grid Strap Not Shown

3.5.8 View C - C

3.5.9 Exaggerated Detail Showing Multiple Fuel Rods Subject to Lateral Deflection with Final Stacking of Rod Column

3.A.1 Tipover Finite Element Model (3-D View)

3.A.2 Tipover Finite-Element Model (Plan)

3.A.3 Tipover Finite-Element Model (XZ View)

3.A.4 Tipover Finite-Element Model (YZ View)

3.A.5 End-Drop Finite-Element Model (3-D View)

3.A.6 End-Drop Finite-Element Model (Plan)

3.A.7 End-Drop Finite-Element Model (XZ View)

3.A.8 End-Drop Finite-Element Model (YZ View)

3.A.9 Soil Finite-Element Model (3-D View)

3.A.10 Concrete Pad Finite-Element Model (3-D View)

3.A.11 Overpack Steel Structure Finite-Element Model (3-D View)

3.A.12 Inner Shell and Channels Finite-Element Model (3-D View)

3.A.13 Lid Steel Finite-Element Model (3-D View)

3.A.14 Overpack Concrete Components Finite-Element Model (3-D View)

3.A.15 MPC Finite Element Model (3-D View)

3.A.16 Pivot Point During Tip-Over Condition

3.A.17 Tip-Over Event Overpack Slams Against the Foundation Developing a Resistive Force

3.A.18 Measurement Points and Corresponding Finite-Element Model Nodes

3.A.19 Deleted

3.A.20 Deleted

3.A.21 Deleted

3.A.22 Deleted

3 A.23 Deleted

3.A.24	Deleted
3.A.25	Deleted
3.A.26	Deleted
3.A.27	Deleted
3.A.28	Deleted
3 A.29	Deleted
3.A.30	Deleted
3.C.1	Free Body Diagram of Cask for Large Missile Strike/Tornado Event
3.C.2	Centroid Motion - Impact/Wind
3.C.3	Centroid Motion - Impact/Dip
3.D.1	Bottom End Lift at the Inlet Vents
3 D 2a	Top End Lift Finite Element Model
3.D.2b	Top End Lift Finite Element Model
3.D.2c	Top End Lift Finite Element Model
3.D.3	Bottom End Lift at the Inlet Vents - Stress Intensity Profile (psi)
3.D.4a	Top End Lift at the Lifting Lugs - Stress Intensity (psi)
3.D.4b	Top End Lift at the Lifting Lugs - Stress Intensity (psi)
3.D.4c	Top End Lift at the Lifting Lugs - Stress Intensity (psi)
3.D.5a	Top End Lift - Baseplate Stress Intensity (psi)
3.D.5b	Top End Lift - Baseplate Stress Intensity (psi)
3.D.5c	Top End Lift - Baseplate Stress Intensity (psi)
3.E.1	Sketch of Lifting Trunnion Geometry Showing Applied Load
3.E.2	Free Body Sketch of Lifting Trunnion Threaded Region Showing Moment Balance by Shear Stresses
3.E.3	Weld Configuration in Lifting Trunnion Block
3.F.1	Lead Slump Finite Element Model

3.F.2 Lead Slump Analysis (Phase I) Lead Contraction

3.F.3 Lead Slump Analysis (Phase II)

3.F.4 Lead Slump Analysis (Phase II) Stress Intensity

3.G.1 Small Missile Impact

3.G.2 Post Impact Deformation of HI-STORM 100 Outer Shell Backed by Concrete and Impacted by a Horizontal Missile Strike

3.G.3 Missile Impact on Top Lid

3.G.4 Missile Strike at Top of HI-STORM

3.G.5 Top Lid Missile Impact

3.H.1 HI-TRAC Missile Strike Locations

3.I.1 Geometry of Section for Thermal Expansion Calculations

3.M.1 Geometry of Lid Shield

3.U.1 Geometry of Section for Thermal Expansion Calculations

3.V.1 Geometry of Section for Thermal Expansion Calculations

3.W.1 Geometry of Section for Thermal Expansion Calculations

3.X.1 Triangular Deceleration Pulse Shape

3.X.2 Dynamic Load Factor for Single Degree of Freedom System - Triangular Pulse Shape, No Damping

3.X.3 Dynamic Model for Multi-Degree of Freedom Analysis for DLF Determination

3.X.4 Dynamic Force in Lower Panel Spring - PWR

3.X.5 Dynamic Force in Lower Panel Spring - BWR

3.Y.1 Freebody of Stress Distribution in the Weld and the Honeycomb Panel

3.Y.2 Freebody of Idealized Fuel Basket Support

3.Z 1 HI-TRAC 125 Results

3.Z.2 HI-TRAC 100 Results

3.Z.3 HI-TRAC 125 Mass Properties

3.Z.4	HI-TRAC 100 Mass Properties
3.Z.5	HI-TRAC Lower Impact Spring
3.Z.6	HI-TRAC Upper Spring
3.AA.1	Forces and Moments on 125 Ton Rotation Trunnion Weld
3.AA.2	125-Ton HI-TRAC - Pocket Trunnion Model
3.AA.3	125-Ton HI-TRAC - Pocket Trunnion Model (Outer Shell)
3.AA.4	125-Ton HI-TRAC - Pocket Trunnion Model (Outer Shell)
3.AA.5	125-Ton HI-TRAC - Pocket Trunnion Model (Inner Shell)
3.AA.6	125-Ton HI-TRAC - Pocket Trunnion Model (Inner Shell)
3.AA.7	125-Ton HI-TRAC - Pocket Trunnion Model (Radial Channels)
3.AA.8	125-Ton HI-TRAC - Pocket Trunnion Model (Radial Channels)
3.AD.1	Door Plate Simply Supported Beam Model
3.AD 2	Minimum Section of Bottom Plate for Stress Analysis
3.AD 3	Housing Bolt Array to Support Lift Operation
3.AE.1	Global Analysis of HI-TRAC Lift
3.AE.1a	Deleted
3.AE.1b	Deleted
3.AE.1c	Deleted
3.AE.2	Global Analysis of HI-TRAC Lift
3.AE.3	Free-Body of HI-TRAC 125 Bottom Flange Showing Load from Lid Bolts "T" and Equilibrium Loads "T1" and "T2" in the Inner and Outer Shells
3.AE.4	Deleted
3.AI.1	100-Ton HI-TRAC - Pocket Trunnion Model (Outer Shell)
3.AI 2	100-Ton HI-TRAC - Pocket Trunnion Model (Outer Shell)
3.AI.3	100-Ton HI-TRAC - Pocket Trunnion Model (Inner Shell)

3.AI.4 100-Ton HI-TRAC - Pocket Trunnion Model (Inner Shell)

3.AI.5 100-Ton HI-TRAC - Pocket Trunnion Model (Radial Channels)

3.AI.6 100-Ton HI-TRAC - Pocket Trunnion Model (Radial Channels)

3.AJ.1 Door Plate Simply Supported Beam Model

3.AJ.2 Section of Bottom Plate for Stress Analysis

3.AJ.3 Housing Bolt Array to Support Lift Operation

3.AN.1 HI-TRAC Transfer Cask in Short-Side Impact (Cask Rests at a Position of -5° from Horizontal)

3.AN.2 HI-TRAC Transfer Cask in Long-Side Impact (Cask Rests at a Position of -1° from Horizontal)

3.AN.3 125-Ton HI-TRAC, Scenario A

3.AN.4 HI-TRAC 125 Finite Element Mesh

3.AN.5 Vertical Displacement at Transfer Lid, Top Lid Outer Points, Scenario A

3 AN 6 Vertical Deceleration at Transfer Lid, Scenario A

3.AN.7 Vertical Deceleration at Inner Shell Centroid, Scenario A

3.AN.8 Vertical Deceleration of Top Lid, Scenario A

3.AN 9 Interface Forces at Target/Primary and Secondary Impact Sites

3.AN.10 Absolute Vertical Displacement at Centroid Location (Top and Bottom of Inner Shell)

3.AN.11 Overall Model of 125-Ton Drop, Scenario B

3.AN.12 Absolute Vertical Displacement at Transfer Lid and Top Lid

3.AN.13 Rigid Body Deceleration - Transfer Lid, Centroid, Top Lid, Scenario B

3.AN.14 Interface Force on Target, Scenario B

3.AN.15 Vertical Displacements at Top and Bottom of Inner Shell, Scenario B

3.AN.16 Force at MPC-Top Lid Interface, Scenario B

3.AN.17 Rigid Body Decelerations - Transfer Lid, Centroid, Top Lid, Scenario A

3.AN.18 Interface Force at Target (Lower Trunnion, Water Jacket, Upper Trunnion)

3.AN.19 Upper and Lower Vertical Displacements at Centroid

3.AN.20 Vertical Displacement at Transfer Lid and Top Lid, Scenario B

3.AN.21 Rigid Body Decelerations, Scenario B

3.AN.22 Force at Target Impact Sites, Scenario B

3.AN.23 Inner Shell Vertical Displacements - Upper and Lower Points at Centroid

3.AN 24 Interface Force - MPC/Top Lid Impact Site, Scenario B

3.AN.25 Geometry of Inner Shell Deformation

3.AN.26 Large Tornado Missile Impact - Total Force Applied to Transfer Cask

3.AN.27 Von Mises Stress in Water Jacket - Large Tornado Missile Impact on 125-Ton HI-TRAC

3.AN.28 Von Mises Stress in Water Jacket - Large Tornado Missile Impact on 100-Ton HI-TRAC

3.AN.29 Slap Down of HI-TRAC 100, Scenario B

3.AN.30 Local View at Secondary Impact Location

4.2.1 Thermal Conductivity of Helium and Air vs. Temperature

4.2.2 Viscosity of Helium and Air vs. Temperature

4.3.1 Comparison of Calculated (By EPRI and PNL) and Theoretical Maximum Fuel Rod Pressures for PWR Fuel

4.3.2 Comparison of Reg. Guide 3.54 Decay Heat Data With ORIGEN-S for BWR Fuel

4.3.3 Comparison of Reg. Guide 3.54 Decay Heat Data With ORIGEN-S for PWR Fuel

4.3.4 Comparison of Fuel Cladding Temperature Limits with HI-STORM Permissible Temperatures

4.4.1 Homogenization of the Storage Cell Cross-Section

4.4.2 MPC Cross-Section Replaced With an Equivalent Two Zone Axisymmetric Body

4.4.3 Westinghouse 17x17 OFA PWR Fuel Assembly Model

4.4.4 General Electric 9x9 BWR Fuel Assembly Model

4.4.5 Comparison of FLUENT Calculated Fuel Assembly Conductivity Results with Published Technical Data

4.4.6 Typical MPC Basket Parts in a Cross-Sectional View

4.4.7 Resistance Network Model of a "Box Wall-Boral-Sheathing" Sandwich

4.4.8	DELETED
4.4.9	MPC-24 Basket Cross-Section ANSYS Finite Element Model
4.4.10	MPC-68 Basket Cross-Section ANSYS Finite Element Model
4.4.11	Illustration of an MPC Basket to Shell Aluminum Heat Conduction Element
4.4.12	Stack Air Temperature as a Function of Height
4.4.13	Schematic Depiction of the HI-STORM Thermal Analysis
4.4.14	DELETED
4.4.15	DELETED
4.4.16	MPC-24 Peak Fuel Rod Axial Temperature Profile
4.4.17	MPC-68 Peak Fuel Rod Axial Temperature Profile
4.4.18	DELETED
4.4.19	MPC-24 Radial Temperature Profile (Hottest Basket Cross-Section)
4.4.20	MPC-68 Radial Temperature Profile (Hottest Basket Cross-Section)
4.4.21	DELETED
4.4.22	DELETED
4.4.23	DELETED
4.4.24	Illustration of Minimum Available Planar Area Per HI-STORM Module at an ISFSI
4.4.25	Fuel Basket Regionalized Loading Scenario
4.4.26	Bounding Overpack Annulus Axial Profiles
4.5.1	Water Jacket Resistance Network Analogy for Effective Conductivity Calculation
4.5.2	HI-TRAC Temperature Contours Plot
4.5.3	Deleted
4.A.1	Creep Tests of Lead Wire
4.A.2	Comparison of Holtec Model Creep to Irradiated Cladding Creep Data
4.A.3	Comparison of Holtec Model Creep to Kaspar et. Al. Irradiated Cladding Creep Data

4.A.4 Comparison of Holtec Model Creep to Goll et. Al. Irradiated Cladding Creep Data - Scatter Plot

4.A.5 Comparison of Holtec Creep Model to Kaspar et. Al. Creep Curve for KWO Irradiated Samples

4.A.6 PWR Fuel Decay Heat vs. Post Core Decay Time

4.A.7 BWR Fuel Decay Heat vs. Post Core Decay Time

4.A.8 Peak Clad Temperature Variation with MPC Heat Load for PWR Canisters

4.A.9 Rod Gas Temperature Variation with MPC Heat Load (Q) for PWR Canisters

4.A.10 Peak Clad Temperature Variation with PC Heat Load for BWR Canisters

4.A.11 Rod Gas Temperature Variation with MPC Heat Load (Q) for BWR Canisters

4.A.12 Oxide Corrosion Data

4.A.13 Oxide Corrosion Data

4.B.1 Cutaway View of a HI-STORM Overpack Standing on an ISFSI Pad

4 B.2 Depiction of the HI-STORM Ventilated Cask heat Dissipation Elements

4.B 3 Relative Significance of Heat Dissipation Elements in the HI-STORM 100

4.B.4 Air Access Restrictions in the HI-STORM Thermal Model

4.B.5 In-Plane Radiative Cooling of a HI-STORM Cask in an Array

4.B.6 In-Plane Radiative Blocking of a HI-STORM Cask by Hypothetical Reflecting Boundary

4.B.7 Radiative Heating of Reference HI-STORM Cask by Surrounding Casks

4.B.8 A Classical Thermal Scenario: Air Cooling of a Heated Square Block

5.1.1 Cross Section Elevation View of Overpack with Dose Point Location

5.1.2 Cross Section Elevation View of 125-Ton HI-TRAC Transfer Cask with Dose Point Locations

5.1.3 Annual Dose Versus Distance for Various Configurations of the MPC-24 for 52,500 MWD/MTU and 5-Year Cooling (8760 Hour Occupancy Assumed)

5.1.4 Cross Section Elevation View of 100-Ton HI-TRAC Transfer Cask (With Pool Lid) With Dose Point Locations

5.1.5 Dose Rate 1-Foot From the Side of the 100-Ton HI-TRAC Transfer Cask with the MPC-24 for 35,000 MWD/MTU and 5-Year Cooling

5.1.6 Dose Rate on the Surface of the Pool Lid on the 100-Ton HI-TRAC Transfer Cask with the

MPC-24 for 35,000 MWD/MTU and 5-Year Cooling

5.1.7 Dose Rate 1-Foot From the Bottom of the Transfer Lid on the 100-Ton HI-TRAC Transfer Cask with the MPC-24 for 35,000 MWD/MTU and 5-Year Cooling

5.1.8 Dose Rate 1-Foot From the Top of Top Lid on the 100-Ton HI-TRAC Transfer Cask with the MPC-24 for 35,000 MWD/MTU and 5-Year Cooling

5.1.9 Dose Rate 1-Foot From the Side of the 100-Ton HI-TRAC Transfer Cask With Temporary Shielding Installed, with the MPC-24 for 35,000 MWD/MTU and 5-Year Cooling (Total Dose Without Temporary Shielding Shown for Comparison)

5.1.10 Dose Rate At Various Distances From the Side of the 100-Ton HI-TRAC Transfer Cask with the MPC-24 for 35,000 MWD/MTU and 5-Year Cooling

5.1.11 Dose Rate At Various Distances From the Bottom of Transfer Lid on the 100-Ton HI-TRAC Transfer Cask with the MPC-24 for 35,000 MWD/MTU and 5-Year Cooling

5.1.12 Cross Section Elevation View of the HI-STORM 100S overpack with Dose Point Locations

5.3.1 HI-STORM 100 Overpack with MPC-32 Cross Sectional View as Modeled in MCNP

5.3.2 HI-STORM 100 Overpack with MPC-24 Cross Sectional View as Modeled in MCNP

5.3.3 HI-STORM 100 Overpack with MPC-68 Cross Sectional View as Modeled in MCNP

5.3.4 Cross Sectional View of an MPC-32 Basket Cell as Modeled in MCNP

5.3.5 Cross Sectional View of an MPC-24 Basket Cell as Modeled in MCNP

5.3.6 Cross Sectional View of an MPC-68 Basket Cell as Modeled in MCNP

5.3.7 HI-TRAC Overpack with MPC-24 Cross Sectional View as Modeled in MCNP

5.3.8 Axial Location of PWR Design Basis Fuel in the HI-STORM Overpack

5.3.9 Axial Location of BWR Design Basis Fuel in the HI-STORM Overpack

5.3.10 Cross Section of HI-STORM 100 Overpack

5.3.11 HI-STORM 100 Overpack Cross Sectional Elevation View

5.3.12 100-Ton HI-TRAC Transfer Cask with Pool Lid Cross Sectional Elevation View (As Modeled)

5.3.13 125-Ton HI-TRAC Transfer Cask with Pool Lid Cross Sectional Elevation View (As Modeled)

5.3.14 HI-TRAC 100 Transfer Cask Cross Sectional View (As Modeled)

5.3.15 HI-TRAC 125 Transfer Cask Cross Sectional View (As Modeled)

5.3.16 100-Ton HI-TRAC Transfer Lid (As Modeled)

5.3.17 125-Ton HI-TRAC Transfer Lid (As Modeled)

5.3.18 HI-STORM 100S Overpack Cross Sectional Elevation View

5.3.19 Gamma Shield Cross Plate Configuration of HI-STORM 100 and HI-STORM 100S

5.3.20 HI-TRAC 125D Transfer Cask Cross Sectional view (As Modeled)

5.3.21 Cross Sectional Views of the Current MPC-24 Design and the Superseded MPC-24 Which is Used in the MCNP Models

6.3.1 Typical Cell in the Calculation Model (Planar Cross-Section) with Representative Fuel in the MPC-24 Basket

6.3.1A Typical Cell in the Calculation Model (Planar Cross-Section) wth Representative Fuel in the MPC-24E Basket

6.3.2 Typical Cell in the Calculation Model (Planar Cross-Section) with Representative Fuel in the MPC-32 Basket

6.3.3 Typical Cell in the Calculation Model (Planar Cross-Section) with Representative Fuel in the MPC-68 Basket

6.3.4 Calculation Model (Planar Cross-Section) with Fuel Illustrated in One Quadrant of the MPC-24 and the MPC-24E

6.3.5 Calculation Model (Planar Cross-Section) with Fuel Illustrated in One Quadrant of the MPC-32

6.3.6 Calculation Model (Planar Cross-Section) with Fuel Illustrated in One Quadrant of the MPC-68

6.3.7 Sketch of the Calculational Model in the Axial Direction

6.4.1 DELETED

6.4.2 Failed Fuel Calculation Model (Planar Cross-Section) with 6x6 Array with 4 Missing Rods in the MPC-68 Basket

6.4.3 Failed Fuel Calculation Model (Planar Cross-Section) with 6x6 Array with 8 Missing Rods in the MPC-68 Basket

6.4.4 Failed Fuel Calculation Model (Planar Cross-Section) with 6x6 Array with 12 Missing Rods in the MPC-68 Basket

6.4.5 Failed Fuel Calculation Model (Planar Cross-Section) with 6x6 Array with 18 Missing Rods in the MPC-68 Basket

6.4.6 Failed Fuel Calculation Model (Planar Cross-Section) with 7x7 Array with 8 Missing Rods in the MPC-68 Basket

6.4.7 Failed Fuel Calculation Model (Planar Cross-Section) with 7x7 Array with 13 Missing Rods in the MPC-68 Basket

6.4.8 Failed Fuel Calculation Model (Planar Cross-Section) with 7x7 Array with 24 Missing Rods in the MPC-68 Basket

6.4.9 Failed Fuel Calculation Model (Planar Cross-Section) with Damaged Fuel Collapsed Into 8x8 Array in the MPC-68 Basket

6.4.10 Calculated K-Effective As A Function of Internal Moderator Density

6.4.11 Locations of the Damaged Fuel Container in the MPC-68 and MPC-68FF

6.4.12 Locations of the Damaged Fuel Containers in the MPC-24E

6.4.13 Maximum keff for the MPC-68 with Generic BWR Damaged Fuel Container, Initial Enrichment of 4.0 wt% for Damaged and 3.7 wt% for Intact Fuel

6.4.14 Maximum keff for the MPC-24E with Generic PWR Damaged Fuel Container, Initial Enrichment of 4.0 wt% for Damaged and Intact Fuel

6.4.15 Thoria Rod Canister (Planar Cross-Section) with 18 Thoria Rods in the MPC-68 Basket

6.A.1 MCNP4a Calculated k-eff Values for Various Values of the Spectral Index

6.A.2 KENO5a Calculated k-eff Values for Various Values of the Spectral Index

6.A.3 MCNP4a Calculated k-eff Values at Various U-235 Enrichments

6 A.4 KENO5a Calculated k-eff Values at Various U-235 Enrichments

6.A.5 Comparison of MCNP4a and KENO5a Calculations for Various Fuel Enrichments

6.A.6 Comparison of MCNP4a and KENO5a Calculations for Various Boron-10 Areal Densities

7.1.1 HI-STORM 100 System Confinement Boundary

8.1.1 Loading Operations Flow Diagram

8.1.2a Major HI-STORM 100 Loading Operations

8.1.2b Major HI-STORM 100 Loading Operations

8.1.2c Major HI-STORM 100 Loading Operations

8.1.2d Major HI-STORM 100 Loading Operations

8.1.2e	Example of HI-STORM 100 Handling Options
8.1.2.f	Example of HI-TRAC Handling Options (Missile Shields Not Shown for Clarity)
8.1.3	Lift Yoke Engagement and Vertical HI-TRAC Handling (Shown with the Pool Lid and the Transfer Lid)
8.1.4	HI-TRAC Upending/Downending in the Transfer Frame
8.1.5	HI-STORM Vertical Handling
8.1.6	MPC Upending in the MPC Upending Frame
8.1.7	MPC Rigging for Vertical Lifts
8.1.8	MPC Alignment in HI-TRAC
8.1.9	MPC Lid and HI-TRAC Accessory Rigging
8.1.10	Fuel Spacers
8.1.11	Drain Port Details
8.1.12	Drain Line Positioning
8.1.13	Annulus Shield/Annulus Seal
8.1.14	Annulus Overpressure System
8.1.15	HI-TRAC Lid Retention System in Exploded View
8.1.16	MPC Vent and Drain Port RVOA Connector
8.1.17	Drain Line Installation
8.1.18	Temporary Shield Ring
8.1.19	MPC Water Pump-Down for MPC Lid Welding Operations
8.1.20	MPC Air Displacement and Hydrostatic Testing
8.1.21	MPC Blowdown
8.1.22a	Vacuum Drying System
8.1.22b	Moisture Removal System
8.1.23	Helium Backfill System
8.1.24	MPC Lift Cleats

8.1.25 MPC Support Stays

8.1.26 HI-TRAC Bottom Lid Replacement

8.1.27 HI-STORM Lid Rigging

8.1.28 Sample MPC Transfer Options

8.1.29a Sample HI-STORM and HI-TRAC Transfer Options

8.1.29b Sample HI-STORM and HI-TRAC Transfer Options

8.1.30 Sample HI-STORM Vent Duct Shield Inserts

8.1.31 HI-TRAC Alignment Over HI-STORM

8.1.32 Examples of an MPC Downloader

8.1.33 Transfer Lid Trim Plates

8.1.34a HI-STORM Vent Screens and Gamma Shield Cross Plate Installation (Typ.)

8.1.34b HI-STORM Thermocouple Installation

8.1.35 HI-STORM Placement of the ISFSI Pad

8.1.36 HI-STORM Jacking

8.1.37 HI-TRAC Lid Bolt Torquing Pattern

8.3.1 Unloading Operations Flow Diagram

8.3.2a Major HI-STORM 100 Unloading Operations

8.3.2b Major HI-STORM 100 Unloading Operations

8.3.2c Major HI-STORM 100 Unloading Operations

8.3.2d Major HI-STORM 100 Unloading Operations

8.3.3 MPC Gas Sampling in Preparation for Unloading

8.3.4 MPC Cool-Down

8.4.1a HI-STAR and HI-TRAC Mating

8.4.1b HI-STAR and HI-TRAC 125D Mating

8.5.1 HI-STAR Annulus Gas Sampling

10.1.1 HI-STORM 100 System Auxiliary/Temporary Shielding

10.3.1a Operator Work Locations Used for Estimating Personnel Exposure

10.3.1b Operator Work Locations Used for Estimating Personnel Exposure

10.3.1c Operator Work Locations Used for Estimating Personnel Exposure

10.3.1d Operator Work Locations Used for Estimating Personnel Exposure

10.3.1e Operator Work Locations Used for Estimating Personnel Exposure

11.2.1 Fire Transient ANSYS Model Element Plot

11.2.2 Temperature Profiles Through Overpack Wall At 60, 120, and 217 Seconds

11.2.3 Temperature Profiles Through Overpack Wall At 217, 600, and 1200 Seconds

11.2.4 Temperature Profiles Through Overpack Wall At 20, 40, and 90 Minutes

11.2.5 Temperature vs. Time At Concrete Mid-Height

11.2.6 Maximum Allowable Burial Under Debris Time Versus Decay Heat Load

11.2.7 Temperature Rise versus Duct Blockage Time

11.2.8 DELETED

LIST OF EFFECTIVE PAGES FOR HI-STORM 100 FSAR REVISION 1

Page	Revision		Page	Revision
i	1		1.0-15	1
ii	1		1.0-16	1
iii	1		1.0-17	1
iv	1		1.0-18	1
v	1		1.0-19	1
vi	1		1.0-20	1
vii	1		1.0-21	1
viii	1		1.0-22	1
ix	1		1.0-23	1
x	1		1.0-24	1
xi	1		1.0-25	1
xii	1		1.0-26	1
xiii	1		1.0-27	1
xiv	1		1.0-28	1
xv	1		1.0-29	1
xvi	1		1.0-30	1
xvii	1		1.0-31	1
xviii	1		1.0-32	Deleted
xix	1		1.0-33	Deleted
xx	1		1.1-1	1
xxi	1		1.1-2	1
xxii	1		1.1-3	1
xxiii	1		1.1-4	1
xxiv	1		Fig. 1.1.1	0
xxv	1		Fig. 1.1.1A	1
xxvi	1		Fig. 1.1.2	0
xxvii	1		Fig. 1.1.3	1
xxviii	1		Fig. 1.1.3A	1
xxix	1		Fig. 1.1.4	1
xxx	1		Fig. 1.1.5	1
xxxi	1		1.2-1	1
xxxii	1		1.2-2	1
xxxiii	1		1.2-3	1
xxxiv	1		1.2-4	1
xxxv	1		1.2-5	1
xxxvi	1		1.2-6	1
			1.2-7	1
1.0-1	1		1.2-8	1
1.0-2	1		1.2-9	1
1.0-3	1		1.2-10	1
1.0-4	1		1.2-11	1
1.0-5	1		1.2-12	1
1.0-6	1		1.2-13	1
1.0-7	1		1.2-14	1
1.0-8	1		1.2-15	1
1.0-9	1		1.2-16	1
1.0-10	1		1.2-17	1
1.0-11	1		1.2-18	1
1.0-12	1		1.2-19	1
1.0-13	1		1.2-20	1
1.0-14	1		1.2-21	1

LIST OF EFFECTIVE PAGES FOR HI-STORM 100 FSAR REVISION 1

Page	Revision		Page	Revision
1.2-22	1		1.5-1	1
1.2-23	1		1.5-2	1
1.2-24	1		1.5-3	Deleted
1.2-25	1		Drawings	See Section 1.5
1.2-26	1		Bills-of-Material	See Section 1.5
1.2-27	1		1.6-1	1
1.2-28	1		1.6-2	1
1.2-29	1		1.A-1	1
1.2-30	1		1.A-2	1
1.2-31	1		1.A-3	1
1.2-32	1		1.A-4	1
1.2-33	1		1.A-5	1
Fig. 1.2.1	1		1.A-6	1
Fig. 1.2.1A	1		1.A-7	1
Fig. 1.2.2	1		Fig. 1.A.1	0
Fig. 1.2.3	1		Fig. 1.A.2	0
Fig. 1.2.4	1		Fig. 1.A-3	0
Fig. 1.2.5	0		Fig. 1.A.4	0
Fig. 1.2.6	0		Fig. 1.A.5	0
Fig. 1.2.7	1		1.B-1	1
Fig. 1.2.8	1		1.B-2	1
Fig. 1.2.8A	1		1.B-3	1
Fig. 1.2.9	1		1.B-4 - 1.B-20	Deleted
Fig. 1.2.10	0		1.C-1	1
Fig. 1.2.11	0		1.C-2	Deleted
Fig. 1.2.12	0		1.C-3	0
Fig. 1.2.13	Deleted		1.C-4	0
Fig. 1.2.14	Deleted		1.C-5	Deleted
Fig. 1.2.15	Deleted		1.C-6	Deleted
Fig. 1.2.16a	0		1.D-1	1
Fig. 1.2.16b	0		1.D-2	1
Fig. 1.2.16c	0		1.D-3	1
Fig. 1.2.16d	0		1.D-4	1
Fig. 1.2.16e	0		1.D-5	1
Fig. 1.2.16f	0			
Fig. 1.2.17a	0			
Fig. 1.2.17b	0			
Fig. 1.2.17c	0			
Fig. 1.2.17d	0			
Fig. 1.2.18	1			
1.3-1	0			
1.4-1	1			
1.4-2	1			
1.4-3	1			
Fig. 1.4.1	0			
Fig. 1.4.2	0			

LIST OF EFFECTIVE PAGES FOR HI-STORM 100 FSAR REVISION 1

Page	Revision		Page	Revision
2.0-1	1		2.1-15	1
2.0-2	1		2.1-16	1
2.0-3	1		2.1-17	1
2.0-4	1		2.1-18	1
2.0-5	1		2.1-19	1
2.0-6	1		2.1-20	1
2.0-7	1		2.1-21	1
2.0-8	1		2.1-22	1
2.0-9	1		2.1-23	1
2.0-10	1		2.1-24	1
2.0-11	1		2.1-25	1
2.0-12	1		2.1-26	1
2.0-13	1		2.1-27	1
2.0-14	1		2.1-28	1
2.0-15	1		2.1-29	Deleted
2.0-16	1		2.1-30	Deleted
2.0-17	1		Fig. 2.1.1	1
2.0-18	1		Fig. 2.1.2	1
2.0-19	1		Fig. 2.1.2A	1
2.0-20	1		Fig. 2.1.2B	1
2.0-21	1		Fig. 2.1.2C	1
2.0-22	1		Fig. 2.1.3	0
2.0-23	1		Fig. 2.1.4	0
2.0-24	1		Fig. 2.1.5	0
2.0-25	1		Fig. 2.1.6	Deleted
2.0-26	1		Fig. 2.1.7	Deleted
2.0-27	1		Fig. 2.1.8	Deleted
2.0-28	1		2.2-1	1
2.0-29	1		2.2-2	1
2.0-30	1		2.2-3	1
2.0-31	1		2.2-4	1
2.0-32	1		2.2-5	1
2.0-33	1		2.2-6	1
2.0-34	1		2.2-7	1
2.0-35	1		2.2-8	1
2.0-36	1		2.2-9	1
2.0-37	1		2.2-10	1
2.0-38	1		2.2-11	1
2.1-1	1		2.2-12	1
2.1-2	1		2.2-13	1
2.1-3	1		2.2-14	1
2.1-4	1		2.2-15	1
2.1-5	1		2.2-16	1
2.1-6	1		2.2-17	1
2.1-7	1		2.2-18	1
2.1-8	1		2.2-19	1
2.1-9	1		2.2-20	1
2.1-10	1		2.2-21	1
2.1-11	1		2.2-22	1
2.1-12	1		2.2-23	1
2.1-13	1		2.2-24	1
2.1-14	1		2.2-25	1

LIST OF EFFECTIVE PAGES FOR HI-STORM 100 FSAR REVISION 1

Page	Revision		Page	Revision
2.2-26	1		2.4-1	1
2.2-27	1		2.4-2	1
2.2-28	1		2.4-3	1
2.2-29	1		2.5-1	0
2.2-30	1		2.6-1	1
2.2-31	1		2.6-2	1
2.2-32	1		2.6-3	1
2.2-33	1		2A-1	1
2.2-34	1		2A-2	1
2 2-35	1		2A-3	1
2 2-36	1		2A-4	1
2 2-37	1		2A-5	1
2.2-38	1		Fig. 2.A.1	1
2.2-39	1		2.B-1	1
2.2-40	1		2.B-2	1
2.2-41	1		2.B-3	1
2.2-42	1		2.B-4	1
2.2-43	1		Fig. 2.B.1	1
2.2-44	1			
2.2-45	1			
2.2-46	1			
2.2-47	1			
2.2-48	1			
2 2-49	1			
2.2-50	1			
2.2-51	Deleted			
2.2-52	Deleted			
2.3-1	1			
2.3-2	1			
2.3-3	1			
2.3-4	1			
2.3-5	1			
2.3-6	1			
2.3-7	1			
2.3-8	1			
2.3-9	1			
2.3-10	1			
2.3-11	1			
2.3-12	1			
2.3-13	1			
2.3-14	1			
2.3-15	1			
2.3-16	1			
2.3-17	1			
2.3-18	1			
2.3-19	1			
2.3-20	1			
2.3-21	1			
Fig. 2.3.1	0			
Fig. 2.3 2	0			
Fig. 2.3.3	0			
Fig. 2 3.4	0			

LIST OF EFFECTIVE PAGES FOR HI-STORM 100 FSAR REVISION 1

Page	Revision		Page	Revision
3.0-1	1		3.1-43	1
3.0-2	1		Fig 3.1.1	1
3.0-3	1		Fig. 3.1.2	1
3.0-4	1		Fig. 3.1.3	1
3.0-5	1		3.2-1	1
3.0-6	1		3.2-2	1
3 0-7	1		3 2-3	1
3.0-8	1		3.2-4	1
3.0-9	1		3.2-5	1
3.0-10	1		3.2-6	1
3.1-1	1		3.2-7	1
3.1-2	1		3.2-8	1
3.1-3	1		3.2-9	1
3.1-4	1		3.2-10	1
3.1-5	1		3.2-11	1
3.1-6	1		3.2-12	1
3.1-7	1		3.3-1	1
3.1-8	1		3.3-2	1
3.1-9	1		3.3-3	1
3.1-10	1		3.3-4	1
3.1-11	1		3.3-5	1
3.1-12	1		3.3-6	1
3.1-13	1		3.3-7	1
3.1-14	1		3.3-8	1
3.1-15	1		3.3-9	1
3.1-16	1		3.3-10	Deleted
3.1-17	1		3.4-1	1
3.1-18	1		3.4-2	1
3.1-19	1		3.4-3	1
3.1-20	1		3.4-4	1
3.1-21	1		3.4-5	1
3.1-22	1		3.4-6	1
3.1-23	1		3.4-7	1
3.1-24	1		3.4-8	1
3.1-25	1		3.4-9	1
3.1-26	1		3.4-10	1
3.1-27	1		3.4-11	1
3.1-28	1		3.4-12	1
3.1-29	1		3.4-13	1
3.1-30	1		3.4-14	1
3.1-31	1		3.4-15	1
3.1-32	1		3.4-16	1
3.1-33	1		3.4-17	1
3.1-34	1		3.4-18	1
3.1-35	1		3.4-19	1
3.1-36	1		3.4-20	1
3.1-37	1		3 4-21	1
3.1-38	1		3.4-22	1
3.1-39	1		3.4-23	1
3.1-40	1		3.4-24	1
3.1-41	1		3.4-25	1
3.1-42	1		3.4-26	1

LIST OF EFFECTIVE PAGES FOR HI-STORM 100 FSAR REVISION 1

Page	Revision		Page	Revision
3.4-27	1		3.4-79	1
3.4-28	1		3.4-80	1
3.4-29	1		3.4-81	1
3.4-30	1B		3.4-82	1
3.4-31	1		3.4-83	1
3.4-32	1		3.4-84	1
3.4-33	1		3.4-85	1
3.4-34	1		3.4-86	1
3.4-35	1		3.4-87	1
3.4-36	1		3.4-88	1
3.4-37	1		3 4-89	1
3.4-38	1		3.4-90	1
3.4-39	1		3.4-91	1
3.4-40	1		3.4-92	1
3.4-41	1		3.4-93	1
3.4-42	1		3.4-94	1
3.4-43	1		3.4-95	1
3.4-44	1		3.4-96	1
3.4-45	1		3.4-97	1
3.4-46	1		3.4-98	1
3.4-47	1		3.4-99	1
3.4-48	1		3.4-100	1
3.4-49	1		3.4-101	1
3.4-50	1		3.4-102	1
3.4-51	1		3.4-103	1
3.4-52	1		3.4-104	1
3.4-53	1		3.4-105	1
3.4-54	1		3.4-106	1
3.4-55	1		3.4-107	1
3.4-56	1		3.4-108	1
3.4-57	1		3.4-109	1
3.4-58	1		3.4-110	1
3.4-59	1		3.4-111	1
3.4-60	1		3.4-112	1
3.4-61	1		3.4-113	1
3.4-62	1		3.4-114	1
3.4-63	1		3.4-115	1
3.4-64	1		3.4-116	1
3.4-65	1		3.4-117	1
3.4-66	1		3.4-118	1
3.4-67	1		3.4-119	1
3.4-68	1		3.4-120	1
3.4-69	1		3.4-121	1
3.4-70	1		3.4-122	1
3.4-71	1		3.4-123	Deleted
3.4-72	1		3.4-124	Deleted
3.4-73	1		Fig. 3.4.1	0
3.4-74	1		Fig. 3.4 2	1
3.4-75	1		Fig. 3.4.3	0
3.4-76	1		Fig. 3 4.4	0
3.4-77	1		Fig. 3 4.5	1
3.4-78	1		Fig. 3.4.6	0

LIST OF EFFECTIVE PAGES FOR HI-STORM 100 FSAR REVISION 1

Page	Revision		Page	Revision
Fig. 3.4.7	0		3.5-8	0
Fig. 3 4.8	0		3.5-9	0
Fig. 3.4.9	0		3.5-10	0
Fig. 3.4.10	1		3.5-11	0
Fig. 3.4.11	0		3.5-12	0
Fig. 3.4.12	0		3.5-13	0
Fig. 3.4.13	0		3.5-14	0
Fig. 3.4.14	0		3.5-15	0
Fig. 3.4.15	0		3.5-16	0
Fig. 3.4.16	0		3.5-17	0
Fig. 3.4 16a	0		3.5-18	0
Fig. 3.4.16b	0		3.5-19	0
Fig. 3.4.17	0		Fig. 3.5.1	0
Fig. 3.4.18	0		Fig. 3.5.2	0
Fig. 3.4.19	0		Fig. 3.5.3	0
Fig. 3.4.20	0		Fig. 3.5.4	0
Fig. 3.4.21	0		Fig. 3.5.5	0
Fig. 3.4.22	0		Fig. 3.5.6	0
Fig 3.4.23	0		Fig. 3.5.7	0
Fig. 3.4.24	0		Fig. 3.5.8	0
Fig. 3.4.25	0		Fig. 3.5.9	0
Fig. 3.4.26	0		3.6-1	1
Fig. 3.4.27	0		3.6-2	1
Fig. 3.4.28	0		3.6-3	1
Fig. 3.4.29	0		3 6-4	1
Fig. 3.4.30	1		3.6-5	1
Fig. 3.4 31	1		3.6-6	1
Fig. 3.4.32	1		3.6-7	1
Fig. 3.4.33	1		3.6-8	1
Fig. 3.4.34	1		3.6-9	1
Fig. 3.4.35	1		3.6-10	Deleted
Fig. 3 4.36	1		3.7-1	1
Fig. 3.4.37	1		3.7-2	1
Fig. 3.4.38	1		3.7-3	1
Fig. 3.4.39	1		3.7-4	1
Fig. 3.4.40	1		3.7-5	1
Fig. 3.4.41	1		3.7-6	1
Fig. 3.4.42	1		3.7-7	1
Fig. 3.4.43	1		3.7-8	1
Fig. 3.4.44	1		3.7-9	1
Fig. 3.4.45	1		3.7-10	1
Fig. 3.4.46	1		3.7-11	1
Fig. 3.4.47	1		3.7-12	1
Fig. 3.4-48	1		3.7-13	Deleted
Fig. 3.4-49	1		3.7-14	Deleted
3.5-1	0		3.8-1	1
3.5-2	0		3 8-2	1
3.5-3	0		3.A-1	1
3.5-4	0		3.A-2	1
3 5-5	0		3.A-3	1
3.5-6	0		3.A-4	1
3.5-7	0		3.A-5	1

LIST OF EFFECTIVE PAGES FOR HI-STORM 100 FSAR REVISION 1

Page	Revision		Page	Revision
3.A-6	1		3.B-24	0
3.A-7	1		3.B-25	0
3.A-8	1		3.B-26	0
3.A-9	1		3.B-27	0
3.A-10	1		3.B-28	0
3.A-11	1		3.B-29	0
3.A-12	1		3.B-30	0
3.A-13	1		3.B-31	0
3.A-14	1		3.B-32	0
3.A-15	1		3.B-33	0
Fig. 3.A.1	0		3.B-34	0
Fig. 3.A 2	0		3.B-35	0
Fig. 3.A 3	0		3.B-36	0
Fig. 3.A.4	0		3.B-37	0
Fig. 3.A.5	0		3.B-38	0
Fig. 3.A.6	0		3.B-39	0
Fig. 3.A.7	0		3.B-40	0
Fig. 3.A.8	0		3.B-41	0
Fig. 3.A.9	0		3.B-42	0
Fig. 3 A.10	0		3.B-43	0
Fig. 3.A.11	0		3.B-44	0
Fig. 3.A.12	0		3.B-45	0
Fig. 3 A.13	0		3.B-46	0
Fig. 3.A.14	0		3.B-47	0
Fig. 3.A.15	0		3.B-48	0
Fig. 3.A.16	0		3.B-49	0
Fig. 3.A.17	0		3.B-50	0
Fig. 3.A.18	0		3.B-51	0
Fig. 3.A.19 through 3.A.30	Deleted		3.B-52	0
3.B-1	0		3.B-53	0
3.B-2	0		3.B-54	0
3.B-3	0		3.B-55	0
3.B-4	0		3.B-56	0
3.B-5	0		3.B-57	0
3.B-6	0		3.B-58	0
3.B-7	0		3.B-59	0
3 B-8	0		3.B-60	0
3.B-9	0		3.B-61	0
3.B-10	0		3.B-62	0
3.B-11	0		3.C-1	0
3.B-12	0		3.C-2	0
3.B-13	0		3.C-3	0
3.B-14	0		3.C-4	0
3.B-15	0		3.C-5	0
3.B-16	0		3.C-6	0
3.B-17	0		3.C-7	0
3.B-18	0		3.C-8	0
3 B-19	0		Fig. 3.C.1	0
3.B-20	0		Fig. 3.C.2	0
3 B-21	0		Fig. 3.C.3	0
3.B-22	0		3.D-1	1
3.B-23	0		3 D-2	1

LIST OF EFFECTIVE PAGES FOR HI-STORM 100 FSAR REVISION 1

Page	Revision		Page	Revision
3.D-3	1		3.G-8	1
3.D-4	1		3.G-9	1
3.D-5	1		3.G-10	1
3.D-6	1		3.G-11	1
3.D-7	1		3.G-12	1
3.D-8	1		3.G-13	1
3 D-9	1		Fig. 3.G.1	0
3.D-10	1		Fig. 3.G.2	0
3.D-11	1		Fig. 3.G.3	0
3.D-12	1		Fig. 3.G.4	0
3.D-13	1		Fig. 3.G.5	0
3.D-14	1		3.H-1	1
3.D-15	1		3.H-2	1
Fig. 3.D.1	0		3.H-3	1
Fig. 3.D.2a	0		3.H-4	1
Fig. 3.D.2b	0		3.H-5	1
Fig. 3.D.2c	0		3.H-6	1
Fig. 3.D.3	0		3.H-7	1
Fig. 3.D.4a	0		Fig. 3.H.1	0
Fig. 3.D.4b	0		3.I-1	1
Fig. 3.D.4c	0		3.I-2	1
Fig. 3.D.5a	0		3.I-3	1
Fig. 3.D.5b	0		3.I-4	1
Fig. 3.D.5c	0		3.I-5	1
3.E-1	1		3.I-6	1
3.E-2	1		3.I-7	1
3.E-3	1		3.I-8	1
3.E-4	1		3.I-9	1
3.E-5	1		3.I-10	1
3.E-6	1		Fig. 3.I.1	0
3.E-7	1		Appendix 3 J	Deleted
3.E-8	1		3.K-1	1
3.E-9	1		3.K-2	1
3.E-10	1		3.K-3	1
Fig. 3.E.1	0		3.K-4	1
Fig. 3.E.2	0		3.K-5	1
Fig. 3.E.3	0		3.K-6	1
3.F-1	0		3.K-7	1
3.F-2	0		3.L-1	1
3.F-3	0		3.L-2	1
3.F-4	0		3.L-3	1
Fig. 3.F.1	0		3.L-4	1
Fig. 3.F.2	0		3.L-5	1
Fig. 3.F.3	0		3.L-6	1
Fig. 3.F.4	0		3.L-7	1
3.G-1	1		3.L-8	1
3 G-2	1		3.L-9	1
3.G-3	1		3.L-10	1
3.G-4	1		3.L-11	1
3.G-5	1		3.L-12	1
3.G-6	1		3 L-13	1
3.G-7	1		3.M-1	1

LIST OF EFFECTIVE PAGES FOR HI-STORM 100 FSAR REVISION 1

Page	Revision		Page	Revision
3.M-2	1		3.W-6	1
3.M-3	1		3.W-7	1
3.M-4	1		3.W-8	1
3.M-5	1		3.W-9	1
3.M-6	1		3.W-10	1
3.M-7	1		Fig. 3.W.1	0
3.M-8	1		3.X-1	1
3.M-9	1		3.X-2	1
3.M-10	1		3.X-3	1
3.M-11	1		3 X-4	1
3.M-12	1		3.X-5	1
3.M-13	1		3.X-6	1
3.M-14	1		3.X-7	1
3.M-15	1		3.X-8	1
3.M-16	1		3.X-9	1
3.M-17	1		3.X-10	1
3.M-18	1		Fig. 3.X.1	0
3.M-19	Deleted		Fig. 3.X.2	0
Appendix 3.N	Deleted		Fig. 3.X.3	0
Appendix 3.O	Deleted		Fig. 3.X.4	0
Appendix 3.P	Deleted		Fig. 3 X.5	0
Appendix 3.Q	Deleted		3.Y-1	1
Appendix 3.R	Deleted		3.Y-2	1
Appendix 3.S	Deleted		3.Y-3	1
Appendix 3.T	Deleted		3.Y-4	1
3.U-1	1		3.Y-5	1
3.U-2	1		3.Y-6	1
3.U-3	1		3.Y-7	1
3.U-4	1		3.Y-8	1
3.U-5	1		3.Y-9	1
3.U-6	1		3.Y-10	1
3.U-7	1		3.Y-11	1
3.U-8	1		3.Y-12	1
3.U-9	1		3.Y-13	1
3.U-10	1		3.Y-14	1
Fig. 3.U.1	0		3.Y-15	1
3.V-1	1		3.Y-16	1
3.V-2	1		3.Y-17	1
3.V-3	1		3.Y-18	1
3.V-4	1		3.Y-19	1
3.V-5	1		3.Y-20	1
3.V-6	1		Fig. 3.Y.1	0
3.V-7	1		Fig. 3.Y.2	0
3.V-8	1		3 Z-1	0
3.V-9	1		3 Z-2	0
3.V-10	1		3.Z-3	0
Fig. 3.V.1	1		3.Z-4	0
3.W-1	1		3.Z-5	0
3.W-2	1		3.Z-6	0
3.W-3	1		3 Z-7	0
3.W-4	1		3 Z-8	0
3.W-5	1		3.Z-9	0

LIST OF EFFECTIVE PAGES FOR HI-STORM 100 FSAR REVISION 1

Page	Revision		Page	Revision
3.Z-10	0		3.AD-2	1
3.Z-11	0		3.AD-3	1
3.Z-12	0		3.AD-4	1
Fig. 3.Z.1	0		3 AD-5	1
Fig. 3.Z.2	0		3.AD-6	1
Fig. 3.Z.3	0		3.AD-7	1
Fig. 3.Z.4	0		3.AD-8	1
Fig. 3.Z.5	0		3.AD-9	1
Fig. 3.Z.6	0		3.AD-10	1
3.AA-1	1		3.AD-11	1
3.AA-2	1		3.AD-12	1
3.AA-3	1		3.AD-13	1
3.AA-4	1		3.AD-14	1
3.AA-5	1		3.AD-15	1
3.AA-6	1		3.AD-16	1
3.AA-7	1		3.AD-17	1
3.AA-8	1		3.AD-18	1
Fig. 3.AA.1	0		3.AD-19	1
Fig. 3.AA.2	0		Fig. 3.AD.1	0
Fig. 3.AA.3	0		Fig. 3.AD.2	0
Fig. 3.AA.4	0		Fig. 3.AD.3	0
Fig. 3.AA 5	0		3.AE-1	1
Fig. 3 AA.6	0		3 AE-2	1
Fig. 3.AA.7	0		3.AE-3	1
Fig. 3.AA.8	0		3.AE-4	1
3.AB-1	1		3.AE-5	1
3.AB-2	1		3.AE-6	1
3.AB-3	1		3.AE-7	1
3.AB-4	1		Fig. 3.AE.1	1
3.AB-5	1		Fig. 3.AE.1b	Deleted
3.AB-6	1		Fig. 3.AE.1c	Deleted
3.AB-7	1		Fig. 3.AE.2	1
3.AB-8	1		Fig. 3.AE.3	0
3.AB-9	1		Fig. 3.AE.4	Deleted
3.AB-10	1		3.AF-1	1
3.AB-11	1		3 AF-2	1
3.AB-12	1		3.AF-3	1
3.AB-13	1		3.AF-4	1
3.AB-14	1		3.AF-5	1
3.AC-1	1		3.AF-6	1
3.AC-2	1		3.AF-7	1
3.AC-3	1		3 AF-8	1
3.AC-4	1		3 AG-1	1
3.AC-5	1		3.AG-2	1
3.AC-6	1		3.AG-3	1
3.AC-7	1		3.AG-4	1
3.AC-8	1		3.AG-5	1
3.AC-9	1		3.AG-6	1
3 AC-10	1		3.AG-7	1
3.AC-11	1		3.AG-8	1
3.AC-12	1		3.AG-9	1
3.AD-1	1		3.AG-10	1

LIST OF EFFECTIVE PAGES FOR HI-STORM 100 FSAR REVISION 1

Page	Revision		Page	Revision
3.AG-11	1		3.AJ-5	1
3.AG-12	1		3 AJ-6	1
3.AG-13	1		3.AJ-7	1
3 AG-14	1		3.AJ-8	1
3.AG-15	1		3.AJ-9	1
3 AG-16	1		3.AJ-10	1
3.AG-17	1		3.AJ-11	1
3.AG-18	1		3.AJ-12	1
3.AG-19	1		3.AJ-13	1
3.AG-20	1		3.AJ-14	1
3.AG-21	1		3.AJ-15	1
3 AG-22	1		3.AJ-16	1
3.AG-23	1		3.AJ-17	1
3 AG-24	1		3.AJ-18	1
3.AH-1	1		3.AJ-19	1
3.AH-2	1		Fig. 3.AJ.1	0
3.AH-3	1		Fig. 3.AJ.2	0
3 AH-4	1		Fig. 3.AJ 3	0
3.AH-5	1		3.AK-1	1
3.AH-6	1		3.AK-2	1
3.AH-7	1		3.AK-3	1
3.AH-8	1		3.AK-4	1
3.AH-9	1		3.AK-5	1
3.AI-1	1		3.AK-6	1
3 AI-2	1		3.AK-7	1
3 AI-3	1		3.AK-8	1
3.AI-4	1		3.AK-9	1
3 AI-5	1		3.AK-10	1
3 AI-6	1		3.AK-11	1
3.AI-7	1		3.AK-12	1
3.AI-8	1		3.AK-13	1
3.AI-9	1		3.AK-14	1
3.AI-10	1		3.AK-15	1
3.AI-11	1		3.AK-16	1
3.AI-12	1		3.AK-17	1
3.AI-13	1		3.AK-18	1
3.AI-14	1		3.AL-1	1
3.AI-15	1		3.AL-2	1
3 AI-16	1		3.AL-3	1
3.AI-17	1		3.AL-4	1
3.AI-18	1		3.AL-5	1
3.AI-19	1		3.AL-6	1
Fig. 3.AI.1	0		3.AL-7	1
Fig. 3.AI.2	0		3.AL-8	1
Fig. 3.AI.3	0		3.AL-9	1
Fig. 3.AI.4	0		3.AL-10	1
Fig. 3 AI 5	0		3.AM-1	0
Fig. 3.AI.6	0		3.AM-2	0
3.AJ-1	1		3.AM-3	0
3 AJ-2	1		3.AM-4	0
3.AJ-3	1		3 AM-5	0
3.AJ-4	1		3 AM-6	0

LIST OF EFFECTIVE PAGES FOR HI-STORM 100 FSAR REVISION 1

Page	Revision		Page	Revision
3.AM-7	0		Fig. 3.AN.15	0
3.AM-8	0		Fig. 3.AN.16	0
3.AM-9	0		Fig. 3.AN.17	0
3.AM-10	0		Fig. 3.AN.18	0
3.AM-11	0		Fig. 3.AN.19	0
3.AM-12	0		Fig. 3.AN.20	0
3.AM-13	0		Fig. 3 AN.21	0
3.AM-14	0		Fig. 3.AN.22	0
3.AM-15	0		Fig. 3.AN.23	0
3.AM-16	0		Fig. 3.AN 24	0
3.AM-17	0		Fig. 3.AN 25	0
3.AM-18	0		Fig. 3.AN.26	0
3.AM-19	0		Fig. 3.AN.27	0
3.AM-20	0		Fig. 3.AN.28	0
3.AM-21	0		Fig. 3.AN.29	0
3.AM-22	0		Fig. 3.AN.30	0
3.AM-23	0		3.AO-1	Not Used
3.AM-24	0		3.AP-1	Not Used
3.AM-25	0		3.AQ-1	1
3.AM-26	0		3.AQ-2	1
3.AM-27	0		3.AQ-3	1
3.AM-28	0		3.AQ-4	1
3 AM-29	0		3.AQ-5	1
3.AM-30	0		3.AQ-6	1
3.AN-1	1		3.AQ-7	1
3.AN-2	1		3.AQ-8	1
3.AN-3	1		3.AQ-9	1
3.AN-4	1		3.AQ-10	1
3.AN-5	1		3.AR-1	1
3.AN-6	1		3.AR-2	1
3.AN-7	1		3.AR-3	1
3.AN-8	1		3.AR-4	1
3.AN-9	1		3.AR-5	1
3.AN-10	1		3.AR-6	1
3.AN-11	1		3 AR-7	1
3.AN-12	1		3.AR-8	1
3.AN-13	1		3.AR-9	1
3.AN-14	1		3.AR-10	1
Fig. 3.AN.1	0		3.AR-11	1
Fig. 3 AN.2	0		3.AS-1	1
Fig. 3.AN.3	0		3.AS-2	1
Fig. 3.AN.4	0		3.AS-3	1
Fig 3.AN.5	0		3.AS-4	1
Fig. 3.AN 6	0		3.AS-5	1
Fig. 3.AN.7	0		3.AS-6	1
Fig. 3.AN.8	0		3.AS-7	1
Fig. 3.AN.9	0		3.AS-8	1
Fig. 3 AN.10	0		3.AS-9	1
Fig. 3.AN.11	0		3.AS-10	1
Fig. 3.AN.12	0		3.AS-11	1
Fig. 3.AN.13	0		3.AS-12	1
Fig 3.AN.14	0		3.AS-13	1

LIST OF EFFECTIVE PAGES FOR HI-STORM 100 FSAR REVISION 1

Page	Revision		Page	Revision
4.0-1	Deleted		4.4-3	1
4.0-2	Deleted		4.4-4	1
4.0-3	Deleted		4.4-5	1
4.1-1	1		4.4-6	1
4.1-2	1		4.4-7	1
4.1-3	1		4.4-8	1
4.1-4	1		4.4-9	1
4.1-5	1		4.4-10	1
4.1-6	1		4.4-11	1
4.1-7	1		4.4-12	1
4.2-1	1		4.4-13	1
4.2-2	1		4.4-14	1
4.2-3	1		4.4-15	1
4.2-4	1		4.4-16	1
4.2-5	1		4.4-17	1
4.2-6	1		4.4-18	1
4.2-7	1		4.4-19	1
4.2-8	1		4.4-20	1
4.2-9	1		4.4-21	1
4.2-10	1		4.4-22	1
4.2-11	1		4.4-23	1
Fig. 4.2.1	0		4.4-24	1
Fig. 4.2.2	0		4.4-25	1
4.3-1	1		4.4-26	1
4.3-2	1		4.4-27	1
4.3-3	1		4.4-28	1
4.3-4	1		4.4-29	1
4.3-5	1		4.4-30	1
4.3-6	1		4.4-31	1
4.3-7	1		4.4-32	1
4.3-8	1		4.4-33	1
4.3-9	1		4.4-34	1
4.3-10	1		4.4-35	1
4.3-11	1		4.4-36	1
4.3-12	1		4.4-37	1
4.3-13	1		4.4-38	1
4.3-14	1		4.4-39	1
4.3-15	1		4.4-40	1
4.3-16	1		4.4-41	1
4.3-17	1		4.4-42	1
4.3-18	1		4.4-43	1
4.3-19	1		4.4-44	1
4.3-20	1		4.4-45	1
4.3-21	1		4.4-46	1
4.3-22	1		4.4-47	1
4.3-23	Deleted		4.4-48	1
Fig. 4.3.1	0		4 4-49	1
Fig. 4.3.2	0		4.4-50	1
Fig. 4.3.3	0		4.4-51	1
Fig. 4 3.4	0		4.4-52	1
4.4-1	1		4.4-53	1
4.4-2	1		4.4-54	1

LIST OF EFFECTIVE PAGES FOR HI-STORM 100 FSAR REVISION 1

Page	Revision		Page	Revision
4.4-55	1		4.5-13	1
4.4-56	1		4.5-14	1
4.4-57	1		4.5-15	1
4.4-58	1		4.5-16	1
4.4-59	1		4.5-17	1
4.4-60	1		4.5-18	1
4.4-61	1		4.5-19	1
4.4-62	1		4.5-20	1
4.4-63	1		4.5-21	1
4.4-64	1		4.5-22	1
4.4-65	1		4.5-23	1
4.4-66	1		4.5-24	1
4.4-67	1		4.5-25	1
4.4-68	1		4.5-26	1
Fig. 4.4.1	0		Fig. 4.5.1	0
Fig. 4.4.2	0		Fig. 4.5.2	1
Fig 4.4.3	0		Fig. 4.5.3	Deleted
Fig. 4.4.4	0		4.6-1	0
Fig. 4.4.5	0		4.6-2	0
Fig. 4.4.6	0		4.7-1	1
Fig. 4.4.7	0		4.7-2	1
Fig. 4.4.8	0		4.7-3	1
Fig. 4.4.9	0		4.A-1	1
Fig. 4.4.10	0		4.A-2	1
Fig. 4.4.11	0		4.A-3	1
Fig. 4.4.12	0		4.A-4	1
Fig. 4.4.13	0		4.A-5	1
Fig. 4.4.14	Deleted		4.A-6	1
Fig. 4.4.15	0		4.A-7	1
Fig. 4.4.16	1		4.A-8	1
Fig. 4.4.17	1		4.A-9	1
Fig. 4.4.18	0		4.A-10	1
Fig. 4.4.19	1		4.A-11	1
Fig. 4.4.20	1		4.A-12	1
Fig. 4.4.21	0		4 A-13	1
Fig. 4.4.22	Deleted		4 A-14	1
Fig. 4.4.23	Deleted		4.A-15	1
Fig. 4.4.24	0		4.A-16	1
Fig. 4.4.25	1		4.A-17	1
Fig. 4.4.26	1		4.A-18	1
4.5-1	1		4.A-19	1
4.5-2	1		4.A-20	1
4.5-3	1		4 A-21	1
4.5-4	1		4.A-22	1
4.5-5	1		4.A-23	1
4.5-6	1		Fig. 4.A.1	1
4.5-7	1		Fig. 4.A.2	1
4.5-8	1		Fig. 4.A 3	1
4.5-9	1		Fig. 4.A.4	1
4.5-10	1		Fig. 4.A.5	1
4.5-11	1		Fig. 4.A.6	1
4.5-12	1		Fig. 4.A.7	1

LIST OF EFFECTIVE PAGES FOR HI-STORM 100 FSAR REVISION 1

Page	Revision		Page	Revision
Fig. 4.A.8	1			
Fig. 4.A.9	1			
Fig. 4.A.10	1			
Fig. 4.A.11	1			
Fig. 4.A.12	1			
Fig. 4.A.13	1			
4.B-1	1			
4.B-2	1			
4.B-3	1			
4.B-4	1			
4.B-5	1			
4.B-6	1			
4.B-7	1			
4.B-8	1			
4.B-9	1			
Fig. 4.B.1	1			
Fig. 4.B.2	1			
Fig. 4 B.3	1			
Fig. 4.B.4	1			
Fig. 4.B.5	1			
Fig. 4.B.6	1			
Fig. 4.B.7	1			
Fig. 4.B 8	1			

LIST OF EFFECTIVE PAGES FOR HI-STORM 100 FSAR REVISION 1

Page	Revision		Page	Revision
5.0-1	1		5.2-18	1
5.0-2	1		5.2-19	1
5.0-3	1		5.2-20	1
5.1-1	1		5.2-21	1
5.1-2	1		5.2-22	1
5 1-3	1		5.2-23	1
5.1-4	1		5.2-24	1
5.1-5	1		5.2-25	1
5.1-6	1		5.2-26	1
5.1-7	1		5.2-27	1
5.1-8	1		5.2-28	1
5.1-9	1		5.2-29	1
5.1-10	1		5.2-30	1
5.1-11	1		5.2-31	1
5.1-12	1		5.2-32	1
5.1-13	1		5.2-33	1
5.1-14	1		5.2-34	1
5.1-15	1		5.2-35	1
5.1-16	1		5.2-36	1
5.1-17	1		5.2-37	1
5.1-18	1		5.2-38	1
5.1-19	1		5.2-39	1
Fig. 5.1.1	1		5.2-40	1
Fig. 5.1.2	0		5.2-41	1
Fig. 5.1.3	1		5.2-42	1
Fig. 5.1.4	0		5.2-43	1
Fig. 5.1.5	0		5.2-44	1
Fig. 5.1.6	0		5.2-45	1
Fig. 5.1.7	0		5.2-46	1
Fig. 5.1.8	0		5.2-47	1
Fig. 5.1.9	0		5.2-48	1
Fig. 5.1.10	0		5 2-49	1
Fig. 5.1.11	0		5.2-50	1
Fig. 5.1.12	1		5.2-51	1
5 2-1	1		5.2-52	1
5.2-2	1		5.2-53	1
5.2-3	1		5.3-1	1
5.2-4	1		5.3-2	1
5.2-5	1		5.3-3	1
5.2-6	1		5.3-4	1
5.2-7	1		5.3-5	1
5.2-8	1		5.3-6	1
5.2-9	1		5.3-7	1
5 2-10	1		5.3-8	1
5.2-11	1		5.3-9	1
5.2-12	1		5.3-10	1
5.2-13	1		5 3-11	1
5.2-14	1		5.3-12	1
5.2-15	1		5.3-13	1
5.2-16	1		Fig. 5.3.1	1
5 2-17	1		Fig. 5 3 2	0

LIST OF EFFECTIVE PAGES FOR HI-STORM 100 FSAR REVISION 1

Page	Revision		Page	Revision
Fig. 5.3.3	0		5.4-34	1
Fig. 5.3.4	1		5.5-1	0
Fig. 5.3.5	0		5.6-1	1
Fig. 5.3.6	0		5.6-2	1
Fig. 5.3.7	1		5.6-3	1
Fig. 5.3.8	0		5 A-1	0
Fig. 5.3.9	0		5.A-2	0
Fig. 5.3.10	1		5.A-3	0
Fig. 5.3.11	1		5.B-1	0
Fig. 5.3.12	0		5.B-2	0
Fig. 5.3.13	0		5.B-3	0
Fig. 5.3.14	1		5.B-4	0
Fig. 5.3.15	1		5.B-5	0
Fig. 5.3.16	1		5.B-6	0
Fig. 5.3.17	1		5.B-7	0
Fig. 5.3.18	1		5.C-1	0
Fig. 5.3.19	1		5.C-2	0
Fig. 5.3-20	1		5.C-3	0
Fig. 5.3-21	1		5.C-4	0
5.4-1	1		5.C-5	0
5.4-2	1		5.C-6	0
5.4-3	1		5.C-7	0
5.4-4	1		5.C-8	0
5.4-5	1		5.C-9	0
5.4-6	1		5.C-10	0
5.4-7	1		5.C-11	0
5.4-8	1		5.C-12	0
5.4-9	1		5.C-13	0
5.4-10	1		5.C-14	0
5.4-11	1		5.C-15	0
5.4-12	1		5.C-16	0
5.4-13	1		5.C-17	0
5.4-14	1		5.C-18	0
5.4-15	1		5.C-19	0
5.4-16	1		5.C-20	0
5.4-17	1		5.C-21	0
5.4-18	1		5.C-22	0
5 4-19	1		5.C-23	0
5.4-20	1		5.C-24	0
5.4-21	1		5.C-25	0
5.4-22	1		5.C-26	0
5.4-23	1		5 C-27	0
5.4-24	1		5.C-28	0
5.4-25	1		5.C-29	0
5.4-26	1		5.C-30	0
5.4-27	1		5.C-31	0
5.4-28	1		5.C-32	0
5 4-29	1		5.C-33	0
5.4-30	1		5.C-34	0
5.4-31	1		5.C-35	0
5.4-32	1		5.C-36	0
5.4-33	1		5.C-37	0

LIST OF EFFECTIVE PAGES FOR HI-STORM 100 FSAR REVISION 1

Page	Revision		Page	Revision
5.C-38	0			
5.C-39	0			
5.C-40	0			
5.C-41	0			
5.C-42	0			
5.C-43	0			
5.C-44	0			
5.C-45	0			
5.C-46	0			
5.C-47	0			
5.C-48	0			
5.C-49	0			
5.C-50	0			
5.C-51	0			
5.C-52	0			
5.C-53	0			
5.C-54	0			
5.C-55	0			
5.C-56	0			
5.C-57	0			
5.C-58	0			
5.C-59	0			
5.C-60	0			
5.C-61	0			
5.D-1	0			
5.D-2	0			
5.D-3	0			
5.D-4	0			
5.D-5	0			
5.D-6	0			
5.E-1	1			
5.E-2	1			
5.E-3	1			
5.E-4	1			

LIST OF EFFECTIVE PAGES FOR HI-STORM 100 FSAR REVISION 1

Page	Revision		Page	Revision
6.1-1	1		6 2-35	1
6.1-2	1		6.2-36	1
6.1-3	1		6.2-37	1
6.1-4	1		6.2-38	1
6.1-5	1		6.2-39	1
6.1-6	1		6 2-40	1
6.1-7	1		6.2-41	1
6.1-8	1		6.2-42	1
6.1-9	1		6.2-43	1
6.1-10	1		6.2-44	1
6.1-11	1		6.2-45	1
6.1-12	1		6.2-46	1
6.1-13	1		6.2-47	1
6.1-14	1		6.2-48	1
6.1-15	1		6.2-49	1
6.1-16	1		6.2-50	1
6.1-17	1		6 2-51	1
6.1-18	1		6.2-52	1
6.2-1	1		6.2-53	1
6.2-2	1		6.2-54	1
6.2-3	1		6 2-55	1
6.2-4	1		6.2-56	1
6 2-5	1		6 2-57	1
6.2-6	1		6.2-58	1
6.2-7	1		6.2-59	1
6.2-8	1		6.2-60	1
6 2-9	1		6.2-61	1
6.2-10	1		6.2-62	1
6.2-11	1		6.2-63	1
6.2-12	1		6.3-1	1
6.2-13	1		6.3-2	1
6.2-14	1		6 3-3	1
6.2-15	1		6.3-4	1
6.2-16	1		6.3-5	1
6.2-17	1		6.3-6	1
6.2-18	1		6.3-7	1
6.2-19	1		6.3-8	1
6.2-20	1		6.3-9	1
6 2-21	1		6.3-10	1
6.2-22	1		6.3-11	1
6.2-23	1		6.3-12	1
6.2-24	1		6 3-13	1
6.2-25	1		6.3-14	1
6.2-26	1		Fig. 6.3.1	1
6.2-27	1		Fig. 6.3.1A	1
6.2-28	1		Fig. 6 3.2	1
6.2-29	1		Fig. 6 3.3	0
6.2-30	1		Fig. 6 3.4	1
6.2-31	1		Fig. 6.3.4A	1
6 2-32	1		Fig. 6 3 5	1
6.2-33	1		Fig. 6.3.6	0
6.2-34	1		Fig. 6.3.7	1

LIST OF EFFECTIVE PAGES FOR HI-STORM 100 FSAR REVISION 1

Page	Revision		Page	Revision
6.4-1	1		6.A-8	1
6.4-2	1		6.A-9	1
6.4-3	1		6.A-10	1
6.4-4	1		6.A-11	1
6.4-5	1		6.A-12	1
6.4-6	1		6.A-13	1
6.4-7	1		6.A-14	1
6.4-8	1		6.A-15	1
6.4-9	1		6.A-16	1
6.4-10	1		6.A-17	1
6.4-11	1		6.A-18	1
6.4-12	1		6.A-19	1
6.4-13	1		6.A-20	1
6.4-14	1		Fig. 6.A.1	0
6 4-15	1		Fig. 6.A.2	0
6.4-16	1		Fig. 6.A 3	0
6.4-17	1		Fig. 6.A 4	0
6.4-18	1		Fig. 6.A.5	0
6.4-19	1		Fig. 6.A.6	0
6.4-20	1		6.B-1	0
6.4-21	1		6.B-2	0
6.4-22	1		6.C-1	1
6.4-23	1		6 C-2	1
6.4-24	1		6.C-3	1
6.4-25	1		6.C-4	1
Fig. 6.4.1	Deleted		6.C-5	1
Fig. 6.4 2	1		6.C-6	1
Fig. 6.4.3	1		6.C-7	1
Fig. 6 4.4	1		6.C-8	1
Fig. 6.4.5	1		6.C-9	1
Fig. 6.4.6	1		6.C-10	1
Fig 6.4.7	1		6.C-11	1
Fig. 6.4.8	1		6.C-12	1
Fig. 6.4.9	1		6.C-13	1
Fig. 6 4.10	1		6.C-14	1
Fig. 6.4.11	1		6.C-15	1
Fig. 6.4.12	1		6.C-16	1
Fig. 6.4.13	1		6.C-17	1
Fig. 6.4.14	1		6.D-1	1
Fig. 6.4.15	1		6.D-2	1
6.5-1	0		6.D-3	1
6.6-1	0		6.D-4	1
6.7-1	1		6.D-5	1
6.7-2	1		6.D-6	1
6.A-1	1		6.D-7	1
6.A-2	1		6.D-8	1
6 A-3	1		6.D-9	1
6 A-4	1		6.D-10	1
6.A-5	1		6.D-11	1
6.A-6	1		6.D-12	1
6.A-7	1		6.D-13	1

LIST OF EFFECTIVE PAGES FOR HI-STORM 100 FSAR REVISION 1

Page	Revision		Page	Revision
6.D-14	1			
6.D-15	1			
6.D-16	1			
6.D-17	1			
6.D-18	1			
6.D-19	1			
6.D-20	1			
6.D-21	1			
6.D-22	1			
6.D-23	1			
6.D-24	1			
6 D-25	1			
6.D-26	1			
6.D-27	1			
6.D-28	1			
6.D-29	1			
6.D-30	1			
6.D-31	1			
6.D-32	1			
6.D-33	1			
6.D-34	1			
6.D-35	1			

LIST OF EFFECTIVE PAGES FOR HI-STORM 100 FSAR REVISION 1

Page	Revision		Page	Revision
7.0-1	1		7.A-14	1
7.1-1	1		7.A-15	1
7.1-2	1		7.A-16	1
7.1-3	1		7.A-17	1
7.1-4	1		7.A-18	1
7.1-5	1		7.A-19	1
7.1-6	1		7.A-20	1
7.1-7	1		7.A-21	1
Fig. 7.1.1	0		7.A-22	1
7.2-1	1		7.A-23	1
7.2-2	1		7.A-24	1
7.2-3	1		7.A-25	1
7.2-4	1		7.A-26	1
7.2-5	1		7.A-27	1
7.2-6	1		7.A-28	1
7.2-7	1		7.A-29	1
7.2-8	1		7.A-30	1
7.2-9	1		7.A-31	1
7.3-1	1		7.A-32	1
7.3-2	1		7.A-33	1
7.3-3	1		7.A-34	1
7.3-4	1		7.A-35	1
7.3-5	1		7.A-36	1
7.3-6	1		7.A-37	1
7.3-7	1		7.A-38	1
7.3-8	1		7.A-39	1
7.3-9	1		7.A-40	1
7.3-10	1		7.A-41	1
7.3-11	1		7.A-42	1
7.3-12	1		7.A-43	1
7.3-13	1		7.A-44	1
7.3-14	1		7.A-45	1
7.3-15	1		7.A-46	1
7.3-16	1		7.A-47	1
7.3-17	1		7.A-48	1
7.3-18	1		7.A-49	1
7.3-19	1		7.A-50	1
7.4-1	1		7.A-51	1
7.4-2	1		7.A-52	1
7.A-1	1		7.A-53	1
7.A-2	1		7.A-54	1
7.A-3	1		7.A-55	1
7.A-4	1		7.A-56	1
7.A-5	1		7.A-57	1
7.A-6	1		7.A-58	1
7.A-7	1		7.A-59	1
7.A-8	1		7.A-60	1
7.A-9	1		7.A-61	1
7.A-10	1		7.A-62	1
7.A-11	1		7.A-63	1
7.A-12	1		7.A-64	1
7.A-13	1		7.A-65	1

LIST OF EFFECTIVE PAGES FOR HI-STORM 100 FSAR REVISION 1

Page	Revision		Page	Revision
7.A-66	1			
7.A-67	1			
7.A-68	1			
7.A-69	1			
7.A-70	1			
7.A-71	1			
7.A-72	1			
7.A-73	1			
7.A-74	1			
7.A-75	1			
7.A-76	1			
7.A-77	1			
7.A-78	1			
7.A-79	1			
7.A-80	1			
7.A-81	1			
7.A-82	1			
7.A-83	1			
7.A-84	1			
7.A-85	1			
7.A-86	1			
7.A-87	1			
7.A-88	1			
7.A-89	1			
7.A-90	1			
7.A-91	1			

LIST OF EFFECTIVE PAGES FOR HI-STORM 100 FSAR REVISION 1

Page	Revision		Page	Revision
8.0-1	1		Fig. 8.1.2d	1
8.0-2	1		Fig. 8.1.2e	0
8.0-3	1		Fig. 8.1.2f	0
8.0-4	1		Fig. 8.1.3	0
8.0-5	1		Fig. 8.1.4	1
8.0-6	1		Fig. 8.1.5	0
8.1-1	1		Fig. 8.1.6	0
8.1-2	1		Fig. 8.1.7	1
8.1-3	1		Fig. 8.1.8	0
8.1-4	1		Fig. 8.1.9	0
8.1-5	1		Fig. 8.1.10	0
8.1-6	1		Fig. 8.1.11	0
8.1-7	1		Fig. 8.1.12	1
8.1-8	1		Fig. 8.1.13	1
8.1-9	1		Fig. 8.1.14	0
8.1-10	1		Fig. 8.1.15	0
8.1-11	1		Fig. 8.1.16	0
8.1-12	1		Fig. 8.1.17	0
8.1-13	1		Fig. 8.1.18	1
8.1-14	1		Fig. 8.1.19	1
8.1-15	1		Fig. 8.1.20	1
8.1-16	1		Fig. 8.1.21	1
8.1-17	1		Fig. 8.1.22a	1
8.1-18	1		Fig. 8.1.22b	1
8.1-19	1		Fig. 8.1.23	1
8.1-20	1		Fig. 8.1.24	0
8.1-21	1		Fig. 8.1.25	1
8.1-22	1		Fig. 8.1.26	1
8.1-23	1		Fig. 8.1.27	1
8.1-24	1		Fig. 8.1.28	1
8.1-25	1		Fig. 8.1.29a	1
8.1-26	1		Fig. 8.1.29b	1
8.1-27	1		Fig. 8.1.30	1
8.1-28	1		Fig. 8.1.31	1
8.1-29	1		Fig. 8.1.32	0
8.1-30	1		Fig. 8.1.33	1
8.1-31	1		Fig. 8.1.34a	1
8.1-32	1		Fig. 8.1.34b	Deleted
8.1-33	1		Fig. 8.1.35	0
8.1-34	1		Fig 8.1.36	0
8 1-35	1		Fig. 8.1.37	1
8.1-36	1		8.2-1	1
8.1-37	1		8.3-1	1
8.1-38	1		8.3-2	1
8.1-39	1		8.3-3	1
8.1-40	1		8.3-4	1
8.1-41	1		8.3-5	1
Fig. 8.1.1	1		8.3-6	1
Fig. 8.1.2a	0		8.3-7	1
Fig. 8.1.2b	0		8 3-8	1
Fig. 8.1.2c	1		8 3-9	1

LIST OF EFFECTIVE PAGES FOR HI-STORM 100 FSAR REVISION 1

Page	Revision		Page	Revision
8.3-10	1			
Fig. 8.3.1	1			
Fig. 8.3.2a	1			
Fig. 8.3.2b	0			
Fig. 8.3.2c	0			
Fig. 8.3.2d	0			
Fig. 8.3.3	0			
Fig. 8.3.4	1			
8.4-1	1			
8.4-2	1			
Fig. 8.4-1a	1			
Fig. 8.4-1b	1			
8.5-1	1			
8.5-2	1			
8.5-3	1			
8.5-4	1			
Fig. 8.5-1	0			
8 6-1	0			

LIST OF EFFECTIVE PAGES FOR HI-STORM 100 FSAR REVISION 1

Page	Revision		Page	Revision
9.0-1	0			
9.1-1	1			
9.1-2	1			
9.1-3	1			
9.1-4	1			
9.1-5	1			
9.1-6	1			
9.1-7	1			
9.1-8	1			
9.1-9	1			
9.1-10	1			
9.1-11	1			
9.1-12	1			
9.1-13	1			
9.1-14	1			
9.1-15	1			
9.1-16	1			
9.1-17	1			
9.1-18	1			
9.1-19	1			
9.1-20	1			
9.1-21	1			
9.1-22	1			
9.1-23	1			
9.1-24	1			
9.1-25	1			
9.1-26	1			
9.1-27	1			
9.1-28	1			
9.2-1	1			
9.2-2	1			
9.2-3	1			
9.2-4	1			
9.3-1	1			
9.4-1	0			

LIST OF EFFECTIVE PAGES FOR HI-STORM 100 FSAR REVISION 1

Page	Revision		Page	Revision
10.1-1	1		10 3-42	1
10.1-2	1		10.3-43	1
10.1-3	1		Fig. 10.3.1a	1
10.1-4	1		Fig. 10.3.1b	1
10.1-5	1		Fig. 10.3.1c	1
10.1-6	1		Fig. 10.3.1d	1
10.1-7	1		Fig. 10.3.1e	1
10.1-8	1		10.4-1	1
Fig. 10.1.1	1		10.4-2	1
10.2-1	1		10.4-3	1
10.3-1	1		10.4-4	1
10.3-2	1		10.4-5	1
10.3-3	1		10.5-1	0
10.3-4	1			
10.3-5	1			
10.3-6	1			
10.3-7	1			
10.3-8	1			
10.3-9	1			
10.3-10	1			
10.3-11	1			
10.3-12	1			
10.3-13	1			
10.3-14	1			
10.3-15	1			
10.3-16	1			
10.3-17	1			
10.3-18	1			
10.3-19	1			
10.3-20	1			
10.3-21	1			
10.3-22	1			
10.3-23	1			
10.3-24	1			
10.3-25	1			
10.3-26	1			
10.3-27	1			
10.3-28	1			
10.3-29	1			
10.3-30	1			
10.3-31	1			
10.3-32	1			
10.3-33	1			
10.3-34	1			
10.3-35	1			
10.3-36	1			
10.3-37	1			
10.3-38	1			
10.3-39	1			
10.3-40	1			
10.3-41	1			

LIST OF EFFECTIVE PAGES FOR HI-STORM 100 FSAR REVISION 1

Page	Revision		Page	Revision
11.1-1	1		11.2-37	1
11.1-2	1		11.2-38	1
11.1-3	1		11.2-39	1
11.1-4	1		11.2-40	1
11.1-5	1		11.2-41	1
11.1-6	1		11.2-42	1
11.1-7	1		11.2-43	1
11.1-8	1		11.2-44	1
11.1-9	1		11.2-45	1
11.1-10	1		11.2-46	1
11.1-11	1		11.2-47	1
11.1-12	1		11.2-48	1
11.1-13	1		11.2-49	1
11.1-14	1		11.2-50	1
11.1-15	1		Fig. 11.2.1	0
11.1-16	1		Fig. 11.2.2	0
11.2-1	1		Fig. 11.2.3	0
11.2-2	1		Fig 11.2.4	0
11.2-3	1		Fig 11.2.5	0
11.2-4	1		Fig. 11.2.6	1
11.2-5	1		Fig 11.2.7	0
11.2-6	1		Fig. 11.2.8	Deleted
11.2-7	1		11.3-1	1
11.2-8	1			
11.2-9	1			
11.2-10	1			
11.2-11	1			
11.2-12	1			
11.2-13	1			
11.2-14	1			
11.2-15	1			
11.2-16	1			
11.2-17	1			
11.2-18	1			
11.2-19	1			
11.2-20	1			
11.2-21	1			
11.2-22	1			
11.2-23	1			
11.2-24	1			
11.2-25	1			
11.2-26	1			
11.2-27	1			
11.2-28	1			
11.2-29	1			
11.2-30	1			
11.2-31	1			
11.2-32	1			
11.2-33	1			
11.2-34	1			
11.2-35	1			
11 2-36	1			

LIST OF EFFECTIVE PAGES FOR HI-STORM 100 FSAR REVISION 1

Page	Revision		Page	Revision
12.0-1	0		B 3 3.1-1	1
12.1-1	1		B 3.3.1-2	1
12.1-2	1		B 3.3.1-3	1
12.1-3	1		B 3.3.1-4	1
12.2-1	1		B 3.3.1-5	1
12.2-2	1		Appendix 12.B Cover	0
12.2-3	1		Comment Resolution Letters	0
12.2-4	1		21 Pages	
12.2-5	Deleted			
12.3-1	0			
12.4-1	0			
12.5-1	0			
Appendix 12.A Cover	1			
TS Bases TOC	1			
B 3.0-1	0			
B 3.0-2	0			
B 3.0-3	0			
B 3.0-4	0			
B 3.0-5	0			
B 3.0-6	0			
B 3.0-7	0			
B 3.0-8	0			
B 3.0-9	0			
B 3.1.1-1	1			
B 3.1.1-2	1			
B 3.1.1-3	1			
B 3.1.1-4	1			
B 3.1.1-5	1			
B 3.1.1-6	1			
B 3.1.1-7	1			
B 3.1.2-1	1			
B 3.1.2-2	1			
B 3.1.2-3	1			
B 3.1.2-4	1			
B 3.1.2-5	1			
B 3.1.2-6	1			
B 3.1.2-7	1			
B 3.1.3-1	1			
B 3.1.3-2	1			
B 3.1.3-3	1			
B 3.1.3-4	1			
B 3.1.3-5	1			
B 3.2.1-1	1			
B 3.2.1-2	1			
B 3.2.1-3	1			
B 3.2.2-1	1			
B 3 2 2-2	1			
B 3.2 2-3	1			
B 3.2.3-1	1			
B 3.2.3-2	1			
B 3.2.3-3	1			

LIST OF EFFECTIVE PAGES FOR HI-STORM 100 FSAR REVISION 1

Page	Revision		Page	Revision
13 0-1	0			
13 1-1	0			
13.1-2	0			
13.2-1	0			
13.3-1	1			
13.3-2	1			
13.3-3	1			
13 3-4	1			
13 3-5	1			
13.3-6	1			
13.3-7	1			
13.3-8	1			
13.3-9	1			
13.3-10	1			
13.3-11	1			
13.3-12	1			
13.3-13	1			
13.3-14	1			
13.3-15	1			
13.3-16	1			
13.3-17	1			
13.3-18	Deleted			
13.4-1	1			
13.5-1	0			
13 5-2	0			
13.6-1	0			
Appendix 13.A	Deleted			
Appendix 13.B	Deleted			

CHAPTER 1†: GENERAL DESCRIPTION

1.0 GENERAL INFORMATION

This Final Safety Analysis Report (FSAR) for Holtec International's HI-STORM 100 System is a compilation of information and analyses to support a United States Nuclear Regulatory Commission (NRC) licensing review as a spent nuclear fuel (SNF) dry storage cask under requirements specified in 10CFR72 [1.0.1]. This FSAR describes the basis for NRC approval and issuance of a Certificate of Compliance (C of C) for storage under provisions of 10CFR72, Subpart L, for the HI-STORM 100 System to safely store spent nuclear fuel (SNF) at an Independent Spent Fuel Storage Installation (ISFSI). This report has been prepared in the format and content suggested in NRC Regulatory Guide 3.61 [1.0.2] and NUREG-1536 Standard Review Plan for Dry Cask Storage Systems [1.0.3] to facilitate the NRC review process.

The purpose of this chapter is to provide a general description of the design features and storage capabilities of the HI-STORM 100 System, drawings of the structures, systems, and components important to safety, and the qualifications of the certificate holder. This report is also suitable for incorporation into a site-specific Safety Analysis Report which may be submitted by an applicant for a site-specific 10 CFR 72 license to store SNF at an ISFSI or a facility similar in objective and scope. Table 1.0.1 contains a listing of the terminology and notation used in this FSAR.

To aid NRC review, additional tables and references have been added to facilitate the location of information requested by NUREG-1536. Table 1.0.2 provides a matrix of the topics in NUREG-1536 and Regulatory Guide 3.61, the corresponding 10CFR72 requirements, and a reference to the applicable FSAR section that addresses each topic.

The HI-STORM 100 FSAR is in full compliance with the intent of all regulatory requirements listed in Section III of each chapter of NUREG-1536. However, an exhaustive review of the provisions in NUREG-1536, particularly Section IV (Acceptance Criteria) and Section V (Review Procedures) has identified certain deviations from a verbatim compliance to all guidance. A list of all such items, along with a discussion of their intent and Holtec International's approach for compliance with the underlying intent is presented in Table 1.0.3 herein. Table 1.0.3 also contains the justification for the alternative method for compliance adopted in this FSAR. The justification may be in the form of a supporting analysis, established industry practice, or other NRC guidance documents. Each chapter in this FSAR provides a clear statement with respect to the extent of compliance to the NUREG-1536 provisions. Chapter 1 is in full compliance with NUREG-1536; no exceptions are taken.

---

† This chapter has been prepared in the format and section organization set forth in Regulatory Guide 3.61. However, the material content of this chapter also fulfills the requirements of NUREG-1536 Pagination and numbering of sections, figures, and tables are consistent with the convention set down in Chapter 1, Section 1.0, herein Finally, all terms-of-art used in this chapter are consistent with the terminology of the glossary (Table 1.0 1) and component nomenclature of the Bill-of-Materials (Section 1.5).

The generic design basis and the corresponding safety analysis of the HI-STORM 100 System contained in this FSAR are intended to bound the SNF characteristics, design, conditions, and interfaces that exist in the vast majority of domestic power reactor sites and potential away-from-reactor storage sites in the contiguous United States. This FSAR also provides the basis for component fabrication and acceptance, and the requirements for safe operation and maintenance of the components, consistent with the design basis and safety analysis documented herein. In accordance with 10CFR72, Subpart K, site-specific implementation of the generically certified HI-STORM 100 System requires that the licensee perform a site-specific evaluation, as defined in 10CFR72.212. The HI-STORM 100 System FSAR identifies a limited number of conditions that are necessarily site-specific and are to be addressed in the licensee's 10CFR72.212 evaluation. These include:

- Siting of the ISFSI and design of the storage pad (including the embedment for anchored cask users) and security system. Site-specific demonstration of compliance with regulatory dose limits. Implementation of a site-specific ALARA program.

- An evaluation of site-specific hazards and design conditions that may exist at the ISFSI site or the transfer route between the plant's cask receiving bay and the ISFSI. These include, but are not limited to, explosion and fire hazards, flooding conditions, land slides, and lightning protection.

- Determination that the physical and nucleonic characteristics and the condition of the SNF assemblies to be dry stored meet the fuel acceptance requirements of the Certificate of Compliance.

- An evaluation of interface and design conditions that exist within the plant's fuel building in which canister fuel loading, canister closure, and canister transfer operations are to be conducted in accordance with the applicable 10CFR50 requirements and technical specifications for the plant.

- Detailed site-specific operating, maintenance, and inspection procedures prepared in accordance with the generic procedures and requirements provided in Chapters 8 and 9, and the technical specifications provided in the Certificate of Compliance.

- Performance of pre-operational testing.

- Implementation of a safeguards and accountability program in accordance with 10CFR73. Preparation of a physical security plan in accordance with 10CFR73.55.

- Review of the reactor emergency plan, quality assurance (QA) program, training program, and radiation protection program.

The generic safety analyses contained in the HI-STORM 100 FSAR may be used as input and for guidance by the licensee in performing a 10CFR72.212 evaluation.

Within this report, all figures, tables and references cited are identified by the double decimal system m.n.i, where m is the chapter number, n is the section number, and i is the sequential number. Thus, for example, Figure 1.2.3 is the third figure in Section 1.2 of Chapter 1.

Revisions to this document are made on a section level basis. Complete sections have been replaced if any material in the section changed. The specific changes are noted with revision bars in the right margin. Figures are revised individually. Drawings are controlled separately within the Holtec QA program and have individual revision numbers. Bills-of-Material (BOMs) are considered separate drawings and are not necessarily at the same revision level as the drawing(s) to which they apply. If a drawing or BOM was revised in support of the current FSAR revision, that drawing/BOM is included in Section 1.5 at its latest revision level. Drawings and BOMs appearing in this FSAR may be revised between formal updates to the FSAR. Therefore, the revisions of drawings/BOMs in Section 1.5 may not be current.

1.0.1 Engineering Change Orders

The changes authorized by the following Holtec Engineering Change Orders (ECOs) are reflected in Revision 1 of this FSAR:

MPC-68/68F/68FF: ECOs 1021-1 through 4, 7, 8, 12 through 16, 18 through 23, 27 through 30, 33, 34, 36, 38, 39, 41, 43, and 44; and 71188-43.

MPC-24/24E/24EF: ECOs 1022- 1 through 7, 9, 10, 12 through 26, 28, 31, and 34 through 38.

MPC-32: ECOs 1023-1 and 3 through 10.

HI-STORM overpack: ECOs 1024-1 through 4, 6 through 16, 18 through 21, 24, 25, 27 through 38, 42 through 47, 50, 51, 52, 54 through 58, and 60.

HI-TRAC 125 transfer cask: ECOs 1025-1 through 32, 35, and 36.

HI-TRAC 100 transfer cask: ECOs 1026- 1 through 29.

Ancillary Equipment: ECOs 1027-27, 31, 33, 46, and 53.

General FSAR changes: ECOs 5014-36, 47, 49, 50, 51, 53, 54, 56, 58 through 64, 66, 67, and 68.

Table 1.0.1

TERMINOLOGY AND NOTATION

ALARA is an acronym for As Low As Reasonably Achievable.

Boral is a generic term to denote an aluminum-boron carbide cermet manufactured in accordance with U.S. Patent No. 4027377. The individual material supplier may use another trade name to refer to the same product.

Boral™ means Boral manufactured by AAR Advanced Structures.

BWR is an acronym for boiling water reactor.

C.G. is an acronym for center of gravity.

Confinement Boundary means the outline formed by the sealed, cylindrical enclosure of the Multi-Purpose Canister (MPC) shell welded to a solid baseplate, a lid welded around the top circumference of the shell wall, the port cover plates welded to the lid, and the closure ring welded to the lid and MPC shell providing the redundant sealing.

Confinement System means the Multi-Purpose Canister (MPC) which encloses and confines the spent nuclear fuel during storage.

Controlled Area means that area immediately surrounding an ISFSI for which the owner/user exercises authority over its use and within which operations are performed.

Cooling Time for a spent fuel assembly is the time between its discharge from the reactor (reactor shutdown) and the time the spent fuel assembly is loaded into the MPC.

DBE means Design Basis Earthquake.

DCSS is an acronym for Dry Cask Storage System.

Damaged Fuel Assembly is a fuel assembly with known or suspected cladding defects, as determined by review of records, greater than pinhole leaks or hairline cracks, empty fuel rod locations that are not replaced with dummy fuel rods, or those that cannot be handled by normal means. Fuel assemblies that cannot be handled by normal means due to fuel cladding damage are considered fuel debris.

Table 1.0.1

TERMINOLOGY AND NOTATION

Damaged Fuel Container (or Canister) means a specially designed enclosure for damaged fuel or fuel debris which permits gaseous and liquid media to escape while minimizing dispersal of gross particulates. The Damaged Fuel Container/Canister (DFC) features a lifting location which is suitable for remote handling of a loaded or unloaded DFC.

Design Life is the minimum duration for which the component is engineered to perform its intended function set forth in this FSAR, if operated and maintained in accordance with this FSAR.

Design Report is a document prepared, reviewed and QA validated in accordance with the provisions of 10CFR72 Subpart G. The Design Report shall demonstrate compliance with the requirements set forth in the Design Specification. A Design Report is mandatory for systems, structures, and components designated as Important to Safety.

Design Specification is a document prepared in accordance with the quality assurance requirements of 10CFR72 Subpart G to provide a complete set of design criteria and functional requirements for a system, structure, or component, designated as Important to Safety, intended to be used in the operation, implementation, or decommissioning of the HI-STORM 100 System.

Enclosure Vessel means the pressure vessel defined by the cylindrical shell, baseplate, port cover plates, lid, and closure ring which provides confinement for the helium gas contained within the MPC. The Enclosure Vessel (EV) and the fuel basket together constitute the multi-purpose canister.

Fracture Toughness is a property which is a measure of the ability of a material to limit crack propagation under a suddenly applied load.

Fuel Basket means a honeycombed structural weldment with square openings which can accept a fuel assembly of the type for which it is designed.

Fuel Debris refers to ruptured fuel rods, severed rods, loose fuel pellets, or fuel assemblies with known or suspected defects which cannot be handled by normal means due to fuel cladding damage.

High Burnup Fuel is a spent fuel assembly with an average burnup greater than 45,000 MWD/MTU.

HI-TRAC transfer cask or HI-TRAC means the transfer cask used to house the MPC during MPC fuel loading, unloading, drying, sealing, and on-site transfer operations to a HI-STORM storage overpack or HI-STAR storage/transportation overpack. The HI-TRAC shields the loaded MPC allowing loading operations to be performed while limiting radiation exposure to personnel. HI-TRAC is an acronym for Holtec International Transfer Cask. In this FSAR there are three HI-TRAC transfer casks, the 125 ton standard design HI-TRAC (HI-TRAC-125), the 125-ton dual-purpose lid design (HI-TRAC 125D), and the 100 ton HI-TRAC (HI-TRAC-100). The 100 ton HI-TRAC is provided for use at sites with a maximum crane capacity of less than 125 tons. The term HI-TRAC is used as a generic term to refer to all

three HI-TRAC transfer cask design, unless the discussion . The HI-TRAC is equipped with a pair of lifting trunnions and the HI-TRAC 100 and HI-TRAC 125 designs also include pocket trunnions. The trunnions are used to lift and downend/upend the HI-TRAC with a loaded MPC.

HI-STORM overpack or storage overpack means the cask that receives and contains the sealed multi-purpose canisters containing spent nuclear fuel. It provides the gamma and neutron shielding, ventilation passages, missile protection, and protection against natural phenomena and accidents for the MPC. The term "overpack" as used in this FSAR refers to both the standard design overpack (HI-STORM 100), the alternate design overpack (HI-STORM 100S), and either of these as an overpack designed for high seismic deployment (HI-STORM 100A or HI-STORM 100SA), unless otherwise clarified.

HI-STORM 100 System consists of a loaded MPC placed within the HI-STORM 100 overpack.

Holtite^{TM} is the trade name for all present and future neutron shielding materials formulated under Holtec International's R&D program dedicated to developing shielding materials for application in dry storage and transport systems. The Holtite development program is an ongoing experimentation effort to identify neutron shielding materials with enhanced shielding and temperature tolerance characteristics. Holtite-A™ is the first and only shielding material qualified under the Holtite R&D program. As such, the terms Holtite and Holtite-A may be used interchangeably throughout this FSAR.

Holtite™-A is a trademarked Holtec International neutron shield material.

Important to Safety (ITS) means a function or condition required to store spent nuclear fuel safely; to prevent damage to spent nuclear fuel during handling and storage, and to provide reasonable assurance that spent nuclear fuel can be received, handled, packaged, stored, and retrieved without undue risk to the health and safety of the public.

Independent Spent Fuel Storage Installation (ISFSI) means a facility designed, constructed, and licensed for the interim storage of spent nuclear fuel and other radioactive materials associated with spent fuel storage in accordance with 10CFR72.

Intact Fuel Assembly is defined as a fuel assembly without known or suspected cladding defects greater than pinhole leaks and hairline cracks, and which can be handled by normal means. Fuel assemblies without fuel rods in fuel rod locations shall not be classified as Intact Fuel Assemblies unless dummy fuel rods are used to displace an amount of water greater than or equal to that displaced by the fuel rod(s).

License Life means the duration for which the system is authorized by virtue of its certification by the U.S. NRC.

Lowest Service Temperature (LST) is the minimum metal temperature of a part for the specified service condition.

Maximum Reactivity means the highest possible k-effective including bias, uncertainties, and calculational statistics evaluated for the worst-case combination of fuel basket manufacturing tolerances.

METCON™ is a trade name for the HI-STORM 100 overpack. The trademark is derived from the metal-concrete composition of the HI-STORM 100 overpack.

MGDS is an acronym for Mined Geological Disposal System.

Moderate Burnup Fuel is a spent fuel assembly with an average burnup less than or equal to 45,000 MWD/MTU.

Multi-Purpose Canister (MPC) means the sealed canister which consists of a honeycombed fuel basket for spent nuclear fuel storage, contained in a cylindrical canister shell which is welded to a baseplate, lid with welded port cover plates, and closure ring. MPC is an acronym for multi-purpose canister. There are different MPCs with different fuel basket geometries for storing PWR or BWR fuel, but all MPCs have identical exterior dimensions. The MPC is the confinement boundary for storage conditions.

NDT is an acronym for Nil Ductility Transition Temperature, which is defined as the temperature at which the fracture stress in a material with a small flaw is equal to the yield stress in the same material if it had no flaws.

Neutron Shielding means a material used to thermalize and capture neutrons emanating from the radioactive spent nuclear fuel.

Non-Fuel Hardware is defined as Burnable Poison Rod Assemblies (BPRAs), Thimble Plug Devices (TPDs), Control Rod Assemblies (CRAs), Axial Power Shaping Rods (APSRs), Wet Annular Burnable Absorbers (WABAs), Rod Cluster Control Assemblies (RCCAs), water displacement guide tube plugs, and orifice rod assemblies.

Planar-Average Initial Enrichment is the average of the distributed fuel rod initial enrichments within a given axial plane of the assembly lattice.

Plain Concrete is concrete that is unreinforced and is of density specified in this FSAR.

Preferential Fuel Loading is a requirement in the CoC applicable to uniform fuel loading whenever fuel assemblies with significantly different post-irradiation cooling times ($\geq$ 1 year) are to be loaded in the same MPC. Fuel assemblies with the longest post-irradiation cooling time are loaded into fuel storage locations at

the periphery of the basket. Fuel assemblies with shorter post-irradiation cooling times are placed toward the center of the basket. Regionalized fuel loading meets the intent of preferential fuel loading. Preferential fuel loading is a requirement in addition to other restrictions in the CoC such as those for non-fuel hardware and damaged fuel containers.

Post-Core Decay Time (PCDT) is synonymous with cooling time.

PWR is an acronym for pressurized water reactor.

Reactivity is used synonymously with effective neutron multiplication factor or k-effective.

Regionalized Fuel Loading is a term used to describe an optional fuel loading strategy used in lieu of uniform fuel loading. Regionalized fuel loading allows high heat emitting fuel assemblies to be stored in fuel storage locations in the center of the fuel basket provided lower heat emitting fuel assemblies are stored in the peripheral fuel storage locations. Users choosing regionalized fuel loading must also consider other restrictions in the CoC such as those for non-fuel hardware and damaged fuel containers. Regionalized fuel loading meets the intent of preferential fuel loading.

SAR is an acronym for Safety Analysis Report (10CFR71).

Service Life means the duration for which the component is reasonably expected to perform its intended function, if operated and maintained in accordance with the provisions of this FSAR. Service Life may be much longer than the Design Life because of the conservatism inherent in the codes, standards, and procedures used to design, fabricate, operate, and maintain the component.

Single Failure Proof means that the handling system is designed so that all directly loaded tension and compression members are engineered to satisfy the enhanced safety criteria of Paragraphs 5.1.6(1)(a) and (b) of NUREG-0612.

SNF is an acronym for spent nuclear fuel.

SSC is an acronym for Structures, Systems and Components.

STP is Standard Temperature and Pressure conditions.

Thermosiphon is the term used to describe the buoyancy-driven natural convection circulation of helium within the MPC fuel basket.

FSAR is an acronym for Final Safety Analysis Report (10CFR72).

Table 1.0.2

HI-STORM 100 SYSTEM FSAR REGULATORY COMPLIANCE
CROSS REFERENCE MATRIX

Uniform Fuel Loading is a fuel loading strategy where any authorized fuel assembly may be stored in any fuel storage location, subject to other restrictions in the CoC, such as preferential fuel loading, and those applicable to non-fuel hardware, and damaged fuel containers.

ZPA is an acronym for zero period acceleration.

Table 1.0.2

HI-STORM 100 SYSTEM FSAR REGULATORY COMPLIANCE
CROSS REFERENCE MATRIX

Regulatory Guide 3.61 Section and Content	Associated NUREG-1536 Review Criteria	Applicable 10CFR72 or 10CFR20 Requirement	HI-STORM FSAR
1. General Description			
1.1 Introduction	1.III.1 General Description & Operational Features	10CFR72.24(b)	1 1
1.2 General Description	1.III.1 General Description & Operational Features	10CFR72.24(b)	1.2
1.2.1 Cask Character-istics	1.III.1 General Description & Operational Features	10CFR72.24(b)	1.2.1
1.2.2 Operational Features	1.III.1 General Description & Operational Features	10CFR72.24(b)	1.2.2
1.2.3 Cask Contents	1.III.3 DCSS Contents	10CFR72.2(a)(1) 10CFR72.236(a)	1.2.3
1.3 Identification of Agents & Contractors	1.III.4 Qualification of the Applicant	10CFR72.24(j) 10CFR72.28(a)	1.3
1.4 Generic Cask Arrays	1.III.1 General Description & Operational Features	10CFR72.24(c)(3)	1.4
1.5 Supplemental Data	1.III.2 Drawings	10CFR72.24(c)(3)	1.5
NA	1.III.6 Consideration of Transport Requirements	10CFR72.230(b) 10CFR72.236(m)	1.1
NA	1.III.5 Quality Assurance	10CFR72.24(n)	1.3
2. Principal Design Criteria			
2.1 Spent Fuel To Be Stored	2.III.2.a Spent Fuel Specifications	10CFR72.2(a)(1) 10CFR72.236(a)	2.1
2.2 Design Criteria for Environmental Conditions and Natural Phenomena	2.III.2.b External Conditions, 2.III.3.b Structural, 2.III.3.c Thermal	10CFR72.122(b)	2.2
		10CFR72.122(c)	2 2.3.3, 2.2.3.10
		10CFR72.122(b)(1)	2.2
		10CFR72.122(b)(2)	2.2.3.11
		10CFR72.122(h)(1)	2.0

Table 1.0.2 (continued)

HI-STORM 100 SYSTEM FSAR REGULATORY COMPLIANCE CROSS REFERENCE MATRIX

Regulatory Guide 3.61 Section and Content	Associated NUREG-1536 Review Criteria	Applicable 10CFR72 or 10CFR20 Requirement	HI-STORM FSAR
2.2.1 Tornado and Wind Loading	2.III.2.b External Conditions	10CFR72.122(b)(2)	2.2.3.5
2.2.2 Water Level (Flood)	2.III.2.b External Conditions 2.III.3.b Structural	10CFR72.122(b)(2)	2.2.3.6
2.2.3 Seismic	2.III.3.b Structural	10CFR72.102(f) 10CFR72.122(b)(2)	2.2.3.7
2.2.4 Snow and Ice	2.III.2.b External Conditions 2.III.3.b Structural	10CFR72.122(b)	2.2.1.6
2.2.5 Combined Load	2.III.3.b Structural	10CFR72.24(d) 10CFR72.122(b)(2)(ii)	2.2.7
NA	2.III.1 Structures, Systems, and Components Important to Safety	10CFR72.122(a) 10CFR72.24(c)(3)	2.2.4
NA	2.III.2 Design Criteria for Safety Protection Systems	10CFR72.236(g) 10CFR72.24(c)(1) 10CFR72.24(c)(2) 10CFR72.24(c)(4) 10CFR72.120(a) 10CFR72.236(b)	2.0, 2.2
NA	2.III.3.c Thermal	10CFR72.128(a)(4)	2.3.2.2, 4.0
NA	2.III.3f Operating Procedures	10CFR72.24(f) 10CFR72.128(a)(5)	10.0, 8.0
		10CFR72.236(h)	8.0
		10CFR72.24(1)(2)	1.2.1, 1.2.2
		10CFR72.236(1)	2 3.2.1
		10CFR72.24(e) 10CFR72.104(b)	10.0, 8.0
	2.III.3.g Acceptance Tests & Maintenance	10CFR72.122(1) 10CFR72.236(g) 10CFR72.122(f) 10CFR72.128(a)(1)	9.0

Table 1.0.2 (continued)

HI-STORM 100 SYSTEM FSAR REGULATORY COMPLIANCE CROSS REFERENCE MATRIX

Regulatory Guide 3.61 Section and Content	Associated NUREG-1536 Review Criteria	Applicable 10CFR72 or 10CFR20 Requirement	HI-STORM FSAR
2.3 Safety Protection Systems	--	--	2.3
2.3.1 General	--	--	2.3
2.3.2 Protection by Multiple Confinement Barriers and Systems	2.III.3.b Structural	10CFR72.236(1)	2.3.2.1
	2.III.3.c Thermal	10CFR72.236(f)	2.3.2.2
	2.III.3.d Shielding/ Confinement/ Radiation Protection	10CFR72.126(a) 10CFR72.128(a)(2)	2.3.5.2
		10CFR72.128(a)(3)	2.3.2.1
		10CFR72.236(d)	2.3.2.1, 2.3.5.2
		10CFR72.236(e)	2.3.2.1
2.3.3 Protection by Equipment & Instrument Selection	2.III.3.d Shielding/ Confinement/ Radiation Protection	10CFR72.122(h)(4) 10CFR72.122(i) 10CFR72.128(a)(1)	2.3.5
2.3.4 Nuclear Criticality Safety	2.III.3.e Criticality	10CFR72.124(a) 10CFR72.236(c) 10CFR72.124(b)	2.3.4, 6.0
2.3.5 Radiological Protection	2.III.3.d Shielding/ Confinement/ Radiation Protection	10CFR72.24(d) 10CFR72.104(a) 10CFR72.236(d)	10.4.1
		10CFR72.24(d) 10CFR72.106(b) 10CFR72.236(d)	10.4.2
		10CFR72 24(m)	2.3.2.1
2.3.6 Fire and Explosion Protection	2.III.3.b Structural	10CFR72.122(c)	2.3.6, 2.2.3.10
2.4 Decommissioning Considerations	2 III.3.h Decommissioning	10CFR72.24(f) 10CFR72.130 10CFR72.236(h)	2.4
	14.III.1 Design	10CFR72.130	2.4

Table 1.0.2 (continued)

HI-STORM 100 SYSTEM FSAR REGULATORY COMPLIANCE CROSS REFERENCE MATRIX

Regulatory Guide 3.61 Section and Content	Associated NUREG-1536 Review Criteria	Applicable 10CFR72 or 10CFR20 Requirement	HI-STORM FSAR
	14.III.2 Cask Decontamination	10CFR72.236(i)	2.4
	14.III.3 Financial Assurance & Record Keeping	10CFR72.30	(1)
	14.III.4 License Termination	10CFR72.54	(1)
3. Structural Evaluation			
3.1 Structural Design	3.III.1 SSC Important to Safety	10CFR72.24(c)(3) 10CFR72.24(c)(4)	3.1
	3.III.6 Concrete Structures	10CFR72.24(c)	3.1
3.2 Weights and Centers of Gravity	3.V.1.b.2 Structural Design Features	--	3.2
3.3 Mechanical Properties of Materials	3.V.1.c Structural Materials	10CFR72.24(c)(3)	3.3
	3.V.2.c Structural Materials		
NA	3.III.2 Radiation Shielding, Confinement, and Subcriticality	10CFR72.24(d) 10CFR72.124(a) 10CFR72.236(c) 10CFR72.236(d) 10CFR72.236(1)	3.4.4.3 3.4.7.3 3.4.10
NA	3.III.3 Ready Retrieval	10CFR72.122(f) 10CFR72.122(h) 10CFR72.122(l)	3.4.4.3
NA	3.III.4 Design-Basis Earthquake	10CFR72.24(c) 10CFR72.102(f)	3.4.7
NA	3.III.5 20 Year Minimum Design Length	10CFR72.24(c) 10CFR72.236(g)	3.4.11 3.4.12
3.4 General Standards for Casks	--	--	3.4
3.4.1 Chemical and Galvanic Reactions	3.V.1.b.2 Structural Design Features	--	3.4.1
3.4.2 Positive Closure	--	--	3.4.2

Table 1.0.2 (continued)

HI-STORM 100 SYSTEM FSAR REGULATORY COMPLIANCE CROSS REFERENCE MATRIX

Regulatory Guide 3.61 Section and Content	Associated NUREG-1536 Review Criteria	Applicable 10CFR72 or 10CFR20 Requirement	HI-STORM FSAR
3.4.3 Lifting Devices	3.V.1.ii(4)(a) Trunnions --	--	3.4.3, Appendices 3.E, 3.AC, 3.D
3.4.4 Heat	3.V.1.d Structural Analysis	10CFR72.24(d) 10CFR72.122(b)	3.4.4, Appendices 3.I, 3.U, 3.V, 3.W
3.4.5 Cold	3.V.1.d Structural Analysis	10CFR72.24(d) 10CFR72.122(b)	3.4.5
3.5 Fuel Rods	--	10CFR72.122(h)(1)	3.5
4. Thermal Evaluation			
4.1 Discussion	4.III Regulatory Requirements	10CFR72.24(c)(3) 10CFR72.128(a)(4) 10CFR72.236(f) 10CFR72.236(h)	4.1
4.2 Summary of Thermal Properties of Materials	4.V.4.b Material Properties	--	4.2
4.3 Specifications for Components	4.IV Acceptance Criteria	10CFR72.122(h)(1)	4.3
4.4 Thermal Evaluation for Normal Conditions of Storage	4.IV Acceptance Criteria	10CFR72.24(d) 10CFR72.236(g)	4.4, 4.5
NA	4.IV Acceptance Criteria	10CFR72.24(d) 10CFR72.122(c)	11.1, 11.2
4.5 Supplemental Data	4.V.6 Supplemental Info.	--	--
5. Shielding Evaluation			
5.1 Discussion and Results	--	10CFR72.104(a) 10CFR72.106(b)	5.1
5.2 Source Specification	5.V.2 Radiation Source Definition	--	5.2
5.2.1 Gamma Source	5.V.2.a Gamma Source	--	5.2.1, 5 2 3

Table 1.0.2 (continued)

HI-STORM 100 SYSTEM FSAR REGULATORY COMPLIANCE CROSS REFERENCE MATRIX

Regulatory Guide 3.61 Section and Content	Associated NUREG-1536 Review Criteria	Applicable 10CFR72 or 10CFR20 Requirement	HI-STORM FSAR
5.2.2 Neutron Source	5.V.2.b Neutron Source	--	5.2.2, 5.2.3
5.3 Model Specification	5.V.3 Shielding Model Specification	--	5.3
5.3.1 Description of the Radial and Axial Shielding Configurations	5.V.3.a Configuration of the Shielding and Source	10CFR72.24(c)(3)	5.3.1
5.3.2 Shield Regional Densities	5.V.3.b Material Properties	10CFR72.24(c)(3)	5.3.2
5.4 Shielding Evaluation	5.V.4 Shielding Analysis	10CFR72.24(d) 10CFR72.104(a) 10CFR72.106(b) 10CFR72.128(a)(2) 10CFR72.236(d)	5.4
5.5 Supplemental Data	5.V.5 Supplemental Info	--	Appendices 5.A, 5.B, and 5.C
6. Criticality Evaluation			
6.1 Discussion and Results	--	--	6.1
6.2 Spent Fuel Loading	6.V.2 Fuel Specification	--	6.1, 6.2
6.3 Model Specifications	6.V.3 Model Specification	--	6.3
6.3.1 Description of Calculational Model	6.V.3.a Configuration	-- 10CFR72.124(b) 10CFR72.24(c)(3)	6.3 1

Table 1.0.2 (continued)

HI-STORM 100 SYSTEM FSAR REGULATORY COMPLIANCE CROSS REFERENCE MATRIX

Regulatory Guide 3.61 Section and Content	Associated NUREG-1536 Review Criteria	Applicable 10CFR72 or 10CFR20 Requirement	HI-STORM FSAR
6.3.2 Cask Regional Densities	6.V.3.b Material Properties	10CFR72.24(c)(3) 10CFR72.124(b) 10CFR72.236(g)	6.3.2
6.4 Criticality Calculations	6.V.4 Criticality Analysis	10CFR72.124	6 4
6.4.1 Calculational or Experimental Method	6.V.4.a Computer Programs and 6.V.4.b Multiplication Factor	10CFR72.124	6.4.1
6.4.2 Fuel Loading or Other Contents Loading Optimization	6.V.3.a Configuration	--	6.4.2
6.4.3 Criticality Results	6.IV Acceptance Criteria	10CFR72.24(d) 10CFR72.124 10CFR72.236(c)	6.1, 6.2, 6.3.1, 6.3.2
6.5 Critical Benchmark Experiments	6.V.4.c Benchmark Comparisons	--	6.5, Appendix 6.A, 6.4.3
6.6 Supplemental Data	6.V.5 Supplemental Info.	--	Appendices 6.B,6.C, and 6.D
7. Confinement			
7.1 Confinement Boundary	7.III.1 Description of Structures, Systems and Components Important to Safety	10CFR72.24(c)(3) 10CFR72.24(1)	7.0, 7.1
7.1.1 Confinement Vessel	7.III.2 Protection of Spent Fuel Cladding	10CFR72.122(h)(l)	7.1, 7.1.1, 7.2.2
7 1 2 Confinement Penetrations	--	--	7.1.2
7.1.3 Seals and Welds	--	--	7.1.3

Table 1.0.2 (continued)

HI-STORM 100 SYSTEM FSAR REGULATORY COMPLIANCE CROSS REFERENCE MATRIX

Regulatory Guide 3.61 Section and Content	Associated NUREG-1536 Review Criteria	Applicable 10CFR72 or 10CFR20 Requirement	HI-STORM FSAR
7.1.4 Closure	7.III.3 Redundant Sealing	10CFR72.236(e)	7.1.1, 7.1.4
7.2 Requirements for Normal Conditions of Storage	7.III.7 Evaluation of Confinement System	10CFR72.24(d) 10CFR72.236(1)	7.2
7.2.1 Release of Radioactive Material	7.III.6 Release of Nuclides to the Environment	10CFR72.24(1)(1)	7.2.1
	7.III.4 Monitoring of Confinement System	10CFR72.122(h)(4) 10CFR72.128(a)(l)	7.1.4
	7.III.5 Instrumentation	10CFR72.24(l) 10CFR72.122(i)	7.1.4
	7.III.8 Annual Dose	10CFR72.104(a)	7.3.5
7.2.2 Pressurization of Confinement Vessel	--	--	7.2.2
7.3 Confinement Requirements for Hypothetical Accident Conditions	7.III.7 Evaluation of Confinement System	10CFR72.24(d) 10CFR72.122(b) 10CFR72.236(l)	7.3
7.3.1 Fission Gas Products	--	--	7.3.1
7.3.2 Release of Contents	--	--	7.3.3
NA	--	10CFR72.106(b)	7.3

Table 1.0.2 (continued)

HI-STORM 100 SYSTEM FSAR REGULATORY COMPLIANCE CROSS REFERENCE MATRIX

Regulatory Guide 3.61 Section and Content	Associated NUREG-1536 Review Criteria	Applicable 10CFR72 or 10CFR20 Requirement	HI-STORM FSAR
7.4 Supplemental Data	7.V Supplemental Info.	--	--
8. Operating Procedures			
8.1 Procedures for Loading the Cask	8.III.1 Develop Operating Procedures	10CFR72.40(a)(5)	8 1 to 8.5
	8.III.2 Operational Restrictions for ALARA	10CFR72.24(e) 10CFR72.104(b)	8.1.5
	8.III.3 Radioactive Effluent Control	10CFR72.24(1)(2)	8.1.5, 8.5.2
	8.III.4 Written Procedures	10CFR72.212(b)(9)	8.0
	8.III.5 Establish Written Procedures and Tests	10CFR72.234(f)	8.0 Introduction
	8.III.6 Wet or Dry Loading and Unloading Compatibility	10CFR72.236(h)	8.0 Introduction
	8.III.7 Cask Design to Facilitate Decon	10CFR72.236(i)	8.1, 8.3
8.2 Procedures for Unloading the Cask	8.III.1 Develop Operating Procedures	10CFR72.40(a)(5)	8.3
	8.III.2 Operational Restrictions for ALARA	10CFR72 24(e) 10CFR72.104(b)	8.3
	8.III.3 Radioactive Effluent Control	10CFR72.24(1)(2)	8 3.3
	8.III.4 Written Procedures	10CFR72 212(b)(9)	8 0

Table 1.0.2 (continued)

HI-STORM 100 SYSTEM FSAR REGULATORY COMPLIANCE CROSS REFERENCE MATRIX

Regulatory Guide 3.61 Section and Content	Associated NUREG-1536 Review Criteria	Applicable 10CFR72 or 10CFR20 Requirement	HI-STORM FSAR
	8.III.5 Establish Written Procedures and Tests	10CFR72.234(f)	8.0
	8.III.6 Wet or Dry Loading and Unloading Compatibility	10CFR72.236(h)	8.0
	8.III.8 Ready Retrieval	10CFR72.122(1)	8.3
8.3 Preparation of the Cask	--	--	8.3.2
8.4 Supplemental Data	--	--	Tables 8.1.1 to 8.1.10
NA	8.III.9 Design to Minimize Radwaste	10CFR72.24(f) 10CFR72.128(a)(5)	8.1, 8.3
	8.III.10 SSCs Permit Inspection, Maintenance, and Testing	10CFR72.122(f)	Table 8.1.6
9. Acceptance Criteria and Maintenance Program			
9.1 Acceptance Criteria	9.III.1.a Preoperational Testing & Initial Operations	10CFR72.24(p)	8.1, 9.1
	9.III.1.c SSCs Tested and Maintained to Appropriate Quality Standards	10CFR72.24(c) 10CFR72.122(a)	9.1
	9.III.1.d Test Program	10CFR72.162	9.1
	9.III.1.e Appropriate Tests	10CFR72.236(1)	9.1
	9.III.1.f Inspection for Cracks, Pinholes, Voids and Defects	10CFR72.236(j)	9.1
	9.III.1.g Provisions that Permit Commission Tests	10CFR72.232(b)	9.1[(2)]
9.2 Maintenance	9.III 1.b Maintenance	10CFR72.236(g)	9.2

Table 1.0.2 (continued)

HI-STORM 100 SYSTEM FSAR REGULATORY COMPLIANCE CROSS REFERENCE MATRIX

Regulatory Guide 3.61 Section and Content	Associated NUREG-1536 Review Criteria	Applicable 10CFR72 or 10CFR20 Requirement	HI-STORM FSAR
Program	9.III.1.c and SSCs Tested Maintained to Appropriate Quality Standards	10CFR72.122(f) 10CFR72.128(a)(1)	9.2
	9.III.1.h Records of Maintenance	10CFR72.212(b)(8)	9.2
NA	9.III.2 Resolution of Issues Concerning Adequacy of Reliability	10CFR72.24(i)	(3)
	9.III.1.d Submit Pre-Op Test Results to NRC	10CFR72.82(e)	(4)
	9.III.1.i Casks Conspicuously and Durably Marked	10CFR72.236(k)	9.1.7, 9.1.1.(12)
	9.III.3 Cask Identification		
10. Radiation Protection			
10.1 Ensuring that Occupational Exposures are as Low as Reasonably Achievable (ALARA)	10.III.4 ALARA	10CFR20.1101 10CFR72.24(e) 10CFR72.104(b) 10CFR72.126(a)	10.1
10.2 Radiation Protection Design Features	10.V.1.b Design Features	10CFR72.126(a)(6)	10.2
10.3 Estimated Onsite Collective Dose Assessment	10.III.2 Occupational Exposures	10CFR20.1201 10CFR20.1207 10CFR20.1208 10CFR20.1301	10.3
N/A	10.III.3 Public Exposure	10CFR72.104 10CFR72.106	10.4

Table 1.0.2 (continued)

HI-STORM 100 SYSTEM FSAR REGULATORY COMPLIANCE CROSS REFERENCE MATRIX

Regulatory Guide 3.61 Section and Content	Associated NUREG-1536 Review Criteria	Applicable 10CFR72 or 10CFR20 Requirement	HI-STORM FSAR
	10.III.1 Effluents and Direct Radiation	10CFR72.104	
11. Accident Analyses			
11.1 Off-Normal Operations	11.III.2 Meet Dose Limits for Anticipated Events	10CFR72.24(d) 10CFR72.104(a) 10CFR72.236(d)	11.1
	11.III.4 Maintain Subcritical Condition	10CFR72.124(a) 10CFR72.236(c)	11.1
	11.III.7 Instrumentation and Control for Off-Normal Condition	10CFR72.122(i)	11.1
11.2 Accidents	11.III.1 SSCs Important to Safety Designed for Accidents	10CFR72.24(d)(2) 10CFR72.122b(2) 10CFR72.122b(3) 10CFR72.122(d) 10CFR72.122(g)	11.2
	11.III.5 Maintain Confinement for Accident	10CFR72.236(1)	11.2
	11.III.4 Maintain Subcritical Condition	10CFR72.124(a) 10CFR72.236(c)	11.2, 6.0
	11.III.3 Meet Dose Limits for Accidents	10CFR72.24(d)(2) 10CFR72.24(m) 10CFR72.106(b)	11.2, 5.1.2, 7.3
	11.III.6 Retrieval	10CFR72.122(l)	8.3
	11.III.7 Instrumentation and Control for Accident Conditions	10CFR72.122(i)	(5)
NA	11.III.8 Confinement Monitoring	10CFR72.122h(4)	7.1.4
12. Operating Controls and Limits			

Table 1.0.2 (continued)

HI-STORM 100 SYSTEM FSAR REGULATORY COMPLIANCE CROSS REFERENCE MATRIX

Regulatory Guide 3.61 Section and Content	Associated NUREG-1536 Review Criteria	Applicable 10CFR72 or 10CFR20 Requirement	HI-STORM FSAR
12.1 Proposed Operating Controls and Limits	--	10CFR72.44(c)	12.0
	12.III.1.e Administrative Controls	10CFR72.44(c)(5)	12.0
12.2 Development of Operating Controls and Limits	12.III.1 General Requirement for Technical Specifications	10CFR72 24(g) 10CFR72.26 10CFR72.44(c) 10CFR72 Subpart E 10CFR72 Subpart F	12.0
12.2.1 Functional and Operating Limits, Monitoring Instruments, and Limiting Control Settings	12.III.1.a Functional/ Operating Units, Monitoring Instruments and Limiting Controls	10CFR72.44(c)(1)	Appendix 12.A
12.2.2 Limiting Conditions for Operation	12.III.1.b Limiting Controls	10CFR72.44(c)(2)	Appendix 12.A
	12.III.2.a Type of Spent Fuel	10CFR72.236(a)	Appendix 12.A
	12.III.2.b Enrichment		
	12.III.2.c Burnup		
	12.III.2.d Minimum Acceptance Cooling Time		
	12.III.2.f Maximum Spent Fuel Loading Limit		
	12.III.2g Weights and Dimensions		
	12.III.2.h Condition of Spent Fuel		
	12.III.2e Maximum Heat Dissipation	10CFR72 236(a)	Appendix 12.A
	12.III.2.ı Inerting Atmosphere Requirements	10CFR72.236(a)	Appendix 12.A
12 2.3 Surveillance Specifications	12.III.1.c Surveillance Requirements	10CFR72.44(c)(3)	Chapter 12

Table 1.0.2 (continued)

HI-STORM 100 SYSTEM FSAR REGULATORY COMPLIANCE CROSS REFERENCE MATRIX

Regulatory Guide 3.61 Section and Content	Associated NUREG-1536 Review Criteria	Applicable 10CFR72 or 10CFR20 Requirement	HI-STORM FSAR
12.2.4 Design Features	12.III.1.d Design Features	10CFR72.44(c)(4)	Chapter 12
12.2.4 Suggested Format for Operating Controls and Limits	--	--	Appendix 12.A
NA	12.III.2 SCC Design Bases and Criteria	10CFR72.236(b)	2.0
NA	12.III.2 Criticality Control	10CFR72.236(c)	2.3.4, 6.0
NA	12.III.2 Shielding and Confinement	10CFR20 10CFR72.236(d)	2.3.5, 7.0, 5.0, 10.0
NA	12.III.2 Redundant Sealing	10CFR72.236(e)	7.1, 2.3.2
NA	12.III 2 Passive Heat Removal	10CFR72.236(f)	2.3.2.2, 4.0
NA	12.III.2 20 Year Storage and Maintenance	10CFR72.236(g)	1.2.1.5, 9.0, 3.4.10, 3.4.11
NA	12.III.2 Decontamination	10CFR72.236(i)	8.0, 10.1
NA	12.III.2 Wet or Dry Loading	10CFR72.236(h)	8.0
NA	12.III.2 Confinement Effectiveness	10CFR72.236(j)	9.0
NA	12.III.2 Evaluation for Confinement	10CFR72.236(l)	7.1, 7.2, 9.0
13. Quality Assurance			
13.1 Quality Assurance	13.III Regulatory Requirements	10CFR72.24(n)	13.0
	13.IV Acceptance Criteria	10CFR72, Subpart G	

Table 1.0.2 (continued)

HI-STORM 100 SYSTEM FSAR REGULATORY COMPLIANCE CROSS REFERENCE MATRIX

Notes:

(1) The stated requirement is the responsibility of the licensee (i.e., utility) as part of the ISFSI pad and is therefore not addressed in this application.

(2) It is assumed that approval of the FSAR by the NRC is the basis for the Commission's acceptance of the tests defined in Chapter 9.

(3) Not applicable to HI-STORM 100 System. The functional adequacy of all important to safety components is demonstrated by analyses.

(4) The stated requirement is the responsibility of licensee (i.e., utility) as part of the ISFSI and is therefore not addressed in this application.

(5) The stated requirement is not applicable to the HI-STORM 100 System. No monitoring is required for accident conditions.

"—" There is no corresponding NUREG-1536 criteria, no applicable 10CFR72 or 10CFR20 regulatory requirement, or the item is not addressed in the FSAR.

"NA" There is no Regulatory Guide 3.61 section that corresponds to the NUREG-1536, 10CFR72, or 10CFR20 requirement being addressed.

Table 1.0.3

HI-STORM 100 SYSTEM FSAR CLARIFICATIONS AND EXCEPTIONS TO NUREG-1536

NUREG-1536 Requirement	Alternate Method to Meet NUREG-1536 Intent	Justification
2.V.2.(b)(1) "The NRC accepts as the maximum and minimum "normal" temperatures the highest and lowest ambient temperatures recorded in each year, averaged over the years of record."	Exception: Section 2.2.1.4 for environmental temperatures utilizes an upper bounding value of 80°F on the annual average ambient temperatures for the United States.	The 80°F temperature set forth in Table 2.2.2 is greater than the annual average ambient temperature at any location in the continental United States. Inasmuch as the primary effect of the environmental temperature is on the computed fuel cladding temperature to establish long-term fuel cladding integrity, the annual average ambient temperature for each ISFSI site should be below 80°F. The large thermal inertia of the HI-STORM 100 System ensures that the daily fluctuations in temperatures do not affect the temperatures of the system. Additionally, the 80°F ambient temperature is combined with insolation in accordance with 10CFR71.71 averaged over 24 hours.
2.V.2.(b)(3)(f) "10CFR Part 72 identifies several other natural phenomena events (including seiche, tsunami, and hurricane) that should be addressed for spent fuel storage."	Clarification: A site-specific safety analysis of the effects of seiche, tsunami, and hurricane on the HI-STORM 100 System must be performed prior to use if these events are applicable to the site.	In accordance with NUREG-1536, 2.V.(b)(3)(f), if seiche, tsunami, and hurricane are not addressed in the SAR and they prove to be applicable to the site, a safety analysis is required prior to approval for use of the DCSS under either a site specific, or general license.

Table 1.0.3 (continued)

HI-STORM 100 SYSTEM FSAR CLARIFICATIONS AND EXCEPTIONS TO NUREG-1536

NUREG-1536 Requirement	Alternate Method to Meet NUREG-1536 Intent	Justification
3.V.1.d.i.(2)(a), page 3-11, "Drops with the axis generally vertical should be analyzed for both the conditions of a flush impact and an initial impact at a corner of the cask..."	Clarification: As stated in NUREG-1536, 3.V.(d), page 3-11, "Generally, applicants establish the design basis in terms of the maximum height to which the cask is lifted outside the spent fuel building, or the maximum deceleration that the cask could experience in a drop." The maximum deceleration for a corner drop is specified as 45g's for the HI-STORM overpack. No carry height limit is specified for the corner drop.	In Chapter 3, the MPC and HI-STORM overpack are evaluated under a 45g radial loading. A 45g axial loading on the MPC is bounded by the analysis presented in the HI-STAR FSAR, Docket 72-1008, under a 60g loading, and is not repeated in this FSAR. In Chapter 3, the HI-STORM overpack is evaluated under a 45g axial loading. Therefore, the HI-STORM overpack and MPC are qualified for a 45g loading as a result of a corner drop. Depending on the design of the lifting device, the type of rigging used, the administrative vertical carry height limit, and the stiffness of the impacted surface, site-specific analyses may be required to demonstrate that the deceleration limit of 45g's is not exceeded.
3.V.2.b.i (1), Page 3-19, Para. 1, "All concrete used in storage cask system ISFSIs, and subject to NRC review, should be reinforced..." 3.V.2.b.i.(2)(b), Page 3-20, Para. 1, "The NRC accepts the use of ACI 349 for the design, material selection and specification, and construction of all reinforced concrete structures that are not addressed within the scope of ACI 359". 3.V.2.c.i, Page 3-22, Para. 3, "Materials and material properties used for the design and construction of reinforced concrete structures important to safety but not within the scope of ACI 359 should comply with the requirements of ACI 349".	Exception: The HI-STORM overpack concrete is not reinforced. However, ACI 349 [1.0.4] is used for the material selection and specification, and construction of the plain concrete. Appendix 1.D provides the relevant sections of ACI 349 applicable to the plain concrete in the overpack. ACI 318-95 [1.0.5] is used for the calculation of the compressive strength of the plain concrete.	Concrete is provided in the HI-STORM overpack solely for the purpose of radiation shielding during normal operations. During lifting and handling operations and under certain accident conditions, the compressive strength of the concrete (which is not impaired by the absence of reinforcement) is utilized. However, since the structural reliance under loadings which produce section flexure and tension is entirely on the steel structure of the overpack, reinforcement in the concrete will serve no useful purpose. To ensure the quality of the shielding concrete, all relevant provisions of ACI 349 are imposed as clarified in Appendix 1.D. In addition, the temperature limits for normal and off-normal condition from ACI 349 will be imposed. Finally, the Fort St. Vrain ISFSI (Docket No. 72-9) also

Table 1.0.3 (continued)

HI-STORM 100 SYSTEM FSAR CLARIFICATIONS AND EXCEPTIONS TO NUREG-1536

NUREG-1536 Requirement	Alternate Method to Meet NUREG-1536 Intent	Justification
		utilized plain concrete for shielding purposes, which is important to safety.
3.V.3.b.i.(2), Page 3-29, Para. 1, "The NRC accepts the use of ANSI/ANS-57.9 (together with the codes and standards cited therein) as the basic reference for ISFSI structures important to safety that are not designed in accordance with Section III of the ASME B&PV Code."	Clarification: The HI-STORM overpack steel structure is designed in accordance with the ASME B&PV Code, Section III, Subsection NF, Class 3. Any exceptions to the Code are listed in Table 2.2.15.	The overpack structure is a steel weldment consisting of "plate and shell type" members. As such, it is appropriate to design the structure to Section III, Class 3 of Subsection NF. The very same approach has been used in the structural evaluation of the "intermediate shells" in the HI-STAR 100 overpack (Docket Number 72-1008) previously reviewed and approved by the USNRC.
4.IV.5, Page 4-2 "for each fuel type proposed for storage, the DCSS should ensure a very low probability (e.g., 0.5 percent per fuel rod) of cladding breach during long-term storage." 4.IV.1, Page 4-3, Para. 1 "the staff should verify that cladding temperatures for each fuel type proposed for storage will be below the expected damage thresholds for normal conditions of storage." 4.IV.1, Page 4-3, Para. 2 "fuel cladding limits for each fuel type should be defined in the SAR with thermal restrictions in the DCSS technical specifications." 4.V.1, Page 4-3, Para. 4 "the applicant should verify that these cladding temperature limits are appropriate for all fuel types proposed for storage, and that the fuel cladding temperatures will remain	Clarification: As described in Section 4.3, all fuel array types authorized for storage have been evaluated for the peak fuel cladding temperature limit.	As described in Section 4.3, all fuel array types authorized for storage have been evaluated for the peak fuel cladding temperature limit. All major variations in fuel parameters are considered in the determination of the peak fuel cladding temperature limits. Minor variations in fuel parameters within an array type are bounded by the conservative determination of the peak fuel cladding temperature limit.

Table 1.0.3 (continued)

HI-STORM 100 SYSTEM FSAR CLARIFICATIONS AND EXCEPTIONS TO NUREG-1536

NUREG-1536 Requirement	Alternate Method to Meet NUREG-1536 Intent	Justification
below the limit for facility operations (e.g., fuel transfer) and the worst-case credible accident."		
4.V.4.a, Page 4-6, Para. 3 "applicants seeking NRC approval of specific internal convection models should propose, in the SAR, a comprehensive test program to demonstrate the adequacy of the cask design and validation of the convection models."	Exception: The natural convection model described in Subsection 4.4.1. is based on classical correlations for natural convection in differentially heated cavities which have been validated by many experimental studies. Therefore, no additional test program is proposed.	Many experimental studies of this mechanism have been performed by others and reported in open literature sources. As discussed in Subsection 4.4.1, natural convection has been limited to the relatively large MPC basket to shell peripheral gaps. Subsection 4.4.1 provides sufficient references to experiments which document the validity of the classical correlation used in the analysis.
4.V.4.a, Page 4-6, Para. 6 "the basket wall temperature of the hottest assembly can then be used to determine the peak rod temperature of the hottest assembly using the Wooten-Epstein correlation."	Clarification: As discussed in Subsection 4.4.2, conservative maximum fuel temperatures are obtained directly from the cask thermal analysis. The peak fuel cladding temperatures are then used to determine the corresponding peak basket wall temperatures using a finite-element based update of Wooten-Epstein (described in Subsection 4.4.1.1.2)	The finite-element based thermal conductivity is greater than a Wooten-Epstein based value. This larger thermal conductivity minimizes the fuel-to-basket temperature difference. Since the basket temperature is less than the fuel temperature, minimizing the temperature difference conservatively maximizes the basket wall temperature.
4.V.4.b, Page 4-7, Para. 2 "if the thermal model is axisymmetric or three-dimensional, the longitudinal thermal conductivity should generally be limited to the conductivity of the cladding (weighted fractional area) within the fuel assembly."	Clarification: As described in Subsection 4.4.1.1.4, the axial thermal conductivity of the fuel basket is set equal to the cross-sectional thermal conductivity.	Due to the large number of gaps in the cross-sectional heat transfer paths, use of the fuel basket cross-sectional thermal conductivity for the axial thermal conductivity severely underpredicts the axial thermal conductivity of the fuel basket region. This imposed axial thermal conductivity restriction is even more limiting than that imposed by this requirement of NUREG-1536.

Table 1.0.3 (continued)

HI-STORM 100 SYSTEM FSAR CLARIFICATIONS AND EXCEPTIONS TO NUREG-1536

NUREG-1536 Requirement	Alternate Method to Meet NUREG-1536 Intent	Justification
4.V.4.b, Page 4-7, Para. 2 "high burnup effects should also be considered in determining the fuel region effective thermal conductivity."	Exception: All calculations of fuel assembly effective thermal conductivities, described in Subsection 4.4.1.1.2, use nominal fuel design dimensions, neglecting wall thinning associated with high burnup.	Within Subsection 4.4.1.1.2, the calculated effective thermal conductivities based on nominal design fuel dimensions are compared with available literature values and are demonstrated to be conservative by a substantial margin.
4.V.4.c, Page 4-7, Para. 5 "a heat balance on the surface of the cask should be given and the results presented."	Clarification: No additional heat balance is performed or provided.	The FLUENT computational fluid dynamics program used to perform evaluations of the HI-STORM Overpack and HI-TRAC transfer cask, which uses a discretized numerical solution algorithm, enforces an energy balance on all discretized volumes throughout the computational domain. This solution method, therefore, ensures a heat balance at the surface of the cask.
4.V.5.a, Page 4-8, Para. 2 "the SAR should include input and output file listings for the thermal evaluations."	Exception: No input or output file listings are provided in Chapter 4.	A complete set of computer program input and output files would be in excess of three hundred pages. All computer files are considered proprietary because they provide details of the design and analysis methods. In order to minimize the amount of proprietary information in the FSAR, computer files are provided in the proprietary calculation packages.
4.V.5.c, Page 4-10, Para. 3 "free volume calculations should account for thermal expansion of the cask internal components and the fuel when subjected to accident temperatures.	Exception: All free volume calculations use nominal confinement boundary dimensions, but the volume occupied by the MPC internals (i.e., fuel assemblies, fuel basket, etc.) are calculated using maximum weights and minimum densities.	Calculating the volume occupied by the MPC internals (i.e., fuel assemblies, fuel basket, etc.) using maximum weights and minimum densities conservatively overpredicts the volume occupied by the internal components and correspondingly underpredicts the remaining free volume.

Table 1.0.3 (continued)

HI-STORM 100 SYSTEM FSAR CLARIFICATIONS AND EXCEPTIONS TO NUREG-1536

NUREG-1536 Requirement	Alternate Method to Meet NUREG-1536 Intent	Justification
7.V.4.c, Page 7-7, Para. 2 and 3 "Because the leak is assumed to be instantaneous, the plume meandering factor of Regulatory Guide 1.145 is not typically applied." and "Note that for an instantaneous release (and instantaneous exposure), the time that an individual remains at the controlled area boundary is not a factor in the dose calculation."	Exception: As described in Section 7.3, in lieu of an instantaneous release, the assumed leakage rate is set equal to the leakage rate acceptance criteria ($5x10^{-6}$ atm-cm^3/s) plus 50% for conservatism, which yields $7.5x10^{-6}$ atm-cm^3/s. Because the release is assumed to be a leakage rate, the individual is assumed to be at the controlled area boundary for 720 hours. Additionally, the atmospheric dispersion factors of Regulatory Guide 1.145 are applied	The MPC uses redundant closures to assure that there is no release of radioactive materials under all credible conditions. Analyses presented in Chapters 3 and 11 demonstrate that the confinement boundary does not degrade under all normal, off-normal, and accident conditions. Multiple inspection methods are used to verify the integrity of the confinement boundary (e.g., helium leakage, hydrostatic, and volumetric weld inspection). The NRC letter to Holtec International dated 9/15/97, Subject. Supplemental Request for Additional Information - HI-STAR 100 Dual Purpose Cask System (TAC No. L22019), RAI 7.3 states "use the verified confinement boundary leakage rate in lieu of the assumption that the confinement boundary fails."
9.V.1.a, Page 9-4, Para. 4 "Acceptance criteria should be defined in accordance with NB/NC-5330, "Ultrasonic Acceptance Standards"."	Clarification: Section 9.1.1.1 and the Design Drawings specify that the ASME Code, Section III, Subsection NB, Article NB-5332 will be used for the acceptance criteria for the volumetric examination of the MPC lid-to-shell weld.	In accordance with the first line on page 9-4, the NRC endorses the use of "...appropriate acceptance criteria as defined by either the ASME code, or an alternative approach..." The ASME Code, Section III, Subsection NB, Paragraph NB-5332 is appropriate acceptance criteria for pre-service examination.

Table 1.0.3 (continued)

HI-STORM 100 SYSTEM FSAR CLARIFICATIONS AND EXCEPTIONS TO NUREG-1536

NUREG-1536 Requirement	Alternate Method to Meet NUREG-1536 Intent	Justification
9.V.1.d, Para. 1 "Tests of the effectiveness of both the gamma and neutron shielding may be required if, for example, the cask contains a poured lead shield or a special neutron absorbing material."	Exception: Subsection 9.1.5 describes the control of special processes, such as neutron shield material installation, to be performed in lieu of scanning or probing with neutron sources.	The dimensional compliance of all shielding cavities is verified by inspection to design drawing requirements prior to shield installation. The Holtite-A shield material is installed in accordance with written, approved, and qualified special process procedures. The composition of the Holtite-A is confirmed by inspection and tests prior to first use. Following the first loading for the HI-TRAC transfer cask and each HI-STORM overpack, a shield effectiveness test is performed in accordance with written approved procedures, as specified in Section 9.1.
ISG-15, Section X.5.4.2, "No more than 1% of the rods in an assembly have peak cladding oxide thicknesses greater than 80 micrometers and no more than 3% of the rods in an assembly have peak cladding oxide thicknesses greater than 70 micrometers. A high burnup fuel assembly should be treated as potentially damaged fuel if the assembly does not meet both of the above criteria of if the fuel assembly contains fuel rods with oxide that has become detached or spalled from the cladding	The Fuel Cladding Oxide Thickness Evaluation Program in Section 5.0 of Appendix A to the CoC provides an equation to calculate the maximum allowable high burnup fuel cladding oxide thickness, based on fuel assembly type.	FSAR Appendix 4.A, Section 4.A.9 provides the justification for this deviation form NUREG-1536 (ISG-15).

1.1 INTRODUCTION

HI-STORM 100 (acronym for Holtec International Storage and Transfer Operation Reinforced Module) is a spent nuclear fuel storage system designed to be in full compliance with the requirements of 10CFR72. The annex "100" is a model number designation which denotes a system weighing over 100 tons. The HI-STORM 100 System consists of a sealed metallic canister, herein abbreviated as the "MPC", contained within an overpack. Its design features are intended to simplify and reduce on-site SNF loading, handling, and monitoring operations, and to provide for radiological protection and maintenance of structural and thermal safety margins.

The HI-STORM 100S overpack is a variant of the HI-STORM 100 overpack and has its own set of drawings in Section 1.5. The "S" suffix indicates an enhanced overpack design, as described later in this section. The HI-STORM 100S accepts the same MPCs and fuel types as the HI-STORM 100 and the basic structural, shielding, and thermal-hydraulic characteristics remain unchanged. Hereafter in this FSAR reference to HI-STORM 100 System or the HI-STORM overpack is construed to apply to both the HI-STORM 100 and the HI-STORM 100S. Where necessary, the text distinguishes between the two overpack designs. See Figures 1.1.1A and 1.1.3A for a pictorial view of the HI-STORM 100S overpack design.

The HI-STORM 100A overpack is a third variant of the HI-STORM 100 family and is specially outfitted with an extended baseplate and gussets to enable the overpack to be anchored to the ISFSI pad in high seismic applications. In the following, the modified structure of the HI-STORM 100A, in each of four quadrants, is denoted as a "sector lug." The HI-STORM 100A design is also applicable to the HI-STORM 100S overpack, in which case the assembly would be named HI-STORM 100SA. Hereafter in the text, discussion of HI-STORM 100A applies to both the standard (HI-STORM 100A) and short (HI-STORM 100SA) overpacks, unless otherwise clarified.

The HI-STORM 100 System is designed to accommodate a wide variety of spent nuclear fuel assemblies in a single overpack design by utilizing different MPCs. The external dimensions of all MPCs are identical to allow the use of a single overpack. Each of the MPCs has different internals (baskets) to accommodate distinct fuel characteristics. Each MPC is identified by the maximum quantity of fuel assemblies it is capable of receiving. The MPC-24, MPC-24E, and MPC-24EF contain a maximum of 24 PWR fuel assemblies; the MPC-32 contains a maximum of 32 PWR fuel assemblies; and the MPC-68, MPC-68F, and MPC-68FF contain a maximum of 68 BWR fuel assemblies.

The HI-STORM overpack is constructed from a combination of steel and concrete, both of which are materials with long, proven histories of usage in nuclear applications. The HI-STORM overpack incorporates and combines many desirable features of previously-approved concrete and metal module designs. In essence, the HI-STORM overpack is a hybrid of metal and concrete systems, with the design objective of emulating the best features and dispensing with the drawbacks of both. The HI-STORM overpack is best referred to as a METCON™ (metal/concrete composite) system.

Figures 1.1.1 and 1.1.1A show the HI-STORM 100 with two of its major constituents, the MPC and the storage overpack, in a cut-away view. The MPC, shown partially withdrawn from the storage overpack, is an integrally welded pressure vessel designed to meet the stress limits of the ASME Boiler and Pressure Vessel Code, Section III, Subsection NB [1.1.1]. The MPC defines the confinement boundary for the stored spent nuclear fuel assemblies with respect to 10CFR72 requirements and attendant review considerations. The HI-STORM 100 storage overpack provides mechanical protection, cooling, and radiological shielding for the contained MPC.

In essence, the HI-STORM 100 System is the storage-only counterpart of the HI-STAR 100 System (Docket Numbers 72-1008 (Ref. [1.1.2]) and 71-9261 (Ref. [1.1.3])). Both HI-STORM and HI-STAR are engineered to house identical MPCs. Since the MPC is designed to meet the requirements of both 10CFR71 and 10CFR72 for transportation and storage, respectively, the HI-STORM 100 System allows rapid decommissioning of the ISFSI by simply transferring the loaded MPC's directly into HI-STAR 100 overpacks for off-site transport. This alleviates the additional fuel handling steps required by storage-only casks to unload the cask and repackage the fuel into a suitable transportation cask.

In contrast to the HI-STAR 100 overpack, which provides a containment boundary for the SNF during transport, the HI-STORM storage overpack does not constitute a containment or confinement enclosure. The HI-STORM overpack is equipped with large penetrations near its lower and upper extremities to permit natural circulation of air to provide for the passive cooling of the MPC and the contained radioactive material. The HI-STORM is engineered to be an effective barrier against the radiation emitted by the stored materials, and an efficiently configured metal/concrete composite to attenuate the loads transmitted to the MPC during a natural phenomena or hypothetical accident event. Other auxiliary functions of the HI-STORM overpack include isolation of the SNF from abnormal environmental or man-made events, such as impact of a tornado borne missile. As the subsequent chapters of this FSAR demonstrate, the HI-STORM overpack is engineered with large margins of safety with respect to cooling, shielding, and mechanical/structural functions.

The HI-STORM 100 System is autonomous inasmuch as it provides SNF and radioactive material confinement, radiation shielding, criticality control and passive heat removal independent of any other facility, structures, or components. The surveillance and maintenance required by the plant's staff is minimized by the HI-STORM 100 System since it is completely passive and is composed of materials with long proven histories in the nuclear industry. The HI-STORM 100 System can be used either singly or as the basic storage module in an ISFSI. The site for an ISFSI can be located either at a reactor or away from a reactor.

The information presented in this report is intended to demonstrate the acceptability of the HI-STORM 100 System for use under the general license provisions of Subpart K by meeting the criteria set forth in 10CFR72.236.

The modularity of the HI-STORM 100 System accrues several advantages. Different MPCs, identical in exterior dimensions, manufacturing requirements, and handling features, but different in their SNF arrangement details, are designed to fit a common overpack. Even though the different MPCs have

fundamentally identical design and manufacturing attributes, qualification of HI-STORM 100 requires consideration of the variations in the characteristics of the MPCs. In most cases, however, it is possible to identify the most limiting MPC geometry and the specific loading condition for the safety evaluation, and the detailed analyses are then carried out for that bounding condition. In those cases where this is not possible, multiple parallel analyses are performed.

The HI-STORM overpack is not engineered for transport and, therefore, will not be submitted for 10CFR Part 71 certification. HI-STORM 100, however, is designed to possess certain key elements of flexibility.

For example:

- The HI-STORM overpack is stored at the ISFSI pad in a vertical orientation which helps minimize the size of the ISFSI and leads to an effective natural convection cooling flow around the MPC.

- The HI-STORM overpack can be loaded with a loaded MPC using the HI-TRAC transfer cask inside the 10CFR50 [1.1.4] facility, prepared for storage, transferred to the ISFSI, and stored in a vertical configuration, or directly loaded using the HI-TRAC transfer cask at or nearby the ISFSI storage pad.

The version of the HI-STORM overpack equipped with sector lugs to anchor it to the ISFSI pad is labeled HI-STORM 100A, shown in Figure 1.1.4. Figure 1.1.5 shows the sector lugs and anchors used to fasten the overpack to the pad in closer view. Details on HI-STORM 100A are presented in the drawing and BOM contained in Section 1.5. Users may employ a double nut arrangement as an option. The HI-STORM 100A overpack will be deployed at those ISFSI sites where the postulated seismic event (defined by the three orthogonal ZPAs) exceeds the maximum limit permitted for free-standing installation. The design of the ISFSI pad and the embedment are necessarily site-specific and the responsibility of the ISFSI owner. These designs shall be in accordance with the requirements specified in Appendix 2.A. The jurisdictional boundary between the anchored cask design and the embedment design is defined in Table 2.0.5. Additional description on the HI-STORM 100A configuration is provided in Subsection 1.2.1.2.1.

The MPC is a multi-purpose SNF storage device both with respect to the type of fuel assemblies and its versatility of use. The MPC is engineered as a cylindrical prismatic structure with square cross section storage cavities. The number of storage locations depends on the type of fuel. Regardless of the storage cell count, the construction of the MPC is fundamentally the same; it is built as a honeycomb of cellular elements positioned within a circumscribing cylindrical canister shell. The manner of cell-to-cell weld-up and cell-to-canister shell interface employed in the MPC imparts extremely high structural stiffness to the assemblage, which is an important attribute for mechanical accident events. Figure 1.1.2 shows an elevation cross section of an MPC.

The MPC is identical to those presented in References [1.1.2] and [1.1.3], except for MPC-24E, 24EF, 32, and 68FF, until such time as those CoCs are amended to include these additional MPC models. Referencing these documents, as applicable, avoids repetition of information on the MPCs which is comprehensively set forth in the above-mentioned Holtec International documents docketed with the NRC.

However, sufficient information and drawings are presented in this report to maintain clarity of exposition of technical data.

The HI-STORM storage overpack is designed to provide the necessary neutron and gamma shielding to comply with the provisions of 10CFR72 for dry storage of SNF at an ISFSI. Cross sectional views of the HI-STORM storage overpacks are presented in Figures 1.1.3 and 1.1.3A. A HI-TRAC transfer cask is required for loading of the MPC and movement of the loaded MPC from the cask loading area of a nuclear plant spent fuel pool to the storage overpack. The HI-TRAC is engineered to be emplaced with an empty MPC into the cask loading area of nuclear plant spent fuel pools for fuel loading (or unloading). The HI-TRAC/MPC assembly is designed to preclude intrusion of pool water into the narrow annular space between the HI-TRAC and the MPC while the assembly is submerged in the pool water. The HI-TRAC transfer cask also allows dry loading (or unloading) of SNF into the MPC.

To summarize, the HI-STORM 100 System has been engineered to:

- minimize handling of the SNF;
- provide shielding and physical protection for the MPC;
- permit rapid and unencumbered decommissioning of the ISFSI;
- require minimal ongoing surveillance and maintenance by plant staff;
- minimize dose to operators during loading and handling;
- allow transfer of the loaded MPC to a HI-STAR overpack for transportation.

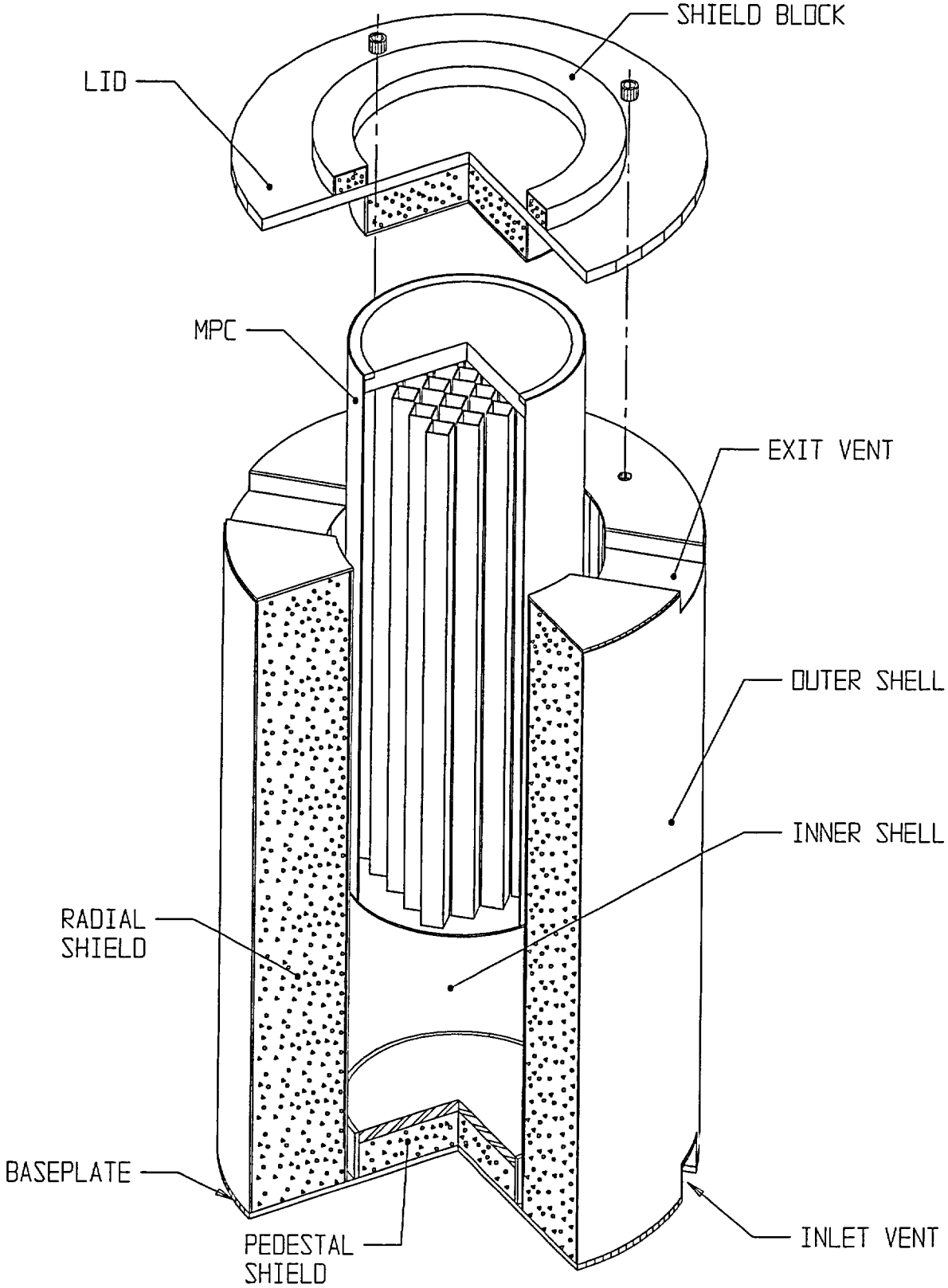

FIGURE 1.1.1; HI-STORM 100 OVERPACK WITH MPC PARTIALLY INSERTED

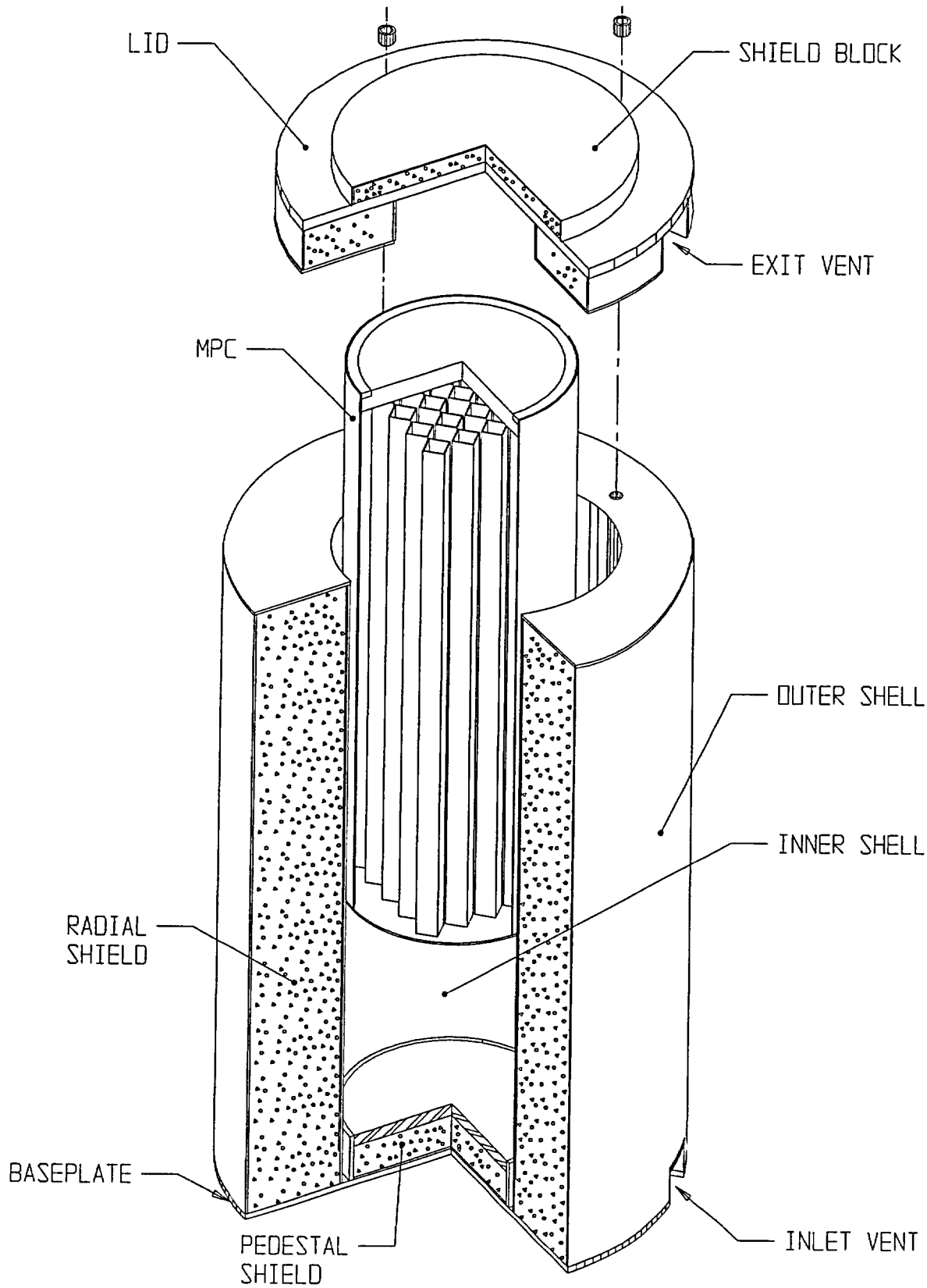

FIGURE 1.1.1A; HI-STORM 100S OVERPACK WITH MPC PARTIALLY INSERTED

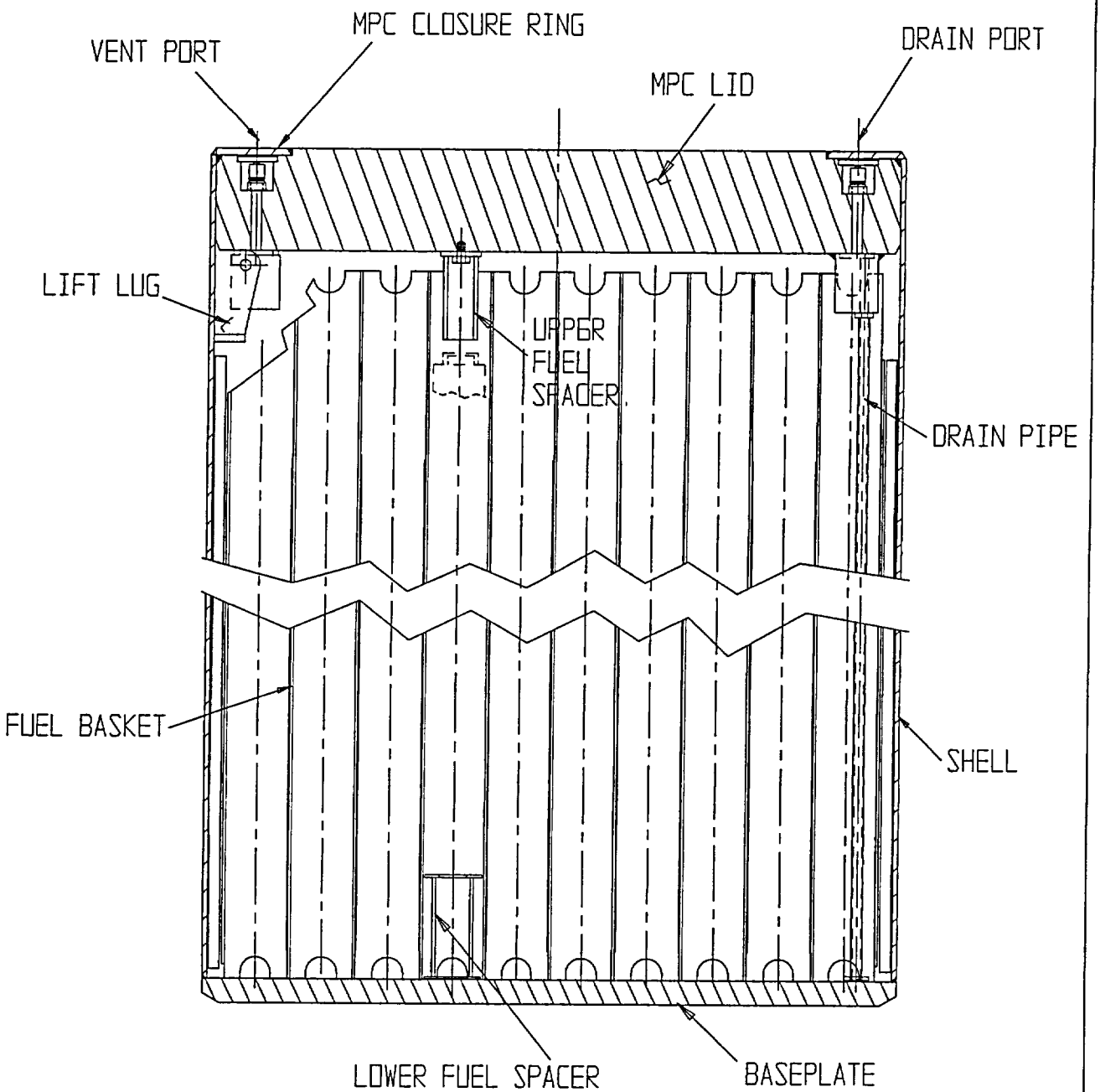

FIGURE 1.1.2; CROSS SECTION ELEVATION VIEW OF MPC

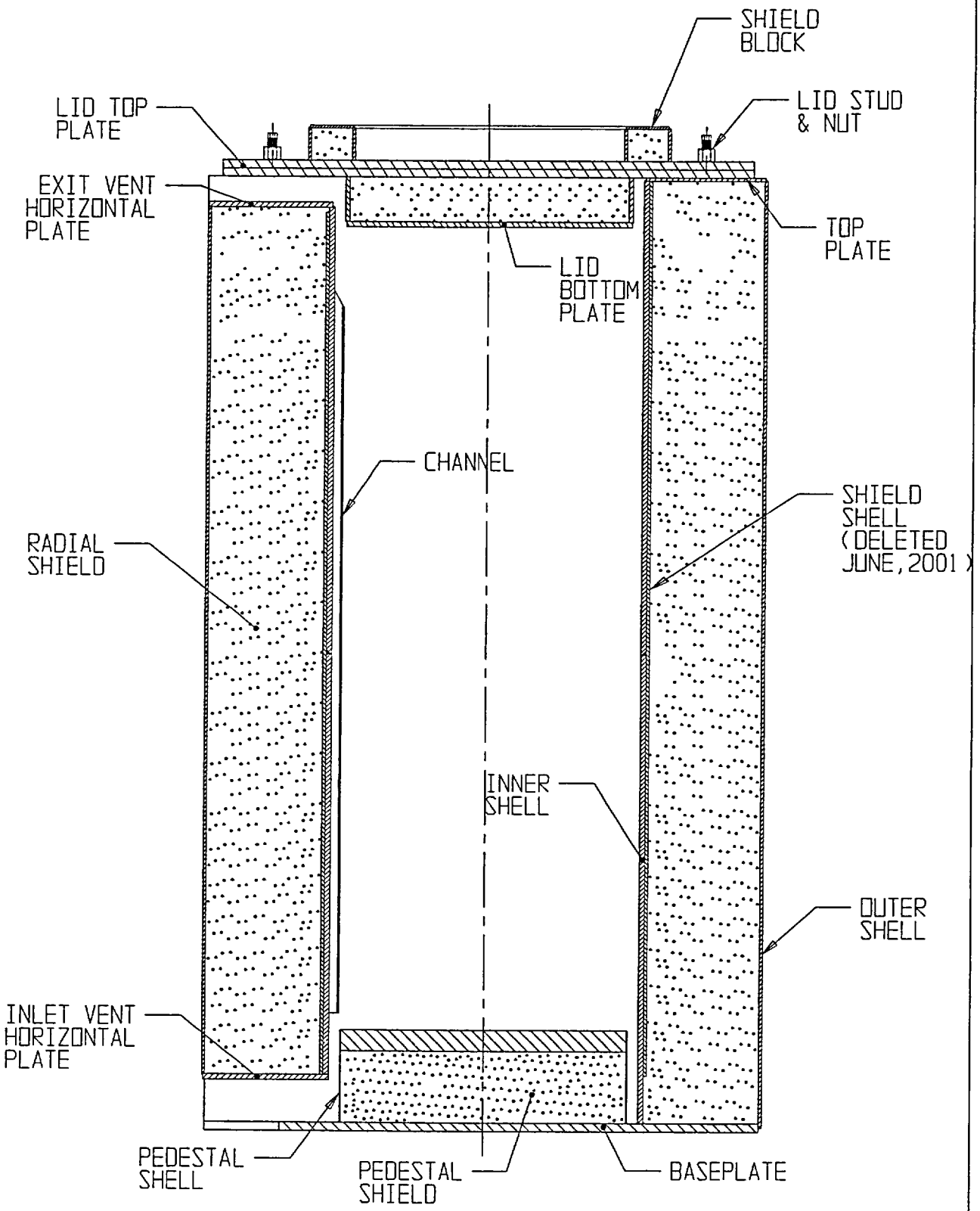

FIGURE 1.1.3; HI-STORM 100 OVERPACK CROSS SECTIONAL ELEVATION VIEW

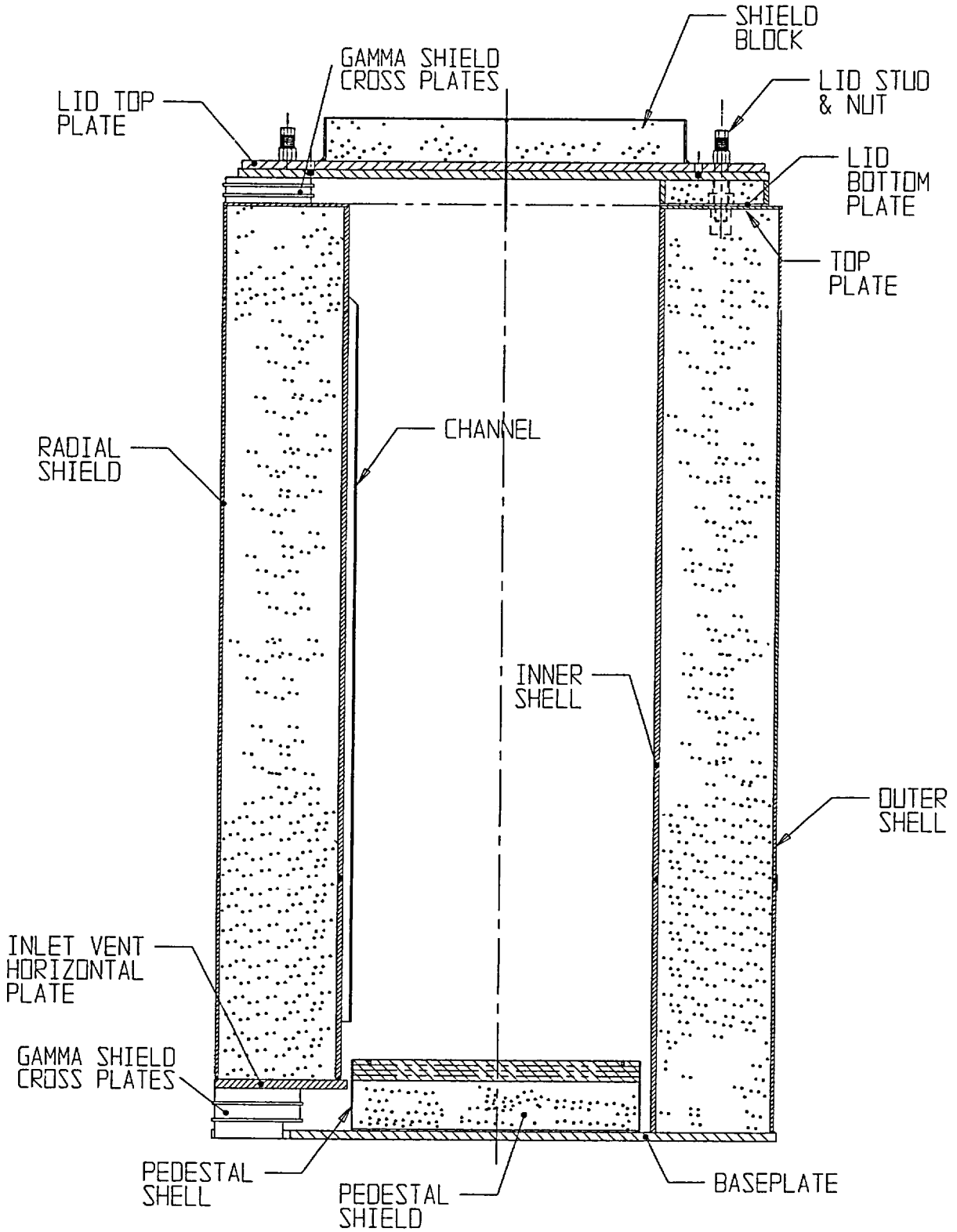

FIGURE 1.1.3A; HI-STORM 100S OVERPACK CROSS SECTIONAL ELEVATION VIEW

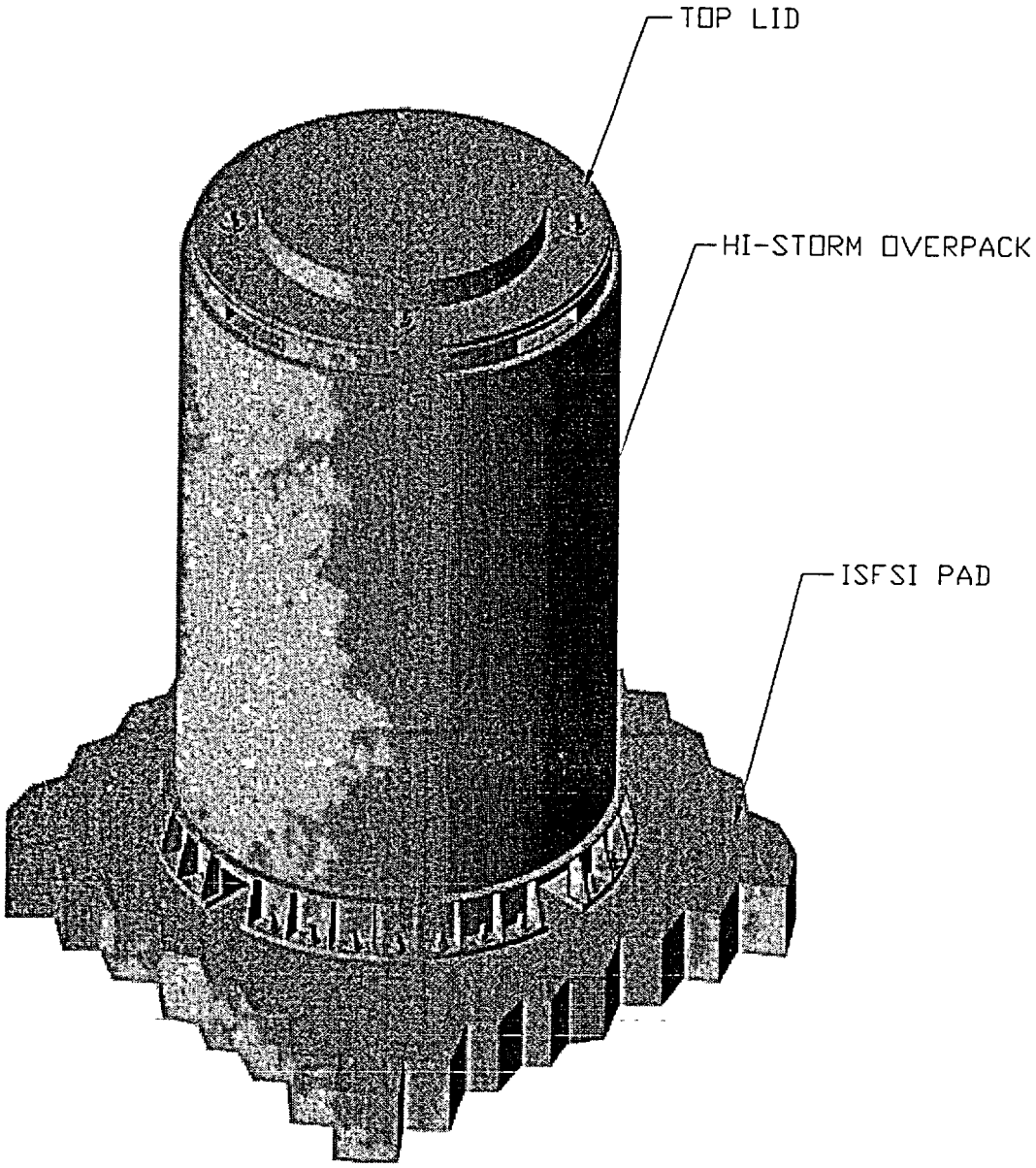

FIGURE 1.1.4; A PICTORAL VIEW OF THE HI-STORM 100A OVERPACK (100SA MODEL SHOWN)

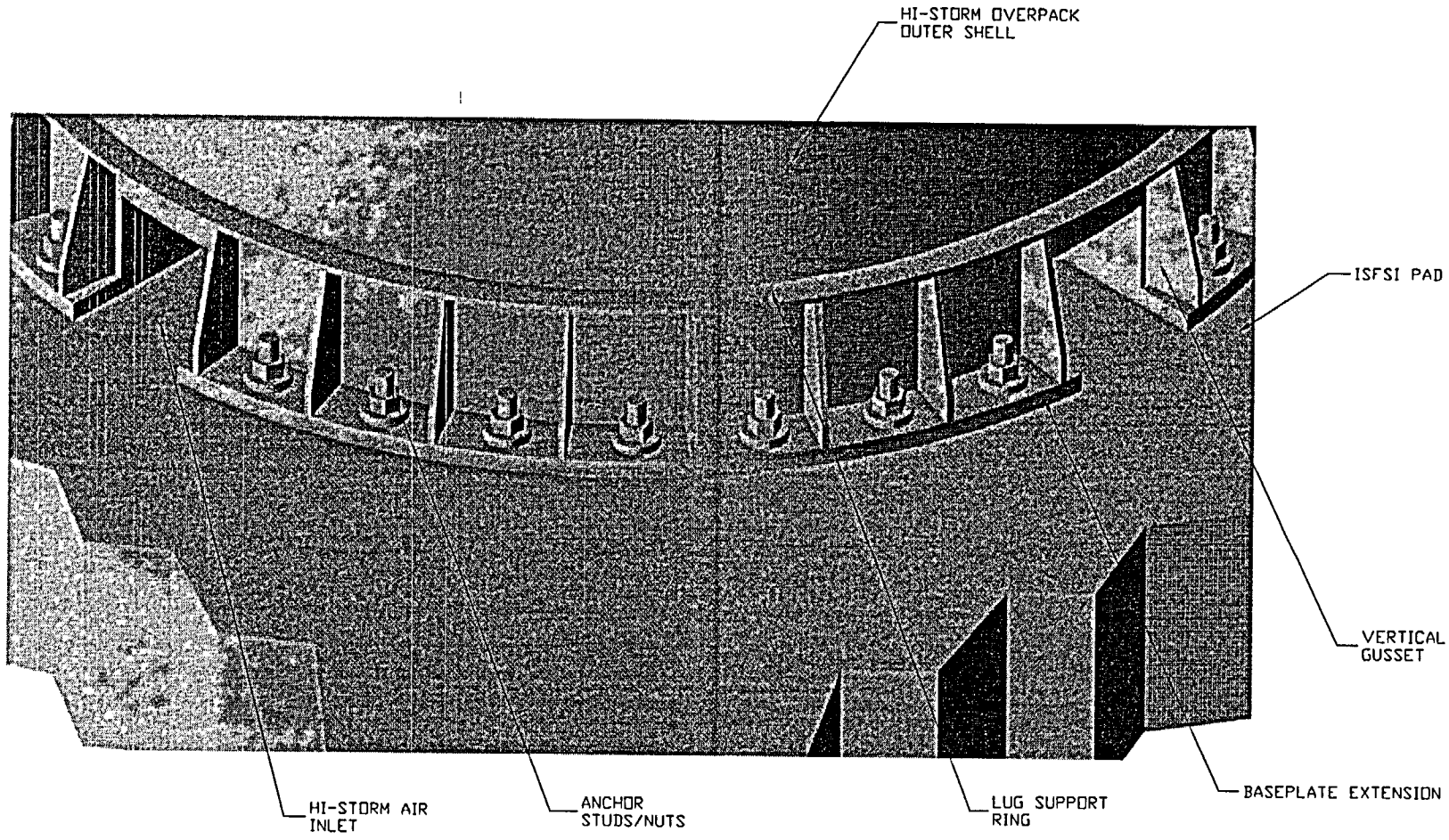

FIGURE 1.1.5; ANCHORING DETAIL FOR THE HI-STORM 100A AND 100SA OVERPACKS

1.2 GENERAL DESCRIPTION OF HI-STORM 100 System

1.2.1 System Characteristics

The basic HI-STORM 100 System consists of interchangeable MPCs providing a confinement boundary for BWR or PWR spent nuclear fuel, a storage overpack providing a structural and radiological boundary for long-term storage of the MPC placed inside it, and a transfer cask providing a structural and radiological boundary for transfer of a loaded MPC from a nuclear plant spent fuel storage pool to the storage overpack. Figure 1.2.1 provides a cross sectional view of the HI-STORM 100 System with an MPC inserted into a storage overpack. Figure 1.2.1A provides a cross sectional view of the HI-STORM 100 System with an MPC inserted into a HI-STORM 100S storage overpack. Each of these components is described below, including information with respect to component fabrication techniques and designed safety features. All structures, systems, and components of the HI-STORM 100 System which are identified as Important to Safety are specified in Table 2.2.6. This discussion is supplemented with a full set of detailed design drawings in Section 1.5.

The HI-STORM 100 System is comprised of three discrete components:

i. multi-purpose canister (MPC)
ii. storage overpack (HI-STORM)
iii. transfer cask (HI-TRAC)

Necessary auxiliaries required to deploy the HI-STORM 100 System for storage are:

i. vacuum drying (or other moisture removal) system
ii. helium (He) backfill system with leakage detector
iii. lifting and handling systems
iv welding equipment
v. transfer vehicles/trailer

All MPCs have identical exterior dimensions that render them interchangeable. The outer diameter of the MPC is 68-3/8 inches† and the overall length is 190-1/2 inches. See Section 1.5 for the detailed design drawings. Due to the differing storage contents of each MPC, the maximum loaded weight differs among MPCs. See Table 3.2.1 for each MPC weight. However, the maximum weight of a loaded MPC is approximately 44-1/2 tons. Tables 1.2.1 and 1.2.2 contain the key parameters for the MPCs.

A single, base HI-STORM overpack design is provided which is capable of storing each type of MPC. The overpack inner cavity is sized to accommodate the MPCs. The inner diameter of the overpack inner shell is

† Dimensions discussed in this section are considered nominal values.

73-1/2 inches and the height of the cavity is 191-1/2 inches. The overpack inner shell is provided with channels distributed around the inner cavity to present an inside diameter of 69-1/2 inches. The channels are intended to offer a flexible medium to absorb some of the impact during a non-mechanistic tip-over, while still allowing the cooling air flow through the ventilated overpack. The outer diameter of the overpack is 132-1/2 inches. The overall height of the HI-STORM 100 and the HI-STORM 100S is 239-1/2 inches. There are two versions of the HI-STORM 100S overpack, differing only in height and weight. The HI-STORM 100S(232) is 232 inches high,and the HI-STORM 100S(243) is 243 inches high. The HI-STORM 100s(243) is approximately 10,100 lbs heavier, including concrete. Hereafter in the text, these two versions of the HI-STORM 100S overpack will only be referred to as HI-STORM 100S and will be discussed separately only if the design feature being discussed is different between the two overpacks. See Section 1.5 for drawings. The weight of the overpack without an MPC is approximately 135 tons. See Table 3.2.1 for the detailed weights.

Before proceeding to present detailed physical data on the HI-STORM 100 System, it is of contextual importance to summarize the design attributes which enhance the performance and safety of the system. Some of the principal features of the HI-STORM 100 System which enhance its effectiveness as an SNF storage device and a safe SNF confinement structure are:

- the honeycomb design of the MPC fuel basket;
- the effective distribution of neutron and gamma shielding materials within the system;
- the high heat dissipation capability;
- engineered features to promote convective heat transfer;
- the structural robustness of the steel-concrete-steel overpack construction.

The honeycomb design of the MPC fuel baskets renders the basket into a multi-flange plate weldment where all structural elements (i.e., box walls) are arrayed in two orthogonal sets of plates. Consequently, the walls of the cells are either completely co-planar (i.e., no offset) or orthogonal with each other. There is complete edge-to-edge continuity between the contiguous cells.

Among the many benefits of the honeycomb construction is the uniform distribution of the metal mass of the basket over the entire length of the basket. Physical reasoning suggests that a uniformly distributed mass provides a more effective shielding barrier than can be obtained from a nonuniform basket. In other words, the honeycomb basket is a most effective radiation attenuation device. The complete cell-to-cell connectivity inherent in the honeycomb basket structure provides an uninterrupted heat transmission path, making the MPC an effective heat rejection device.

The composite shell construction in the overpack, steel-concrete-steel, allows ease of fabrication and eliminates the need for the sole reliance on the strength of concrete.

A description of each of the components is provided in the following sections, along with information with respect to its fabrication and safety features. This discussion is supplemented with the full set of drawings in Section 1.5.

1.2.1.1 Multi-Purpose Canisters

The MPCs are welded cylindrical structures as shown in cross sectional views of Figures 1.2.2 through 1.2.4. The outer diameter and cylindrical height of each MPC are fixed. Each spent fuel MPC is an assembly consisting of a honeycombed fuel basket, a baseplate, canister shell, a lid, and a closure ring, as depicted in the MPC cross section elevation view, Figure 1.2.5. The number of spent nuclear fuel storage locations in each of the MPCs depends on the fuel assembly characteristics.

There are seven MPC models, distinguished by the type and number of fuel assemblies authorized for loading. The MPC-24 is designed to store up to 24 intact PWR fuel assemblies. The MPC-24E is designed to store up to 24 total PWR fuel assemblies including up to four (4) damaged PWR fuel assemblies. The MPC-24EF is designed to store up to 24 total PWR fuel assemblies including up to four (4) damaged PWR fuel assemblies or fuel classified as fuel debris. The MPC-68 is designed to store up to 68 total BWR fuel assemblies including up to 68 damaged Dresden Unit 1 or Humboldt Bay BWR fuel assemblies. Damaged BWR fuel assemblies other than Dresden Unit 1 and Humboldt Bay are limited to 16 fuel storage locations in the MPC-68 with the remainder being intact BWR fuel assemblies, up to a total of 68. The MPC-68F is designed to store up to 68 intact or damaged Dresden Unit 1 and Humboldt Bay BWR fuel assemblies. Up to four of the 68 fuel storage locations in the MPC-68F may be Dresden Unit 1 and Humboldt Bay BWR fuel assemblies classified as fuel debris. The MPC-68FF is designed to store up to 68 total BWR fuel assemblies including up to 16 damaged BWR fuel assemblies. Up to eight (8) of the 16 BWR damaged fuel assembly storage locations may be filled with BWR fuel classified as fuel debris. In addition, all fuel loading combinations permitted in the MPC-68F are also permitted in the MPC-68FF. Design Drawings for all of the MPCs are provided in Section 1.5.

The MPC provides the confinement boundary for the stored fuel. Figure 1.2.6 provides an elevation view of the MPC confinement boundary. The confinement boundary is defined by the MPC baseplate, shell, lid, port covers, and closure ring. The confinement boundary is a strength-welded enclosure of all stainless steel construction.

The PWR MPC-24, MPC-24E and MPC-24EF differ in construction from the MPC-32 and the MPC-68 (including the MPC-68F and MPC-68FF) in one important aspect: the fuel storage cells are physically separated from one another by a "flux trap", for criticality control. The PWR MPC-32 is designed similar to the MPC-68 (without flux traps) and its design includes credit for soluble boron in the MPC water during wet fuel loading and unloading operations for criticality control.

The MPC fuel baskets of non-flux trap construction (namely, MPC-68, MPC-68F, MPC-68FF, and MPC-32) are formed from an array of plates welded to each other at their intersections. In the flux-trap

type fuel baskets (MPC-24, MPC-24E, and MPC-24EF), formed angles are interposed onto the orthogonally configured plate assemblage to create the required flux-trap channels (see MPC-24 and MPC-24E design drawings in Section 1.5). In both configurations, two key attributes of the basket are preserved:

i. The cross section of the fuel basket simulates a multi-flanged closed section beam, resulting in extremely high bending rigidity.

ii. The principal structural frame of the basket consists of co-planar plate-type members (i.e., no offset).

This structural feature eliminates the source of severe bending stresses in the basket structure by eliminating the offset between the cell walls that must transfer the inertia load of the stored SNF to the basket/MPC interface during the various postulated accident events (e.g., non-mechanistic tipover, uncontrolled lowering of a cask during on-site transfer, or off-site transport events, etc.).

The MPC fuel basket is positioned and supported within the MPC shell by a set of basket supports welded to the inside of the MPC shell. Between the periphery of the basket, the MPC shell, and the basket supports, optional heat conduction elements may be installed. These heat conduction elements are fabricated from thin aluminum alloy 1100 in shapes and a design that allows a snug fit in the confined spaces and ease of installation. If used, the heat conduction elements are installed along the full length of the MPC basket except at the drain pipe location to create a nonstructural thermal connection that facilitates heat transfer from the basket to shell. In their operating condition, the heat conduction elements contact the MPC shell and basket walls.

Lifting lugs attached to the inside surface of the MPC canister shell serve to permit placement of the empty MPC into the HI-TRAC transfer cask. The lifting lugs also serve to axially locate the MPC lid prior to welding. These internal lifting lugs are not used to handle a loaded MPC. Since the MPC lid is installed prior to any handling of a loaded MPC, there is no access to the lifting lugs once the MPC is loaded.

The top end of the MPC incorporates a redundant closure system. Figure 1.2.6 shows the MPC closure details. The MPC lid is a circular plate (fabricated from one piece, or two pieces - split top and bottom) edge-welded to the MPC outer shell. If the two-piece lid design is employed, only the top piece is analyzed as part of the enclosure vessel pressure boundary. The bottom piece acts as a radiation shield and is attached to the top piece with a non-structural, non-pressure retaining weld. The lid is equipped with vent and drain ports that are utilized to remove moisture and air from the MPC, and backfill the MPC with a specified amount of inert gas (helium). The vent and drain ports are covered and seal welded before the closure ring is installed. The closure ring is a circular ring edge-welded to the MPC shell and lid. The MPC lid provides sufficient rigidity to allow the entire MPC loaded with SNF to be lifted by threaded holes in the MPC lid.

To maintain a constant exterior axial length between the PWR MPCs and the BWR MPCs the thickness of the PWR MPCs' lid is ½inch thinner than the MPC-68s' lid to accommodate the longest PWR fuel assembly which is approximately a ½inch longer than the longest BWR fuel assembly. For fuel assemblies that are shorter than the design basis length, upper and lower fuel spacers (as appropriate) maintain the axial position of the fuel assembly within the MPC basket. The upper fuel spacers are threaded into the underside of the MPC lid as shown in Figure 1.2.5. The lower fuel spacers are placed in the bottom of each fuel basket cell. The upper and lower fuel spacers are designed to withstand normal, off-normal, and accident conditions of storage. An axial clearance of approximately 2 inches is provided to account for the irradiation and thermal growth of the fuel assemblies. The suggested values for the upper and lower fuel spacer lengths are listed in Tables 2.1.9 and 2.1.10 for each fuel assembly type. The actual length of fuel spacers will be determined on a site-specific or fuel assembly-specific basis.

The MPC is constructed entirely from stainless steel alloy materials (except for the neutron absorber and optional aluminum heat conduction elements). No carbon steel parts are permitted in the MPC. Concerns regarding interaction of coated carbon steel materials and various MPC operating environments [1.2.1] are not applicable to the MPC. All structural components in a MPC shall be made of Alloy X, a designation which warrants further explanation.

Alloy X is a material that is expected to be acceptable as a Mined Geological Disposal System (MGDS) waste package and which meets the thermophysical properties set forth in this document.

At this time, there is considerable uncertainty with respect to the material of construction for an MPC that would be acceptable as a waste package for the MGDS. Candidate materials being considered for acceptability by the DOE include:

- Type 316
- Type 316LN
- Type 304
- Type 304LN

The DOE material selection process is primarily driven by corrosion resistance in the potential environment of the MGDS. As the decision regarding a suitable material to meet disposal requirements is not imminent, the MPC design allows the use of any one of the four Alloy X materials.

For the MPC design and analysis, Alloy X (as defined in this FSAR) may be one of the following materials. Only a single alloy from the list of acceptable Alloy X materials may be used in the fabrication of a single MPC basket or shell - the basket and shell may be of different alloys in the same MPC.

- Type 316
- Type 316LN
- Type 304
- Type 304LN

The Alloy X approach is accomplished by qualifying the MPC for all mechanical, structural, neutronic, radiological, and thermal conditions using material thermophysical properties that are the least favorable for the entire group for the analysis in question. For example, when calculating the rate of heat rejection to the outside environment, the value of thermal conductivity used is the lowest for the candidate material group. Similarly, the stress analysis calculations use the lowest value of the ASME Code allowable stress intensity for the entire group. Stated differently, we have defined a material, which is referred to as Alloy X, whose thermophysical properties, from the MPC design perspective, are the least favorable of the candidate materials.

The evaluation of the Alloy X constituents to determine the least favorable properties is provided in Appendix 1 A.

The Alloy X approach is conservative because no matter which material is ultimately utilized in the MPC construction, the Alloy X approach guarantees that the performance of the MPC will exceed the analytical predictions contained in this document.

1.2.1.2 Overpacks

1.2.1.2.1 HI-STORM 100 Overpack (Storage)

The HI-STORM 100 and 100S overpacks are rugged, heavy-walled cylindrical vessels. Figures 1.2.7, 1.2.8, and 1.2.8A provide cross sectional views of the HI-STORM 100 System, showing both of the overpack designs, respectively. The HI-STORM 100A is an anchored variant of the same structure and hereinafter is identified by name only when the discussion specifically applies to the anchored overpack. The HI-STORM 100A differs only in the diameter of the overpack baseplate and the presence of bolt holes and associated anchorage hardware (see Figures 1.1.4 and 1.1.5).The main structural function of the storage overpack is provided by carbon steel, and the main shielding function is provided by plain concrete. The overpack plain concrete is enclosed by cylindrical steel shells, a thick steel baseplate, and a top plate. The overpack lid has appropriate concrete shielding to provide neutron and gamma attenuation in the vertical direction.

The storage overpack provides an internal cylindrical cavity of sufficient height and diameter for housing an MPC. The inner shell of the overpack has channels attached to its inner diameter. The channels provide guidance for MPC insertion and removal and a flexible medium to absorb impact loads during the non-mechanistic tip-over, while still allowing the cooling air flow to circulate through the overpack. Shims may be attached to channels to allow the proper inner diameter dimension to be obtained.

The storage system has air ducts to allow for passive natural convection cooling of the contained MPC. Four air inlets and four air outlets are located at the lower and upper extremities of the storage system, respectively. The location of the air outlets in the HI-STORM 100 and the HI-STORM 100S design differ

in that the outlet ducts for the HI-STORM 100 overpack are located in the overpack body and are aligned vertically with the inlet ducts at the bottom of the overpack body. The air outlet ducts in the HI-STORM 100S are integral to the lid assembly and are not in vertical alignment with the inlet ducts. The location of the air inlet ducts is same for both the HI-STORM 100 and the HI-STORM 100S. The air inlets and outlets are covered by a fine mesh screen to reduce the potential for blockage. Routine inspection of the screens (or, alternatively, temperature monitoring) ensures that blockage of the screens themselves will be detected and removed in a timely manner. Analysis, described in Chapter 11 of this FSAR, evaluates the effects of partial and complete blockage of the air ducts.

The four air inlets and four air outlets are penetrations through the thick concrete shielding provided by the HI-STORM 100 overpack. The outlet air ducts for the HI-STORM 100S overpack, integral to the lid, present a similar break in radial shielding. Within the air inlets and outlets, an array of gamma shield cross plates are installed (see Figure 5.3.19 for a pictorial representation of the gamma shield cross plate designs). These gamma shield cross plates are designed to scatter any particles traveling through the ducts. The result of scattering the particles in the ducts is a significant decrease in the local dose rates around the four air inlets and four air outlets. The configuration of the gamma shield cross plates is such that the increase in the resistance to flow in the air inlets and outlets is minimized. The shielding analysis conservatively credits only the mandatory version of the gamma shield cross plate design because they provide less shielding than the optional design. Conversely, the thermal analysis conservatively evaluates the optional gamma shield cross plate design because it conservatively provides greater resistance to flow than the mandatory design.

Four threaded anchor blocks at the top of the overpack are provided for lifting. The anchor blocks are integrally welded to the radial plates which in turn are full-length welded to the overpack inner shell, outer shell, and baseplate (HI-STORM 100) or the inlet air duct horizontal plates (HI-STORM 100S) (see Figure 1.2.7). The four anchor blocks are located on 90° arcs around the circumference of the overpack. The overpack may also be lifted from the bottom using specially-designed lifting transport devices, including hydraulic jacks, air pads, Hillman rollers, or other design based on site-specific needs and capabilities. Slings or other suitable devices mate with lifting lugs that are inserted into threaded holes in the top surface of the overpack lid to allow lifting of the overpack lid. After the lid is bolted to the storage overpack main body, these lifting bolts shall be removed and replaced with flush plugs.

The plain concrete between the overpack inner and outer steel shells is specified to provide the necessary shielding properties (dry density) and compressive strength. The concrete shall be in accordance with the requirements specified in Appendix 1.D.

The principal function of the concrete is to provide shielding against gamma and neutron radiation. However, in an implicit manner it helps enhance the performance of the HI-STORM overpack in other respects as well. For example, the massive bulk of concrete imparts a large thermal inertia to the HI-STORM overpack, allowing it to moderate the rise in temperature of the system under hypothetical conditions when all ventilation passages are assumed to be blocked. The case of a postulated fire accident at the ISFSI is another example where the high thermal inertia characteristics of the HI-STORM concrete control the temperature of the MPC. Although the annular concrete mass in the overpack shell is not a

structural member, it does act as an elastic/plastic filler of the inter-shell space, such that, while its cracking and crushing under a tip-over accident is not of significant consequence, its deformation characteristics are germane to the analysis of the structural members.

Density and compressive strength are the key parameters which delineate the performance of concrete in the HI-STORM System. The density of concrete used in the inter-shell annulus, pedestal, and HI-STORM lid has been set as defined in Appendix 1.D. For evaluating the physical properties of concrete for completing the analytical models, conservative formulations of Reference [1.0.5] are used.

To ensure the stability of the concrete at temperature, the concrete composition has been specified in accordance with NUREG-1536, "Standard Review Plan for Dry Cask Storage Systems" [1.0.3]. Thermal analyses, presented in Chapter 4, show that the temperatures during normal storage conditions do not threaten the physical integrity of the HI-STORM overpack concrete.

There are two base HI-STORM overpack designs - HI-STORM 100 and HI-STORM 100S. The significant differences between the two are overpack height, MPC pedestal height, location of the air outlet ducts, and the vertical alignment of the inlet and outlet air ducts. The HI-STORM 100 overpack is approximately 240 inches high from the bottom of the baseplate to the top of the lid bolts and 227 inches high without the lid installed. There are two versions of the HI-STORM 100S overpack design, differing only in height and weight. The HI-STORM 100S(232) is approximately 232 inches from the bottom of the baseplate to the top of the lid bolts in its final storage configuration and 211 inches high without the lid installed. The HI-STORM 100S(243) is approximately 243 inches from the bottom of the baseplate to the top of the lid bolts in its final storage configuration and 222 inches high without the lid installed.

The anchored embodiment of the HI-STORM overpack is referred to as HI-STORM 100A. As explained in the foregoing, the HI-STORM overpack is a steel weldment, which makes it a relatively simple matter to extend the overpack baseplate, form lugs, and then anchor the cask to the reinforced concrete structure of the ISFSI. In HI-STORM terminology, these lugs are referred too as "sector lugs. The sector lugs, as shown in Figure 1.1.5 and the drawing in Section 1.5, are formed by extending the HI-STORM overpack baseplate, welding vertical gussets to the baseplate extension and to the overpack outer shell and, finally, welding a horizontal lug support ring in the form of an annular sector to the vertical gussets and to the outer shell. The baseplate is equipped with regularly spaced clearance holes (round or slotted) through which the anchor studs can pass. The sector lugs are bolted to the ISFSI pad using anchor studs that are made of a creep-resistant, high-ductility, environmentally compatible material. The bolts are pre-loaded to a precise axial stress using a "stud tensioner" rather than a torque wrench. Pre-tensioning the anchors using a stud tensioner eliminates any shear stress in the bolt, which is unavoidable if a torquing device is employed (Chapter 3 of the text "Mechanical Design of Heat Exchangers and Pressure Vessel Components", by Arcturus Publishers, 1984, K.P. Singh and A.I. Soler, provides additional information on stud tensioners). The axial stress in the anchors induced by pre-tensioning is kept below 75% of the material yield stress, such that during the seismic event the maximum bolt axial stress remains below the limit prescribed for bolts in the ASME Code, Section III, Subsection NF (for Level D conditions). Figures 1.1.4 and 1.1.5 provide

visual depictions of the anchored HI-STORM 100A configuration. This configuration also applies to the HI-STORM 100SA.

The anchor studs pass through liberal clearance holes (circular or slotted) in the sector lugs (0.75" minimum clearance) such that the fastening of the studs to the ISFSI pad can be carried out without mechanical interference from the body of the sector lug. The two clearance hole configurations give the ISFSI pad designer flexibility in the design of the anchor embedment in the ISFSI concrete. The axial force in the anchors produces a compressive load at the overpack/pad interface. This compressive force, F, imputes a lateral load bearing capacity to the cask/pad interface that is equal to μF ($\mu \leq 0.53$ per Table 2.2.8). As is shown in Chapter 3 of this FSAR, the lateral load-bearing capacity of the HI-STORM/pad interface (μF) is many times greater than the horizontal (sliding) force exerted on the cask under the postulated DBE seismic event. Thus, the potential for lateral sliding of the HI-STORM 100A System during a seismic event is precluded, as is the potential for any bending action on the anchor studs.

The seismic loads, however, will produce an overturning moment on the overpack that would cause a redistribution of the compressive contact pressure between the pad and the overpack. To determine the pulsation in the tensile load in the anchor studs and in the interface contact pressure, bounding static analysis of the preloaded configuration has been performed. The results of the static analysis demonstrate that the initial preloading minimizes pulsations in the stud load. A confirmatory non-linear dynamic analysis has also been performed using the time-history methodology described in Chapter 3, wherein the principal nonlinearities in the cask system are incorporated and addressed. The calculated results from the dynamic analysis confirm the static analysis results and that the presence of pre-stress helps minimize the pulsation in the anchor stud stress levels during the seismic event, thus eliminating any concern with regard to fatigue failure under extended and repetitive seismic excitations.

The sector lugs in HI-STORM 100A are made of the same steel material as the baseplate and the shell (SA516- Gr. 70) which helps ensure high quality fillet welds used to join the lugs to the body of the overpack. The material for the anchor studs can be selected from a family of allowable stud materials listed in the ASME Code (Section II). A representative sampling of permitted materials is listed in Table 1.2.7. The menu of materials will enable the ISFSI owner to select a fastener material that is resistant to corrosion in the local ISFSI environment. For example, for ISFSIs located in marine environments (e.g., coastal reactor sites), carbon steel studs would not be recommended without concomitant periodic inspection and coating maintenance programs. Table 1.2.7 provides the chemical composition of several acceptable fastener materials to help the ISFSI owner select the most appropriate material for his site. The two mechanical properties, ultimate strength σ_u and yield strength σ_y are also listed. For purposes of structural evaluations, the lower bound values of σ_u and σ_y from the menu of materials listed in Table 1.2.7 are used (see Table 3.4.10).

As shown in the drawing, the anchor studs are spaced sufficiently far apart such that a practical reinforced concrete pad with embedded receptacles can be designed to carry the axial pull from the anchor studs without overstressing the enveloping concrete monolith. The design specification and supporting analyses in this FSAR are focused on qualifying the overpack structures, including the sector lugs and the anchor studs.

The design of the ISFSI pad, and its anchor receptacle will vary from site to site, depending on the geology and seismological characteristics of the sub-terrain underlying the ISFSI pad region. The data provided in this FSAR, however, provide the complete set of factored loads to which the ISFSI pad, its sub-grade, and the anchor receptacles must be designed within the purview of ACI-349-97 [1.0.4]. Detailed requirements on the ISFSI pads for anchored casks are provided in Section 2.0.4.

1.2.1.2.2 HI-TRAC (Transfer Cask) - Standard Design

Like the storage overpack, the HI-TRAC transfer cask is a rugged, heavy-walled cylindrical vessel. The main structural function of the transfer cask is provided by carbon steel, and the main neutron and gamma shielding functions are provided by water and lead, respectively. The transfer cask is a steel, lead, steel layered cylinder with a water jacket attached to the exterior. Figure 1.2.9 provides a typical cross section of the standard design HI-TRAC-125 with the pool lid installed. See Section 1.2.1.2.3 for discussion of the optional HI-TRAC 125D design.

The transfer cask provides an internal cylindrical cavity of sufficient size for housing an MPC. The top lid of the HI-TRAC 125has additional neutron shielding to provide neutron attenuation in the vertical direction (from SNF in the MPC below). The MPC access hole through the HI-TRAC top lid is provided to allow the lowering/raising of the MPC between the HI-TRAC transfer cask, and the HI-STORM or HI-STAR overpacks. The standard design HI-TRAC (comprised of HI-TRAC 100 and HI-TRAC 125) is provided with two bottom lids, each used separately. The pool lid is bolted to the bottom flange of the HI-TRAC and is utilized during MPC fuel loading and sealing operations. In addition to providing shielding in the axial direction, the pool lid incorporates a seal that is designed to hold clean demineralized water in the HI-TRAC inner cavity, thereby preventing contamination of the exterior of the MPC by the contaminated fuel pool water. After the MPC has been drained, dried, and sealed, the pool lid is removed and the HI-TRAC transfer lid is attached (standard design only). The transfer lid incorporates two sliding doors that allow the opening of the HI-TRAC bottom for the MPC to be raised/lowered. Figure 1.2.10 provides a cross section of the HI-TRAC with the transfer lid installed.

In the standard design, trunnions are provided for lifting and rotating the transfer cask body between vertical and horizontal positions. The lifting trunnions are located just below the top flange and the pocket trunnions are located above the bottom flange. The two lifting trunnions are provided to lift and vertically handle the HI-TRAC, and the pocket trunnions provide a pivot point for the rotation of the HI-TRAC for downending or upending.

Two standard design HI-TRAC transfer casks of different weights are provided to house the MPCs. The 125 ton HI-TRAC weight does not exceed 125 tons during any loading or transfer operation. The 100 ton HI-TRAC weight does not exceed 100 tons during any loading or transfer operation. The internal cylindrical cavities of the two standard design HI-TRACs are identical. However, the external dimensions are different. The 100ton HI-TRAC has a reduced thickness of lead and water shielding and consequently, the external dimensions are different. The structural steel thickness is identical in the two HI-TRACs. This allows most structural analyses of the 125 ton HI-TRAC to bound the 100 ton HI-TRAC design. Additionally, as the two HI-TRACs are identical except for a reduced thickness of lead and water, the 125 ton HI-TRAC has a

larger thermal resistance than the smaller and lighter 100 ton HI-TRAC. Therefore, for normal conditions the 125 ton HI-TRAC thermal analysis bounds that of the 100 ton HI-TRAC. Separate shielding analyses are performed for each HI-TRAC since the shielding thicknesses are different between the two.

1.2.1.2.3 HI-TRAC 125D Transfer Cask

As an option to using either of the standard HI-TRAC transfer cask design, users may choose to use the optional HI-TRAC 125D design. Figure 1.2.9A provides a typical cross section of the standard design HI-TRAC-125 with the pool lid installed. Like the standard design, the HI-TRAC 125D is designed and constructed in accordance with ASME III, Subsection NF, with certain NRC-approved alternatives, as discussed in Section 2.2.4. Functionally equivalent, the major differences between the HI-TRAC 125D design and the standard design are as follows:

- No pocket trunnions are provided for downending/upending
- The transfer lid is not required
- A new ancillary, the HI-STORM mating device (Figure 1.2.18) is required during MPC transfer operations
- A wider baseplate with attachment points for the mating device is provided
- The baseplate incorporates gussets for added structural strength
- The number of pool lid bolts is reduce

The interface between the MPC and the transfer cask is the same between the standard design and the HI-TRAC 125D design. The optional design is capable of withstanding all loads defined in the design basis for the transfer cask during normal, off-normal, and accident modes of operation with adequate safety margins In lieu of swapping the pool lid for the transfer lid to facilitate MPC transfer, the pool lid remains on the HI-TRAC 125D until MPC transfer is required. The HI-STORM mating device is located between, and secured with bolting to, the top of the HI-STORM overpack and the HI-TRAC 125D transfer cask. The mating device is used to remove the pool lid to provide a pathway for MPC transfer between the overpack and the transfer cask. Section 1.2.2.2 provides additional detail on the differences between the standard transfer cask design and the HI-TRAC 125D design during operations.

1.2.1.3 Shielding Materials

The HI-STORM 100 System is provided with shielding to ensure the radiation and exposure requirements in 10CFR72.104 and 10CFR72.106 are met. This shielding is an important factor in minimizing the personnel doses from the gamma and neutron sources in the SNF in the MPC for ALARA considerations during loading, handling, transfer, and storage. The fuel basket structure of edge-welded composite boxes and Boral neutron poison panels attached to the fuel storage cell vertical surfaces provide the initial attenuation of gamma and neutron radiation emitted by the radioactive spent fuel. The MPC shell, baseplate, lid and closure ring provide additional thicknesses of steel to further reduce the gamma flux at the outer canister surfaces.

In the HI-STORM storage overpack, the primary shielding in the radial direction is provided by concrete and steel. In addition, the storage overpack has a thick circular concrete slab attached to the lid, and a thick circular concrete pedestal upon which the MPC rests. These slabs provide gamma and neutron attenuation in the axial direction. The thick overpack lid and concrete shielding integral to the lid provide additional gamma attenuation in the upward direction, reducing both direct radiation and skyshine. Several steel plate and shell elements provide additional gamma shielding as needed in specific areas, as well as incremental improvements in the overall shielding effectiveness. Gamma shield cross plates, as depicted in Figure 5.3.19, provide attenuation of scattered gamma radiation as it exits the inlet and outlet air ducts.

In the HI-TRAC transfer cask radial direction, gamma and neutron shielding consists of steel-lead-steel and water, respectively. In the axial direction, shielding is provided by the top lid, and the pool or transfer lid, as applicable. In the HI-TRAC pool lid, layers of steel-lead-steel provide an additional measure of gamma shielding to supplement the gamma shielding at the bottom of the MPC. In the transfer lid, layers of steel-lead-steel provide gamma attenuation. For the HI-TRAC 125 transfer lid, the neutron shield material, Holtite-A, is also provided. The HI-TRAC 125 and HI-TRAC 125D top lids are composed of steel-neutron shield-steel, with the neutron shield material being Holtite-A. The HI-TRAC 100 top lid is composed of steel only providing gamma attenuation.

1.2.1.3.1 Boral Neutron Absorber

Boral is a thermal neutron poison material composed of boron carbide and aluminum (aluminum powder and plate). Boron carbide is a compound having a high boron content in a physically stable and chemically inert form. The boron carbide contained in Boral is a fine granulated powder that conforms to ASTM C-750-80 nuclear grade Type III. The Boral cladding is made of alloy aluminum, a lightweight metal with high tensile strength which is protected from corrosion by a highly resistant oxide film. The two materials, boron carbide and aluminum, are chemically compatible and ideally suited for long-term use in the radiation, thermal, and chemical environment of a nuclear reactor, spent fuel pool, or dry cask.

The documented historical applications of Boral, in environments comparable to those in spent fuel pools and fuel storage casks, dates to the early 1950s (the U.S. Atomic Energy Commission's AE-6 Water-Boiler Reactor [1.2.2]). Technical data on the material was first printed in 1949, when the report "Boral: A New Thermal Neutron Shield" was published [1.2.3]. In 1956, the first edition of the Reactor Shielding Design Manual [1.2.4] was published and it contained a section on Boral and its properties.

In the research and test reactors built during the 1950s and 1960s, Boral was frequently the material of choice for control blades, thermal-column shutters, and other items requiring very good thermal-neutron absorption properties. It is in these reactors that Boral has seen its longest service in environments comparable to today's applications.

Boral found other uses in the 1960s, one of which was a neutron poison material in baskets used in the shipment of irradiated, enriched fuel rods from Canada's Chalk River laboratories to Savannah River. Use of Boral in shipping containers continues, with Boral serving as the poison in current British Nuclear Fuels

Limited casks and the Storable Transport Cask by Nuclear Assurance Corporation [1.2.5].

Boral has been licensed by the NRC for use in numerous BWR and PWR spent fuel storage racks and has been extensively used in international nuclear installations.

Boral has been exclusively used in fuel storage applications in recent years. Its use in spent fuel pools as the neutron absorbing material can be attributed to its proven performance and several unique characteristics, such as:

- The content and placement of boron carbide provides a very high removal cross section for thermal neutrons.
- Boron carbide, in the form of fine particles, is homogeneously dispersed throughout the central layer of the Boral panels.
- The boron carbide and aluminum materials in Boral do not degrade as a result of long-term exposure to radiation.
- The neutron absorbing central layer of Boral is clad with permanently bonded surfaces of aluminum.
- Boral is stable, strong, durable, and corrosion resistant.

Boral absorbs thermal neutrons without physical change or degradation of any sort from the anticipated exposure to gamma radiation and heat. The material does not suffer loss of neutron attenuation capability when exposed to high levels of radiation dose.

Holtec International's QA Program ensures that Boral is manufactured under the control and surveillance of a Quality Assurance/Quality Control Program that conforms to the requirements of 10CFR72, Subpart G. Holtec International has procured over 200,000 panels of Boral from AAR Advanced Structures in over 30 projects. Boral has always been purchased with a minimum ^{10}B loading requirement. Coupons extracted from production runs were tested using the wet chemistry procedure. The actual ^{10}B loading, out of thousands of coupons tested, has never been found to fall below the design specification. The size of this coupon database is sufficient to provide reasonable assurance that all future Boral procurements will continue to yield Boral with full compliance with the stipulated minimum loading. Furthermore, the surveillance, coupon testing, and material tracking processes which have so effectively controlled the quality of Boral are expected to continue to yield Boral of similar quality in the future. Nevertheless, to add another layer of insurance, only 75% ^{10}B credit of the fixed neutron absorber is assumed in the criticality analysis consistent with Chapter 6.0, IV, 4.c of NUREG-1536, Standard Review Plan for Dry Cask Storage Systems.

1.2.1.3.2 Neutron Shielding

The specification of the HI-STORM overpack and HI-TRAC transfer cask neutron shield material is predicated on functional performance criteria. These criteria are:

- Attenuation of neutron radiation to appropriate levels;
- Durability of the shielding material under normal conditions, in terms of thermal, chemical, mechanical, and radiation environments;
- Stability of the homogeneous nature of the shielding material matrix;
- Stability of the shielding material in mechanical or thermal accident conditions to the desired performance levels; and
- Predictability of the manufacturing process under adequate procedural control to yield an in-place neutron shield of desired function and uniformity.

Other aspects of a shielding material, such as ease of handling and prior nuclear industry use, are also considered, within the limitations of the main criteria. Final specification of a shield material is a result of optimizing the material properties with respect to the main criteria, along with the design of the shield system, to achieve the desired shielding results.

Neutron attenuation in the HI-STORM overpack is provided by the thick walls of concrete contained in the steel vessel, lid, and pedestal. Concrete is a shielding material with a long proven history in the nuclear industry. The concrete composition has been specified to ensure its continued integrity at the long term temperatures required for SNF storage.

The HI-TRAC transfer cask is equipped with a water jacket providing radial neutron shielding. Demineralized water will be utilized in the water jacket. To ensure operability for low temperature conditions, ethylene glycol (25% in solution) will be added to reduce the freezing point for low temperature operations (e.g., below 32 F) [1.2.7].

Neutron shielding in the HI-TRAC 125 and 125D transfer casks in the axial direction is provided by Holtite-A within the top lid. HI-TRAC 125 also contains Holtite-A in the transfer lid. Holtite-A is a poured-in-place solid borated synthetic neutron-absorbing polymer. Holtite-A is specified with a nominal B_4C loading of 1 weight percent for the HI-STORM 100 System. Appendix 1.B provides the Holtite-A material properties germane to its function as a neutron shield. Holtec has performed confirmatory qualification tests on Holtite-A under the company's QA program.

In the following, a brief summary of the performance characteristics and properties of Holtite-A is provided.

Density

The specific gravity of Holtite-A is 1.68 g/cm^3 as specified in Appendix 1.B. To conservatively bound any potential weight loss at the design temperature and any inability to reach the theoretical density, the density is reduced by 4% to 1.61 g/cm^3. The density used for the shielding analysis is conservatively assumed to be 1.61 g/cm^3 to underestimate the shielding capabilities of the neutron shield.

Hydrogen

The weight concentration of hydrogen is 6.0%. However, all shielding analyses conservatively assume 5.9% hydrogen by weight in the calculations.

Boron Carbide

Boron carbide dispersed within Holtite-A in finely dispersed powder form is present in 1% (nominal) weight concentration. Holtite-A may be specified with a B_4C content of up to 6.5 weight percent. For the HI-STORM 100 System, Holtite-A is specified with a nominal B_4C weight percent of 1%.

Design Temperature

The design temperature of Holtite-A is set at 300 -A under all normal operating conditions must be demonstrated to be below this design temperature.

Thermal Conductivity

The Holtite-A neutron shielding material is stable below the design temperature for the long term and provides excellent shielding properties for neutrons. A conservative, lower bound conductivity is stipulated for use in the thermal analyses of Chapter 4 (Section 4.2) based on information in the technical literature.

1.2.1.3.3 Gamma Shielding Material

For gamma shielding, the HI-STORM 100 storage overpack primarily relies on massive concrete sections contained in a robust steel vessel. A carbon steel plate, the shield shell, is located adjacent to the overpack inner shell to provide additional gamma shielding (Figure 1.2.7)[†]. Carbon steel supplements the concrete gamma shielding in most portions of the storage overpack, most notably the baseplate and the lid. To reduce the radiation streaming through the overpack air inlets and outlets, gamma shield cross plates are

[†] The shield shell design feature was deleted in June, 2001 after overpack serial number 7 was fabricated Those overpacks without the shield shell are required to have a higher concrete density in the overpack body to provide compensatory shielding See Table 1.D.1.

installed in the ducts (Figures 1.2.8 and 1.2.8A) to scatter the radiation. This scattering acts to significantly reduce the local dose rates adjacent to the overpack air inlets and outlets.

In the HI-TRAC transfer cask, the primary gamma shielding is provided by lead. As in the storage overpack, carbon steel supplements the lead gamma shielding of the HI-TRAC transfer cask.

1.2.1.4 Lifting Devices

Lifting of the HI-STORM 100 System may be accomplished either by attachment at the top of the storage overpack ("top lift"), as would typically be done with a crane, or by attachment at the bottom ("bottom lift"), as would be effected by a number of lifting/handling devices.

For a top lift, the storage overpack is equipped with four threaded anchor blocks arranged circumferentially around the overpack. These anchor blocks are used for overpack lifting as well as securing the overpack lid to the overpack body. The anchor blocks are integrally welded to the overpack radial plates which in turn are full-length welded to the overpack inner shell, outer shell, and baseplate (HI-STORM100) or inlet air duct horizontal plates (HI-STORM 100S). The storage overpack may be lifted with a lifting device that engages the anchor blocks with threaded studs and connects to a crane or similar equipment.

A bottom lift of the HI-STORM 100 storage overpack is effected by the insertion of four hydraulic jacks underneath the inlet vent horizontal plates (Figure 1.2.1). A slot in the overpack baseplate allows the hydraulic jacks to be placed underneath the inlet vent horizontal plate. The hydraulic jacks lift the loaded overpack to provide clearance for inserting or removing a device for transportation.

The standard design HI-TRAC transfer cask is equipped with two lifting trunnions and two pocket trunnions. The HI-TRAC 125D is equipped with only lifting trunnions. The lifting trunnions are positioned just below the top forging. The two pocket trunnions are located above the bottom forging and attached to the outer shell. The pocket trunnions are designed to allow rotation of the HI-TRAC. All trunnions are built from a high strength alloy with proven corrosion and non-galling characteristics. The lifting trunnions are designed in accordance with NUREG-0612 and ANSI N14 6. The lifting trunnions are installed by threading into tapped holes just below the top forging.

The top of the MPC lid is equipped with four threaded holes that allow lifting of the loaded MPC. These holes allow the loaded MPC to be raised/lowered through the HI-TRAC transfer cask using lifting cleats. The threaded holes in the MPC lid are designed in accordance with NUREG-0612 and ANSI N14.6.

1.2.1.5 Design Life

The design life of the HI-STORM 100 System is 40 years. This is accomplished by using material of construction with a long proven history in the nuclear industry and specifying materials known to withstand their operating environments with little to no degradation. A maintenance program, as specified in Chapter 9, is also implemented to ensure the HI-STORM 100 System will exceed its design life of 40 years. The

design considerations that assure the HI-STORM 100 System performs as designed throughout the service life include the following:

HI-STORM Overpack and HI-TRAC Transfer Cask

- Exposure to Environmental Effects
- Material Degradation
- Maintenance and Inspection Provisions

MPC

- Corrosion
- Structural Fatigue Effects
- Maintenance of Helium Atmosphere
- Allowable Fuel Cladding Temperatures
- Neutron Absorber Boron Depletion

The adequacy of the HI-STORM 100 System for its design life is discussed in Sections 3.4.11 and 3.4.12.

1.2.2 Operational Characteristics

1.2.2.1 Design Features

The HI-STORM 100 System incorporates some unique design improvements. These design innovations have been developed to facilitate the safe long term storage of SNF. Some of the design originality is discussed in Subsection 1.2.1 and below.

The free volume of the MPCs is inerted with 99.995% pure helium gas during the spent nuclear fuel loading operations. Table 1.2.2 specifies the helium fill requirements for the MPC internal cavity.

The HI-STORM overpack has been designed to synergistically combine the benefits of steel and concrete. The steel-concrete-steel construction of the HI-STORM overpack provides ease of fabrication, increased strength, and an optimal radiation shielding arrangement. The concrete is primarily provided for radiation shielding and the steel is primarily provided for structural functions.

The strength of concrete in tension and shear is conservatively neglected. Only the compressive strength of the concrete is accounted for in the analyses.

The criticality control features of the HI-STORM 100 are designed to maintain the neutron multiplication factor k-effective (including uncertainties and calculational bias) at less than 0.95 under all normal, off-normal, and accident conditions of storage as analyzed in Chapter 6. This level of conservatism and safety margins is maintained, while providing the highest storage capacity.

1.2.2.2 Sequence of Operations

Table 1.2.6 provides the basic sequence of operations necessary to defuel a spent fuel pool using the HI-STORM 100 System. The detailed sequence of steps for storage-related loading and handling operations is provided in Chapter 8 and is supported by the Design Drawings in Section 1.5. A summary of the general actions needed for the loading and unloading operations is provided below. Figures 1.2.16 and 1.2.17 provide a pictorial view of typical loading and unloading operations, respectively.

Loading Operations

At the start of loading operations, the HI-TRAC transfer cask is configured with the pool lid installed. The HI-TRAC water jacket is filled with demineralized water or a 25% ethylene glycol solution depending on the ambient temperature conditions. The lift yoke is used to position HI-TRAC in the designated preparation area or setdown area for HI-TRAC inspection and MPC insertion. The annulus is filled with plant demineralized water (borated if necessary), and an inflatable annulus seal is installed. The inflatable seal prevents contact between spent fuel pool water and the MPC shell reducing the possibility of contaminating the outer surfaces of the MPC. The MPC is then filled with water. Based on the MPC model and fuel enrichment (as required by the CoC), this may be borated water or plant demineralized water. HI-TRAC and the MPC are lowered into the spent fuel pool for fuel loading using the lift yoke. Pre-selected assemblies are loaded into the MPC and a visual verification of the assembly identification is performed.

While still underwater, a thick shielding lid (the MPC lid) is installed. The lift yoke is remotely engaged to the HI-TRAC lifting trunnions and is used to lift the HI-TRAC close to the spent fuel pool surface. As an ALARA measure, dose rates are measured on the top of the HI-TRAC and MPC prior to removal from the pool to check for activated debris on the top surface. The MPC lift bolts (securing the MPC lid to the lift yoke) are removed. As HI-TRAC is removed from the spent fuel pool, the lift yoke and HI-TRAC are sprayed with demineralized water to help remove contamination.

HI-TRAC is removed from the pool and placed in the designated preparation area. The top surfaces of the MPC lid and the upper flange of HI-TRAC are decontaminated. The inflatable annulus seal is removed, and an annulus shield is installed. The annulus shield provides additional personnel shielding at the top of the annulus and also prevents small items from being dropped into the annulus. Dose rates are measured at the MPC lid and around the mid-height circumference of HI-TRAC to ensure that the dose rates are within expected values. The Automated Welding System baseplate shield (if used) is installed to reduce dose rates around the top of the cask. The MPC water level is lowered slightly and the MPC lid is seal-welded using the Automated Welding System (AWS) or other approved welding process. Liquid penetrant examinations are performed on the root and final passes. A multi-layer liquid penetrant or volumetric examination is also performed on the MPC lid-to-shell weld. The water level is raised to the top of the MPC and the weld is hydrostatically tested. Then a small volume of the water is displaced with helium gas. The helium gas is used for leakage testing. A helium leakage rate test is performed on the MPC lid confinement weld (lid-to-shell) to verify weld integrity and to ensure that leakage rates are within acceptance criteria. The MPC water is

displaced from the MPC by blowing pressurized helium or nitrogen gas into the vent port of the MPC, thus displacing the water through the drain line.

For storage of moderate burnup fuel, a Vacuum Drying System (VDS) may be used to remove moisture from the MPC cavity. The VDS is connected to the MPC and is used to remove liquid water from the MPC in a stepped evacuation process. The stepped evacuation process is used to preclude the formation of ice in the MPC and Vacuum Drying System lines. The internal pressure is reduced and held for a duration to ensure that all liquid water has evaporated. This process is continued until the pressure in the MPC meets the technical specification limit and can be held there for the required amount of time.

For storage of high burnup fuel and as an option for storage of moderate burnup fuel, the reduction of residual moisture in the MPC to trace amounts is accomplished using a Forced Helum Dehydration (FHD) system, as described in Appendix 2.B. Relatively warm and dry helium is recirculated through the MPC cavity, which helps maintain the SNF in a cooled condition while moisture is being removed. The warm, dry gas is supplied to the MPC drain port and circulated through the MPC cavity where it absorbs moisture. The humidified gas travels out of the MPC and through appropriate equipment to cool and remove the absorbed water from the gas. The dry gas may be heated prior to its return to the MPC in a closed loop system to accelerate the rate of moisture removal in the MPC. This process is continued until the temperature of the gas exiting the demoisturizing module described in Appendix 2.B meets the limit specified in the technical specifications.

Following moisture removal, the VDS or FHD system is disconnected and the Helium Backfill System (HBS) is attached and the MPC is backfilled with a predetermined amount of helium gas. The helium backfill ensures adequate heat transfer during storage, provides an inert atmosphere for long-term fuel integrity, and provides the means of future leakage rate testing of the MPC confinement boundary welds. Cover plates are installed and seal-welded over the MPC vent and drain ports with liquid penetrant examinations performed on the root and final passes. The cover plates are helium leakage tested to confirm that they meet the established leakage rate criteria.

The MPC closure ring is then placed on the MPC, aligned, tacked in place, and seal welded, providing redundant closure of the MPC lid and cover plates confinement closure welds. Tack welds are visually examined, and the root and final welds are inspected using the liquid penetrant examination technique to ensure weld integrity. The annulus shield is removed and the remaining water in the annulus is drained. The AWS Baseplate shield is removed. The MPC lid and accessible areas of the top of the MPC shell are smeared for removable contamination and HI-TRAC dose rates are measured. The HI-TRAC top lid is installed and the bolts are torqued. The MPC lift cleats are installed on the MPC lid. The MPC lift cleats are the primary lifting point of the MPC.

Rigging is installed between the MPC lift cleats and the lift yoke. . The rigging supports the MPC within HI-TRAC while the pool lid is replaced with the transfer lid. For the standard design transfer cask, the HI-TRAC is manipulated to replace the pool lid with the transfer lid. The MPC lift cleats and rigging support the MPC during the transfer operations.

MPC transfer from the HI-TRAC transfer cask into the overpack may be performed inside or outside the fuel building. Similarly, HI-TRAC and HI-STORM may be transferred to the ISFSI in several different ways. The loaded HI-TRAC may be handled in the vertical or horizontal orientation. The loaded HI-STORM can only be handled vertically.

For MPC transfers inside the fuel building, the empty HI-STORM overpack is inspected and staged with the lid removed, the alignment device positioned, and, for the HI-STORM 100 overpack, the vent duct shield inserts installed. If using HI-TRAC 125D, the HI-STORM mating device is secured to the top of the empty overpack (Figure 1.2.18). The loaded HI-TRAC is placed using the fuel building crane on top of HI-STORM, or the mating device, as applicable. After the HI-TRAC is positioned atop the HI-STORM or secured to the mating device, as applicable, the MPC is raised slightly. With the standard HI-TRAC design, the transfer lid door locking pins are removed and the doors are opened. With the HI-TRAC 125D, the pool lid is removed using the mating device. The MPC is lowered into HI-STORM. Following verification that the MPC is fully lowered, slings are disconnected and lowered onto the MPC lid. For the HI-STORM 100, the doors are closed and the HI-TRAC is prepared for removal from on top of HI-STORM (with HI-TRAC 125D, the transfer cask must first be disconnected from the mating device). For the HI-STORM 100S, the standard design HI-TRAC may need to be lifted above the overpack to a height sufficient to allow closure of the transfer lid doors without interfering with the MPC lift cleats. The HI-TRAC is then removed and placed in its designated storage location. The MPC lift cleats and slings are removed from atop the MPC. The alignment device, vent duct shield inserts, and/or mating device is/are removed, as applicable. The pool lid is removed from the mating device and re-attached to the HI-TRAC 125D prior to its next use. The HI-STORM lid is installed, and the upper vent screens and gamma shield cross plates are installed. The HI-STORM lid studs are installed and torqued.

For MPC transfers outside of the fuel building, the empty HI-STORM overpack is inspected and staged with the lid removed, the alignment device positioned, and, for the HI-STORM 100, the vent duct shield inserts installed. For HI-TRAC 125D, the mating device is secured to the top of the overpack. The loaded HI-TRAC is transported to the cask transfer facility in the vertical or horizontal orientation. A number of methods may be utilized as long as the handling limitations prescribed in the technical specifications are not exceeded.

To place the loaded HI-TRAC in a horizontal orientation, a transport frame or "cradle" is utilized. If the cradle is equipped with rotation trunnions they are used to engage the HI-TRAC 100 or 125 pocket trunnions. While the loaded HI-TRAC is lifted by the lifting trunnions, the HI-TRAC is lowered onto the cradle rotation trunnions. Then, the crane lowers and the HI-TRAC pivots around the pocket trunnions and is placed in the horizontal position in the cradle.

The HI-TRAC 125D does not include pocket trunnions in its design. Therefore, the user must downend the transfer cask onto the transport frame using appropriately designed rigging in accordance with the site's heavy load control program.

If the loaded HI-TRAC is transferred to the cask transfer facility in the horizontal orientation, the HI-TRAC transport frame and/or cradle are placed on a transport vehicle. The transport vehicle may be an air pad, railcar, heavy-haul trailer, dolly, etc. If the loaded HI-TRAC is transferred to the cask transfer facility in the vertical orientation, the HI-TRAC may be lifted by the lifting trunnions or seated on the transport vehicle. During the transport of the loaded HI-TRAC, standard plant heavy load handling practices shall be applied including administrative controls for the travel path and tie-down mechanisms.

After the loaded HI-TRAC arrives at the cask transfer facility, the HI-TRAC is upended by a crane if the HI-TRAC is in a horizontal orientation. The loaded HI-TRAC is then placed, using the crane located in the transfer area, on top of HI-STORM, which has been inspected and staged with the lid removed, vent duct shield inserts installed, the alignment device positioned, and the mating device installed, as applicable.

After the HI-TRAC is positioned atop the HI-STORM or the mating device, the MPC is raised slightly. In the standard design, the transfer lid door locking pins are removed and the doors are opened. With the HI-TRAC 125D, the pool lid is removed using the mating device. The MPC is lowered into HI-STORM. Following verification that the MPC is fully lowered, slings are disconnected and lowered onto the MPC lid. For the HI-STORM 100, the doors are closed and HI-TRAC is removed from on top of HI-STORM or disconnected from the mating device, as applicable. For the HI-STORM 100S, the standard design HI-TRAC may need to be lifted above the overpack to a height sufficient to allow closure of the transfer lid doors without interfering with the MPC lift cleats. The HI-TRAC is then removed and placed in its designated storage location. The MPC lift cleats and slings are removed from atop the MPC. The alignment device, vent duct shield inserts, and mating device is/are removed, as applicable. The pool lid is removed from the mating device and re-attached to the HI-TRAC 125D prior to its next use. The HI-STORM lid is installed, and the upper vent screens and gamma shield cross plates are installed. The HI-STORM lid studs and nuts are installed..

After the HI-STORM has been loaded either within the fuel building or at a dedicated cask transfer facility, the HI-STORM is then moved to its designated position on the ISFSI pad. The HI-STORM overpack may be moved using a number of methods as long as the handling limitations listed in the technical specifications are not exceeded. The loaded HI-STORM must be handled in the vertical orientation, and may be lifted from the top by the anchor blocks or from the bottom by the inlet vents. After the loaded HI-STORM is lifted, it may be placed on a transport mechanism or continue to be lifted by the lid studs and transported to the storage location. The transport mechanism may be an air pad, crawler, railcar, heavy-haul trailer, dolly, etc. During the transport of the loaded HI-STORM, standard plant heavy load handling practices shall be applied including administrative controls for the travel path and tie-down mechanisms. Once in position at the storage pad, vent operability testing is performed to ensure that the system is functioning within its design parameters.

In the case of HI-STORM 100A, the anchor studs are installed and fastened into the anchor receptacles in the ISFSI pad in accordance with the design requirements.

Unloading Operations

The HI-STORM 100 System unloading procedures describe the general actions necessary to prepare the MPC for unloading, cool the stored fuel assemblies in the MPC, flood the MPC cavity, remove the lid welds, unload the spent fuel assemblies, and recover HI-TRAC and empty the MPC. Special precautions are outlined to ensure personnel safety during the unloading operations, and to prevent the risk of MPC overpressurization and thermal shock to the stored spent fuel assemblies.

The MPC is recovered from HI-STORM either at the cask transfer facility or the fuel building using any of the methodologies described in Section 8.1. The HI-STORM lid is removed, the alignment device positioned, and, for the HI-STORM 100, the vent duct shield inserts are installed, and the MPC lift cleats are attached to the MPC. For HI-TRAC 125D, the mating device is installed. Rigging is attached to the MPC lift cleats. For the HI-STORM 100S and the standard HI-TRAC design, the transfer doors may need to be opened to avoid interfering with the MPC lift cleats. For HI-TRAC 125D, the mating device (possibly containing the pool lid) is secured to the top of the overpack. HI-TRAC is raised and positioned on top of HI-STORM or secured to the mating device, as applicable. For HI-TRAC 125D, the pool lid is ensured to be out of the transfer path for the MPC. The MPC is raised into HI-TRAC. Once the MPC is raised into HI-TRAC, the standard design HI-TRAC transfer lid doors are closed and the locking pins are installed. For HI-TRAC 125D, the pool lid is installed and the transfer cask is unsecured from the mating device. HI-TRAC is removed from on top of HI-STORM.

The HI-TRAC is brought into the fuel building and, for the standard design, manipulated for bottom lid replacement. The transfer lid is replaced with the pool lid. The MPC lift cleats and rigging support the MPC during lid transfer operations.

HI-TRAC and its enclosed MPC are returned to the designated preparation area and the rigging, MPC lift cleats, and HI-TRAC top lid are removed. The annulus is filled with plant demineralized water(borated, if necessary). The annulus and HI-TRAC top surfaces are protected from debris that will be produced when removing the MPC lid.

The MPC closure ring and vent and drain port cover plates are core drilled. Local ventilation is established around the MPC ports. The RVOAs are attached to the vent and drain port. The RVOAs allow access to the inner cavity of the MPC, while providing a hermetic seal. The MPC is cooled using a closed-loop heat exchanger to reduce the MPC internal temperature to allow water flooding. Following the fuel cool-down, the MPC is flooded with borated or unborated water in accordance with the CoC. The MPC lid-to-MPC shell weld is removed. Then, all weld removal equipment is removed with the MPC lid left in place.

The MPC lid is rigged to the lift yoke and the lift yoke is engaged to HI-TRAC lifting trunnions. If weight limitations require, the neutron shield jacket is drained. HI-TRAC is placed in the spent fuel pool and the MPC lid is removed. All fuel assemblies are returned to the spent fuel storage racks and the MPC fuel cells are vacuumed to remove any assembly debris. HI-TRAC and MPC are returned to the designated preparation area where the MPC water is removed. The annulus water is drained and the MPC and HI-TRAC are decontaminated in preparation for re-utilization.

1.2.2.3 Identification of Subjects for Safety and Reliability Analysis

1.2.2.3.1 Criticality Prevention

Criticality is controlled by geometry and neutron absorbing materials in the fuel basket. The MPC-24, MPC-24E, and 24EF(all with lower enriched fuel) and the MPC-68 do not rely on soluble boron credit during loading or the assurance that water cannot enter the MPC during storage to meet the stipulated criticality limits.

Each MPC model is equipped with Boral neutron absorber plates affixed to the fuel cell walls as shown on the design drawings. The minimum ^{10}B areal density specified for the Boral in each MPC model is shown in Table 1.2.2. These values are chosen to be consistent with the assumptions made in the criticality analyses.

The MPC-24, MPC-24E and 24EF(all with higher enriched fuel) and the MPC-32 take credit for soluble boron in the MPC water for criticality prevention during wet loading and unloading operations. Boron credit is only necessary for these PWR MPCs during loading and unloading operations that take place under water. During storage, with the MPC cavity dry and sealed from the environment, criticality control measures beyond the fixed neutron poisons affixed to the storage cell walls are not necessary because of the low reactivity of the fuel in the dry, helium filled canister and the design features that prevent water from intruding into the canister during storage.

1.2.2.3.2 Chemical Safety

There are no chemical safety hazards associated with operations of the HI-STORM 100 dry storage system. A detailed evaluation is provided in Section 3.4.

1.2.2.3.3 Operation Shutdown Modes

The HI-STORM 100 System is totally passive and consequently, operation shutdown modes are unnecessary. Guidance is provided in Chapter 8, which outlines the HI-STORM 100 unloading procedures, and Chapter 11, which outlines the corrective course of action in the wake of postulated accidents.

1.2.2.3.4 Instrumentation

As stated earlier, the HI-STORM 100 confinement boundary is the MPC, which is seal welded and leak tested. The HI-STORM 100 is a completely passive system with appropriate margins of safety; therefore, it is not necessary to deploy any instrumentation to monitor the cask in the storage mode. At the option of the user, temperature elements may be utilized to monitor the air temperature of the HI-STORM overpack exit vents in lieu of routinely inspecting the ducts for blockage. See Subsection 2.3.3.2 and the Technical Specifications in Appendix A to the CoC for additional details.

1.2.2.3.5 Maintenance Technique

Because of their passive nature, the HI-STORM 100 System requires minimal maintenance over its lifetime. No special maintenance program is required. Chapter 9 describes the acceptance criteria and maintenance program set forth for the HI-STORM 100.

1.2.3 Cask Contents

The HI-STORM 100 System is designed to house different types of MPCs. The MPCs are designed to store both BWR and PWR spent nuclear fuel assemblies. Tables 1.2.1 and 1.2.2 provide key design parameters for the MPCs. A description of acceptable fuel assemblies for storage in the MPCs is provided in Section 2.1 and the Approved Contents section of Appendix B to the CoC. This includes fuel assemblies classified as damaged fuel assemblies and fuel debris in accordance with the definitions of these terms in the CoC. A summary of the types of fuel authorized for storage in each MPC model is provided below. All fuel assemblies must meet the fuel specifications provided in Appendix B to the CoC. All fuel assemblies classified as damaged fuel or fuel debris must be stored in damaged fuel containers.

MPC-24

The MPC-24 is designed to accommodate up to twenty-four (24) PWR fuel assemblies classified as intact fuel assemblies, with or without non-fuel hardware.

MPC-24E

The MPC-24E is designed to accommodate up to twenty-four (24) PWR fuel assemblies, with or without non-fuel hardware. Up to four (4) fuel assemblies may be classified as damaged fuel assemblies, with the balance being classified as intact fuel assemblies. Damaged fuel assemblies must be stored in fuel storage locations 3, 6, 19, and/or 22 (see Figure 1.2.4).

MPC-24EF

The MPC-24EF is designed to accommodate up to twenty-four (24) PWR fuel assemblies, with or without non-fuel hardware. Up to four (4) fuel assemblies may be classified as damaged fuel assemblies or fuel

debris, with the balance being classified as intact fuel assemblies. Damaged fuel assemblies and fuel debris must be stored in fuel storage locations 3, 6, 19, and/or 22 (see Figure 1.2.4).

MPC-32

The MPC-32 is designed to accommodate up to thirty-two (32) PWR fuel assemblies classified as intact fuel assemblies, with or without non-fuel hardware.

MPC-68

The MPC-68 is designed to accommodate up to sixty-eight (68) BWR intact and/or damaged fuel assemblies, with or without channels. For the Dresden Unit 1 or Humboldt Bay plants, the number of damaged fuel assemblies may be up to a total of 68. For damaged fuel assemblies from plants other than Dresden Unit 1 and Humboldt Bay, the number of damaged fuel assemblies is limited to sixteen (16) and must be stored in fuel storage locations 1, 2, 3, 8, 9, 16, 25, 34, 35, 44, 53, 60, 61, 66, 67, and/or 68 (see Figure 1.2.2).

MPC-68F

The MPC-68F is designed to accommodate up to sixty-eight (68) Dresden Unit 1 or Humboldt Bay BWR fuel assemblies (with or without channels) made up of any combination of fuel assemblies classified as intact fuel assemblies, damaged fuel assemblies, and up to four (4) fuel assemblies classified as fuel debris.

MPC-68FF

The MPC-68FF is designed to accommodate up to sixty-eight (68) BWR fuel assemblies with or without channels. Any number of these fuel assemblies may be Dresden Unit 1 or Humboldt Bay BWR fuel assemblies classified as intact fuel or damaged fuel. Dresden Unit 1 and Humboldt Bay fuel debris is limited to eight (8) DFCs. DFCs containing Dresden Unit 1 or Humboldt Bay fuel debris may be stored in any fuel storage location For BWR fuel assemblies from plants other than Dresden Unit 1 and Humboldt Bay, the total number of fuel assemblies classified as damaged fuel assemblies or fuel debris is limited to sixteen (16), with up to eight (8) of the 16 fuel assemblies classified as fuel debris. These fuel assemblies must be stored in fuel storage locations 1, 2, 3, 8, 9, 16, 25, 34, 35, 44, 53, 60, 61, 66, 67, and/or 68 (see Figure 1.2.2). The balance of the fuel storage locations may be filled with intact BWR fuel assemblies, up to a total of 68.

Table 1.2.1

KEY SYSTEM DATA FOR HI-STORM 100 SYSTEM

ITEM	QUANTITY	NOTES
Types of MPCs included in this revision of the submittal	7	4 for PWR 3 for BWR
MPC storage capacity†:	MPC-24 MPC-24E MPC-24EF	Up to 24 intact Zircaloy or stainless steel clad PWR fuel assemblies with or without non-fuel hardware. Up to four damaged fuel assemblies may be stored in the MPC-24E and up to four (4)damaged fuel assemblies and/or fuel assemblies classified as fuel debris may be stored in the MPC-24EF OR
	MPC-32	Up to 32 intact Zircaloy or stainless steel clad PWR fuel assemblies.
	MPC-68	Any combination of Dresden Unit 1 or Humboldt Bay damaged fuel assemblies in damaged fuel containers and intact fuel assemblies, up to a total of 68. For damaged fuel other than Dresden Unit 1 and Humboldt Bay, the number of fuel assemblies is limited to 16, with the balance being intact fuel assemblies. OR

† See Section 1 2.3 and Appendix B to the CoC for a complete description of cask contents and fuel specifications, respectively.

Table 1.2.1 (continued)
KEY SYSTEM DATA FOR HI-STORM 100 SYSTEM

ITEM	QUANTITY	NOTES
MPC storage capacity:	MPC-68F	Up to 4 damaged fuel containers with Zircaloy clad Dresden Unit 1 (D-1) or Humboldt Bay (HB) BWR fuel debris and the complement damaged Zircaloy clad Dresden Unit 1 or Humboldt Bay BWR fuel assemblies in damaged fuel containers or intact Dresden Unit 1 or Humboldt Bay BWR intact fuel assemblies. OR
	MPC-68FF	Up to 68 Dresden Unit 1 or Humboldt Bay intact fuel or damaged fuel and up to 8 damaged fuel containers containing D-1 or HB fuel debris. For other BWR plants, up to 16 damaged fuel containers containing BWR damaged fuel and/or fuel debris with the complement intact fuel assemblies, up to a total of 68. The number of damaged fuel containers containing BWR fuel debris is limited to eight (8) for all BWR plants.

Table 1.2 2

KEY PARAMETERS FOR HI-STORM 100 MULTI-PURPOSE CANISTERS

	PWR	BWR
Pre-disposal service life (years)	40	40
Design temperature, max./min. (°F)	725°†/-40°††	725°†/-40°††
Design internal pressure (psig) Normal conditions Off-normal conditions Accident Conditions	 100 100 200	 100 100 200
Total heat load, max. (kW)	27.77 (MPC-24) 28.17 (MPC-24E & MPC-24EF) 28.74 (MPC-32)	28.19 (MPC-68, MPC-68F, & MPC-68FF)
Maximum permissible peak fuel cladding temperature: Normal (F) Short Term & Accident (F)	 See Table 2.2.3 1058°	 See Table 2.2 3 1058°
MPC internal environment Helium fill	29.3 – 33 3 psig OR 0.1212 gm-moles/l of free space	29.3 – 33.3psig OR 0.1218 gm-moles/l of free space
Maximum permissible multiplication factor (k_{eff}) including all uncertainties and biases	< 0 95	< 0 95
Boral ^{10}B Areal Density (g/cm^2)	0 0267 (MPC-24) 0.0372 (MPC-24E, MPC-24EF & MPC-32)	0.0372 (MPC-68 & MPC-68FF) 0.01 (MPC-68F)
End closure(s)	Welded	Welded
Fuel handling	Opening compatible with standard grapples	Opening compatible with standard grapples
Heat dissipation	Passive	Passive

† Maximum normal condition design temperatures for the MPC fuel basket. A complete listing of design temperatures for all components is provided in Table 2.2.3.

†† Temperature based on off-normal minimum environmental temperatures specified in Section 2.2.2.2 and no fuel decay heat load.

Table 1.2.3

INTENTIONALLY DELETED

Table 1.2.4

INTENTIONALLY DELETED

Table 1.2.5

INTENTIONALLY DELETED

Table 1.2.6

HI-STORM 100 OPERATIONS SEQUENCE

Site-specific handling and operations procedures will be prepared, reviewed, and approved by each owner/user.	
1	HI-TRAC and MPC lowered into the fuel pool without lids
2	Fuel assemblies transferred into the MPC fuel basket
3	MPC lid lowered onto the MPC
4	HI-TRAC/MPC assembly moved to the decon pit and MPC lid welded in place, volumetrically or multi-layer PT examined, hydrostatically tested, and leak tested
5	MPC dewatered, moisture removed, backfilled with helium, and the closure ring welded
6	HI-TRAC annulus drained and external surfaces decontaminated
7	MPC lifting cleats installed and MPC weight supported by rigging
8	HI-TRAC pool lid removed and transfer lid attached (not applicable to HI-TRAC 125D)
9	MPC lowered and seated on HI-TRAC transfer lid (not applicable to HI-TRAC 125D)
9a	HI-STORM mating device secured to top of empty HI-STORM overpack (HI-TRAC 125D only)
10	HI-TRAC/MPC assembly transferred to atop HI-STORM overpack or mating device, as applicable
11	MPC weight supported by rigging and transfer lid doors opened (standard design HI-TRAC) or pool lid removed (HI-TRAC 125D)
12	MPC lowered into HI-STORM overpack, and HI-TRAC removed from atop HI-STORM overpack/mating device
12a	HI-STORM mating device removed (HI-TRAC 125D only)
13	HI-STORM overpack lid installed and bolted in place
14	HI-STORM overpack placed in storage at the ISFSI pad
15	For HI-STORM 100A (or 100SA) users, the overpack is anchored to the ISFSI pad by installation of nuts onto studs and torquing to the minimum required torque.

Table 1.2.7

REPRESENTATIVE ASME BOLTING AND THREADED ROD MATERIALS ACCEPTABLE FOR THE HI-STORM 100A ANCHORAGE SYSTEM

ASME MATERIALS FOR BOLTING

Composition	I.D.	Type Grade or UNC No.	Ultimate Strength (ksi)	Yield Strength (ksi)	Code Permitted Size Range†
C	SA-354	BC K04100	125	109	t ≤ 2.5"
¾Cr	SA-574	51B37M	170	135	t ≥ 5/8"
1 Cr – 1/5 Mo	SA-574	4142	170	135	t ≥ 5/8"
1 Cr-1/2 Mo-V	SA-540	B21 (K 14073)	165	150	t ≤ 4"
5 Cr – ½Mo	SA-193	B7	125	105	t ≤ 2 5"
2N, – ¾Cr – ¼ Mo	SA-540	B23 (H-43400)	135	120	
2N, – ¾Cr – 1/3 Mo	SA-540	B-24 (K-24064)	135	120	
17Cr-4Ni-4Cu	SA-564	630(H-1100)	140	115	
17Cr-4Ni-4Cu	SA-564	630(H-1075)	145	125	
25Ni-15Cr-2Ti	SA-638	660	130	85	
22CR-13Ni-5Mn	SA-479	XM-19(S20910)	135	105	

Note: The materials listed in this table are representative of acceptable materials and have been abstracted from the ASME Code, Section II, Part D, Table 3. Other materials listed in the Code are also acceptable as long as they meet the size requirements, the minimum requirements on yield and ultimate strength (see Table 2 0.4), and are suitable for the environment.

† Nominal diameter of the bolt (or rod) as listed in the Code tables. Two-inch diameter studs/rods are specified for the HI-STORM 100A.

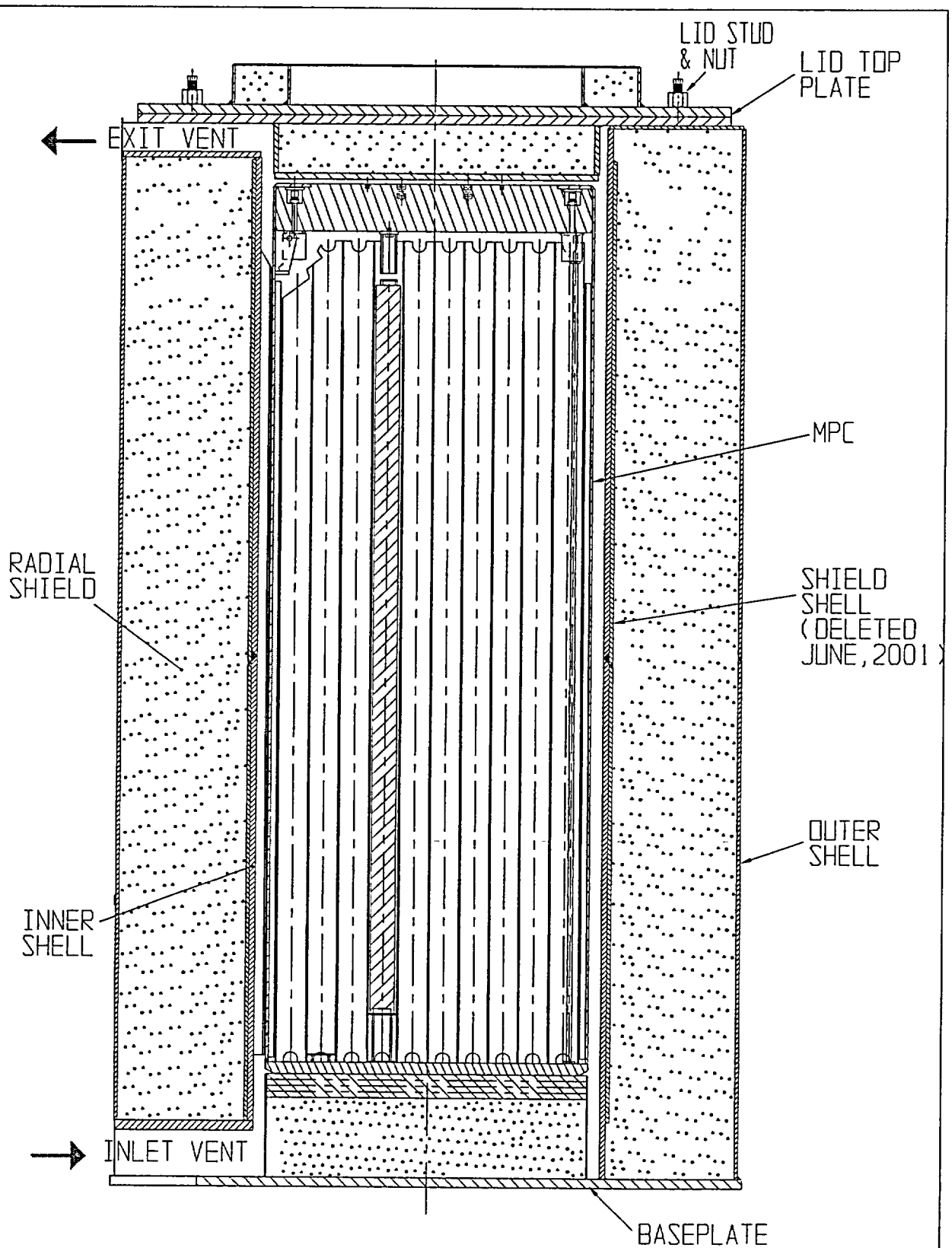

FIGURE 1.2.1; CROSS SECTION VIEW OF THE HI-STORM 100 SYSTEM

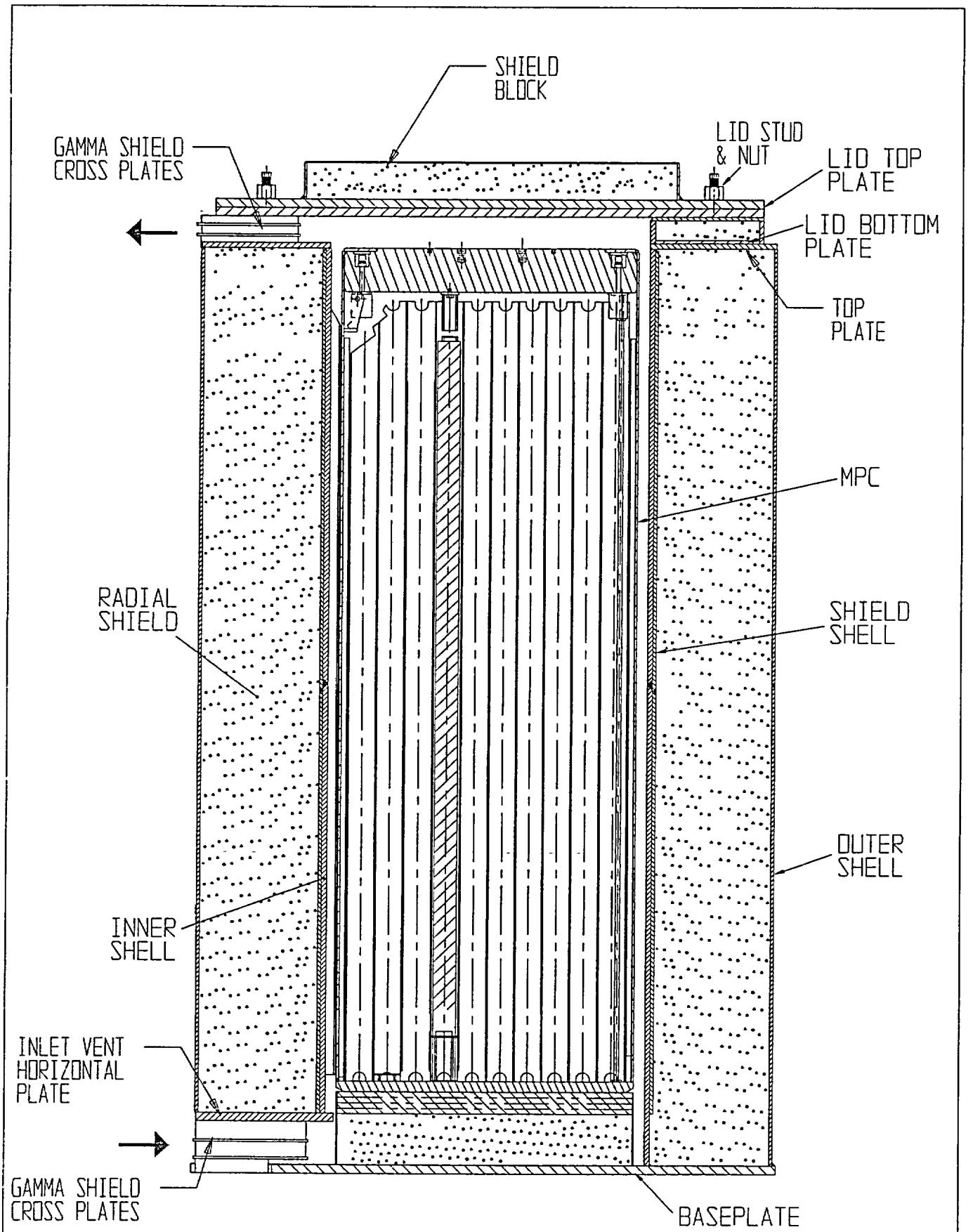

FIGURE 1.2.1A; CROSS SECTION VIEW OF THE HI-STORM 100S SYSTEM

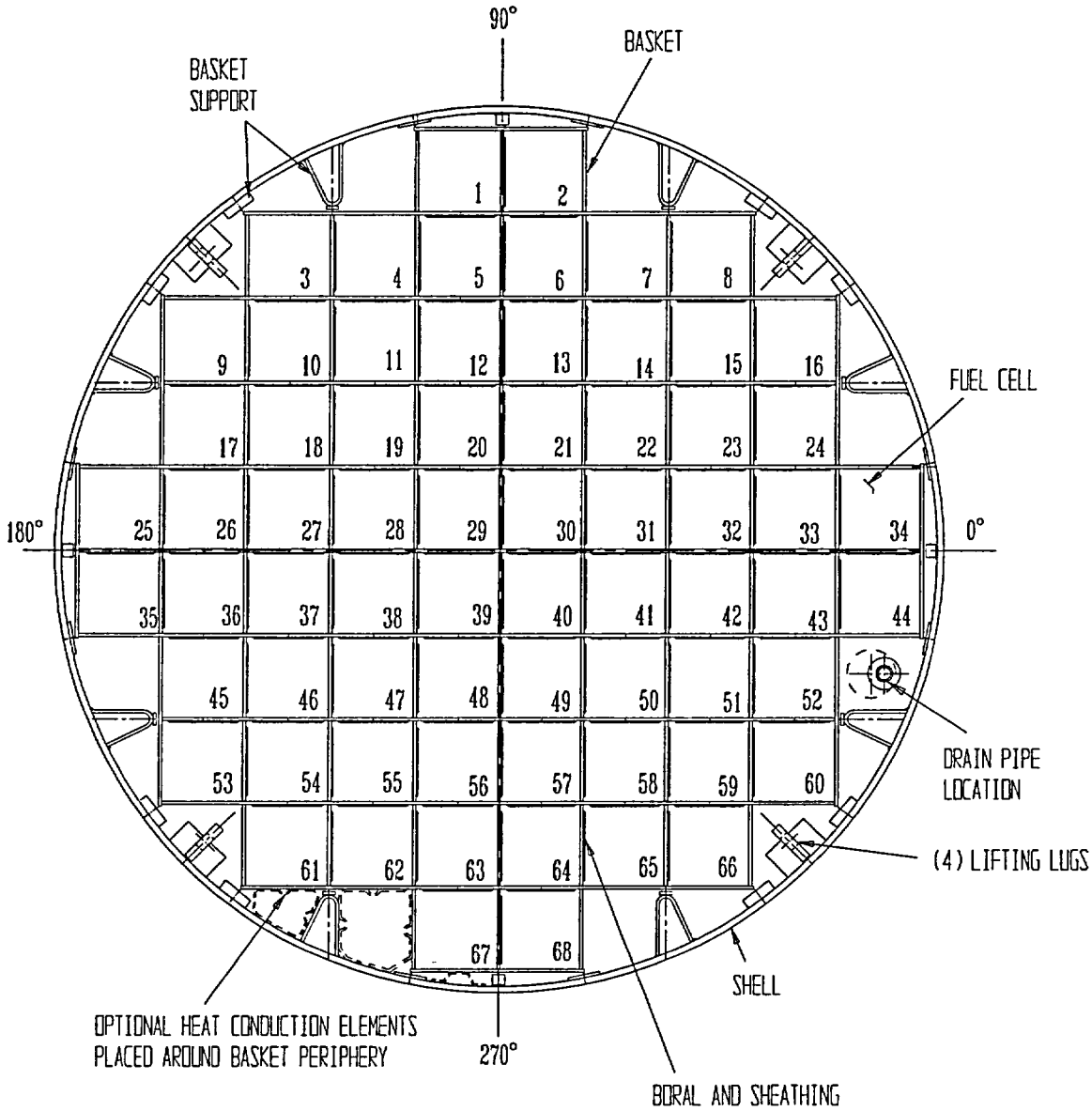

FIGURE 1.2.2; MPC-68 CROSS SECTION VIEW

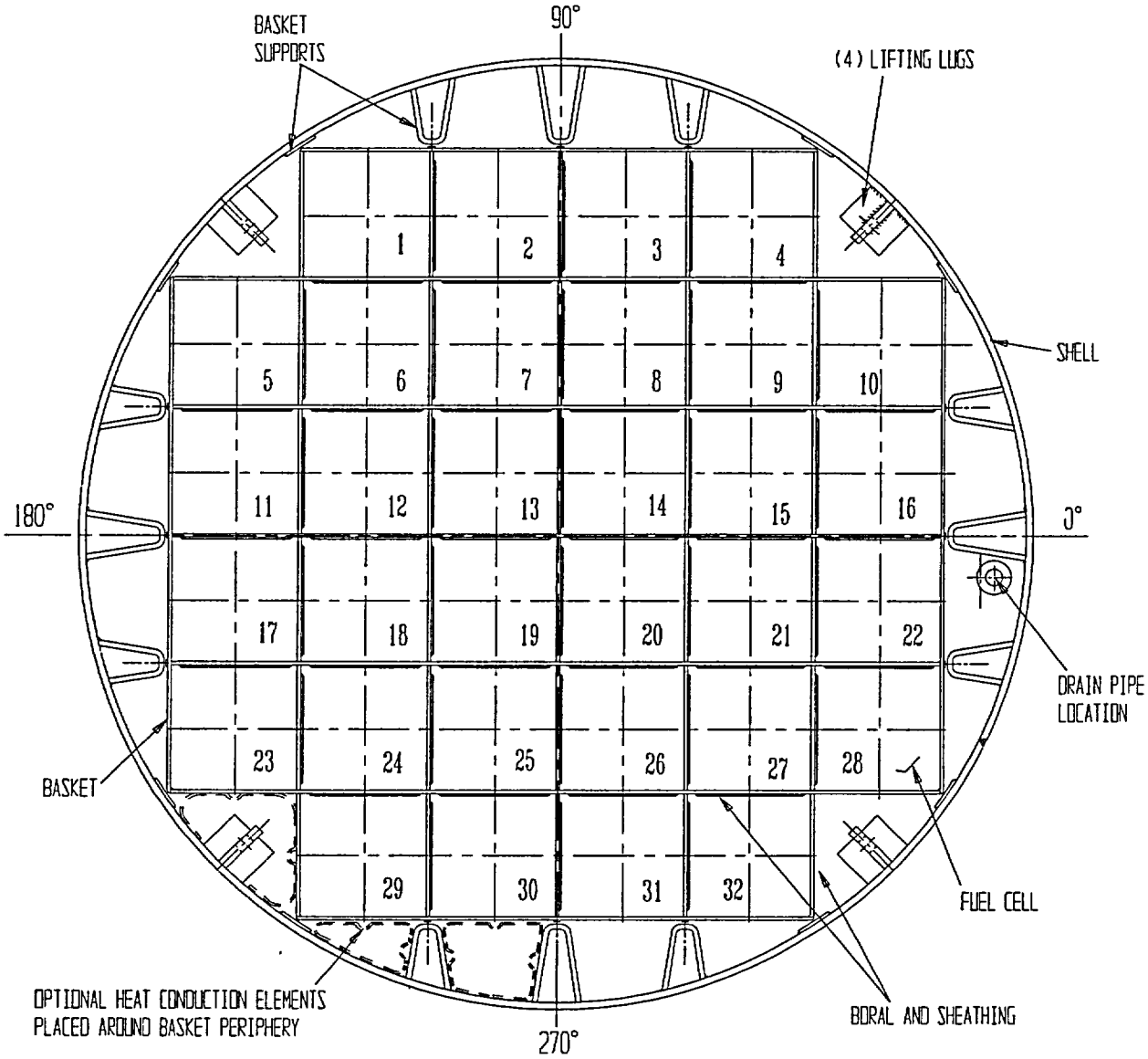

FIGURE 1.2.3; MPC-32 CROSS SECTION

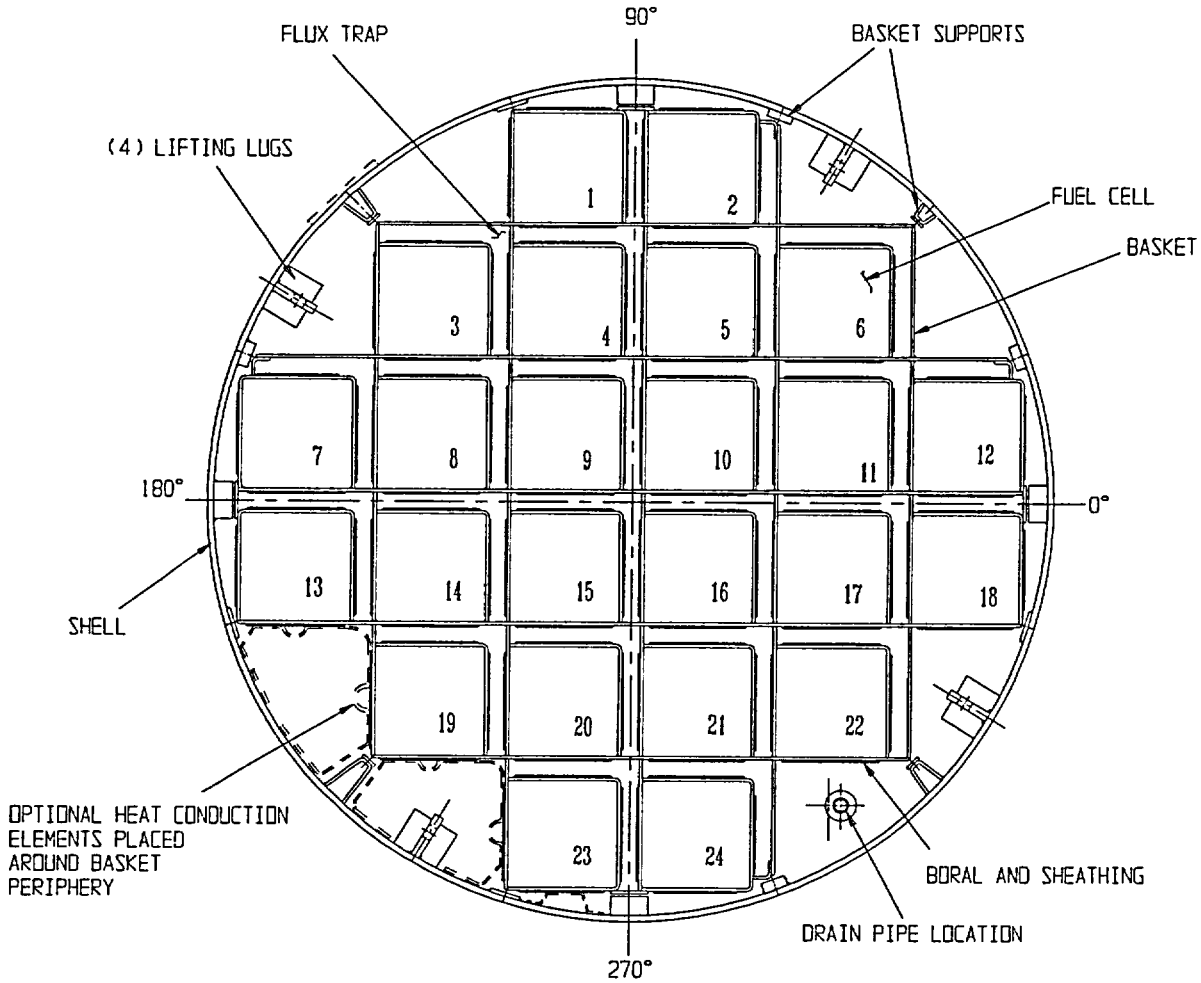

FIGURE 1.2.4; MPC-24/24E/24EF CROSS SECTION VIEW

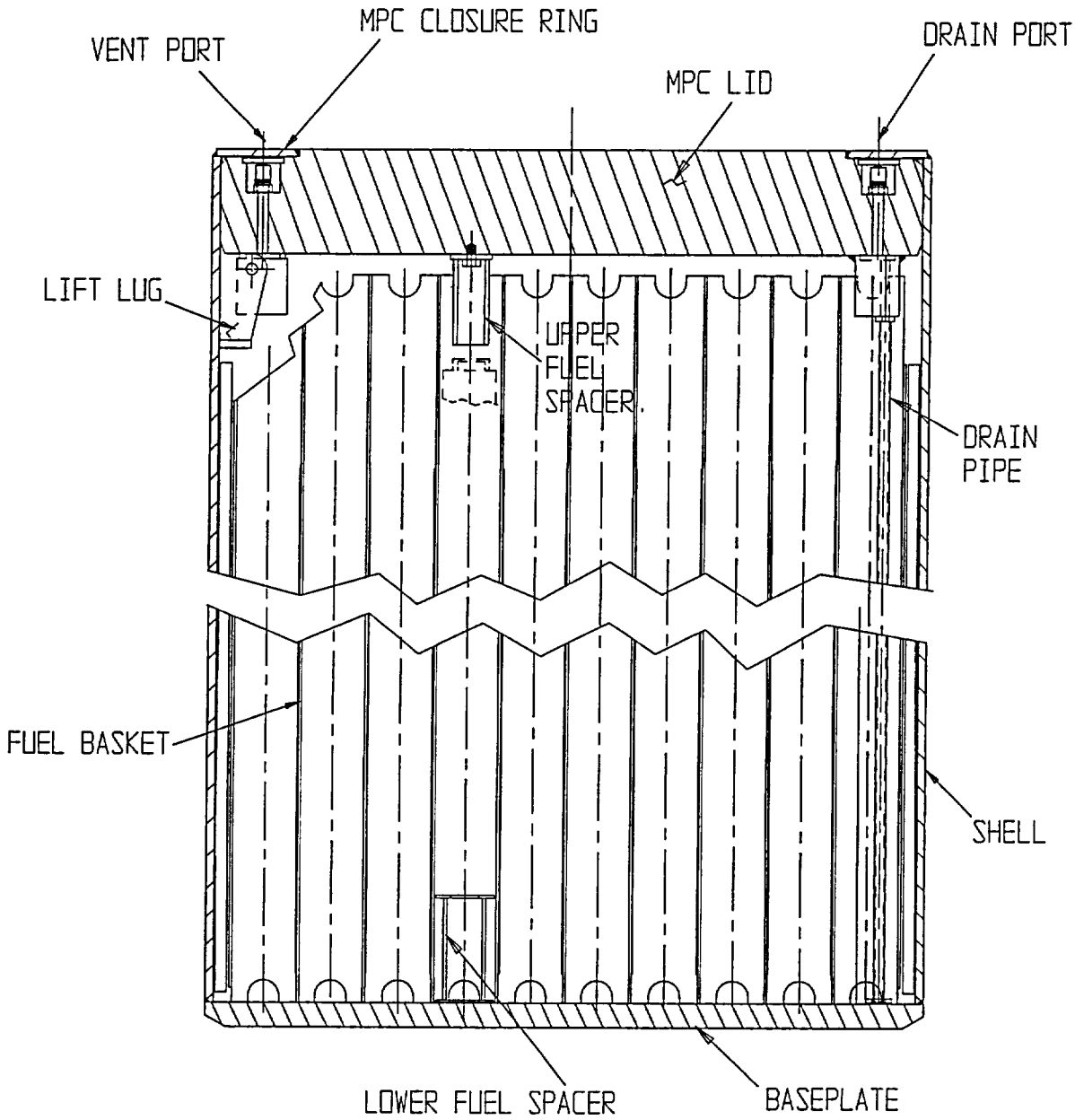

FIGURE 1.2.5; CROSS SECTION ELEVATION VIEW OF MPC

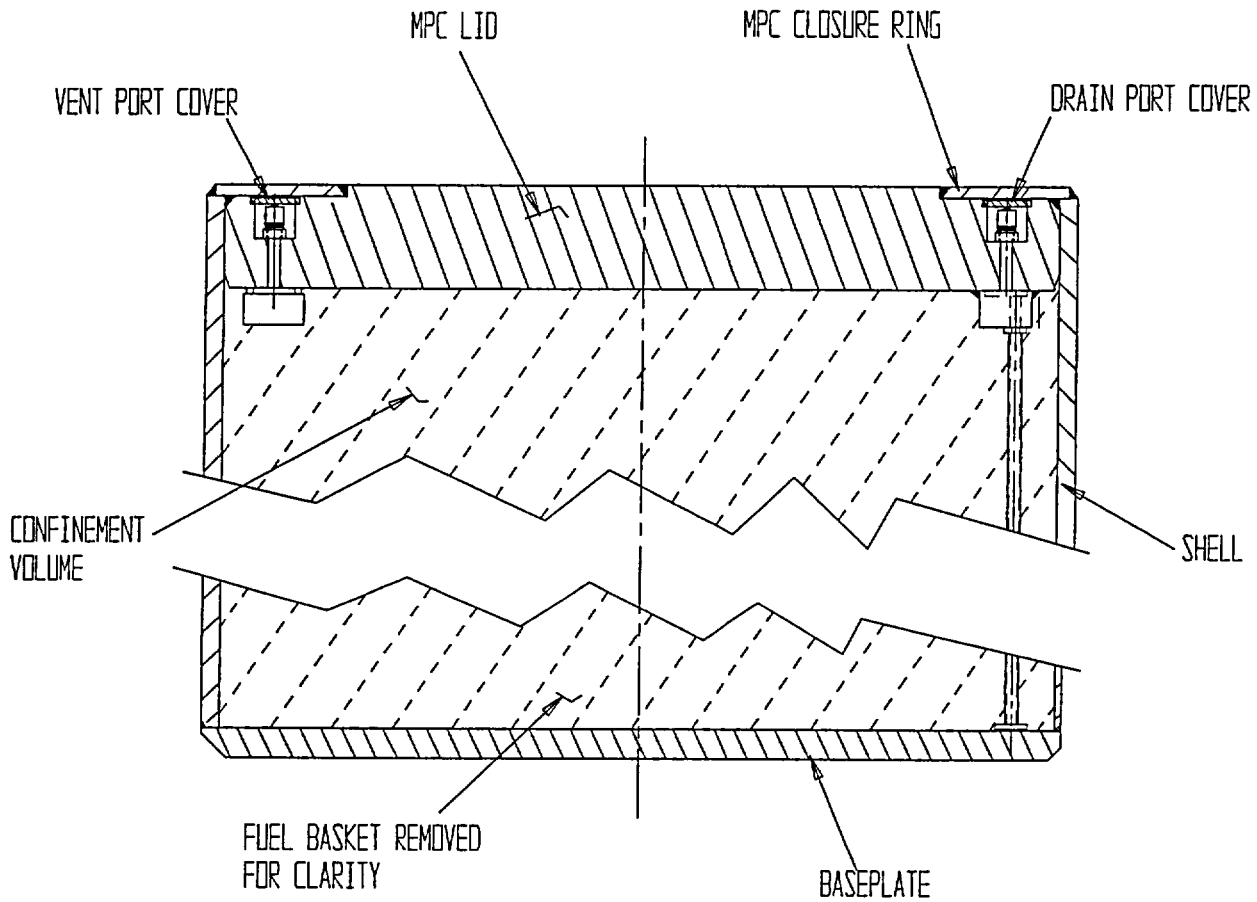

FIGURE 1.2.6; MPC CONFINEMENT BOUNDARY

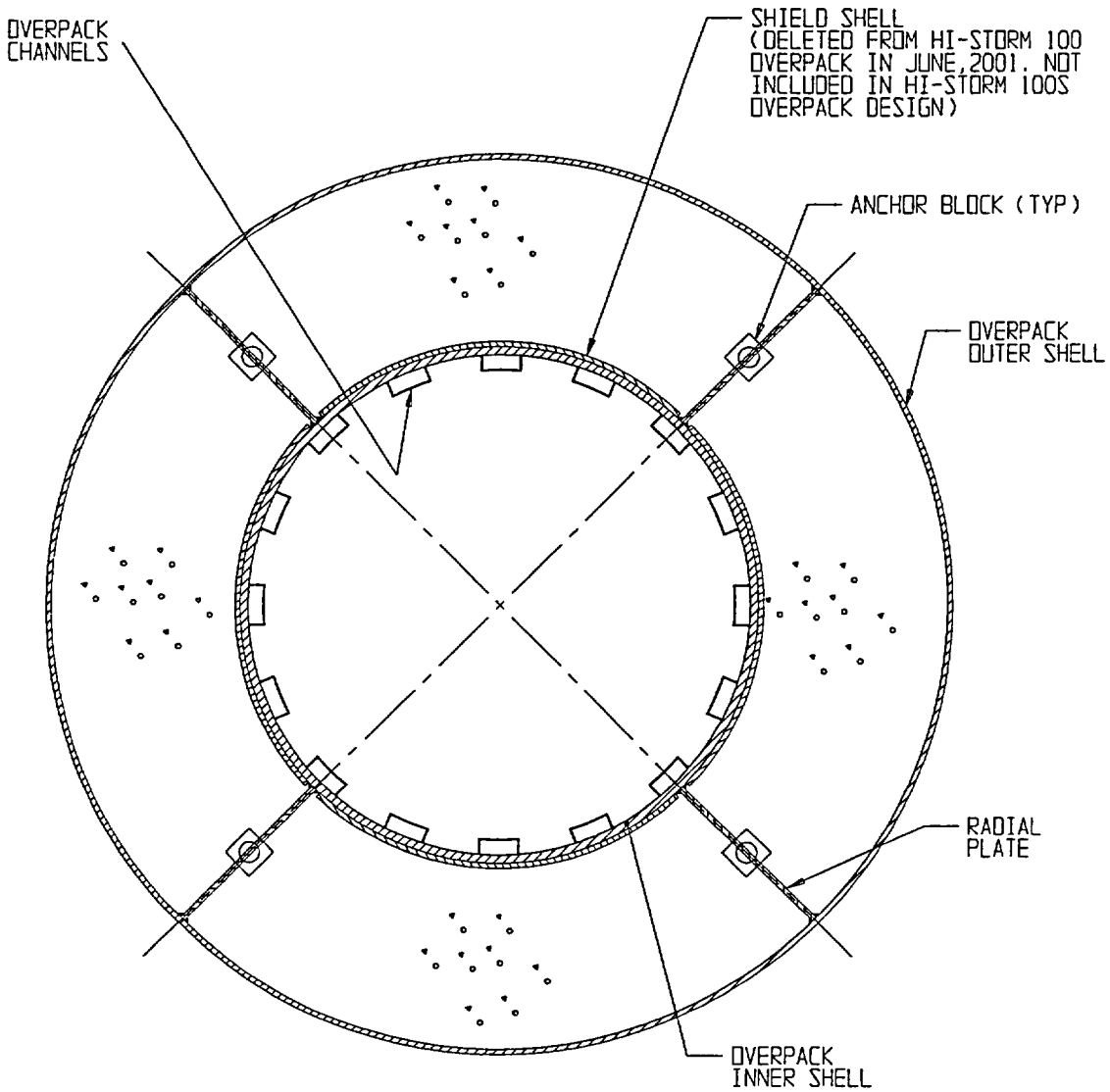

FIGURE 1.2.7; CROSS SECTION OF HI-STORM OVERPACK

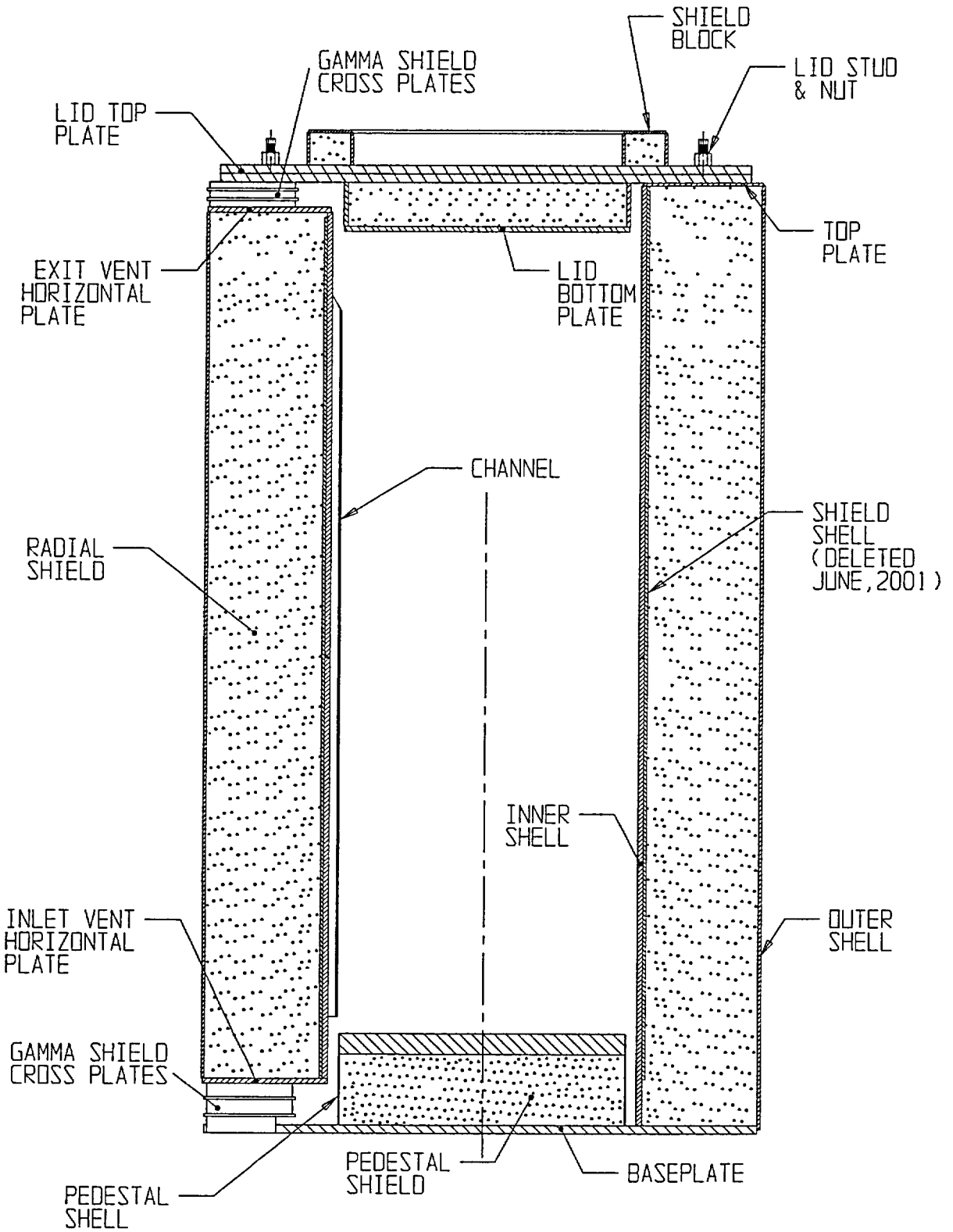

FIGURE 1.2.8; HI-STORM 100 OVERPACK CROSS SECTIONAL ELEVATION VIEW

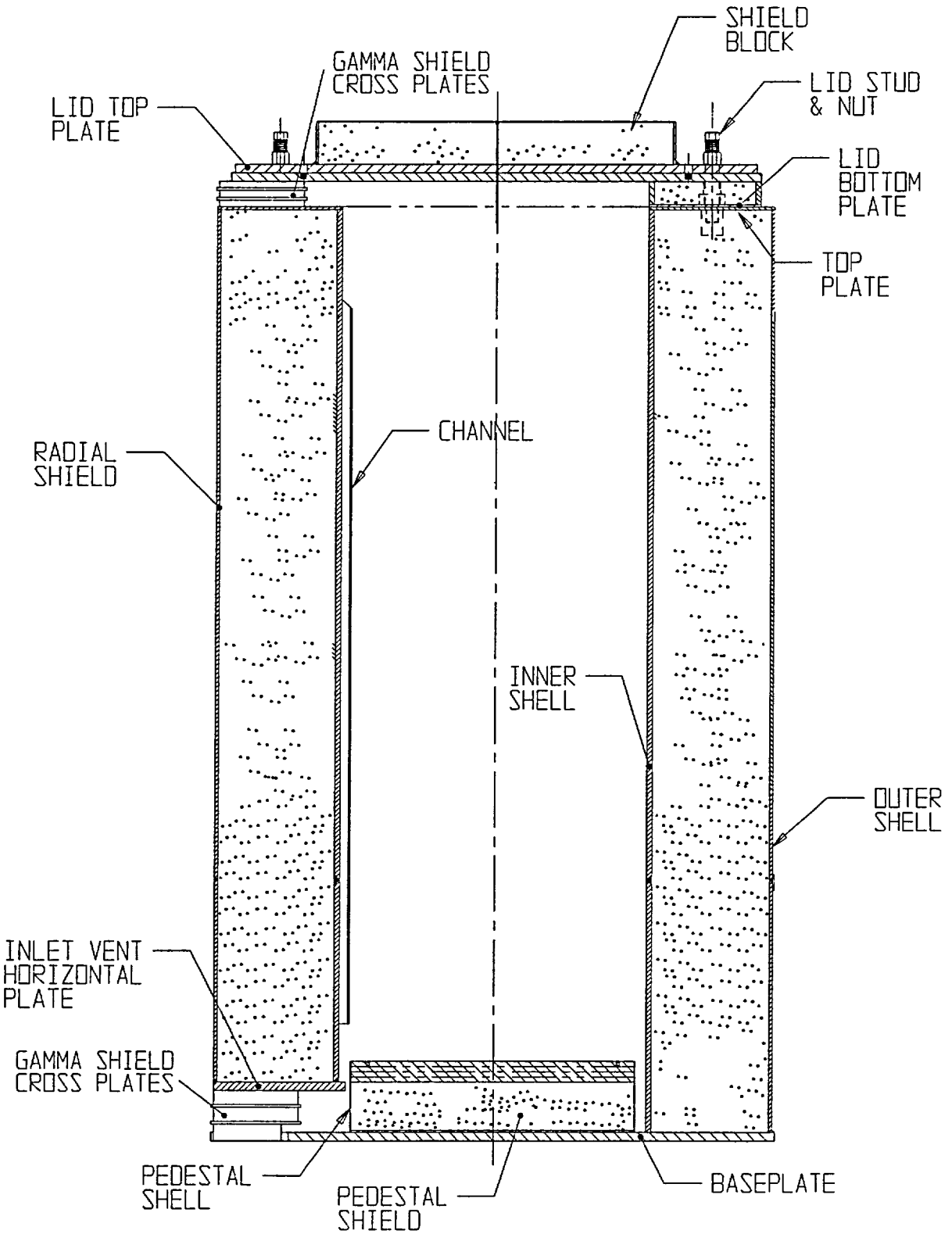

FIGURE 1.2.8A; HI-STORM 100S OVERPACK CROSS SECTIONAL ELEVATION VIEW

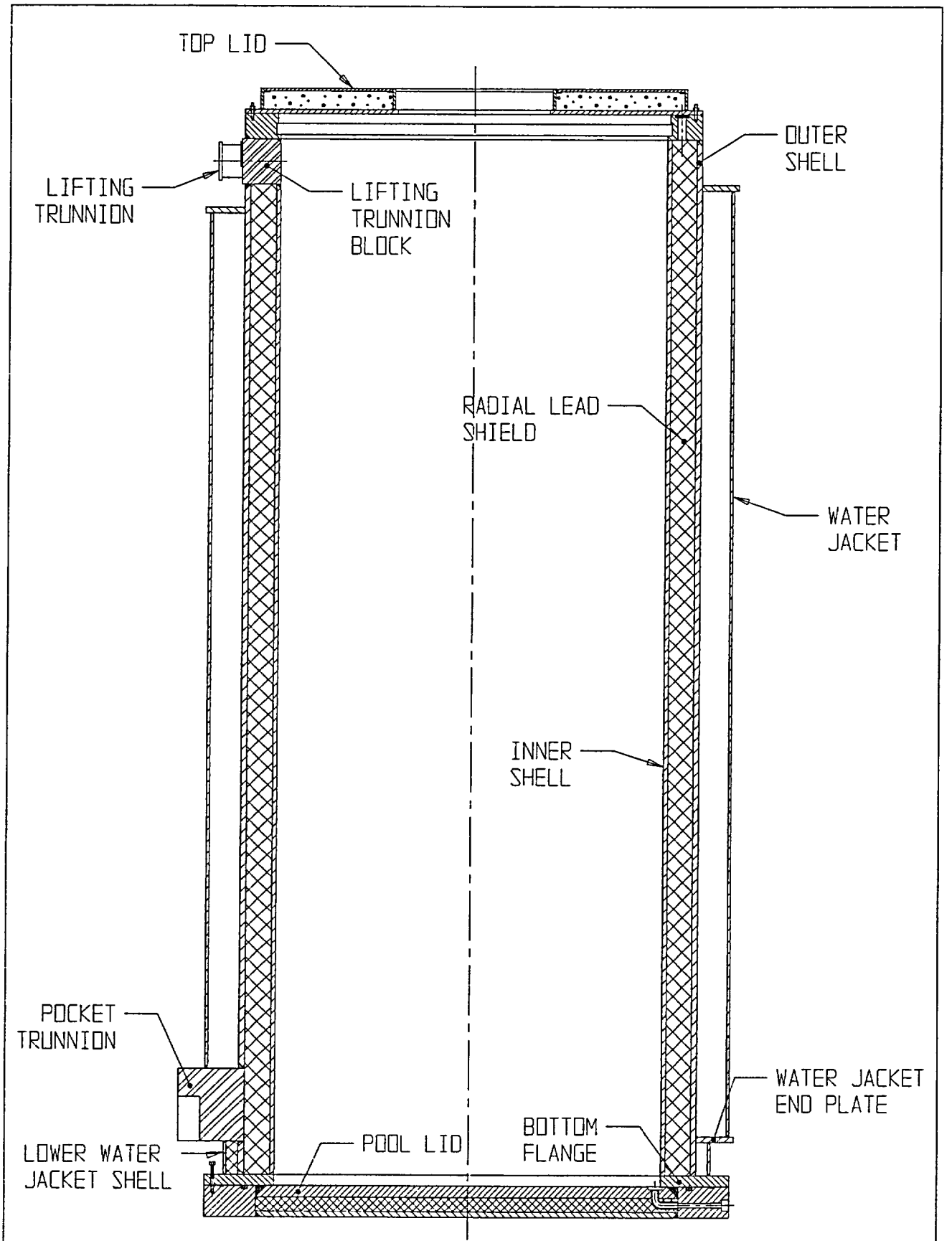

FIGURE 1.2.9; 125TON HI-TRAC TRANSFER CASK WITH POOL LID CROSS SECTIONAL ELEVATION VIEW

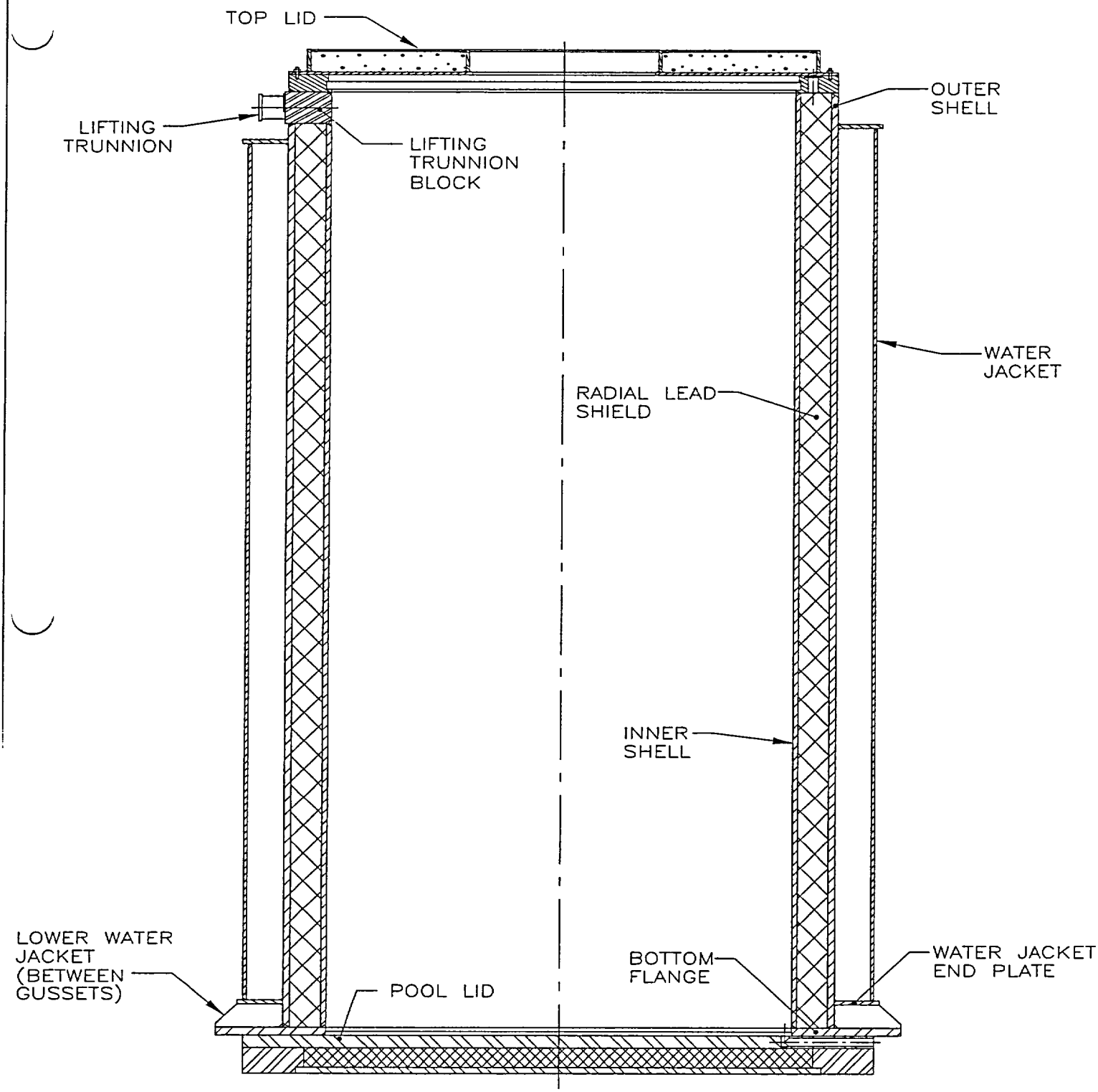

FIGURE 1.2.9A; HI-TRAC 125D TRANSFER CASK CROSS SECTIONAL ELEVATION VIEW

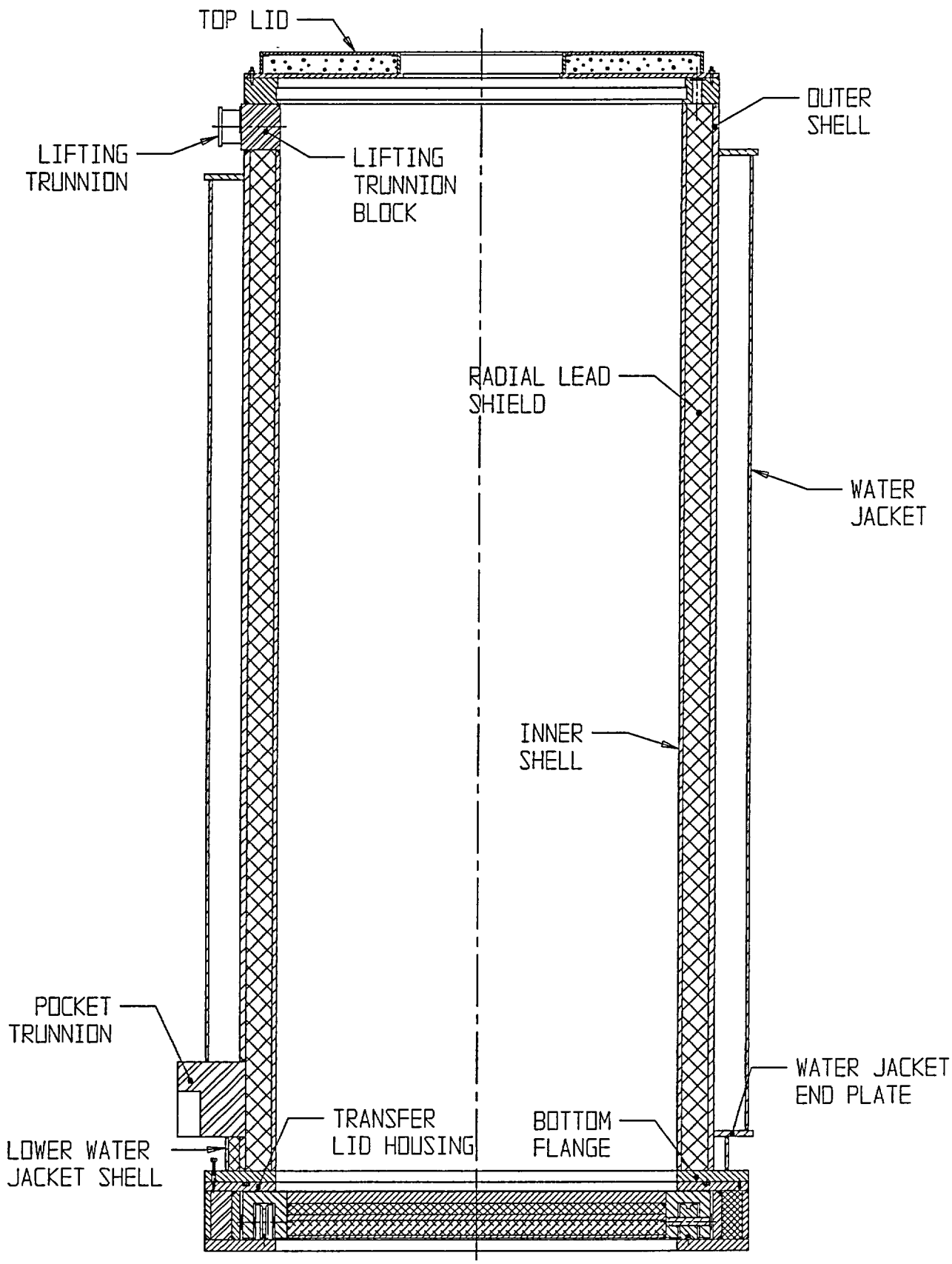

FIGURE 1.2.10; 125TON HI-TRAC TRANSFER CASK WITH TRANSFER LID CROSS SECTIONAL ELEVATION VIEW

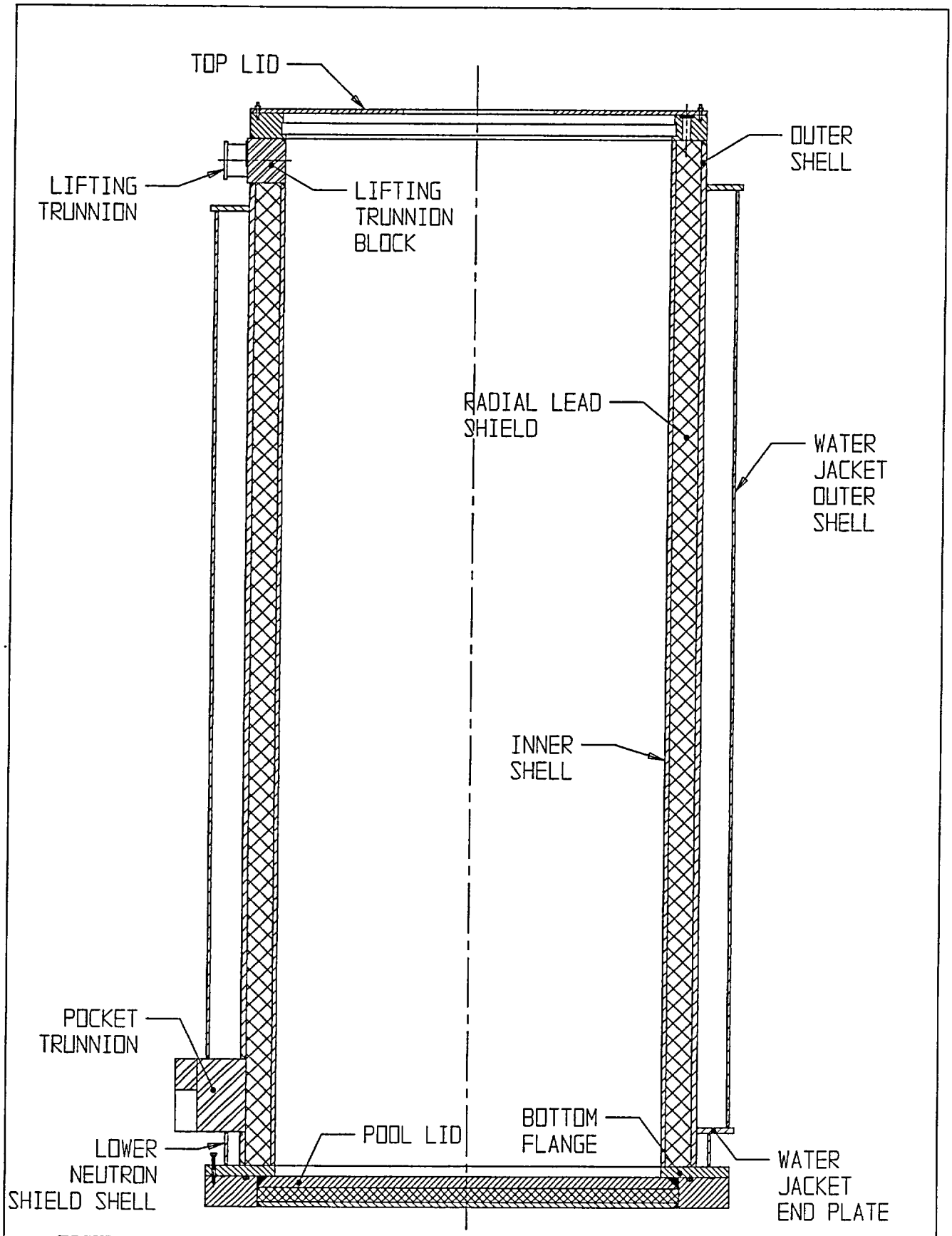

FIGURE 1.2.11; 100 HI-TRAC TRANSFER CASK WITH POOL LID CROSS SECTIONAL ELEVATION VIEW

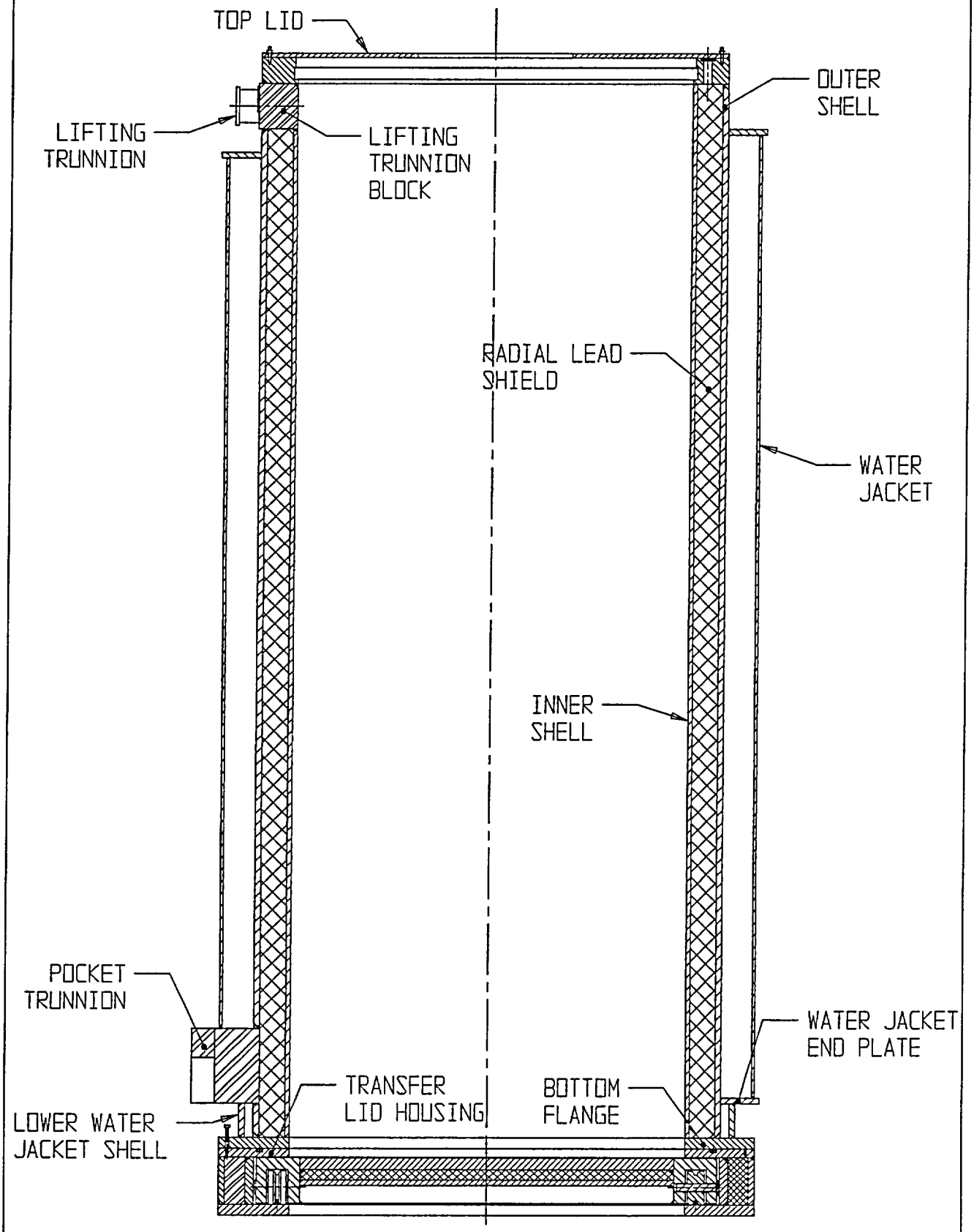

FIGURE 1.2.12; 100 TON HI-TRAC TRANSFER CASK WITH TRANSFER LID CROSS SECTIONAL ELEVATION VIEW

DELETED

FIGURE 1.2.13; DELETED

DELETED

FIGURE 1.2.14; DELETED

DELETED

FIGURE 1.2.15; DELETED

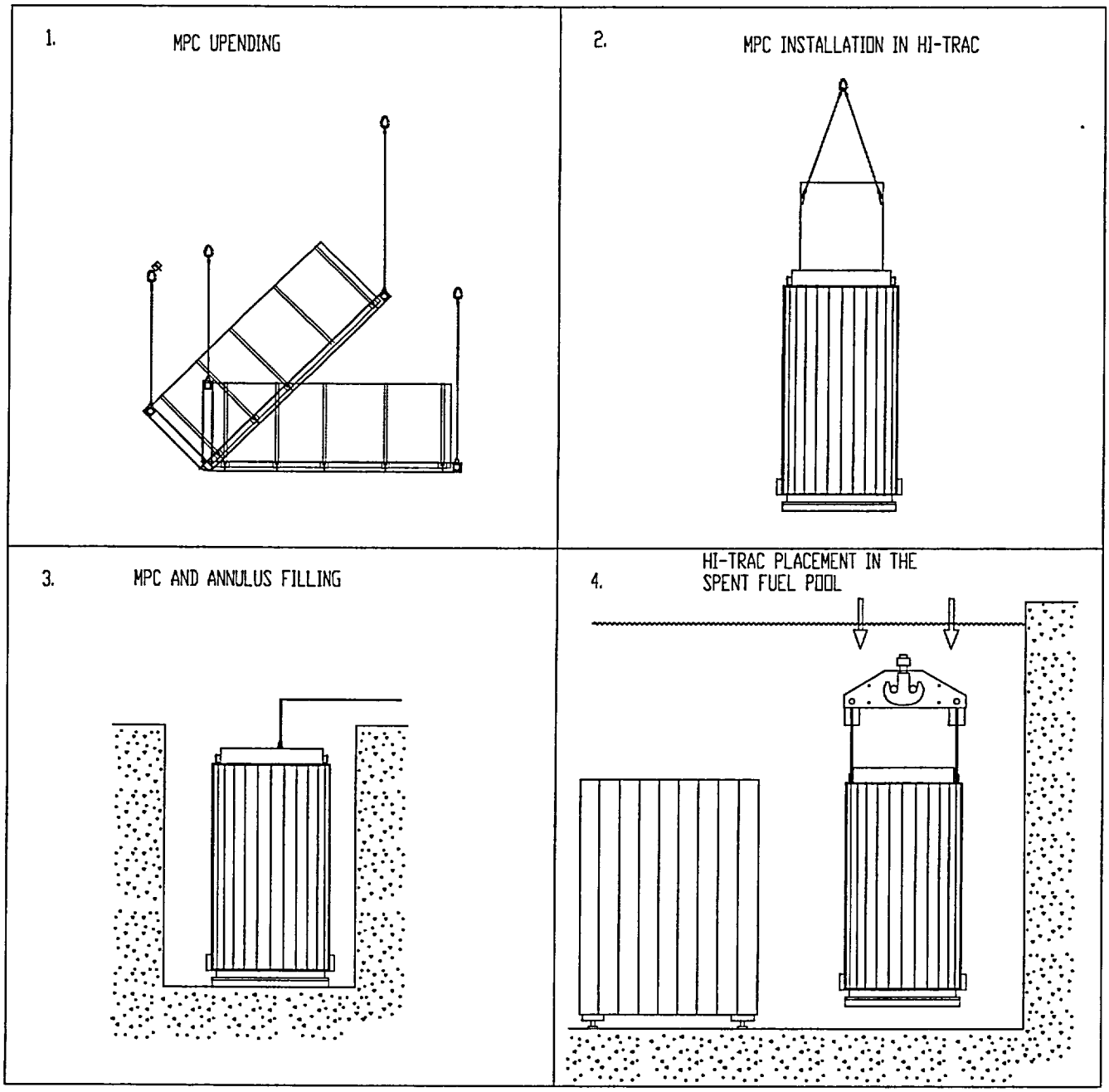

Figure 1.2.16a; Major HI-STORM 100 Loading Operations (Sheet 1 of 6)

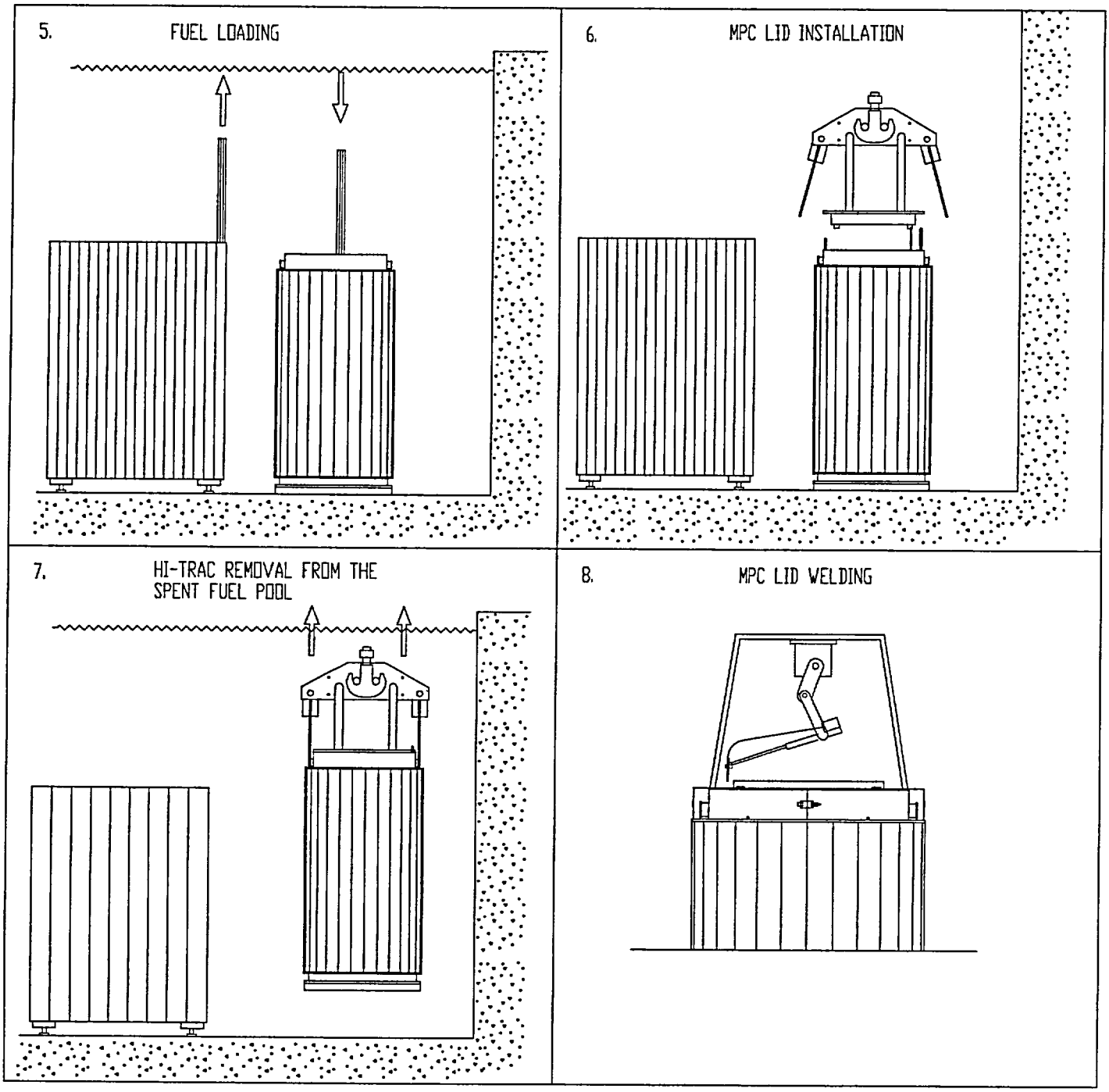

Figure 1.2.16b; Major HI-STORM 100 Loading Operations (Sheet 2 of 6)

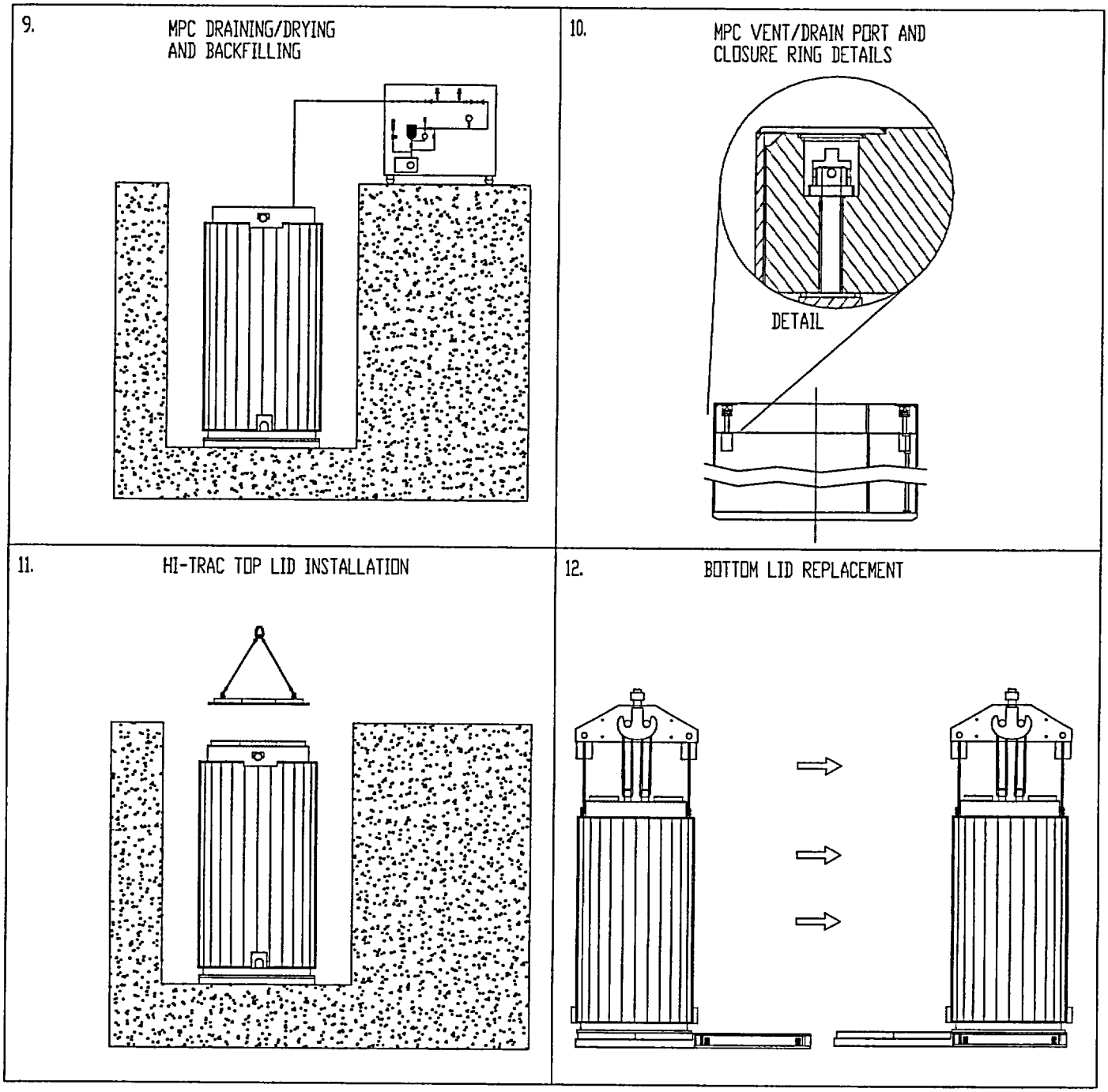

Figure 1.2.16c; Major HI-STORM 100 Loading Operations (Sheet 3 of 6)

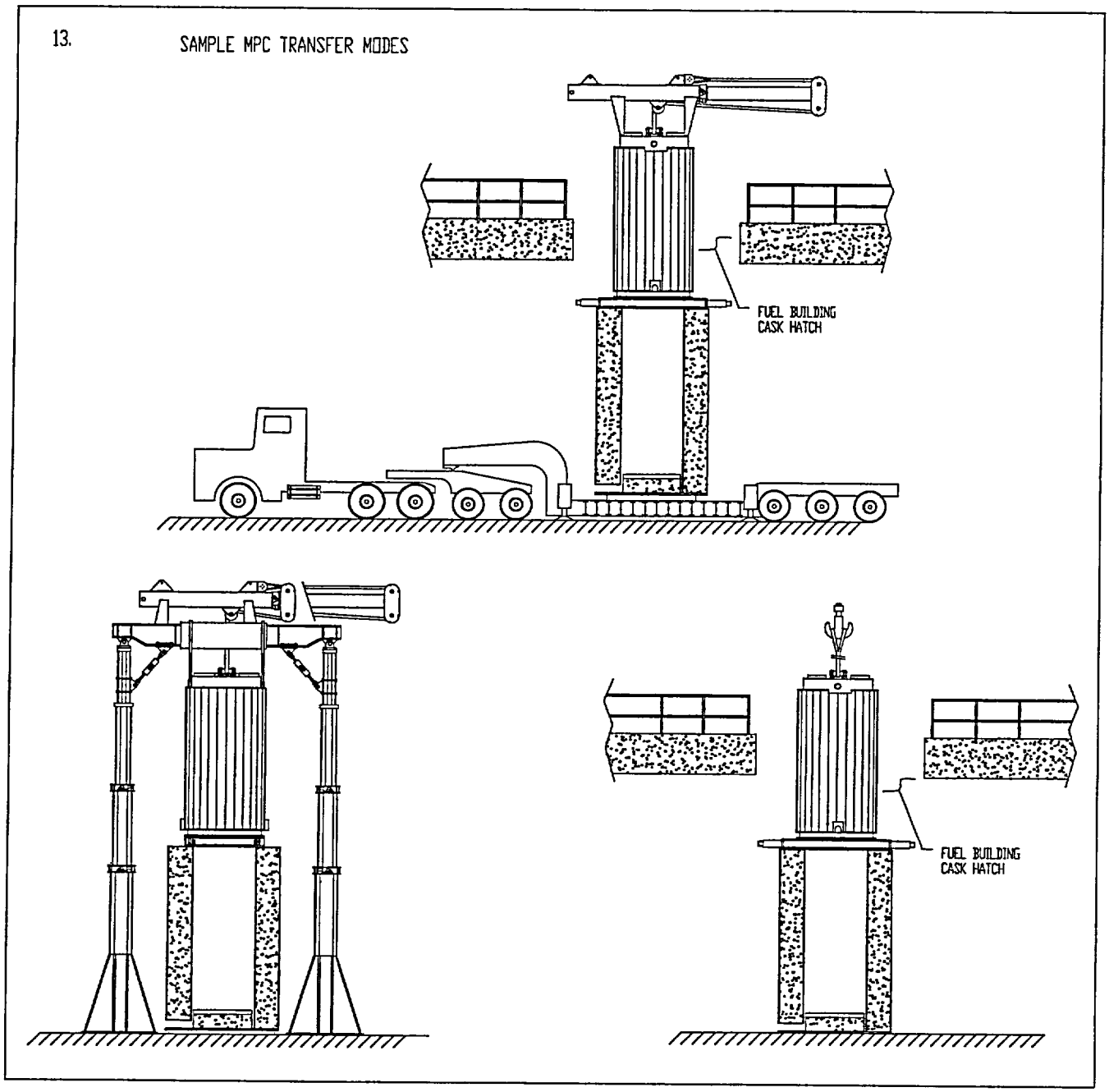

Figure 1.2.16d; Major HI-STORM 100 Loading Operations (Sheet 4 of 6)

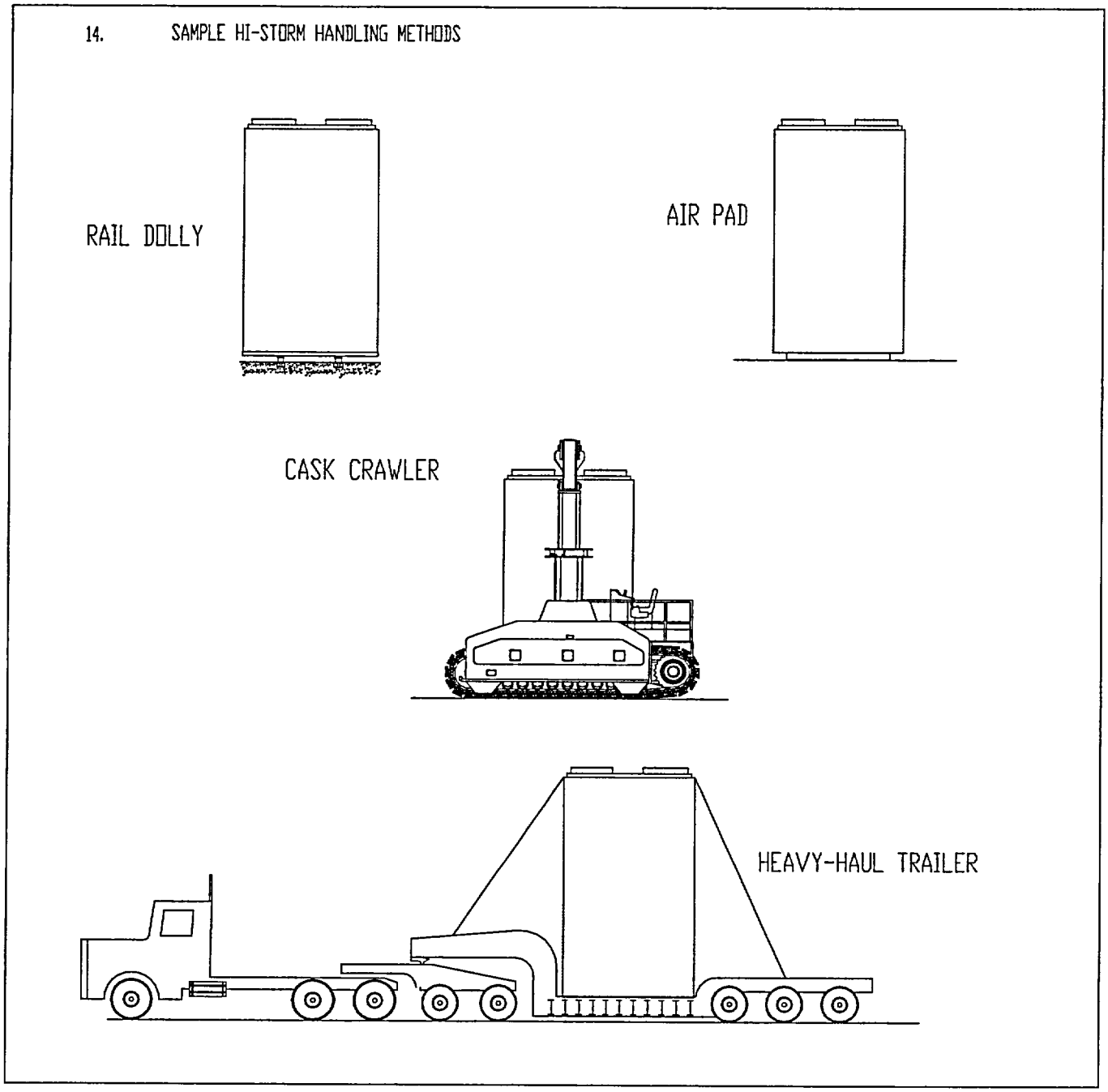

Figure 1.2.16e; Example of HI-STORM 100 Handling Options (Sheet 5 of 6)

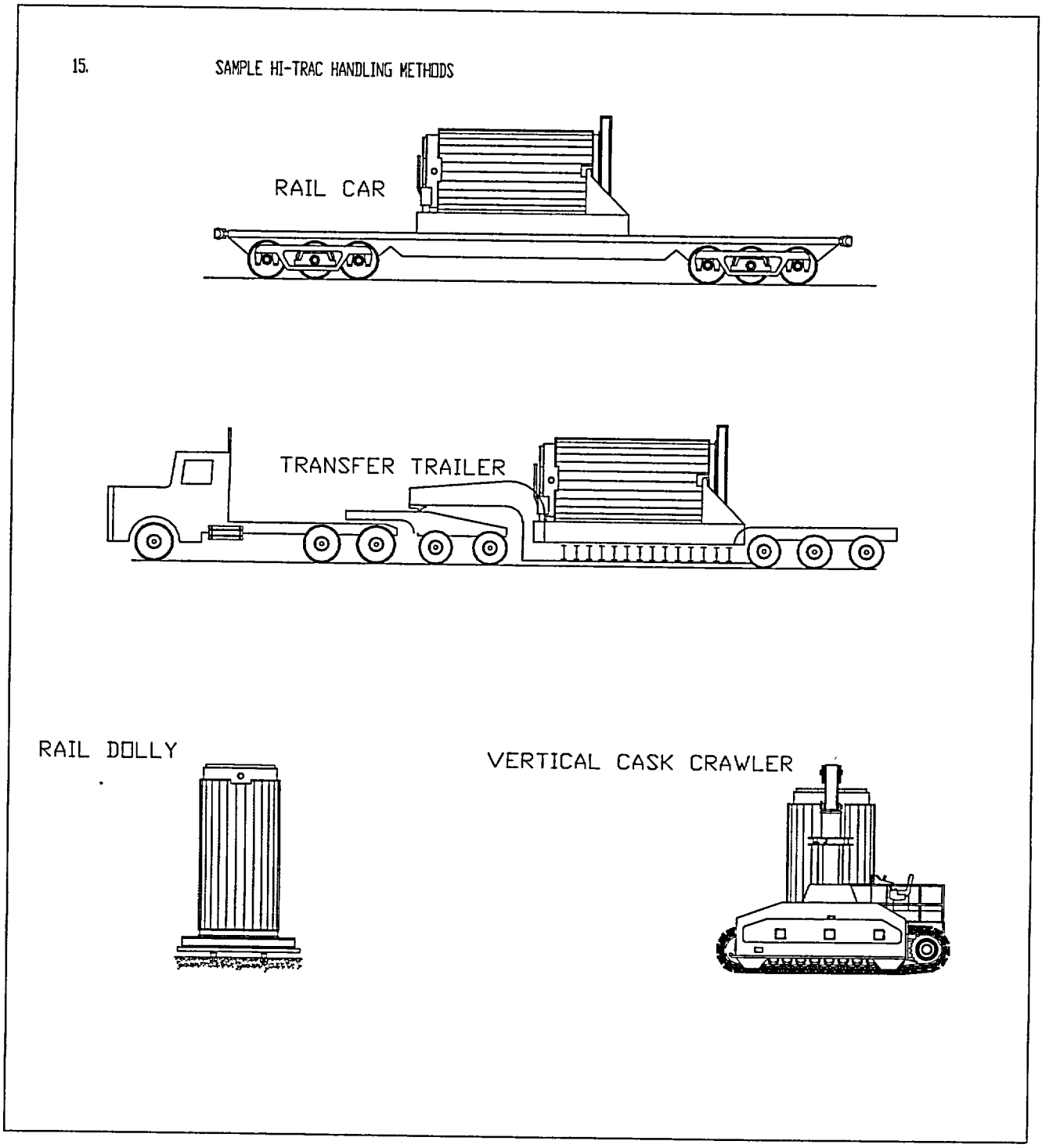

Figure 1.2.16f; Example of HI-TRAC Handling Options (Sheet 6 of 6)

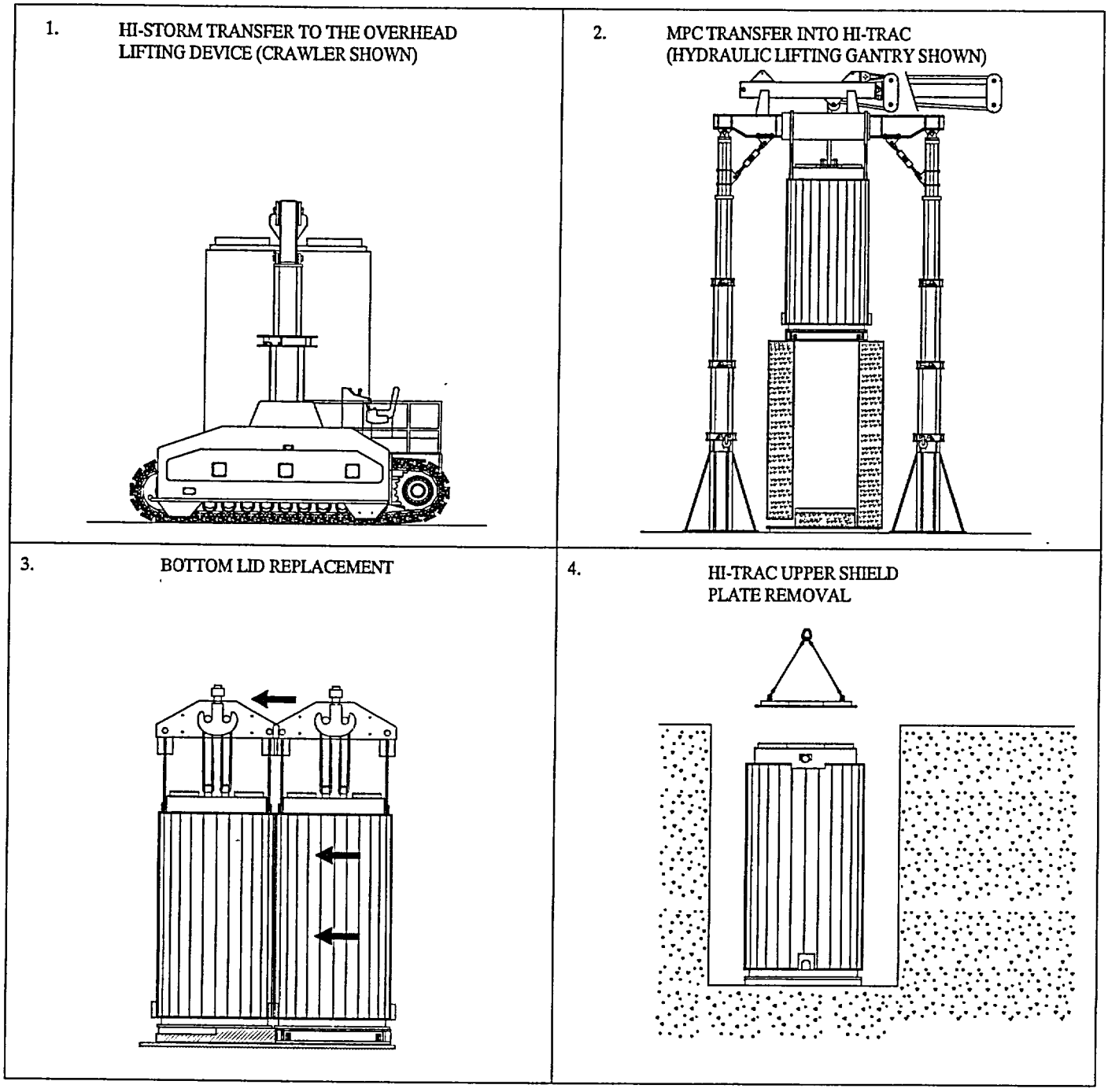

Figure 1.2.17a; Major HI-STORM 100 Unloading Operations (Sheet 1 of 4)

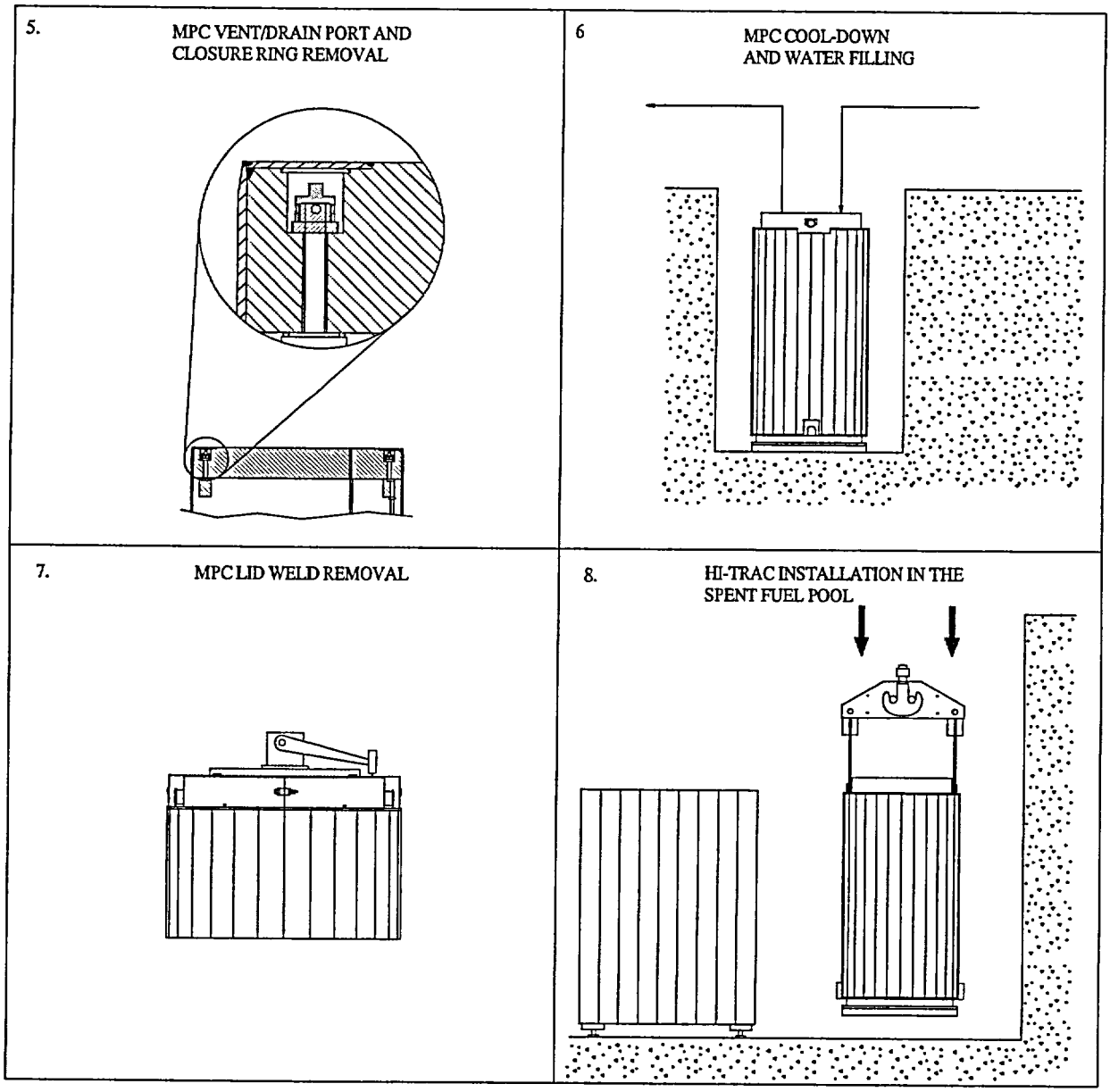

Figure 1.2.17b; Major HI-STORM 100 Unloading Operations (Sheet 2 of 4)

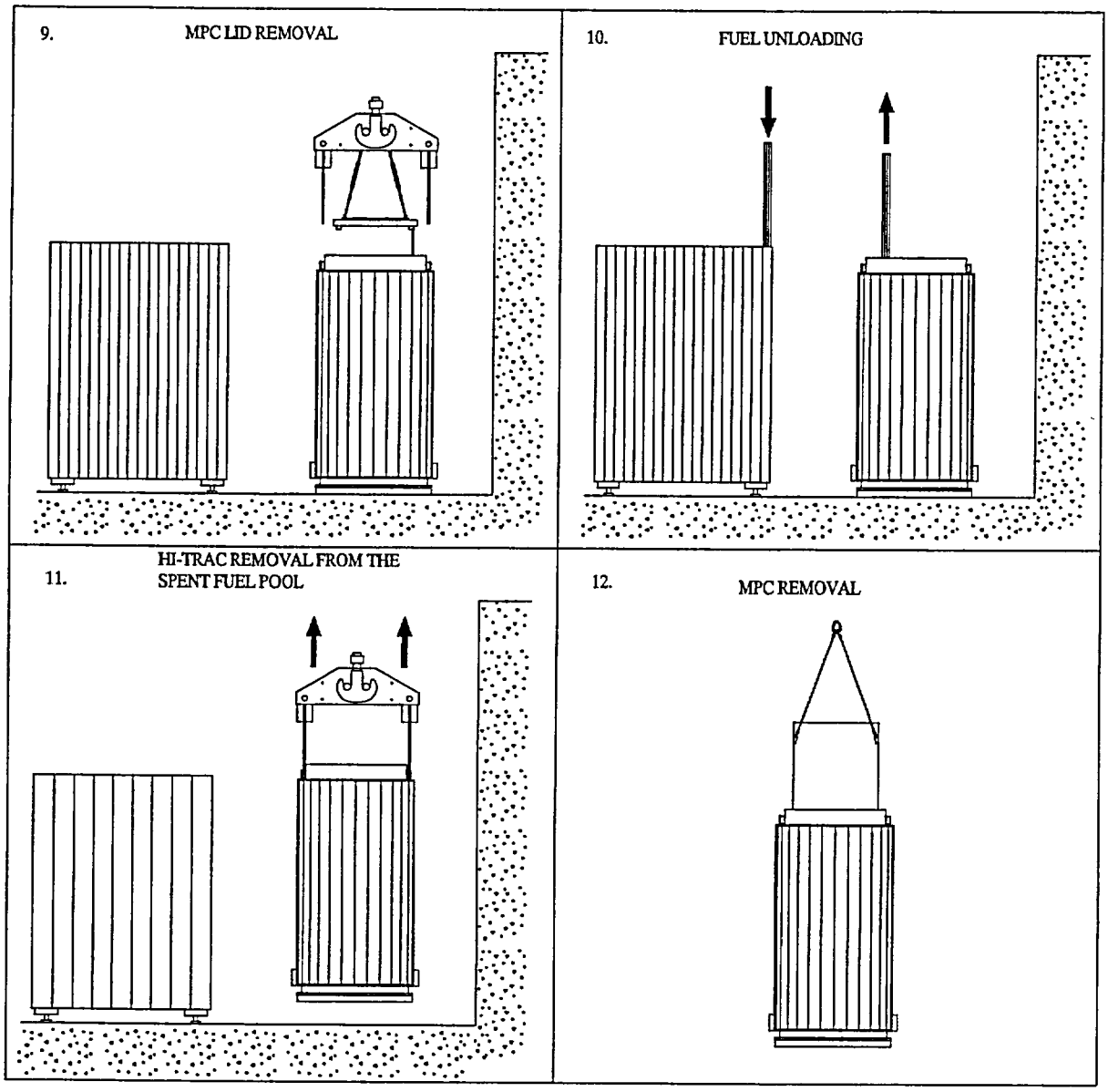

Figure 1.2.17c; Major HI-STORM 100 Unloading Operations (Sheet 3 of 4)

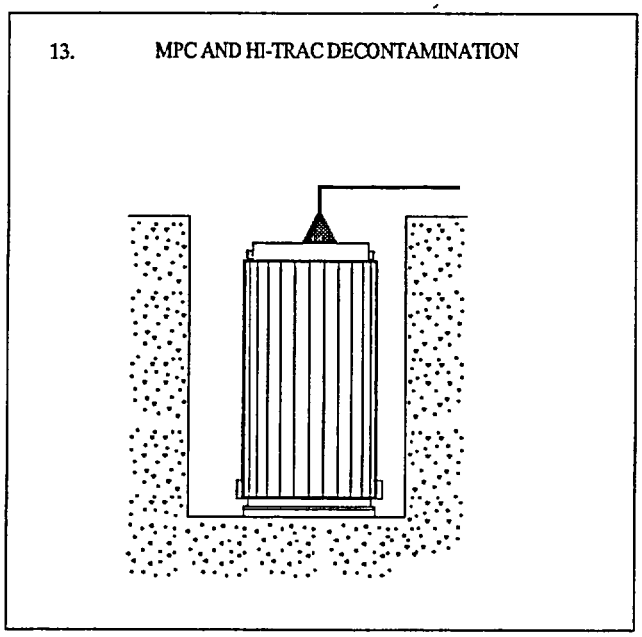

Figure 1.2.17d; Major HI-STORM 100 Unloading Operations (Sheet 4 of 4)

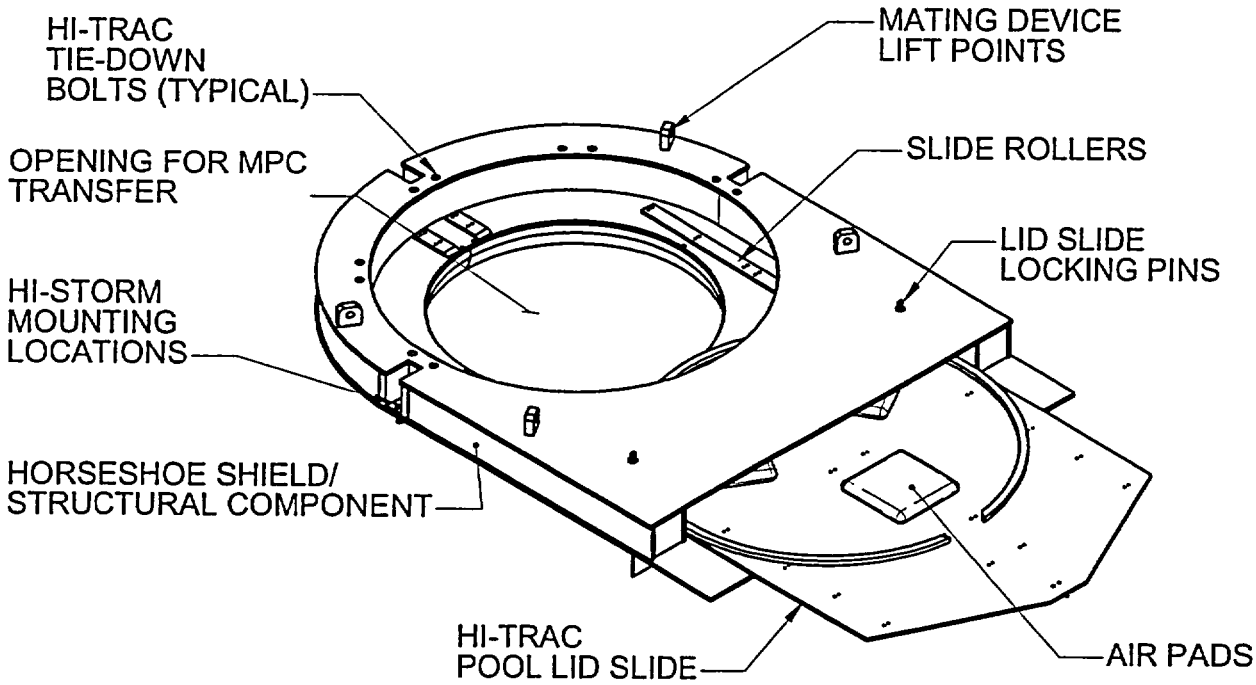

FIGURE 1.2.18; HI-STORM MATING DEVICE