ATTACHMENT C

ISI Program Classification Boundary Drawings

FILE ID 01220001 CIT
DATE 4 28 93 INT MOF
LVL

INDEX OF INSTRUMENT ABBREVIATION

MEASURED VARIABLE \ INSTRUMENT FUNCTION		CONTROLLING: RECORDING	CONTROLLING: INDICATING	CONTROLLING: BLIND	CONTROL VALV	MEASURING: RECORDING	MEASURING: INDICATING	MEASURING: OBSERVATION GLASS	MEASURING: PRIMARY ELEMENT	MEASURING: TEST POINT	MEASURING: TRANSMITTER	MEASURING: INTEGRATOR	MEASURING: AMPLIFIER	MEASURING: SAMPLER	SWITCH: INDICATING	SWITCH: BLIND	ALARMS: ALARM	ALARMS: ALARM LOW	ALARMS: ALARM HIGH	POWER SUPPLY
		RC	IC	C	CV	R	I	G	E	X	T	Q	Am	Sm	IS	S	A	AL	AH	
AIR	A													ASm						
CONDUCTIVITY	C	CRC	CIC		CCV	CR	CI		CE	CX				CSm	CIS	CS	CA	CAL	CAH	
DENSITY	D	DRC	DIC	DC	DCV	DR	DI			DX					DIS	DS	DA	DAL	DAH	
DIFF. PRESS	JP	dPRC	dPIC	dPC	dPCV	dPR	dPI				dPT				dPIS	dPS	dPA	dPAL	dPAH	
FLOW	F	FRC	FIC	FC	FCV	FR	FI	FG	FE	FX	FT				FIS	FS	FA	FAL	FAH	
HUMIDITY	H	HRC	HIC			HR	HI		HE											
pH	pH	pHRC	pHIC	pHC	pHCV	pHR	pHI		pHE	pHX	pHT		pHAm	pHSm						
LEVEL	L	LRC	LIC	LC	LCV	LR	LI	LG			LT				LIS	LS	LA	LAL	LAH	
OXYGEN	Ox					OxR	OxI		OxE											
PRESSURE	P	PRC	PIC	PC	PCV	PR	PI		PE	PX	PT				PIS	PS	PA	PAL	PAH	
POSITION	Po					PoR	PoI				PoT					PoS	PoA			
RADIATION	R					RR	RI		RE	RX			RAm	RSm		RS	RA			RPw
SPECIFIC GRAV	Sg																			
SPEED	Sp	SpRC	SpIC	SpC		SpR	SpI		SpE											
TEMPERATURE	T	TRC	TIC	TC	TCV	TR	TI		TE	TX	TT				TIS	TS	TA	TA	TA	
TURBIDITY	Tu																			
VISCOSITY	V																			
VIBRATION	Vb															VbS	VbA			
WEIGHT	W																			
WEIGHT FACTOR	Wf	WfRC	WfIC		WfCV															
WATER	Wa																			

SUFFIX SUB H OR L MAY BE ADDED TO DESIGNATE HIGH OR LOW

NOTE BLANK SPACES REPRESENT IMPROBABLE COMBINATIONS

TYPICAL INSTRUMENT SYMBOLS

ALL INSTRUMENT CIRCLES ON P&ID TO BE 5/8

- TE TE — DUAL ELEMENT THERMOCOUPLE
- TE — THERMOCOUPLE
- TE — RESISTANCE TEMPERATURE DETECTOR
- TX — THERMOWELL
- FE — FORWARD REVERSE PITOT TUBE
- TI — TEMPERATURE INDICATOR WITH CAPILLARY
- FE — FLOW NOZZLE
- FE — FLOW ORIFICE
- RO — RESTRICTING ORIFICE
- FG — SIGHT FLOW INDICATING GLASS
- FI — IN LINE FLOW INDICATOR
- FT — ROTAMETER
- C — COMPUTER INPUT POINT
- X — TEST POINT
- TYPE / LOCAL MOUNTED INSTRUMENT / INSTRUMENT NO
- T — LOCAL MOUNTED TRANSMITTER
- IT — LOCAL MOUNTED INDICATING TRANSMITTER
- P—PANEL NO / LOCAL PANEL MOUNTED INSTRUMENT / P—PANEL NO
- CONTROL ROOM PANEL MOUNTED INSTRUMENT
- C — LOCAL PANEL MOUNTED CONTROLLER WITH MANUAL AUTOMATIC CONTROL STATION & SET POINT SELECTOR (UNLESS OTHERWISE NOTED)
- E P — ELECTRIC TO PNEUMATIC CONVERTER
- A P — VISIBLE & AUDIBLE ALARM (ANNUNCIATOR) / PANEL NO
- TURBINE METER
- FE — TURBINE METER
- SQUARE ROOT EXTRACTOR
- SUMMER
- EIC — ELECTRICAL INDICATOR CONTROLLER
- IF — INSULATED FLANGE
- AC — AUTOMATIC CONTROL CABINET
- LE — LEVEL ELEMENT (LEVEL PROBE)
- SC — SAMPLE COOLER
- FE — FLOW NOZZLE SECTION
- FE — FLOW ORIFICE SECTION

TYPICAL PIPING SYMBOLS

- RUPTURE DIAPHRAGM
- INSIDE SHIELDED AREA / PENETRATION OF SHIELD WALL
- EXPANSION JOINT
- STRAINER (Y PATTERN)
- STRAINER
- STRAINER (ANGLE PATTERN)
- DUPLEX STRAINER
- FLEXIBLE HOSE
- QUICK DISCONNECT
- FILTER PRV SET
- OPEN FUNNEL DRAIN
- REDUCER
- T — TRAP

VALVE SYMBOLS

- GATE VALVE NORMALLY OPEN (TYP)
- GATE VALVE NORMALLY CLOSED (TYP)
- GLOBE VALVE
- PLUG VALVE
- CHECK VALVE
- ANGLE VALVE
- SET @ ___ PSIG — PRESSURE REGULATING VALVE (SELF CONTAINED)
- SET @ ___ PSIG — SAFETY OR RELIEF VALVE
- BUTTERFLY VALVE
- THREE WAY VALVE
- STOP CHECK VALVE
- QUICK OPENING VALVE
- HOSE VALVE GATE
- HOSE VALVE GLOBE
- HOSE VALVE ANGLE
- NEEDLE VALVE
- SAUNDERS (WEIR TYPE)
- BALL VALVE
- FLOW LIMITING CHECK
- SPRING LOAD TRIP OPEN DC POWERED CLOSING VALVE

OPERATOR SYMBOLS FOR VALVES DAMPERS, ETC

(SHOWN FOR TYPICAL VALVE)

- PNEUMATIC DIAPHRAGM OPERATOR
- MO — ELECTRIC MOTOR OPERATOR
- AO — PNEUMATIC OPERATOR
- HO — HYDRAULIC OPERATOR
- PoS — MANUAL EXTENSION OPERATOR
- MANUAL OPERATED VALVE WITH POSITION SWITCH

SOLENOID VALVES

- 2 WAY (SHOWN ENERGIZED OR DE ENERGIZED)
- CLOSED PORT IN OPPOSITE MODE — 3 WAY (SHOWN DE ENERGIZED) — CLOSED PORT IN SHOWN MODE
- 4 WAY SHOWN DE ENERGIZED

LINE SYMBOLS

- PRIMARY (FURN & INSTALLED BY PC)
- SECONDARY (FURNISHED & INSTALLED BY PC)
- PRIMARY {FURN & INSTALLED BY OTHERS / UNLESS OTHERWISE NOTED}
- SECONDARY {FURN & INSTALLED BY OTHERS / UNLESS OTHERWISE NOTED}
- IA INSTRUMENT AIR SUPPLY TUBING / IN INSTRUMENT NITROGEN SUPPLY TUBING
- INSTRUMENT CAPILLARY TUBING
- INSTRUMENT ELECTRICAL LEADS
- ELECTRICALLY HEAT TRACED LINES
- FURNISHED WITH ASSOC EQUIPMENT
- RADIOGRAPHY UP TO BUT NOT INCLUDING LINE ON WHICH ◁ IS LOCATED SEE APPLICABLE NOTES ON DIAGRAM

FLOW: PX — LOCAL PRESSURE TEST; P — LOCAL OR TRANSMITTED PRESSURE; TX — LOCAL TEMPERATURE TEST; TE — TRANSMITTED TEMPERATURE

INDEX OF PIPING SYSTEM ABBREVIATIONS

D — DRAINS
DO — DIESEL OIL
DSC — DRYWELL SPRAY COOLING
ES — EXTRACTION STEAM
FO — FUEL OIL
FP — FIRE PROTECTIONS
FPC — FUEL POOL COOLING
H — HYDROGEN
HC — HEATING CONDENSATE
HD — HEATER DRAIN
HS — HEATING STEAM
IA — INSTRUMENT AIR
IC — ISOLATION CONDENSING
MS — MAIN STEAM
PIC — POST INCIDENT COOLING
RBCW — REACTOR BUILDING COOLING WATER
RD — RADWASTE DEMINERALIZING
RDF — ROD DRIVE FEED WATER
RF — REACTOR FEED
RW — RADWASTE
C — CONDENSATE
CD — CLEAN UP DEMINERALIZING
CSC — CORE SPRAY COOLING
CW — CIRCULATING WATER
SWW — SCREEN WASH WATER
TBCW — TURBINE BUILDING COOLING WATER
TO — TURBINE OIL
V — VENTS
VAE — VENTILATION AIR EXHAUST
VAS — VENTILATION AIR SUPPLY
RBEDS — REATOR BUILDING EQUIPMENT DRAIN SUMP
AL — AIR LOCK
AS — AIR SUPPLY
FC — FAILS CLOSED
FO — FAILS OPEN

M — MANUAL CONTROL STATION
M/A — MANUAL AUTOMATIC CONTROL STATION
NC — NORMALLY CLOSED
NO — NORMALLY OPEN
PB — PUSH BUTTON
SS — SELECTOR SWITCH
RM — REMOTE OPERATED
MV/I — MILLIVOLT TO CURRENT
SA — SERVICE AIR
SC — SHUTDOWN COOLING
SLC — STANDBY LIQUID CONTROL
SW — SERVICE WATER

ORIENTATION OF INSTRUMENTS ON PIPING

EXPLANATION OF PIPE LINE DESIGNATION NUMBER

EXAMPLE

2 3206 B 6 L

- UNIT NO
- SYSTEM NO
- LINE NO
- BRANCH NO
- PIPING SIZE DESIGN TABLE REF
- SIZE

LEGEND FOR SAFETY RELATED P&IDS

- S — INDICATES A BOUNDARY BETWEEN SAFETY AND NON SAFETY RELATED PIPING THE HALF ELIPSE WILL CONTAIN THE PIPING CLASSIFICATION AS LISTED BELOW
- 1 — CLASS 1
- 2 — CLASS 2
- 3 — CLASS 3
- DC — SEISMIC QUALIFICATION EITHER DOWNSTREAM OF OPEN ROOT VALVE OR ASSOCIATED WITH THIS PIPING AND COMPONENTS IS PER THE ORIGINAL DESIGN
- MC — CLASS MC

"K"

▶ — INDICATES SAFETY RELATED INSTRUMENTS AND VALVE OPERATORS. LINES LEADING TO SAFETY RELATED INSTRUMENTS AND OPERATORS ARE ALSO SAFETY RELATED

NOTE THE DRYWELL TORUS AND ALL PENETRATIONS THROUGH THOSE AREAS ARE SAFETY RELATED

ANY MODIFICATION OR ADDITION TO THIS DRAWING BY AN ORGANIZATION OTHER THAN SARGENT & LUNDY IS NOT THE RESPONSIBILITY OF SARGENT & LUNDY

REV	DATE	DESCRIPTION	PREP	REVR	APPR
K	06/27/82	REVISED FOR 4TH INTERVAL	WES	TMG	DWL

Exelon. Nuclear — Dresden Station 10 Units 2&3

PIPING & INSTRUMENT SYMBOLS

SCALE NONE
DATE
DRAWN BY
ORG. BY CSRZ

M-11

SHEET NUMBER 2 SIZE F

ASME SECTION XI INSERVICE INSPECTION CLASSIFICATION

CODING	DESCRIPTION
	ASME CLASS 1
	CLASS 1 COMPONENTS SUBJECT TO VOLUMETRIC EXAMINATION, SURFACE EXAMINATION, AND VISUAL EXAMINATION PER IWB-1000 AND PRESSURE TESTS PER IWB-5000. SUPPORTS OF THESE COMPONENTS ARE SUBJECT TO VISUAL EXAMINATION PER IWF-2510.
	CLASS 1 COMPONENTS SUBJECT TO PRESSURE TESTS PER IWB-5000, BUT EXEMPT FROM VOLUMETRIC AND SURFACE EXAMINATION PER IWB-1220(b) (1) AND (2): PIPING OF 1 IN. NOMINAL PIPE SIZE AND SMALLER AND COMPONENTS AND THEIR CONNECTIONS IN PIPING OF 1 IN. NOMINAL PIPE SIZE AND SMALLER. SUPPORTS OF THESE COMPONENTS ARE EXEMPT FROM VISUAL EXAMINATION PER IWF-1230.
	CLASS 1 COMPONENTS SUBJECT TO PRESSURE TESTS PER IWB-5000, BUT EXEMPT FROM VOLUMETRIC AND SURFACE EXAMINATION PER IWB-1220(a): REACTOR COOLANT PRESSURE BOUNDARY COMPONENTS WHOSE POSTULATED COOLANT LOSS RESULTING FROM RUPTURE IS WITHIN THE CAPACITY OF NORMAL MAKEUP SYSTEMS WHICH ARE OPERABLE FROM EMERGENCY ON-SITE POWER. (FLUID CONTAINING COMPONENTS). SUPPORTS OF THESE COMPONENTS ARE EXEMPT FROM EXAMINATION PER IWF-1230.
	CLASS 1 COMPONENTS SUBJECT TO PRESSURE TESTS PER IWB-5000, BUT EXEMPT FROM VOLUMETRIC AND SURFACE EXAMINATION PER IWB-1220(a): REACTOR COOLANT PRESSURE BOUNDARY COMPONENTS WHOSE POSTULATED COOLANT LOSS RESULTING FROM RUPTURE IS WITHIN THE CAPACITY OF NORMAL MAKEUP SYSTEMS WHICH ARE OPERABLE FROM EMERGENCY ON-SITE POWER. (STEAM CONTAINING COMPONENTS). SUPPORTS OF THESE COMPONENTS ARE EXEMPT FROM VISUAL EXAMINATION PER IWF-1230.
	CLASS 1 COMPONENTS SUBJECT TO PRESSURE TESTS PER IWB-5000, BUT EXEMPT FROM VOLUMETRIC AND SURFACE EXAMINATION PER IWB-1220(c): REACTOR VESSEL HEAD CONNECTIONS AND ASSOCIATED PIPING, 2 IN. NOMINAL PIPE SIZE AND SMALLER, MADE INACCESSIBLE BY CONTROL ROD DRIVE PENETRATIONS. SUPPORTS OF THESE COMPONENTS ARE EXEMPT FROM VISUAL EXAMINATION PER IWF-1230.
	ASME CLASS 2
	CLASS 2 COMPONENTS SUBJECT TO VOLUMETRIC EXAMINATION AND SURFACE EXAMINATION PER IWC-1000 AND PRESSURE TESTS PER IWC-5000. SUPPORTS OF THESE COMPONENTS ARE SUBJECT TO VISUAL EXAMINATION PER IWF-2510.
	CLASS 2 COMPONENTS SUBJECT TO PRESSURE TESTS PER IWC-5000, BUT EXEMPT FROM VOLUMETRIC AND SURFACE EXAMINATION PER IWC-1221(a) & (c) OR IWC-1222(a) & (b): FOR SYSTEM PIPING 4 IN. NOMINAL PIPE SIZE AND SMALLER AND VESSELS, PUMPS, VALVES, AND THEIR CONNECTIONS IN PIPING 4 IN. NOMINAL PIPE SIZE AND SMALLER. SUPPORTS OF THESE COMPONENTS ARE EXEMPT FROM VISUAL EXAMINATION PER IWF-1230.
	CLASS 2 COMPONENTS SUBJECT TO PRESSURE TESTS PER IWC-5000, BUT EXEMPT FROM VOLUMETRIC AND SURFACE EXAMINATION PER IWC-1221(d) OR IWC-1222(d): PIPING AND OTHER COMPONENTS OF ANY SIZE BEYOND THE LAST SHUTOFF VALVE IN OPEN ENDED PORTIONS OF SYSTEMS THAT DO NOT CONTAIN WATER DURING NORMAL PLANT OPERATING CONDITIONS. SUPPORTS OF THESE COMPONENTS ARE EXEMPT FROM VISUAL EXAMINATION PER IWF-1230. **NOTE:** NORMAL PLANT OPERATING CONDITIONS INCLUDE REACTOR STARTUP, OPERATION AT POWER, HOT STANDBY, AND REACTOR COOLDOWN TO COLD SHUTDOWN CONDITIONS, BUT DO NOT INCLUDE TEST CONDITIONS.
	CLASS 2 COMPONENTS IN SYSTEMS OR PORTIONS OF SYSTEMS OTHER THAN RESIDUAL HEAT REMOVAL, EMERGENCY CORE COOLING, AND CONTAINMENT HEAT REMOVAL SYSTEMS, SUBJECT TO PRESSURE TESTS PER IWC-5000, BUT EXEMPT FROM VOLUMETRIC AND SURFACE EXAMINATION PER IWC-1222(c): VESSELS, PIPING, PUMPS, VALVES, OTHER COMPONENTS, AND COMPONENT CONNECTIONS OF ANY SIZE IN SYSTEMS OR PORTIONS OF SYSTEMS THAT OPERATE (WHEN THE SYSTEM FUNCTION IS REQUIRED) AT A PRESSURE EQUAL TO OR LESS THAN 275 psig AND AT A TEMPERATURE EQUAL TO OR LESS THAN 200° F. SUPPORTS OF THESE COMPONENTS ARE EXEMPT FROM VISUAL EXAMINATION PER IWF-1230.
	CLASS 2 PIPING GREATER THAN 4 IN. NOMINAL PIPE SIZE WITH WALL THICKNESS LESS THAN 3/8 IN. SUBJECT TO PRESSURE TESTS PER IWC-5000 AND POTENTIALLY SUBJECT TO VOLUMETRIC EXAMINATION PER EPRI TR-112657, REVISION B-A, AND ASME CODE CASE N-578-1. (PRIOR TO THE IMPLEMENTATION OF RISK-INFORMED ISI AT DRESDEN STATION, THIS PIPING WAS NOT REQUIRED TO BE EXAMINED UNDER SECTION XI CATEGORIES C-F-1 OR C-F-2.) SUPPORTS OF THIS PIPING ARE SUBJECT TO VISUAL EXAMINATION PER IWF-2510.
	ASME CLASS 3
	CLASS 3 COMPONENTS SUBJECT TO VISUAL EXAMINATION PER IWD-1000 AND PRESSURE TESTS PER IWD-5000. SUPPORTS OF THESE COMPONENTS ARE SUBJECT TO VISUAL EXAMINATION PER IWF-2510.
	CLASS 3 COMPONENTS SUBJECT TO PRESSURE TESTS PER IWD-5000, BUT EXEMPT FROM VISUAL EXAMINATION PER IWD-1220(a) (1) AND (2): FOR SYSTEM PIPING 4 IN. NOMINAL PIPE SIZE AND SMALLER AND VESSELS, PUMPS, VALVES, AND THEIR CONNECTIONS IN PIPING 4 IN. NOMINAL PIPE SIZE AND SMALLER. SUPPORTS OF THESE COMPONENTS ARE EXEMPT FROM VISUAL EXAMINATION PER IWF-1230.
	CLASS 3 COMPONENTS SUBJECT TO PRESSURE TESTS PER IWD-5000, BUT EXEMPT FROM VISUAL EXAMINATION PER IWD-1220(c): COMPONENTS THAT OPERATE AT A PRESSURE OF 275 psig OR LESS AND AT A TEMPERATURE OF 200° F OR LESS IN SYSTEMS (OR PORTIONS OF SYSTEMS) WHOSE FUNCTION IS NOT REQUIRED IN SUPPORT OF REACTOR RESIDUAL HEAT REMOVAL, CONTAINMENT HEAT REMOVAL, AND EMERGENCY CORE COOLING. SUPPORTS OF THESE COMPONENTS ARE EXEMPT FROM VISUAL EXAMINATION PER IWF-1230.
	CLASS 3 COMPONENTS SUBJECT TO PRESSURE TESTS PER IWD-5000, BUT EXEMPT FROM VISUAL EXAMINATION PER IWD-1220(d): WELDS OR PORTIONS OF WELDS THAT ARE INACCESSIBLE DUE TO BEING ENCASED IN CONCRETE, BURIED UNDERGROUND, LOCATED INSIDE A PENETRATION OR ENCAPSULATED BY GUARD PIPE. SUPPORTS OF THESE COMPONENTS ARE EXEMPT FROM VISUAL EXAMINATION PER IWF-1230.

NOTES:

1. THIS LEGENDS AND SYMBOLS DRAWING APPLIES TO THE UNIT 2 AND UNIT 3 ISI CLASSIFICATION BOUNDARY DRAWINGS FOR THE FOURTH TEN YEAR INSPECTION INTERVAL.
2. ALL REFERENCES TO ASME SECTION XI ARE PER THE 1995 EDITION, 1996 ADDENDA.
3. CODE CLASSIFICATION CHANGES ARE TYPICALLY SHOWN AT THE VALVE SEAT ALTHOUGH THE VALVE'S EXAMINATION REQUIREMENTS ARE DETERMINED IN ACCORDANCE WITH THE HIGHER CLASS.
4. WHERE INSTRUMENTATION IS NOT COLOR CODED, IT SHOULD BE ASSUMED TO BE THE SAME ISI CLASSIFICATION AS THE ATTACHED PIPING OR TUBING.

C01

REV	DATE	DESCRIPTION	PREP.	REVR.	APPR.
C	06/27/02	REVISED FOR 4TH INTERVAL	MES	TMG	DWL

Exelon. Nuclear
Dresden Station 12 Units 2&3

ISI CODING LEGEND
INTERVAL 4
ISI CLASSIFICATION BOUNDARY DWG.

SCALE : NONE
DATE : --/--/--
DRAWN BY : --/--/--
ORG. BY : C582

M-11

SHEET NUMBER: 3 SIZE: D

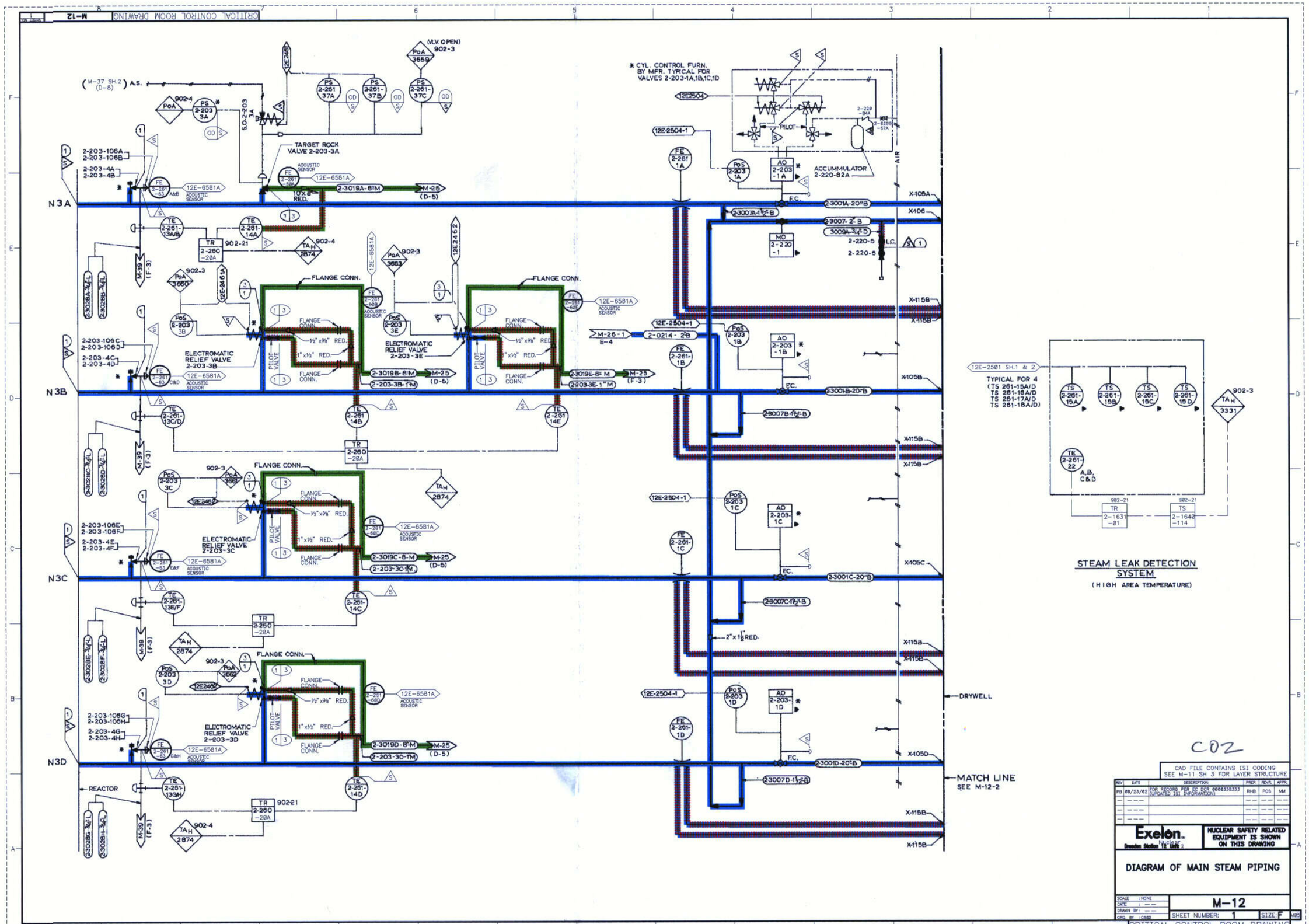
CRITICAL CONTROL ROOM DRAWING
M-12
N3A
N3B
N3C
N3D
TARGET ROCK VALVE 2-203-3A
ELECTROMATIC RELIEF VALVE 2-203-3B
ELECTROMATIC RELIEF VALVE 2-203-3E
ELECTROMATIC RELIEF VALVE 2-203-3C
ELECTROMATIC RELIEF VALVE 2-203-3D
FLANGE CONN.
PILOT VALVE
* CYL. CONTROL FURN. BY MFR. TYPICAL FOR VALVES 2-203-1A,1B,1C,1D
ACCUMMULATOR 2-220-82A
DRYWELL
MATCH LINE SEE M-12-2
REACTOR
STEAM LEAK DETECTION SYSTEM
(HIGH AREA TEMPERATURE)
TYPICAL FOR 4 (TS 261-15A/D TS 261-16A/D TS 261-17A/D TS 261-18A/D)
C02
CAD FILE CONTAINS ISI CODING SEE M-11 SH 3 FOR LAYER STRUCTURE
Exelon. Nuclear
Dresden Station 2 & 3
NUCLEAR SAFETY RELATED EQUIPMENT IS SHOWN ON THIS DRAWING
DIAGRAM OF MAIN STEAM PIPING
M-12
SHEET NUMBER: 1
SIZE: F
CRITICAL CONTROL ROOM DRAWING

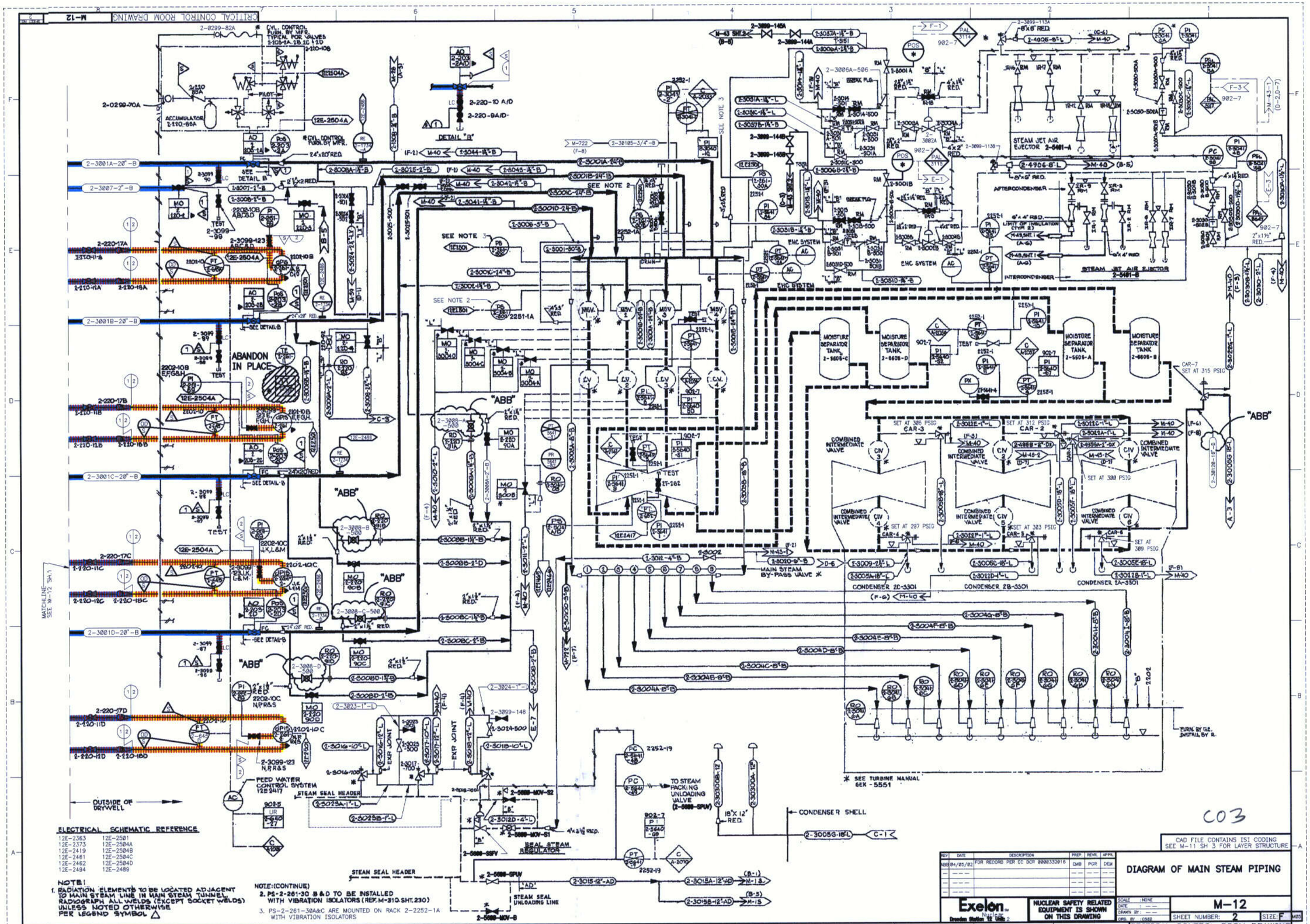

ELECTRICAL SCHEMATIC REFERENCE

12E-2363	12E-2501
12E-2373	12E-2504A
12E-2419	12E-2504B
12E-2461	12E-2504C
12E-2462	12E-2504D
12E-2494	12E-2489

NOTE:
1. RADIATION ELEMENTS TO BE LOCATED ADJACENT TO MAIN STEAM LINE IN MAIN STEAM TUNNEL. RADIOGRAPH ALL WELDS (EXCEPT SOCKET WELDS) UNLESS NOTED OTHERWISE PER LEGEND SYMBOL △

NOTE:(CONTINUE)
2. PS-2-261-30 B&D TO BE INSTALLED WITH VIBRATION ISOLATORS (REF. M-310 SHT. 230)
3. PS-2-261-30A&C ARE MOUNTED ON RACK 2-2252-1A WITH VIBRATION ISOLATORS

CAD FILE CONTAINS ISI CODING SEE M-11 SH 3 FOR LAYER STRUCTURE

REV	DATE	DESCRIPTION	PREP.	REVIL	APPR.
ABB	04/05/02	FOR RECORD PER EC DCR 0000332018	DMB	PGR	DEM

DIAGRAM OF MAIN STEAM PIPING

Exelon. Nuclear — Dresden Station 2 & Unit 2

NUCLEAR SAFETY RELATED EQUIPMENT IS SHOWN ON THIS DRAWING

SCALE: NONE
DATE: — —
DRAWN BY: — —
ORG. BY: (C)2002

M-12

SHEET NUMBER: 2 SIZE: F

CRITICAL CONTROL ROOM DRAWING

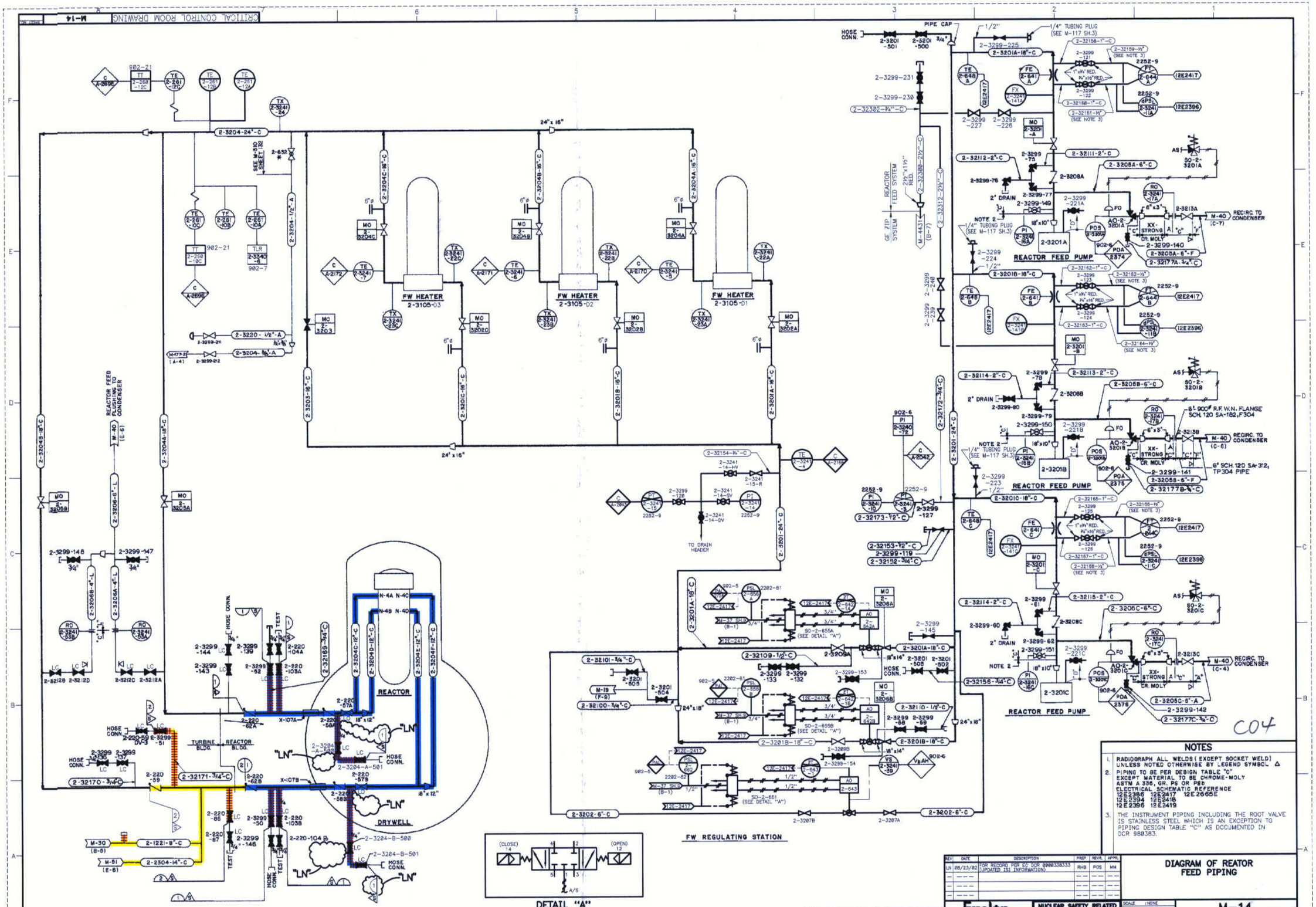
FW HEATER 2-3105-D3
FW HEATER 2-3105-D2
FW HEATER 2-3105-D1
REACTOR FEED PUMP
REACTOR FEED PUMP
REACTOR FEED PUMP
REACTOR FEED PUMPS TO CONDENSER
REACTOR
DRYWELL
TURBINE BLDG.
REACTOR BLDG.
FW REGULATING STATION
REACTOR FEED SYSTEM
GE ZIP SYSTEM
RECIRC. TO CONDENSER
TO DRAIN HEADER
DETAIL "A"
SOLENOID VALVE DIAGRAM
NOTES
1. RADIOGRAPH ALL WELDS (EXCEPT SOCKET WELD) UNLESS NOTED OTHERWISE BY LEGEND SYMBOL △
2. PIPING TO BE PER DESIGN TABLE "C" EXCEPT MATERIAL TO BE CHROME-MOLY ASTM A 336, GR. P5 OR P9B
ELECTRICAL SCHEMATIC REFERENCE
12E2386 12E2417 12E2665E
12E2394 12E2416
12E2396 12E2419
3. THE INSTRUMENT PIPING INCLUDING THE ROOT VALVE IS STAINLESS STEEL WHICH IS AN EXCEPTION TO PIPING DESIGN TABLE "C" AS DOCUMENTED IN DCR 980383.
DIAGRAM OF REATOR FEED PIPING
M-14
Exelon Nuclear
Dresden Station 18 Units 2
NUCLEAR SAFETY RELATED EQUIPMENT IS SHOWN ON THIS DRAWING
CAD FILE CONTAINS ISI CODING SEE M-11 SH 3 FOR LAYER STRUCTURE
CRITICAL CONTROL ROOM DRAWING

C04

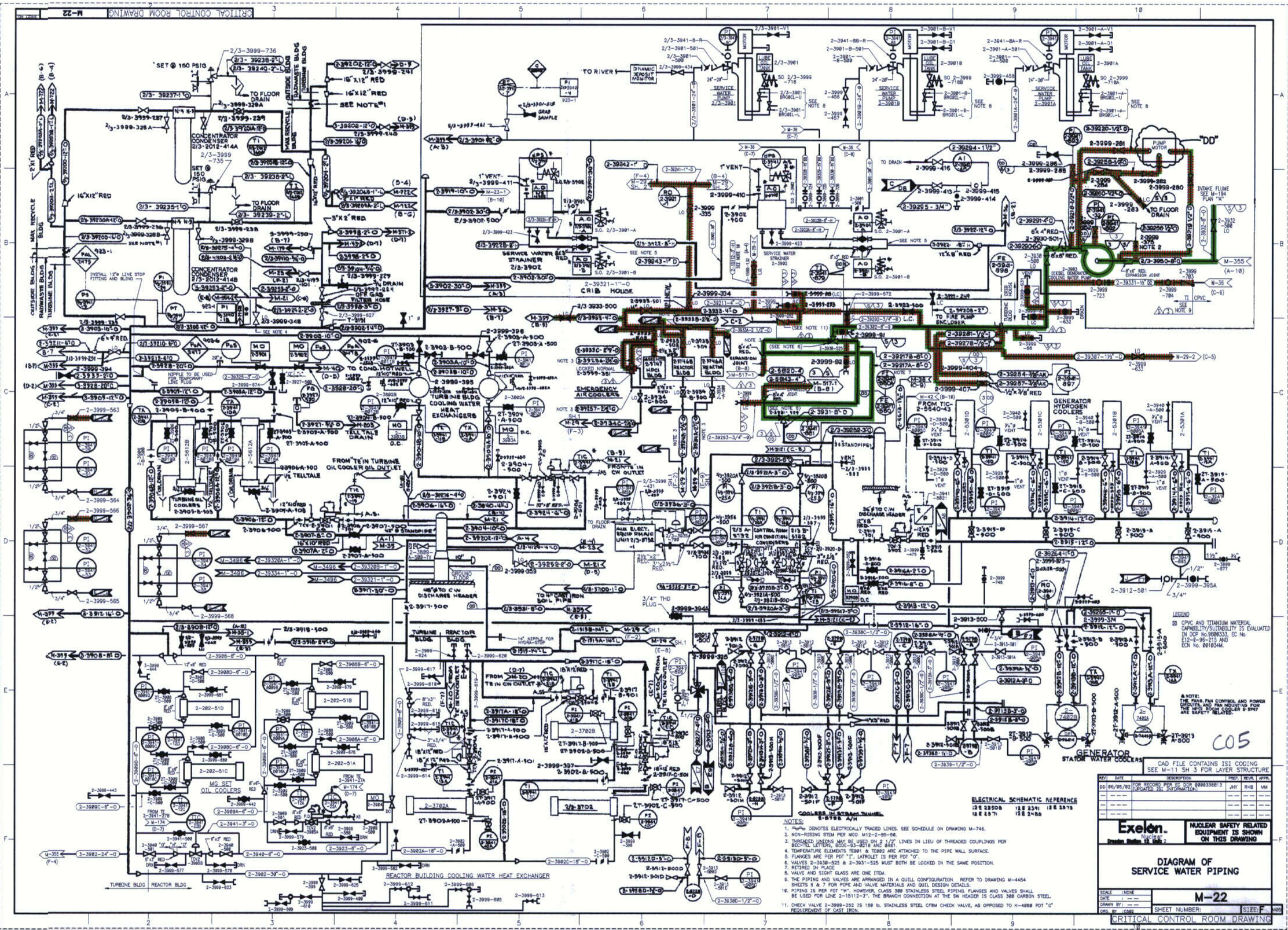
CRITICAL CONTROL ROOM DRAWING
M-22
CRIB HOUSE
TO RIVER
SERVICE WATER STRAINER 2/3-3902
SERVICE WATER STRAINER 2-3902
CONCENTRATOR CONDENSER 2/3-2012-414A
CONCENTRATOR CONDENSER 2/3-2012-414B
TO COND. HOTWELL
TELL TALE DRAIN
COOLING WATER HEAT EXCHANGERS
EMERGENCY AIR COOLERS
TURBINE OIL COOLERS
MG SET OIL COOLERS
REACTOR BUILDING COOLING WATER HEAT EXCHANGER
GENERATOR HYDROGEN COOLERS
GENERATOR STATOR WATER COOLERS
TO FIRE PUMP ENCLOSURE
INTAKE FLUME SEE M-194 PLAN "A"
"DD"
TO FLOOR DRAIN
TO DRAIN
OFF GAS FILTER HOSE
INSTALL 12" LINE STOP FITTING AND BLIND
NIPPLE TO BE USED FOR TEMPORARY LINE PLUG
TURBINE BLDG
REACTOR BLDG
OUTSIDE BLDG
RADWASTE BLDG
TURBINE BLDG
MAIN RECYCLE BLDG
LEGEND
CPVC AND TITANIUM MATERIAL CAPABILITY/SUITABILITY IS EVALUATED IN DCP No.9800333, EC No. E12-8-96-215 AND EEN No. 001034M.
NOTE: THE FANS, FAN CONTROL AND POWER CIRCUITS, AND FAN MOUNTING FOR THE HPCI ROOM COOLER 2-5947 ARE SAFETY RELATED.
C05
ELECTRICAL SCHEMATIC REFERENCE
12E 2350B 12E 2391 12E 2373
12E 2571 12E 2486
NOTES:
1. DENOTES ELECTRICALLY TRACED LINES. SEE SCHEDULE ON DRAWING M-746.
2. NON-RISING STEM PER MOD. M12-2-85-50.
3. THREADED UNIONS MAY BE USED ON 1" AND 3/4" LINES IN LIEU OF THREADED COUPLINGS PER BECHTEL LET EMAIL, SHOW 93-0218 AND 93-0219.
4. TEMPERATURE ELEMENTS TE001 & TE002 ARE ATTACHED TO THE PIPE WALL SURFACE.
5. FLANGES ARE PER POT "T". LATROLET IS PER POT "O".
6. VALVES 2-3938-525 & 2-3931-525 MUST BOTH BE LOCKED IN THE SAME POSITION.
7. RETIRED IN PLACE.
8. VALVE AND SIGHT GLASS ARE ONE ITEM.
9. THE PIPING AND VALVES ARE ARRANGED IN A QUILL CONFIGURATION. REFER TO DRAWING M-4454 SHEETS 6 & 7 FOR PIPE AND VALVE MATERIALS AND QUIL DESIGN DETAILS.
10. PIPING IS PER POT "H", HOWEVER, CLASS 300 STAINLESS STEEL PIPING, FLANGES AND VALVES SHALL BE USED FOR LINE 2-15112-3". THE BRANCH CONNECTION AT THE SW HEADER IS CLASS 300 CARBON STEEL.
11. CHECK VALVE 2-3999-252 IS 150 lb. STAINLESS STEEL CFBM CHECK VALVE, AS OPPOSED TO K-4088 POT "O" REQUIREMENT OF CAST IRON.
CAD FILE CONTAINS ISI CODING SEE M-11 SH 3 FOR LAYER STRUCTURE
REV DATE DESCRIPTION PREP. REVR. APPR.
DD 06/05/02 FOR RECORD PER EC DCP 000033081 3 (UPDATED ISI INFORMATION) JHY RHB MM
Exelon. Nuclear
Dresden Station U1 U2
NUCLEAR SAFETY RELATED EQUIPMENT IS SHOWN ON THIS DRAWING
DIAGRAM OF SERVICE WATER PIPING
SCALE :NONE
DATE : --
DRAWN BY : --
ORG. BY :C382
M-22
SHEET NUMBER:
SIZE: F
CRITICAL CONTROL ROOM DRAWING

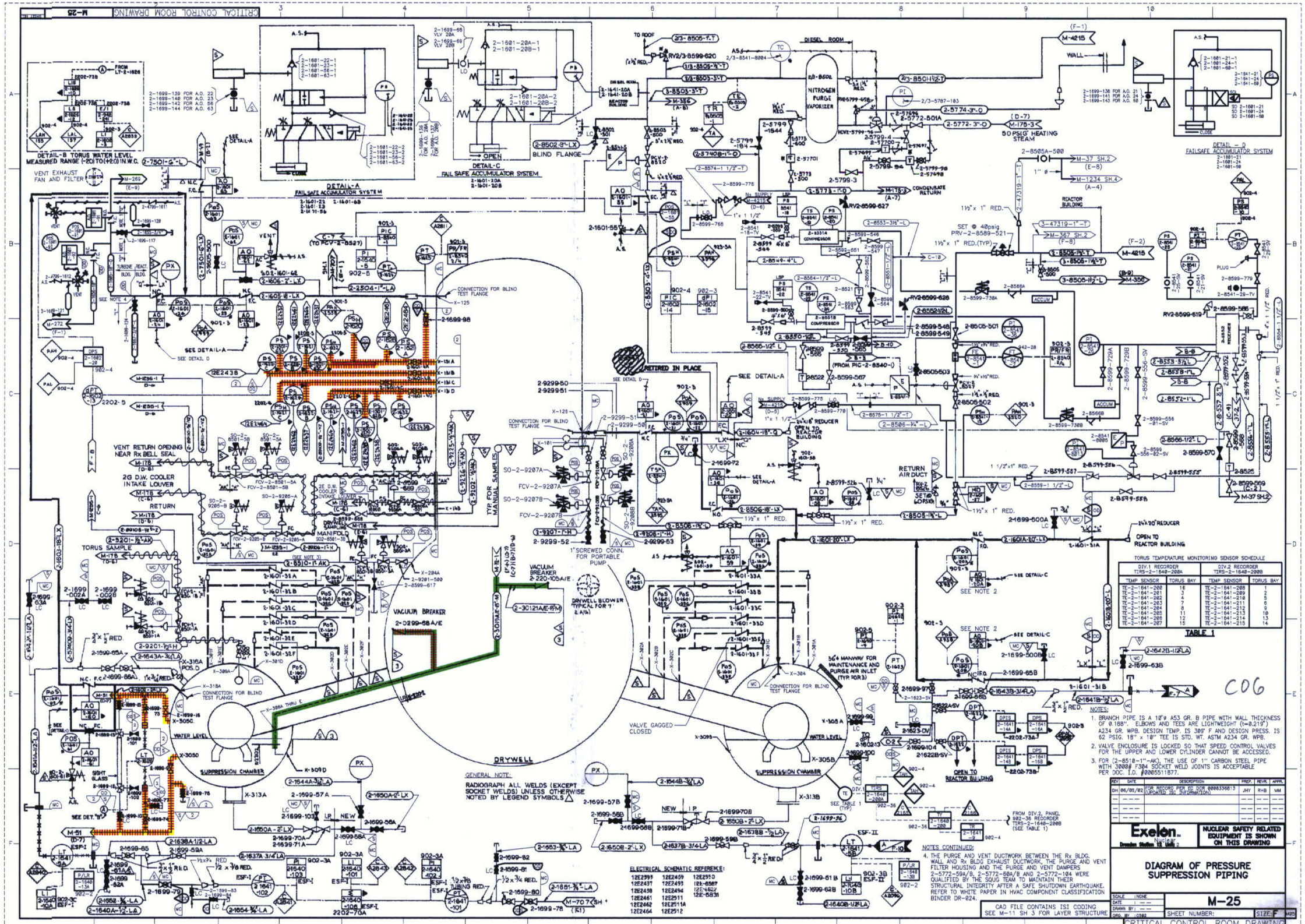

TORUS TEMPERATURE MONITORING SENSOR SCHEDULE

DIV.1 RECORDER TIRS-2-1640-200A		DIV.2 RECORDER TIRS-2-1640-200B	
TEMP SENSOR	TORUS BAY	TEMP SENSOR	TORUS BAY
TE-2-1641-200	16	TE-2-1641-208	1
TE-2-1641-201	3	TE-2-1641-209	2
TE-2-1641-202	4	TE-2-1641-210	5
TE-2-1641-203	7	TE-2-1641-211	6
TE-2-1641-204	8	TE-2-1641-212	9
TE-2-1641-205	11	TE-2-1641-213	10
TE-2-1641-206	12	TE-2-1641-214	13
TE-2-1641-207	15	TE-2-1641-215	14

TABLE 1

NOTES:

1. BRANCH PIPE IS A 18"ø A53 GR. B PIPE WITH WALL THICKNESS OF 0.188". ELBOWS AND TEES ARE LIGHTWEIGHT (t=0.219") A234 GR. WPB. DESIGN TEMP. IS 309° F AND DESIGN PRESS. IS 62 PSIG. 18" x 18" TEE IS STD. WT. ASTM A234 GR. WPB.
2. VALVE ENCLOSURE IS LOCKED SO THAT SPEED CONTROL VALVES FOR THE UPPER AND LOWER CYLINDER CANNOT BE ACCESSED.
3. FOR (2-8518-1"-AK), THE USE OF 1" CARBON STEEL PIPE WITH 3000# F304 SOCKET WELD JOINTS IS ACCEPTABLE PER DOC. I.D. #00055511B77.

NOTES CONTINUED:

4. THE PURGE AND VENT DUCTWORK BETWEEN THE Rx BLDG. WALL AND Rx BLDG EXHAUST DUCTWORK, THE PURGE AND VENT FILTER HOUSING AND THE PURGE AND VENT DAMPERS 2-5772-59A/B, 2-5772-60A/B AND 2-5772-104 WERE QUALIFIED BY THE SQUG TEAM TO MAINTAIN THEIR STRUCTURAL INTEGRITY AFTER A SAFE SHUTDOWN EARTHQUAKE. REFER TO WHITE PAPER IN HVAC COMPONENT CLASSIFICATION BINDER DR-024.

GENERAL NOTE:

RADIOGRAPH ALL WELDS (EXCEPT SOCKET WELDS) UNLESS OTHERWISE NOTED BY LEGEND SYMBOLS △

ELECTRICAL SCHEMATIC REFERENCE:

12E2399 12E2459 12E2550
12E2437 12E2493 12E-8587
12E2438 12E2494 12E-8587
12E2461 12E2511 12E-8831
12E2462 12E2511A
12E2464 12E2512

CAD FILE CONTAINS ISI CODING
SEE M-11 SH 3 FOR LAYER STRUCTURE

REV	DATE	DESCRIPTION	PREP.	REVR.	APPR.
DH	06/05/02	FOR RECORD PER EC DCR 000033813 (UPDATED ISI INFORMATION)	JHY	RHB	VM
—	— —		— —	— —	— —
—	— —		— —	— —	— —
—	— —		— —	— —	— —
—	— —		— —	— —	— —

Exelon. Dresden Station UNIT 2

NUCLEAR SAFETY RELATED EQUIPMENT IS SHOWN ON THIS DRAWING

DIAGRAM OF PRESSURE SUPPRESSION PIPING

SCALE: NONE
DATE: — —
DRAWN BY: — —
ORG. ID: CGBD

M-25

SHEET NUMBER: SIZE: F

CRITICAL CONTROL ROOM DRAWING

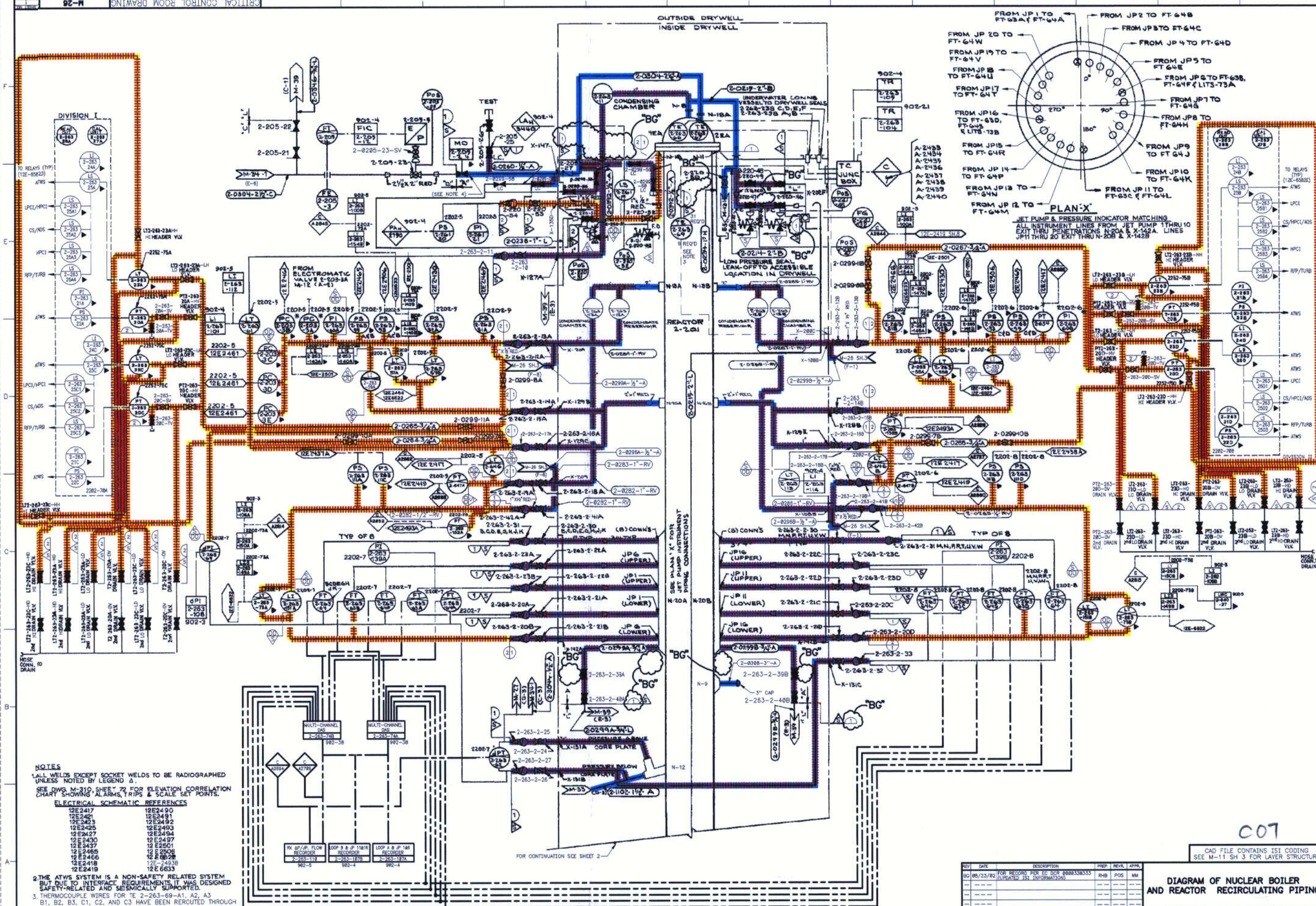

NOTES

1. ALL WELDS EXCEPT SOCKET WELDS TO BE RADIOGRAPHED UNLESS NOTED BY LEGEND Δ.
   SEE DWG. M-310, SHEET 2 FOR ELEVATION CORRELATION CHART SHOWING ALARMS, TRIPS & SCALE SET POINTS.

ELECTRICAL SCHEMATIC REFERENCES

12E2417	12E2490
12E2421	12E2491
12E2423	12E2492
12E2425	12E2493
12E2427	12E2494
12E2430	12E2497
12E2437	12E2501
12E2465	12E2506
12E2466	12E6629
12E2418	12E-2493B
12E2419	12E6633

2. THE ATWS SYSTEM IS A NON-SAFETY RELATED SYSTEM BUT DUE TO INTERFACE REQUIREMENTS IT WAS DESIGNED SAFETY-RELATED AND SEISMICALLY SUPPORTED.
3. THERMOCOUPLE WIRES FOR TE 2-263-69-A1, A2, A3 B1, B2, B3, C1, C2, AND C3 HAVE BEEN REROUTED THROUGH INSTRUMENT PENETRATION X-200C.
4. HOLE HAS BEEN DRILLED IN VALVE DISK ON REACTOR VESSEL SIDE TO PREVENT PRESSURE LOCKING.

C07

CAD FILE CONTAINS ISI CODING
SEE M-11 SH 3 FOR LAYER STRUCTURE

REV	DATE	DESCRIPTION	PREP	REVR	APPR
BG	08/23/02	FOR RECORD PER EC DCR 00003383333 (UPDATED ISI INFORMATION)	RHB	POS	MM

Exelon. Nuclear
Dresden Station 2 & Unit 2

NUCLEAR SAFETY RELATED EQUIPMENT IS SHOWN ON THIS DRAWING

DIAGRAM OF NUCLEAR BOILER AND REACTOR RECIRCULATING PIPING

SCALE : NONE
DATE : — —
DRAWN BY : — —
CHKD BY : CSRD

M-26

SHEET NUMBER: 1 SIZE: F

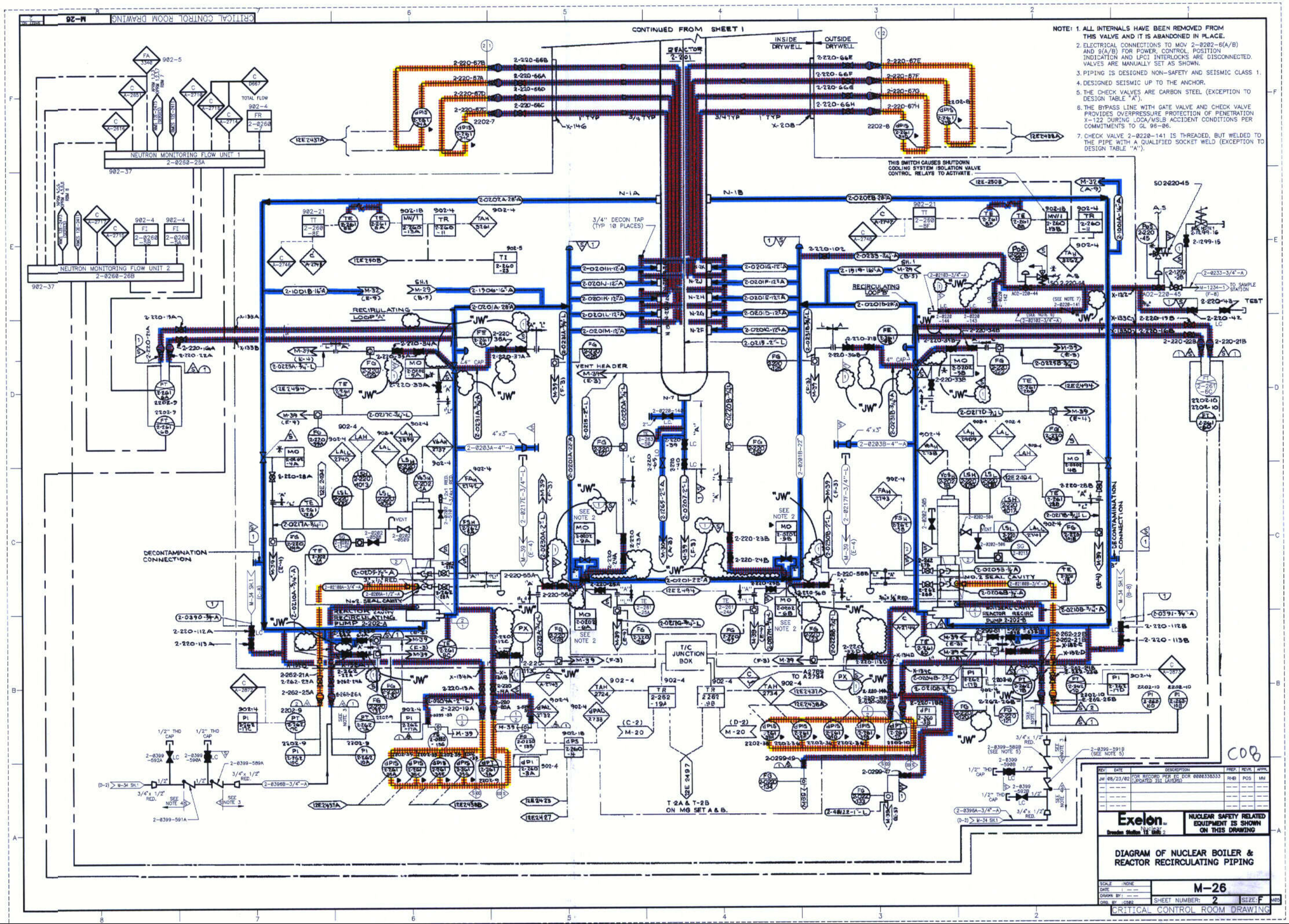
CRITICAL CONTROL ROOM DRAWING
M-26
CONTINUED FROM SHEET 1
REACTOR 2-201
INSIDE DRYWELL
OUTSIDE DRYWELL
NOTE: 1. ALL INTERNALS HAVE BEEN REMOVED FROM THIS VALVE AND IT IS ABANDONED IN PLACE.
2. ELECTRICAL CONNECTIONS TO MOV 2-0202-6(A/B) AND 9(A/B) FOR POWER, CONTROL, POSITION INDICATION AND LPCI INTERLOCKS ARE DISCONNECTED. VALVES ARE MANUALLY SET AS SHOWN.
3. PIPING IS DESIGNED NON-SAFETY AND SEISMIC CLASS 1.
4. DESIGNED SEISMIC UP TO THE ANCHOR.
5. THE CHECK VALVES ARE CARBON STEEL (EXCEPTION TO DESIGN TABLE "A").
6. THE BYPASS LINE WITH GATE VALVE AND CHECK VALVE PROVIDES OVERPRESSURE PROTECTION OF PENETRATION X-122 DURING LOCA/MSLB ACCIDENT CONDITIONS PER COMMITMENTS TO GL 96-06.
7. CHECK VALVE 2-0220-141 IS THREADED, BUT WELDED TO THE PIPE WITH A QUALIFIED SOCKET WELD (EXCEPTION TO DESIGN TABLE "A").
NEUTRON MONITORING FLOW UNIT 1 2-0260-25A
NEUTRON MONITORING FLOW UNIT 2 2-0260-26B
THIS SWITCH CAUSES SHUTDOWN COOLING SYSTEM ISOLATION VALVE CONTROL RELAYS TO ACTIVATE.
RECIRCULATING LOOP "A"
RECIRCULATING LOOP "B"
3/4" DECON TAP (TYP 10 PLACES)
VENT HEADER
DECONTAMINATION CONNECTION
DECONTAMINATION CONNECTION
T/C JUNCTION BOX
T-2A & T-2B ON MG SET A & B.
TO SAMPLE STATION
TEST
C08
Exelon.
Dresden Station 18 Mile 2
NUCLEAR SAFETY RELATED EQUIPMENT IS SHOWN ON THIS DRAWING
DIAGRAM OF NUCLEAR BOILER & REACTOR RECIRCULATING PIPING
M-26
SHEET NUMBER: 2
SIZE: F
CRITICAL CONTROL ROOM DRAWING

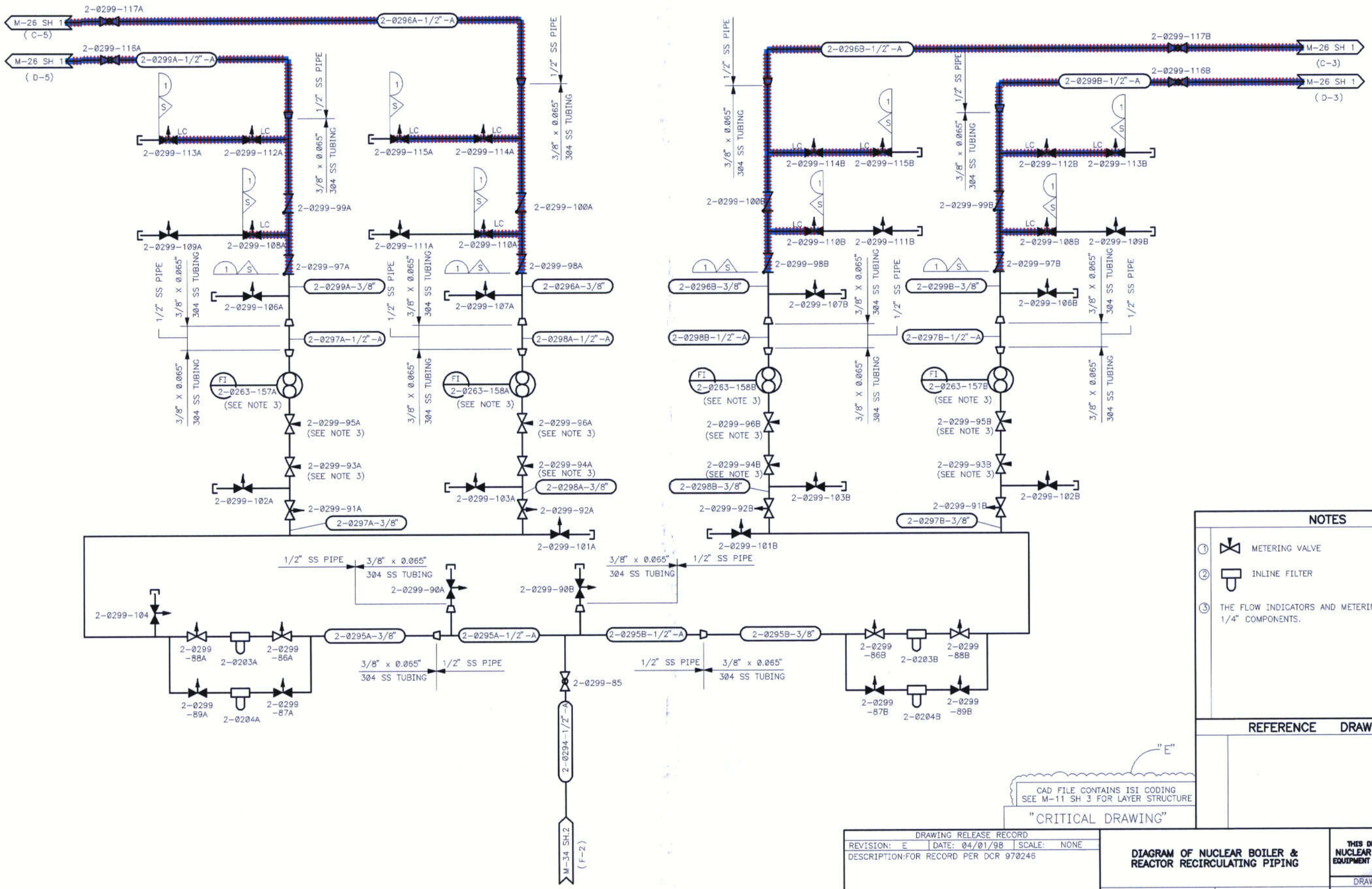

NOTES

1. METERING VALVE
2. INLINE FILTER
3. THE FLOW INDICATORS AND METERING VALVES ARE 1/4" COMPONENTS.

REFERENCE DRAWINGS

C09

"E"

CAD FILE CONTAINS ISI CODING
SEE M-11 SH 3 FOR LAYER STRUCTURE

"CRITICAL DRAWING"

DRAWING RELEASE RECORD

REVISION: E	DATE: 04/01/98	SCALE: NONE
DESCRIPTION: FOR RECORD PER DCR 970246		
PREPARED: M. PFILE	REVIEWED: H. SPRING	
APPROVED: D. LAMOND	DC: 05	SC: 0200

DIAGRAM OF NUCLEAR BOILER & REACTOR RECIRCULATING PIPING

ComEd
A Unicom Company

DRESDEN STATION 12
UNIT 2
CHICAGO, ILLINOIS

THIS DRAWING INCLUDES NUCLEAR SAFETY-RELATED EQUIPMENT AND/OR COMPONENTS

DRAWING NUMBER
M-26
SHEET 3

"CRITICAL DRAWING"

DRAWING NUMBER
M-26
SHEET 3

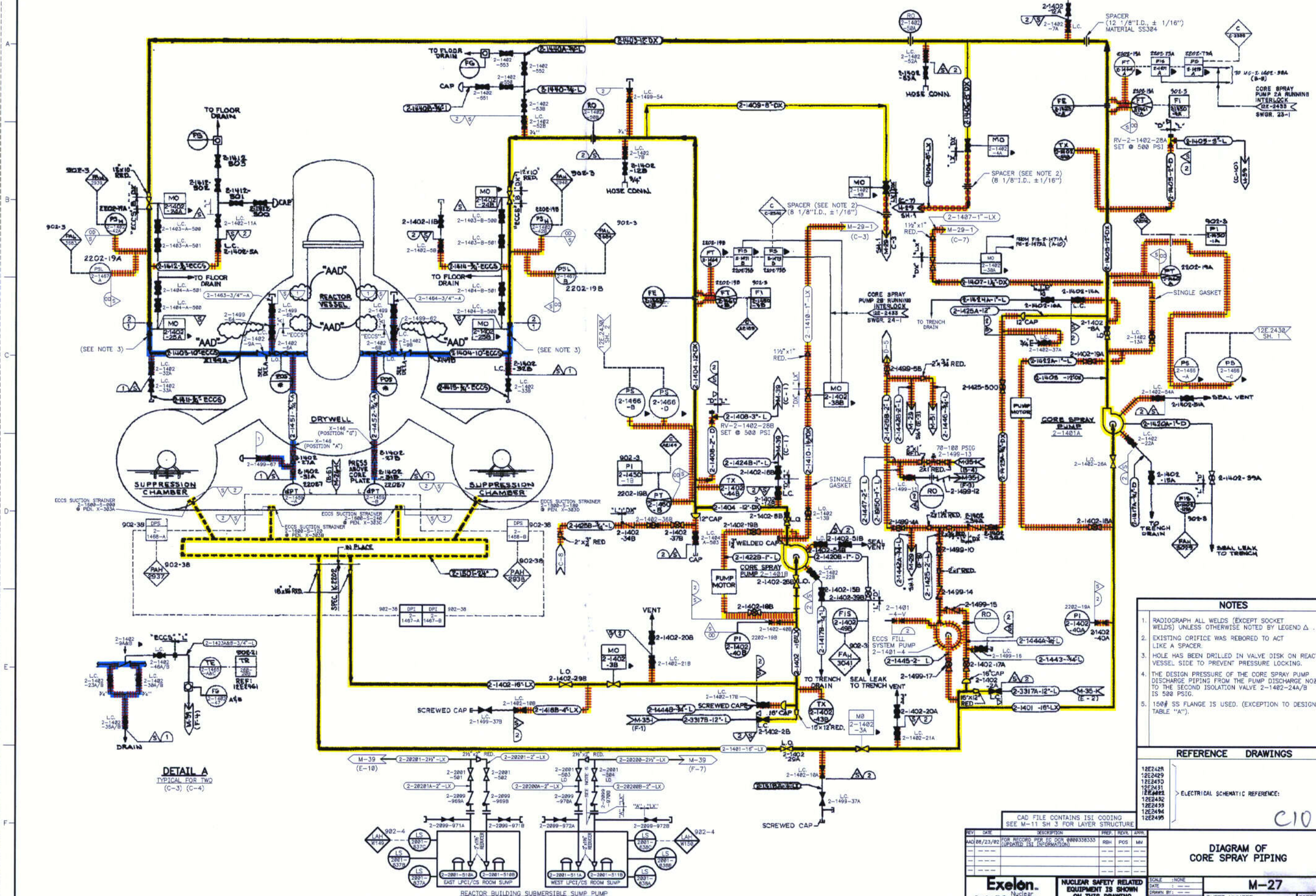

NOTES

1. RADIOGRAPH ALL WELDS (EXCEPT SOCKET WELDS) UNLESS OTHERWISE NOTED BY LEGEND △ .
2. EXISTING ORIFICE WAS REBORED TO ACT LIKE A SPACER.
3. HOLE HAS BEEN DRILLED IN VALVE DISK ON REACTOR VESSEL SIDE TO PREVENT PRESSURE LOCKING.
4. THE DESIGN PRESSURE OF THE CORE SPRAY PUMP DISCHARGE PIPING FROM THE PUMP DISCHARGE NOZZLE TO THE SECOND ISOLATION VALVE 2-1402-24A/B IS 500 PSIG.
5. 150# SS FLANGE IS USED. (EXCEPTION TO DESIGN TABLE "A").

REFERENCE DRAWINGS

12E2428
12E2429
12E2430
12E2431
12E2432
12E2433
12E2434
12E2435

> ELECTRICAL SCHEMATIC REFERENCE:

C10

CAD FILE CONTAINS ISI CODING
SEE M-11 SH 3 FOR LAYER STRUCTURE

REV	DATE	DESCRIPTION	PREP.	REVIL	APPR.
AAD	08/23/02	FOR RECORD PER EC DCN 0000338533 (UPDATED ISI INFORMATION)	RBH	POS	MM
--	-- -- --		--	--	--
--	-- -- --		--	--	--
--	-- -- --		--	--	--
--	-- -- --		--	--	--

Exelon. Nuclear
Dresden Station 2 Unit 2

NUCLEAR SAFETY RELATED EQUIPMENT IS SHOWN ON THIS DRAWING

DIAGRAM OF CORE SPRAY PIPING

SCALE : NONE
DATE : -- --
DRAWN BY : -- --
DSG. BY : CS92

M-27

SHEET NUMBER: SIZE: F

CRITICAL CONTROL ROOM DRAWING

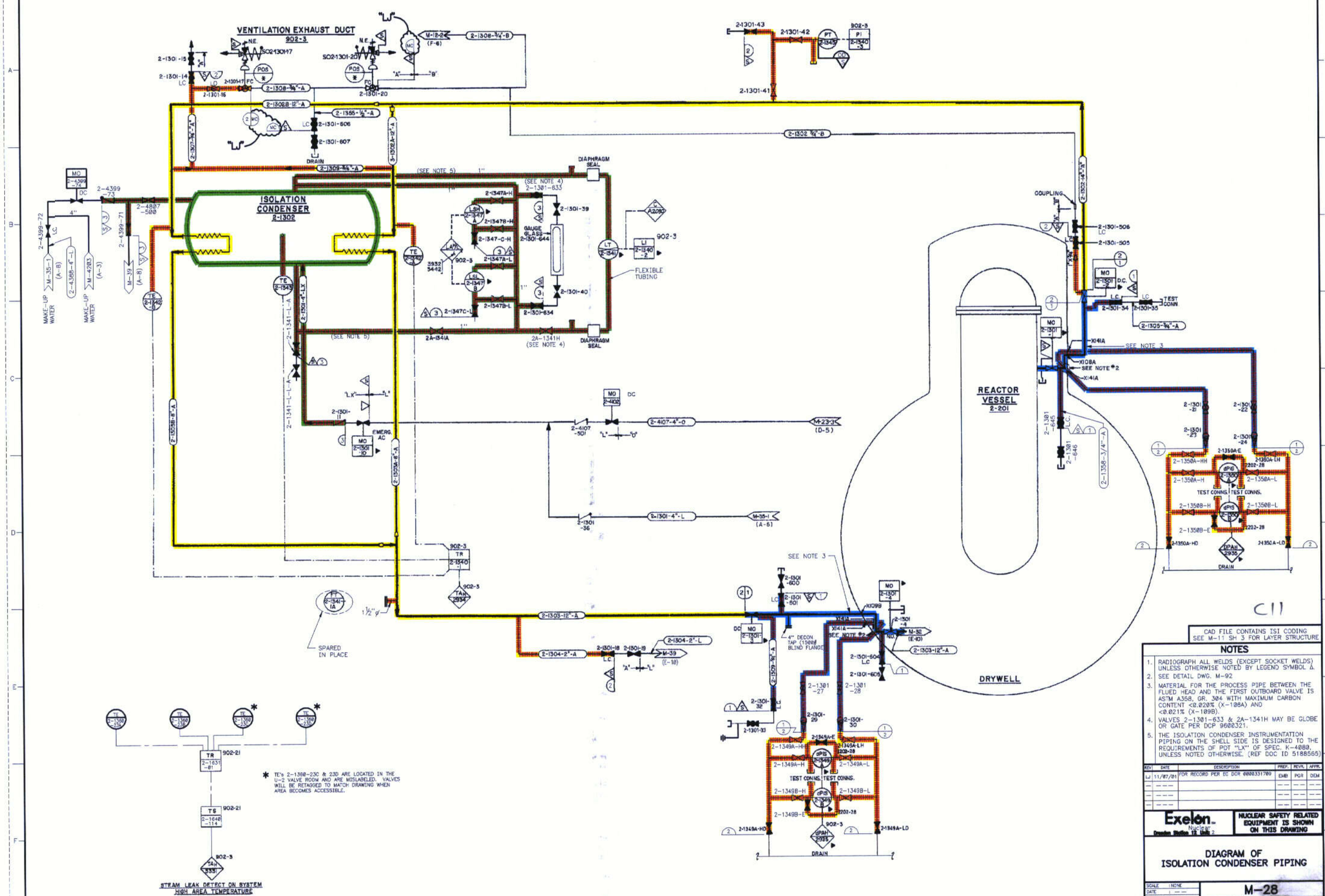

CAD FILE CONTAINS ISI CODING
SEE M-11 SH 3 FOR LAYER STRUCTURE

NOTES

1. RADIOGRAPH ALL WELDS (EXCEPT SOCKET WELDS) UNLESS OTHERWISE NOTED BY LEGEND SYMBOL Δ.
2. SEE DETAIL DWG. M-92
3. MATERIAL FOR THE PROCESS PIPE BETWEEN THE FLUED HEAD AND THE FIRST OUTBOARD VALVE IS ASTM A358, GR. 304 WITH MAXIMUM CARBON CONTENT <0.020% (X-108A) AND <0.021% (X-109B).
4. VALVES 2-1301-633 & 2A-1341H MAY BE GLOBE OR GATE PER DCP 96002321.
5. THE ISOLATION CONDENSER INSTRUMENTATION PIPING ON THE SHELL SIDE IS DESIGNED TO THE REQUIREMENTS OF PDT "LX" OF SPEC. K-4080, UNLESS NOTED OTHERWISE. (REF DOC ID 5188565)

REV	DATE	DESCRIPTION	PREP.	REVR.	APPR.
LJ	11/07/01	FOR RECORD PER EC DCR 00002331709	EMB	PGR	DEM

Exelon. Nuclear
Dresden Station 23 Units 2

NUCLEAR SAFETY RELATED EQUIPMENT IS SHOWN ON THIS DRAWING

DIAGRAM OF ISOLATION CONDENSER PIPING

SCALE: NONE
DATE: 1 - - - -
DRAWN BY: - - -
ORG. BY: CSBD

M-28

SHEET NUMBER:

SIZE: F

CRITICAL CONTROL ROOM DRAWING

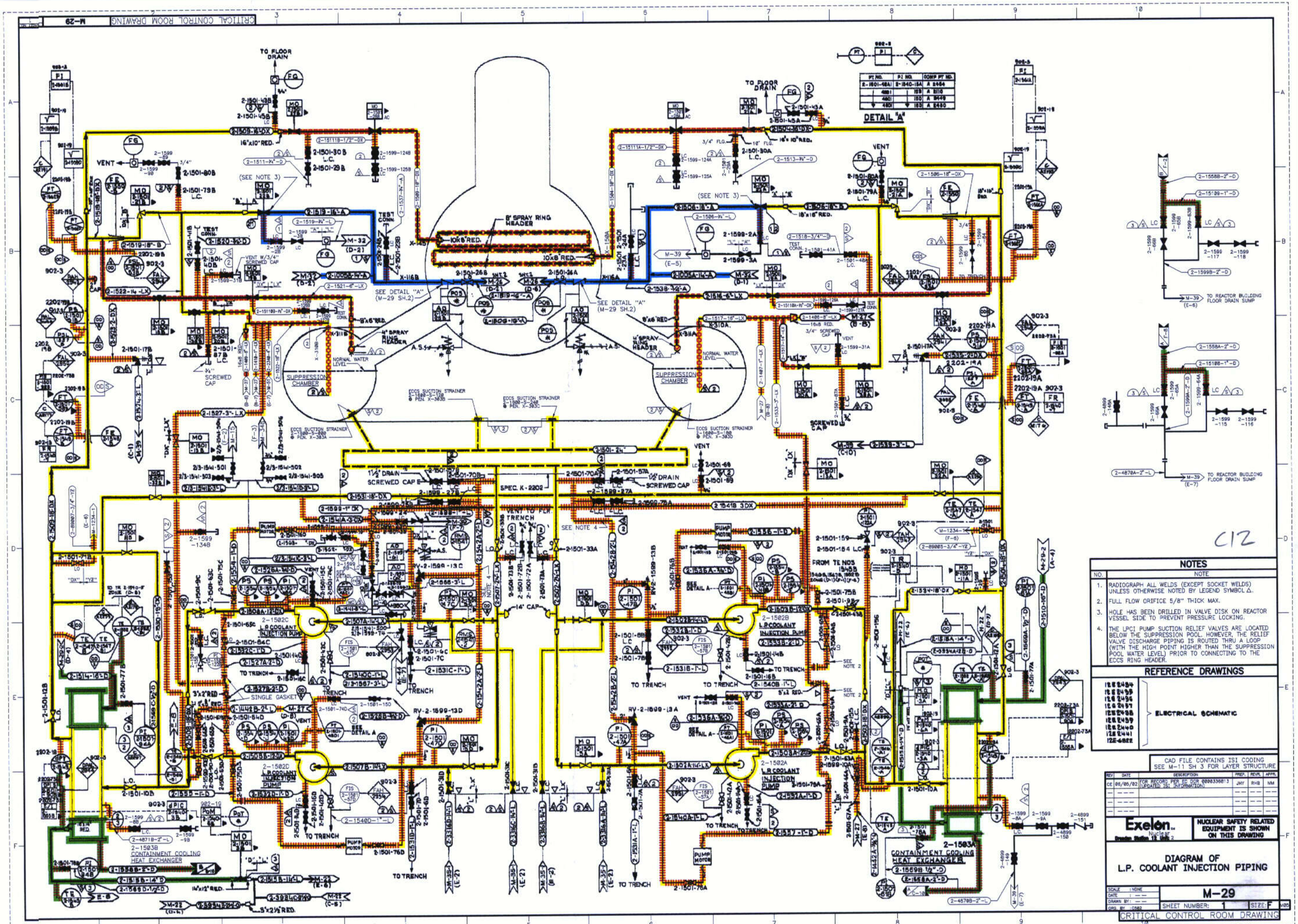

NOTES

NO.	NOTE
1.	RADIOGRAPH ALL WELDS (EXCEPT SOCKET WELDS) UNLESS OTHERWISE NOTED BY LEGEND SYMBOL △.
2.	FULL FLOW ORIFICE 5/8" THICK MAX.
3.	HOLE HAS BEEN DRILLED IN VALVE DISK ON REACTOR VESSEL SIDE TO PREVENT PRESSURE LOCKING.
4.	THE LPCI PUMP SUCTION RELIEF VALVES ARE LOCATED BELOW THE SUPPRESSION POOL HOWEVER, THE RELIEF VALVE DISCHARGE PIPING IS ROUTED THRU A LOOP (WITH THE HIGH POINT HIGHER THAN THE SUPPRESSION POOL WATER LEVEL) PRIOR TO CONNECTING TO THE ECCS RING HEADER.

REFERENCE DRAWINGS

12E2494
12E2495
12E2496
12E2497
12E2498
12E2499
12E2440
12E2441
12E-6822

ELECTRICAL SCHEMATIC

CAD FILE CONTAINS ISI CODING
SEE M-11 SH 3 FOR LAYER STRUCTURE

REV	DATE	DESCRIPTION	PREP.	REVR.	APPR.
CE	06/06/02	FOR RECORD PER EC DCR 000033681 3 (UPDATED ISI INFORMATION)	JHY	RHB	MM

Exelon. Nuclear
Dresden Station 19 Unit 2

NUCLEAR SAFETY RELATED EQUIPMENT IS SHOWN ON THIS DRAWING

DIAGRAM OF L.P. COOLANT INJECTION PIPING

SCALE: NONE
DATE: —
DRAWN BY: —
DRG. BY: CS62

M-29

SHEET NUMBER: 1 SIZE: F

CRITICAL CONTROL ROOM DRAWING

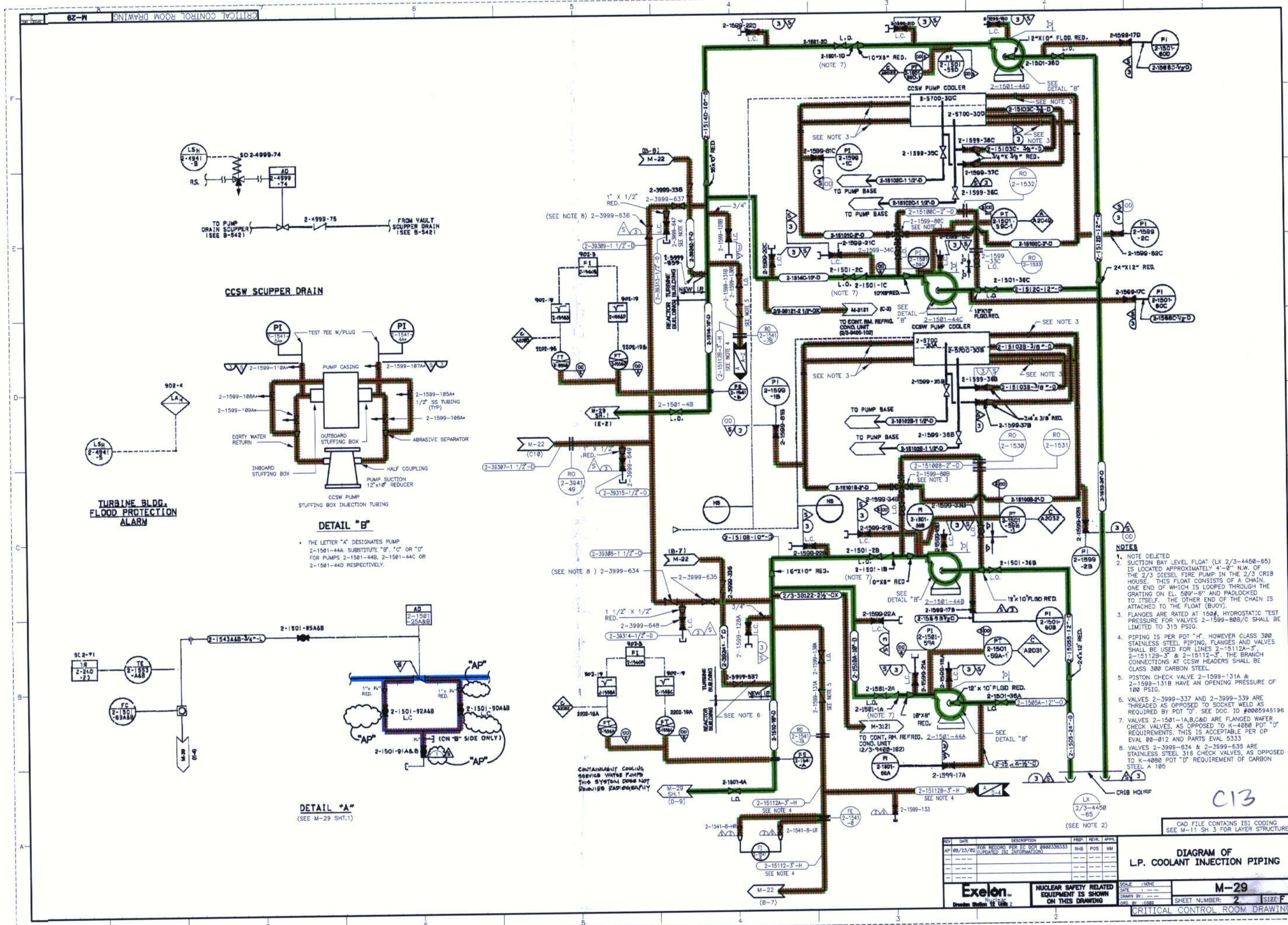
CCSW SCUPPER DRAIN
TURBINE BLDG. FLOOD PROTECTION ALARM
DETAIL "B"
* THE LETTER "A" DESIGNATES PUMP 2-1501-44A. SUBSTITUTE "B", "C" OR "D" FOR PUMPS 2-1501-44B, 2-1501-44C OR 2-1501-44D RESPECTIVELY.
DETAIL "A"
(SEE M-29 SHT.1)
CCSW PUMP COOLER
REACTOR TURBINE BUILDING
CONTAINMENT COOLING SERVICE WATER PUMPS THIS SYSTEM DOES NOT REQUIRE RADIOGRAPHY
CRIB HOUSE
NOTES
1. NOTE DELETED
2. SUCTION BAY LEVEL FLOAT (LX 2/3-4450-65) IS LOCATED APPROXIMATELY 4'-0" N.W. OF THE 2/3 DIESEL FIRE PUMP IN THE 2/3 CRIB HOUSE. THIS FLOAT CONSISTS OF A CHAIN, ONE END OF WHICH IS LOOPED THROUGH THE GRATING ON EL. 589'-6" AND PADLOCKED TO ITSELF. THE OTHER END OF THE CHAIN IS ATTACHED TO THE FLOAT (BUOY).
3. FLANGES ARE RATED AT 150#. HYDROSTATIC TEST PRESSURE FOR VALVES 2-1599-80B/C SHALL BE LIMITED TO 315 PSIG.
4. PIPING IS PER PDT "H". HOWEVER CLASS 300 STAINLESS STEEL PIPING, FLANGES AND VALVES SHALL BE USED FOR LINES 2-15112A-3", 2-15112B-3" & 2-15112-3". THE BRANCH CONNECTIONS AT CCSW HEADERS SHALL BE CLASS 300 CARBON STEEL.
5. PISTON CHECK VALVE 2-1599-131A & 2-1599-131B HAVE AN OPENING PRESSURE OF 100 PSIG.
6. VALVES 2-3999-337 AND 2-3999-339 ARE THREADED AS OPPOSED TO SOCKET WELD AS REQUIRED BY PDT "D". SEE DOC. ID #0005948196
7. VALVES 2-1501-1A,B,C&D ARE FLANGED WAFER CHECK VALVES, AS OPPOSED TO K-4080 PDT "D" REQUIREMENTS. THIS IS ACCEPTABLE PER CP EVAL 00-012 AND PARTS EVAL 5333
8. VALVES 2-3999-634 & 2-3999-638 ARE STAINLESS STEEL 316 CHECK VALVES, AS OPPOSED TO K-4080 PDT "D" REQUIREMENT OF CARBON STEEL A 105
C13
CAD FILE CONTAINS ISI CODING SEE M-11 SH 3 FOR LAYER STRUCTURE
REV DATE DESCRIPTION PREP. REVR. APPR.
AP 08/23/02 FOR RECORD PER EC DCP 0000338333 (UPDATED ISI INFORMATION) RHB POS MM
Exelon Nuclear
Dresden Station 2 Units 2
NUCLEAR SAFETY RELATED EQUIPMENT IS SHOWN ON THIS DRAWING
DIAGRAM OF L.P. COOLANT INJECTION PIPING
M-29
SHEET NUMBER: 2
SIZE: F
CRITICAL CONTROL ROOM DRAWING

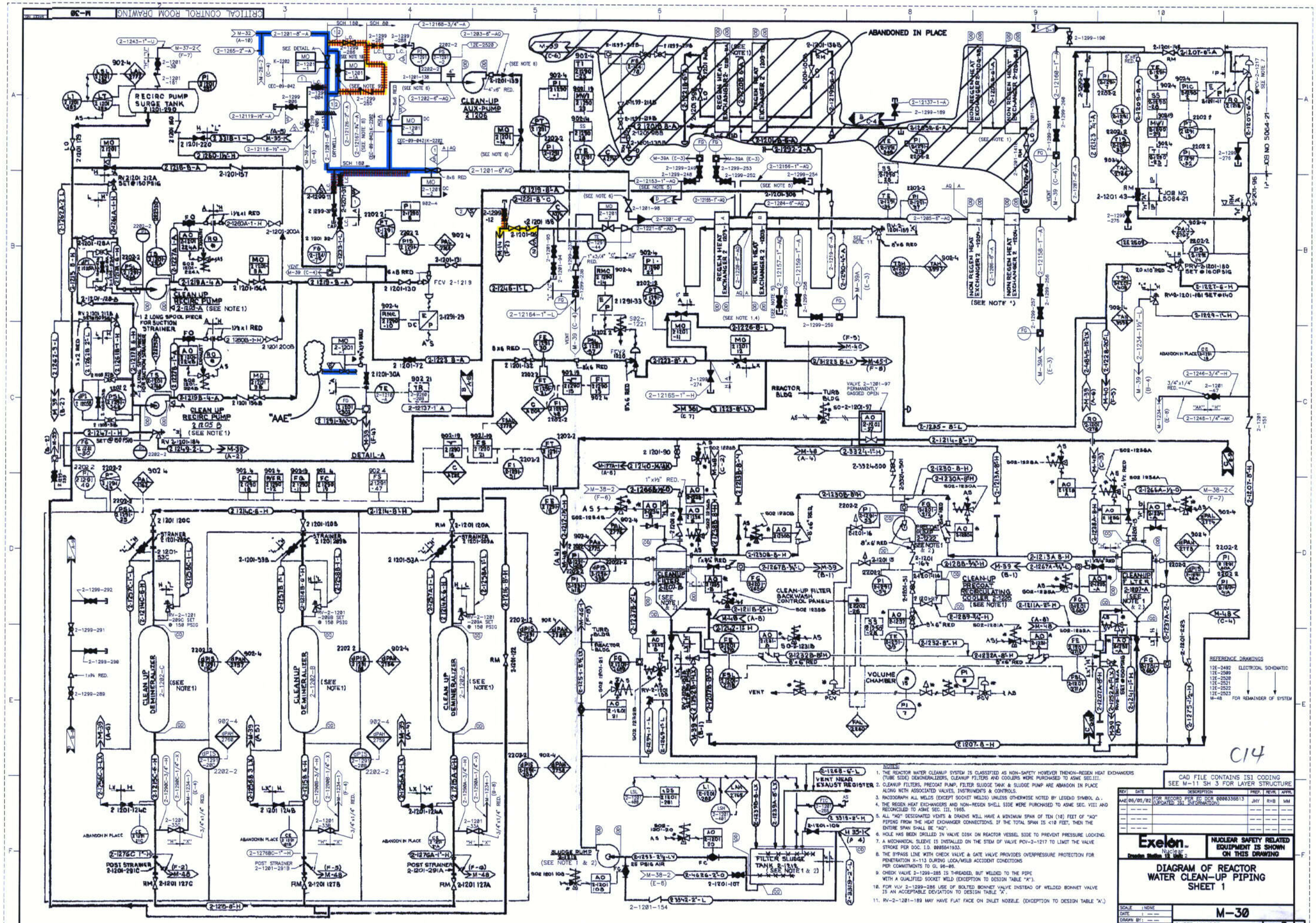
CRITICAL CONTROL ROOM DRAWING
M-30
ABANDONED IN PLACE
RECIRC PUMP SURGE TANK 2-1201-290
CLEAN-UP AUX-PUMP 2-1206
CLEAN UP RECIRC PUMP 2-1205-A (SEE NOTE 1)
CLEAN UP RECIRC PUMP 2-1205-B (SEE NOTE 1)
"AAE"
DETAIL-A
REGEN HEAT EXCHANGER 2-1205-A
REGEN HEAT EXCHANGER 2-1205-B
NON REGEN HEAT EXCHANGER 2-1204-A
NON REGEN HEAT EXCHANGER 2-1204-B
(SEE NOTE 1)
REACTOR BLDG
TURB BLDG
VALVE 2-1201-97 PERMANENTLY GAGGED OPEN
CLEANUP DEMINERALIZER 2-1202-C (SEE NOTE 1)
CLEANUP DEMINERALIZER 2-1202-B (SEE NOTE 1)
CLEAN UP DEMINERALIZER 2-1202-A (SEE NOTE 1)
CLEANUP FILTER 2-1207-B (SEE NOTE 1 & 2)
CLEANUP FILTER 2-1207-A (SEE NOTE 1 & 2)
CLEAN-UP FILTER BACKWASH CONTROL PANEL
CLEAN-UP PRECOAT RECIRCULATING COOLER 2-1222 (SEE NOTE 1)
VOLUME CHAMBER
FILTER SLUDGE TANK 2-1219 (SEE NOTE 1 & 2)
SLUDGE PUMP 2-1218 (SEE NOTE 1 & 2)
VENT NEAR EXHAUST REGISTER
POST STRAINER 2-1201-291C
POST STRAINER 2-1201-291B
POST STRAINER 2-1201-291A
ABANDON IN PLACE
REFERENCE DRAWINGS
12E-2492 ELECTRICAL SCHEMATIC
12E-2509
12E-2520
12E-2521
12E-2522
12E-2523
M-48 FOR REMAINDER OF SYSTEM
C14
NOTES:
1. THE REACTOR WATER CLEANUP SYSTEM IS CLASSIFIED AS NON-SAFETY HOWEVER THENON-REGEN HEAT EXCHANGERS (TUBE SIDE) DEMINERALIZERS, CLEANUP FILTERS AND COOLERS WERE PURCHASED TO ASME SEC.III.
2. CLEANUP FILTERS, PRECOAT PUMP, FILTER SLUDGE TANK & SLUDGE PUMP ARE ABANDON IN PLACE ALONG WITH ASSOCIATED VALVES, INSTRUMENTS & CONTROLS.
3. RADIOGRAPH ALL WELDS (EXCEPT SOCKET WELDS) UNLESS OTHERWISE NOTED BY LEGEND SYMBOL △.
4. THE REGEN HEAT EXCHANGERS AND NON-REGEN SHELL SIDE WERE PURCHASED TO ASME SEC. VIII AND RECONCILED TO ASME SEC. III, 1965.
5. ALL "AQ" DESIGNATED VENTS & DRAINS WILL HAVE A MINIMUM SPAN OF TEN (10) FEET OF "AQ" PIPING FROM THE HEAT EXCHANGER CONNECTIONS. IF THE TOTAL SPAN IS <10 FEET, THEN THE ENTIRE SPAN SHALL BE "AQ".
6. HOLE HAS BEEN DRILLED IN VALVE DISK ON REACTOR VESSEL SIDE TO PREVENT PRESSURE LOCKING.
7. A MECHANICAL SLEEVE IS INSTALLED ON THE STEM OF VALVE PCV-2-1217 TO LIMIT THE VALVE STROKE PER DOC. I.D. 0005541933.
8. THE BYPASS LINE WITH CHECK VALVE & GATE VALVE PROVIDES OVERPRESSURE PROTECTION FOR PENETRATION X-113 DURING LOCA/MSLB ACCIDENT CONDITIONS PER COMMITMENTS TO GL 96-06.
9. CHECK VALVE 2-1299-285 IS THREADED, BUT WELDED TO THE PIPE WITH A QUALIFIED SOCKET WELD (EXCEPTION TO DESIGN TABLE "A").
10. FOR VLV 2-1299-286 USE OF BOLTED BONNET VALVE INSTEAD OF WELDED BONNET VALVE IS AN ACCEPTABLE DEVIATION TO DESIGN TABLE "A".
11. RV-2-1281-189 MAY HAVE FLAT FACE ON INLET NOZZLE (EXCEPTION TO DESIGN TABLE "A".)
CAD FILE CONTAINS ISI CODING
SEE M-11 SH 3 FOR LAYER STRUCTURE
REV DATE DESCRIPTION PREP. REVR. APPR.
AAE 06/05/02 FOR RECORD PER EC DCR 0000336813 (UPDATED ISI INFORMATION) JHY RHB MM
Exelon. Nuclear
Dresden Station 19 Units 2
NUCLEAR SAFETY RELATED EQUIPMENT IS SHOWN ON THIS DRAWING
DIAGRAM OF REACTOR WATER CLEAN-UP PIPING SHEET 1
SCALE NONE
DATE
DRAWN BY
ORG. ID CGBD
SHEET NUMBER: M-30
SIZE: F
CRITICAL CONTROL ROOM DRAWING

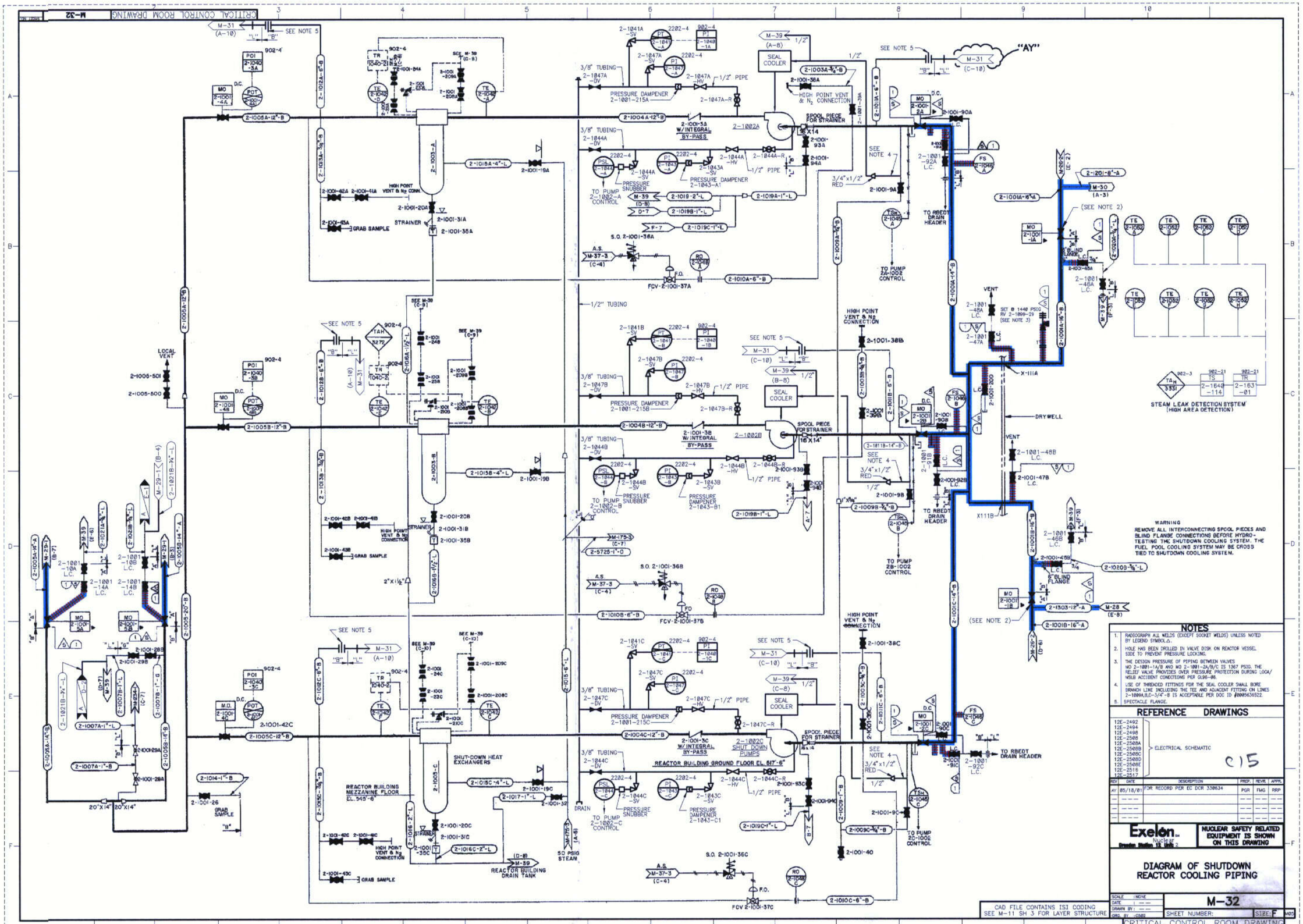
"AY"
SEE NOTE 5
SEE NOTE 4
SEE NOTE 2
SEAL COOLER
SPOOL PIECE FOR STRAINER
PRESSURE DAMPENER
PRESSURE SNUBBER
HIGH POINT VENT & N2 CONNECTION
TO PUMP 2A-1002 CONTROL
TO PUMP 2B-1002 CONTROL
TO PUMP 2C-1002 CONTROL
TO RBEDT DRAIN HEADER
DRYWELL
STEAM LEAK DETECTION SYSTEM (HIGH AREA DETECTION)
REACTOR BUILDING GROUND FLOOR EL. 517'-6"
REACTOR BUILDING MEZZANINE FLOOR EL. 545'-6"
SHUT-DOWN HEAT EXCHANGERS
REACTOR BUILDING DRAIN TANK
50 PSIG STEAM
GRAB SAMPLE
STRAINER
LOCAL VENT
WARNING
REMOVE ALL INTERCONNECTING SPOOL PIECES AND BLIND FLANGE CONNECTIONS BEFORE HYDRO-TESTING THE SHUTDOWN COOLING SYSTEM. THE FUEL POOL COOLING SYSTEM MAY BE CROSS TIED TO SHUTDOWN COOLING SYSTEM.
NOTES
1. RADIOGRAPH ALL WELDS (EXCEPT SOCKET WELDS) UNLESS NOTED BY LEGEND SYMBOL.G.
2. HOLE HAS BEEN DRILLED IN VALVE DISK ON REACTOR VESSEL SIDE TO PREVENT PRESSURE LOCKING.
3. THE DESIGN PRESSURE OF PIPING BETWEEN VALVES MO 2-1001-1A/B AND MO 2-1001-2A/B/C IS 1367 PSIG. THE RELIEF VALVE PROVIDES OVER PRESSURE PROTECTION DURING LOCA/MSLB ACCIDENT CONDITIONS PER CL96-06.
4. USE OF THREADED FITTINGS FOR THE SEAL COOLER SMALL BORE BRANCH LINE INCLUDING THE TEE AND ADJACENT FITTING ON LINES 2-1004A,B,C-3/4"-B IS ACCEPTABLE PER DOC ID #00056362Z.
5. SPECTACLE FLANGE.
REFERENCE DRAWINGS
12E-2492
12E-2494
12E-2498
12E-2508
12E-2508A
12E-2508B
12E-2508C
12E-2508D
12E-2508E
12E-2516
12E-2517
ELECTRICAL SCHEMATIC
C15
REV DATE DESCRIPTION PREP. REVR. APPR.
AY 05/18/81 FOR RECORD PER EC DCR 330634 PGR FMG RRP
Exelon Nuclear
Dresden Station, IS Units 2
NUCLEAR SAFETY RELATED EQUIPMENT IS SHOWN ON THIS DRAWING
DIAGRAM OF SHUTDOWN REACTOR COOLING PIPING
SCALE : NONE
DATE : --/--/--
DRAWN BY : --
ORG. BY : CSRD
M-32
SHEET NUMBER:
SIZE: F
CAD FILE CONTAINS ISI CODING SEE M-11 SH 3 FOR LAYER STRUCTURE
CRITICAL CONTROL ROOM DRAWING

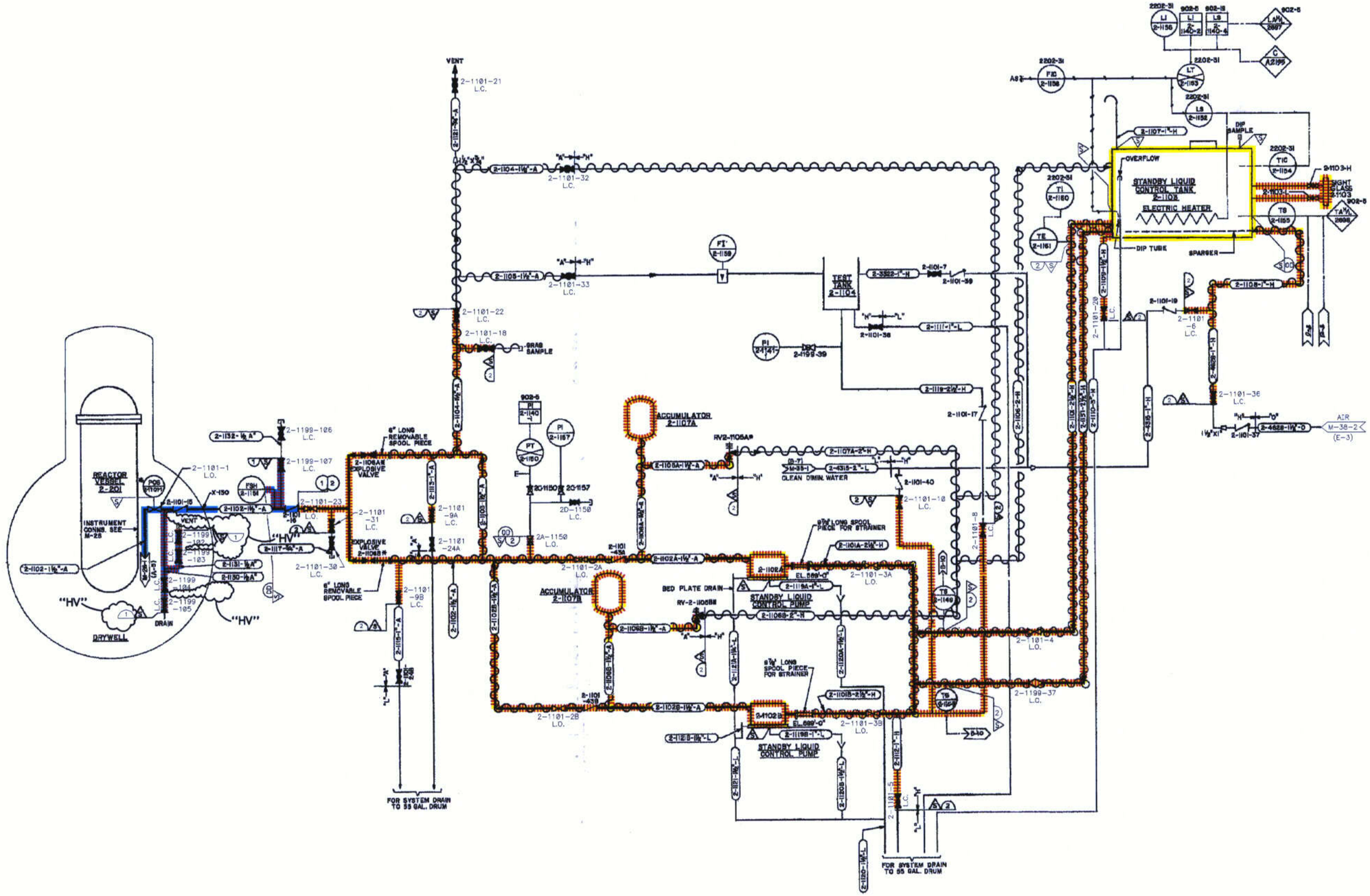

C16

REV	DATE	DESCRIPTION	PREP.	REVIL	APPR.
H/	08/23/02	FOR RECORD PER EC DCR 2000338333 (UPDATED ISI INFORMATION)	RHB	POS	MM
—	— — —		— —	— —	— —
—	— — —		— —	— —	— —
—	— — —		— —	— —	— —
—	— — —		— —	— —	— —

CAD FILE CONTAINS ISI CODING SEE M-11 SH 3 FOR LAYER STRUCTURE

Exelon. Nuclear
Dresden Station 2 Unit 2

NUCLEAR SAFETY RELATED EQUIPMENT IS SHOWN ON THIS DRAWING

DIAGRAM OF STANDBY LIQUID CONTROL PIPING

SCALE: NONE
DATE: — —
DRAWN BY: — —
ORG. BY: IC5BG

M-33

SHEET NUMBER: SIZE: F

CRITICAL CONTROL ROOM DRAWING

LEGEND

- DIAPHRAGM OPERATED WITH MANUAL OVERRIDE
- CHECK VALVE WITH ORIFICE
- SOLENOID OPERATED WITH BUILT-IN FLOW CONTROL
- SCREWED CAP FOR N_2 CHARGING
- 3-WAY SOLENOID VALVE CLOSED PORT IN OPPOSITE MODE
- (A) SCRAM FUNCTION
- (B) ROD BLOCK FUNCTION

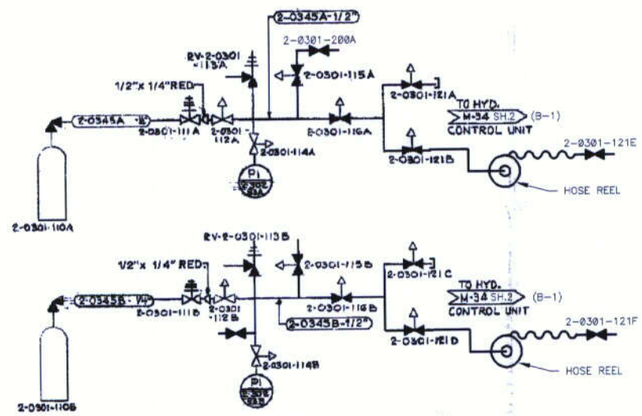

ACCUMULATOR NITROGEN CHARGING SYSTEM *

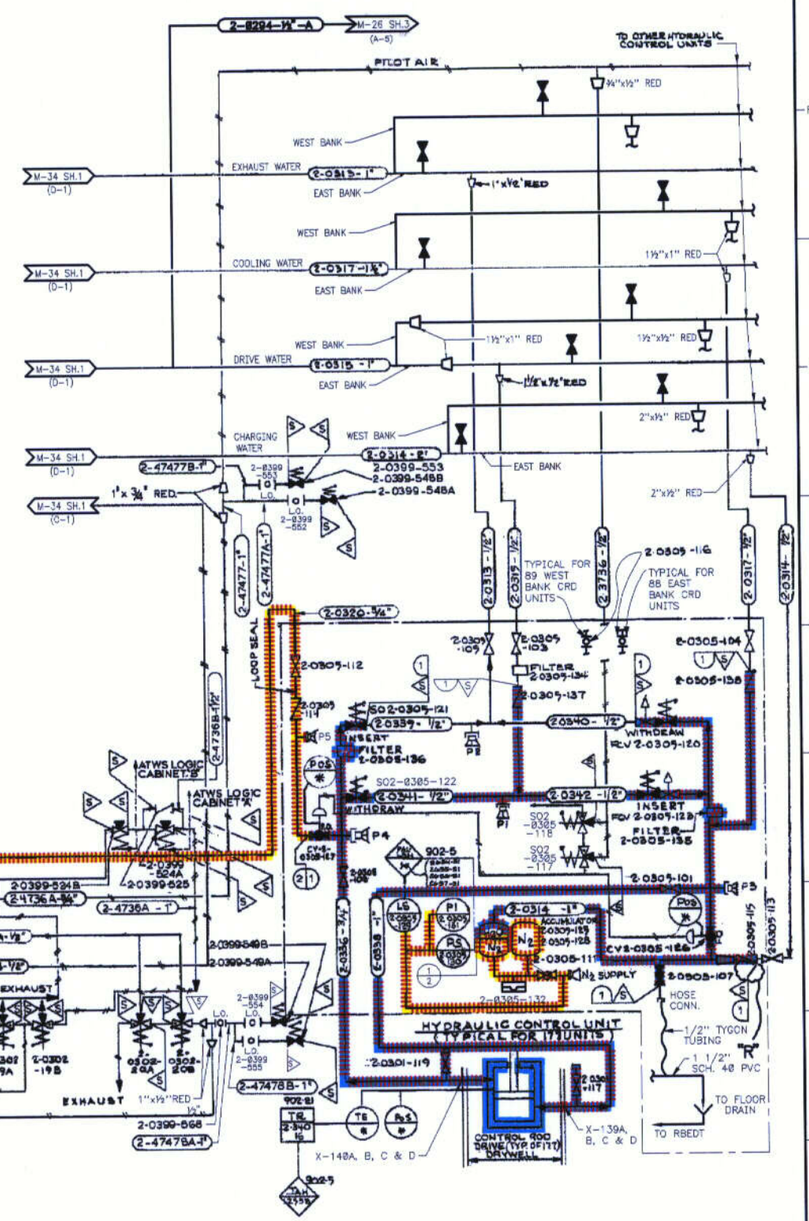

NOTE!

1. RADIOGRAPH ALL WELDS(EXCEPT SOCKET WELDS) UNLESS OTHERWISE NOTED BY LEGEND SYMBOL △
2. FOR NOTES AND REFERENCE DRAWINGS SEE DWG. M-34 SH.1
3. ALL IV INSTRUMENTATION LINES SLOPE SUCH THAT DRAINAGE IS ASSURED INTO THE IV.
4. FOR PDT REFER TO EDS SPEC .0590-008-S-09 & DWG. SERIES M-3020 THRU M-3023
5. BLIND FLANGE WITH ¾" THREADED PLUG FOR HYDROLAZING

C17

REV	DATE	DESCRIPTION	PREP.	REVR.	APPR.
R	08/23/02	FOR RECORD PER EC DCR 0000338333 (UPDATED ISI INFORMATION)	RHB	POS	MM

Exelon. Dresden Station Units 2 & 3

NUCLEAR SAFETY RELATED EQUIPMENT IS SHOWN ON THIS DRAWING

DIAGRAM OF CONTROL ROD DRIVE HYDRAULIC PIPING

CAD FILE CONTAINS ISI CODING SEE M-11 SH 3 FOR LAYER STRUCTURE

SCALE: NONE
DATE: — —
DRAWN BY: — —
ORG. BY: 10582

M-34
SHEET NUMBER: 2
SIZE: F

CRITICAL CONTROL ROOM DRAWING

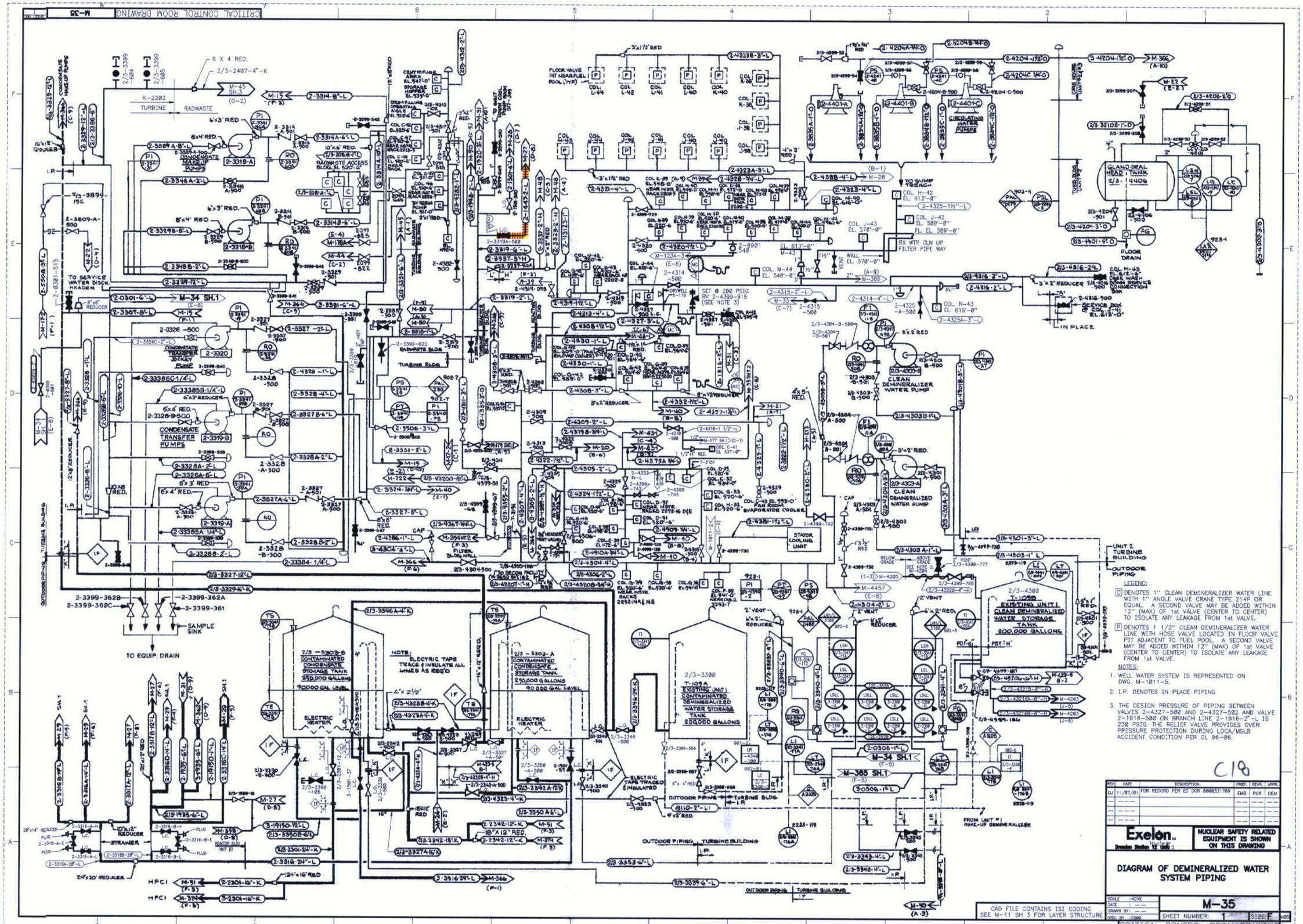
CRITICAL CONTROL ROOM DRAWING
M-35
CONDENSATE MAKE-UP PUMPS
CONDENSATE TRANSFER JOCKEY PUMP
CONDENSATE TRANSFER PUMPS
TO SERVICE WATER DISCH. HEADER
TURBINE
RADWASTE
RADWASTE ACCESS BLDG. EL 500'-0"
TURBINE BLDG.
RADWASTE BLDG.
FLOOR VALVE PIT NEAR FUEL POOL (TYP)
CIRCULATING WATER PUMPS
TO SUMP TREATMENT
RX WTR CLN UP FILTER PIPE WAY
GLAND SEAL HEAD TANK 2/3-4406
FLOOR DRAIN
CLEAN DEMINERALIZER WATER PUMP
STATOR COOLING UNIT
2/3-3303-B CONTAMINATED CONDENSATE STORAGE TANK 250,000 GALLONS
2/3-3303-A CONTAMINATED CONDENSATE STORAGE TANK 250,000 GALLONS
NOTE: ELECTRIC TAPE TRACE & INSULATE ALL LINES AS REQ'D
ELECTRIC HEATER
2/3-3300 T-109A EXISTING UNIT 1 CONTAMINATED DEMINERALIZED WATER STORAGE TANK 250,000 GALLONS
2/3-4308 T-109B EXISTING UNIT 1 CLEAN DEMINERALIZED WATER STORAGE TANK 200,000 GALLONS
SAMPLE SINK
TO EQUIP. DRAIN
OUTDOOR PIPING TURBINE BUILDING
UNIT 2 TURBINE BUILDING
OUTDOOR PIPING
FROM UNIT #1 MAKE-UP DEMINERALIZER
HPCI
STRAINER
LEGEND:
C DENOTES 1" CLEAN DEMINERALIZER WATER LINE WITH 1" ANGLE VALVE CRANE TYPE 214P OR EQUAL. A SECOND VALVE MAY BE ADDED WITHIN 12" (MAX) OF 1st VALVE (CENTER TO CENTER) TO ISOLATE ANY LEAKAGE FROM 1st VALVE.
P DENOTES 1 1/2" CLEAN DEMINERALIZER WATER LINE WITH HOSE VALVE LOCATED IN FLOOR VALVE PIT ADJACENT TO FUEL POOL. A SECOND VALVE MAY BE ADDED WITHIN 12" (MAX) OF 1st VALVE (CENTER TO CENTER) TO ISOLATE ANY LEAKAGE FROM 1st VALVE.
NOTES:
1. WELL WATER SYSTEM IS REPRESENTED ON DWG. M-1811-5.
2. I.P. DENOTES IN PLACE PIPING
3. THE DESIGN PRESSURE OF PIPING BETWEEN VALVES 2-4327-500 AND 2-4327-502 AND VALVE 2-1916-500 ON BRANCH LINE 2-1916-2"-L IS 230 PSIG. THE RELIEF VALVE PROVIDES OVER PRESSURE PROTECTION DURING LOCA/MSLB ACCIDENT CONDITION PER GL 96-06.
C18
REV DATE DESCRIPTION PREP. REVIL APPR.
DJ 11/07/01 FOR RECORD PER EC DCR 0000331709 EMB PGR DEM
Exelon. Dresden Station Units 2 & 3
NUCLEAR SAFETY RELATED EQUIPMENT IS SHOWN ON THIS DRAWING
DIAGRAM OF DEMINERALIZED WATER SYSTEM PIPING
SCALE : NONE
DATE : ---
DRAWN BY : ---
DES. BY : CSDD
M-35
SHEET NUMBER: 1 SIZE: F
CAD FILE CONTAINS ISI CODING SEE M-11 SH 3 FOR LAYER STRUCTURE
CRITICAL CONTROL ROOM DRAWING

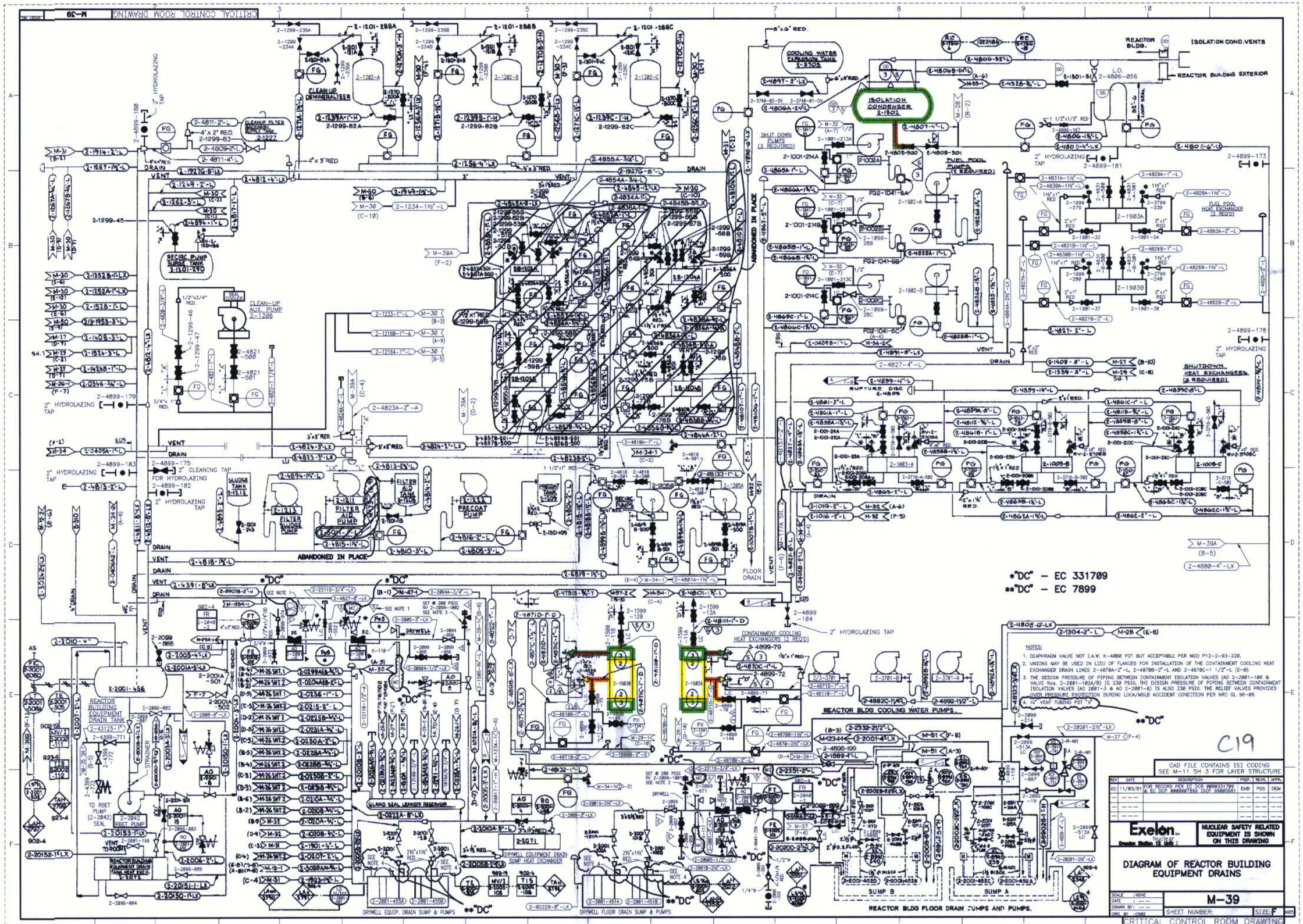
CRITICAL CONTROL ROOM DRAWING
M-39
CLEAN-UP DEMINERALIZER
2-1282-A
2-1282-B
2-1282-C
COOLING WATER EXPANSION TANK 2-1705
ISOLATION CONDENSER 2-1302
REACTOR BLDG.
ISOLATION COND. VENTS
REACTOR BUILDING EXTERIOR
SHUT DOWN PUMPS (1 REQUIRED)
FUEL POOL PUMPS (1 REQUIRED)
FUEL POOL HEAT EXCHANGER (2 REQ'D)
SHUTDOWN HEAT EXCHANGERS (2 REQUIRED)
RECIRC. PUMP SURGE TANK 2-1301-1240
CLEAN-UP AUX. PUMP 2-1206
CLEANUP FILTER BACKWASH RECEIVING TANK 2-1227
SLUDGE TANK 2-1212
FILTER AID TANK 2-1205
FILTER AIR PUMP
FILTER SLUDGE PUMP
PRECOAT TANK 2-1209
PRECOAT PUMP
RECIRC. PUMPS
ABANDONED IN PLACE
REACTOR BUILDING EQUIPMENT DRAIN TANK 2-2001-456
REACTOR BUILDING EQUIPMENT DRAIN TANK HEAT EXCH. 2-1213
RBET PUMP (2-2042)
GLAND SEAL LEAKOFF RESERVOIR
DRYWELL EQUIPMENT DRAIN SUMP HEAT EXCHANGER
DRYWELL EQUIP. DRAIN SUMP & PUMPS
DRYWELL FLOOR DRAIN SUMP & PUMPS
CONTAINMENT COOLING HEAT EXCHANGERS (2 REQ'D)
REACTOR BLDG COOLING WATER PUMPS
REACTOR BLDG FLOOR DRAIN SUMPS AND PUMPS
SUMP B
SUMP A
*"DC" – EC 331709
**"DC" – EC 7899
NOTES:
1. DIAPHRAGM VALVE NOT I.A.W. K-4080 PDT BUT ACCEPTABLE PER NOO P12-2-93-220.
2. UNIONS MAY BE USED IN LIEU OF FLANGES FOR INSTALLATION OF THE CONTAINMENT COOLING HEAT EXCHANGER DRAIN LINES 2-4870A-2"-L, 2-4870B-2"-L AND 2-4870C-1 1/2"-L (E-8).
3. THE DESIGN PRESSURE OF PIPING BETWEEN CONTAINMENT ISOLATION VALVES (AO 2-2001-186 & VALVE Nos. 2-2001-102A/B) IS 230 PSIG. THE DESIGN PRESSURE OF PIPING BETWEEN CONTAINMENT ISOLATION VALVES (AO 2001-3 & AO 2-2001-6) IS ALSO 230 PSIG. THE RELIEF VALVES PROVIDES OVER PRESSURE PROTECTION DURING LOCA/MSLB ACCIDENT CONDITION PER NRC GL 96-06.
4. 1/4" VENT TUBING PDT "X"
C19
CAD FILE CONTAINS ISI CODING SEE M-11 SH 3 FOR LAYER STRUCTURE
REV DATE DESCRIPTION PREP. REVR. APPR.
DC 11/03/01 FOR RECORD PER EC DCR 000331709 & EC DCP 000000007899 (DCP 99000068) EMB POS DEM
Exelon. Nuclear
Braidwood Station Unit 2
NUCLEAR SAFETY RELATED EQUIPMENT IS SHOWN ON THIS DRAWING
DIAGRAM OF REACTOR BUILDING EQUIPMENT DRAINS
SCALE : NONE
DATE : ---
DRAWN BY : ---
ORG. BY : CSRD
M-39
SHEET NUMBER:
SIZE: F
CRITICAL CONTROL ROOM DRAWING

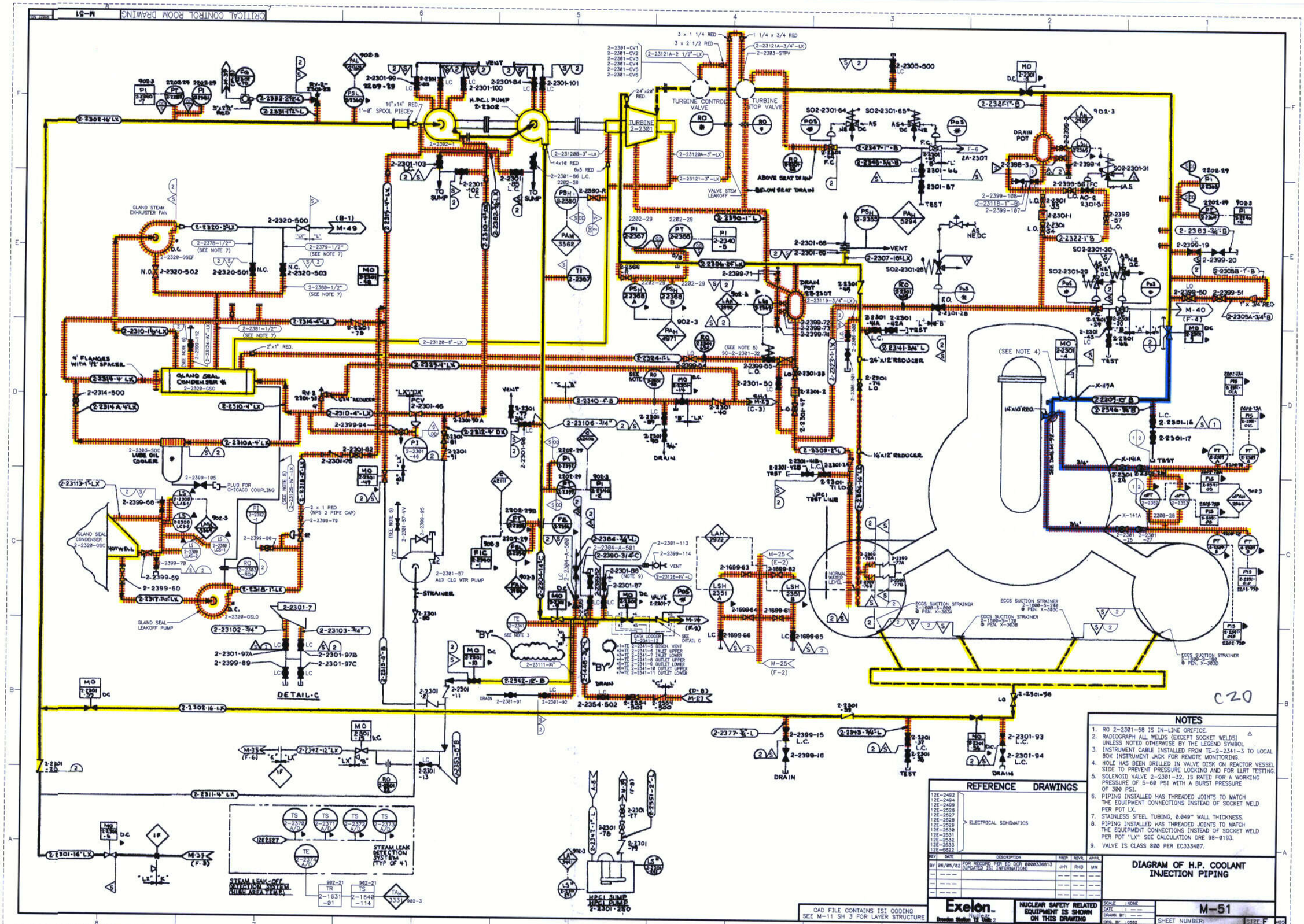

NOTES

1. RO 2-2301-58 IS IN-LINE ORIFICE.
2. RADIOGRAPH ALL WELDS (EXCEPT SOCKET WELDS) UNLESS NOTED OTHERWISE BY THE LEGEND SYMBOL △
3. INSTRUMENT CABLE INSTALLED FROM TE-2-2341-3 TO LOCAL BOX INSTRUMENT JACK FOR REMOTE MONITORING.
4. HOLE HAS BEEN DRILLED IN VALVE DISK ON REACTOR VESSEL SIDE TO PREVENT PRESSURE LOCKING AND FOR LLRT TESTING.
5. SOLENOID VALVE 2-2301-32, IS RATED FOR A WORKING PRESSURE OF 5-60 PSI WITH A BURST PRESSURE OF 300 PSI.
6. PIPING INSTALLED HAS THREADED JOINTS TO MATCH THE EQUIPMENT CONNECTIONS INSTEAD OF SOCKET WELD PER PDT LX.
7. STAINLESS STEEL TUBING, 0.049" WALL THICKNESS.
8. PIPING INSTALLED HAS THREADED JOINTS TO MATCH THE EQUIPMENT CONNECTIONS INSTEAD OF SOCKET WELD PER PDT "LX" SEE CALCULATION DRE 98-0193.
9. VALVE IS CLASS 800 PER EC333487.

REFERENCE DRAWINGS

12E-2492, 12E-2494, 12E-2499, 12E-2526, 12E-2527, 12E-2528, 12E-2529, 12E-2530, 12E-2531, 12E-2532, 12E-2533, 12E-6822 — ELECTRICAL SCHEMATICS

REV.	DATE	DESCRIPTION	PREP.	REVR.	APPR.
BY	06/05/82	FOR RECORD PER EC DCR R0003336813 (UPDATED ISI INFORMATION)	JHY	RHB	MM

CAD FILE CONTAINS ISI CODING
SEE M-11 SH 3 FOR LAYER STRUCTURE

Exelon. NUCLEAR
Dresden Station 19 Units 2

NUCLEAR SAFETY RELATED EQUIPMENT IS SHOWN ON THIS DRAWING

DIAGRAM OF H.P. COOLANT INJECTION PIPING

SCALE : NONE
DATE : — —
DRAWN BY : — —
ORG. BY : CSBZ

M-51

SHEET NUMBER: SIZE: F

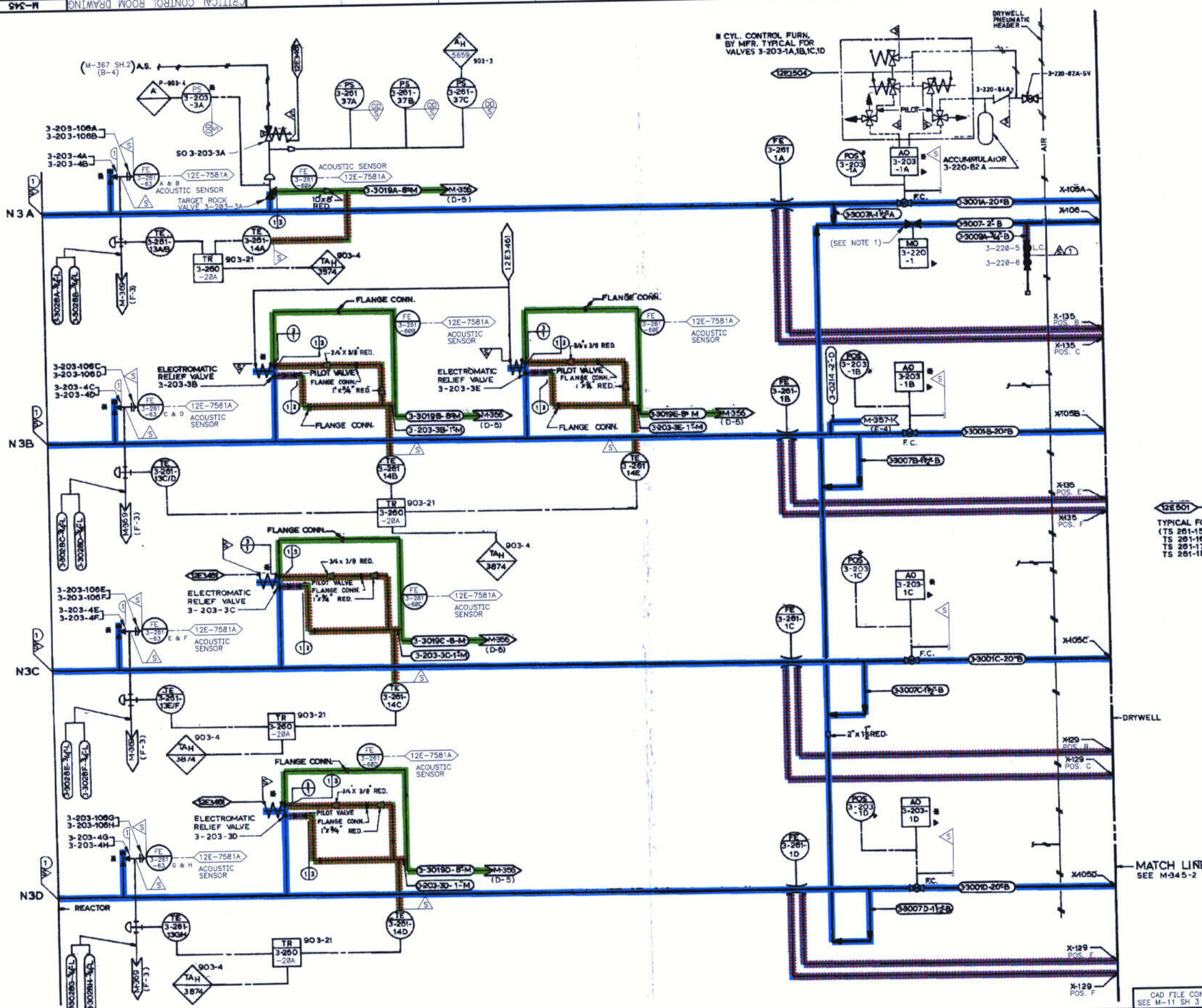

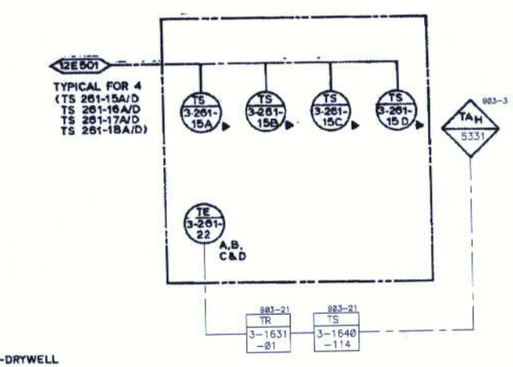

STEAM LEAK DETECTION SYSTEM

C21

NOTES

1. HOLE HAS BEEN DRILLED IN VALVE DISK ON REACTOR VESSEL SIDE TO PREVENT PRESSURE LOCKING.

CAD FILE CONTAINS ISI CODING SEE M-11 SH 3 FOR LAYER STRUCTURE

REV	DATE	DESCRIPTION	PREP.	REVR.	APPR.
AV	08/23/82	FOR RECORD PER EC DCR 00003383 33 (UPDATED ISI INFORMATION)	RHB	POS	MM

Exelon. Nuclear Dresden Station Unit 3

NUCLEAR SAFETY RELATED EQUIPMENT IS SHOWN ON THIS DRAWING

DIAGRAM OF MAIN STEAM PIPING

SCALE: NONE
DATE: — —
DRAWN BY: — —
ORG. BY: CS82

M-345

SHEET NUMBER: 1 SIZE: F

CRITICAL CONTROL ROOM DRAWING

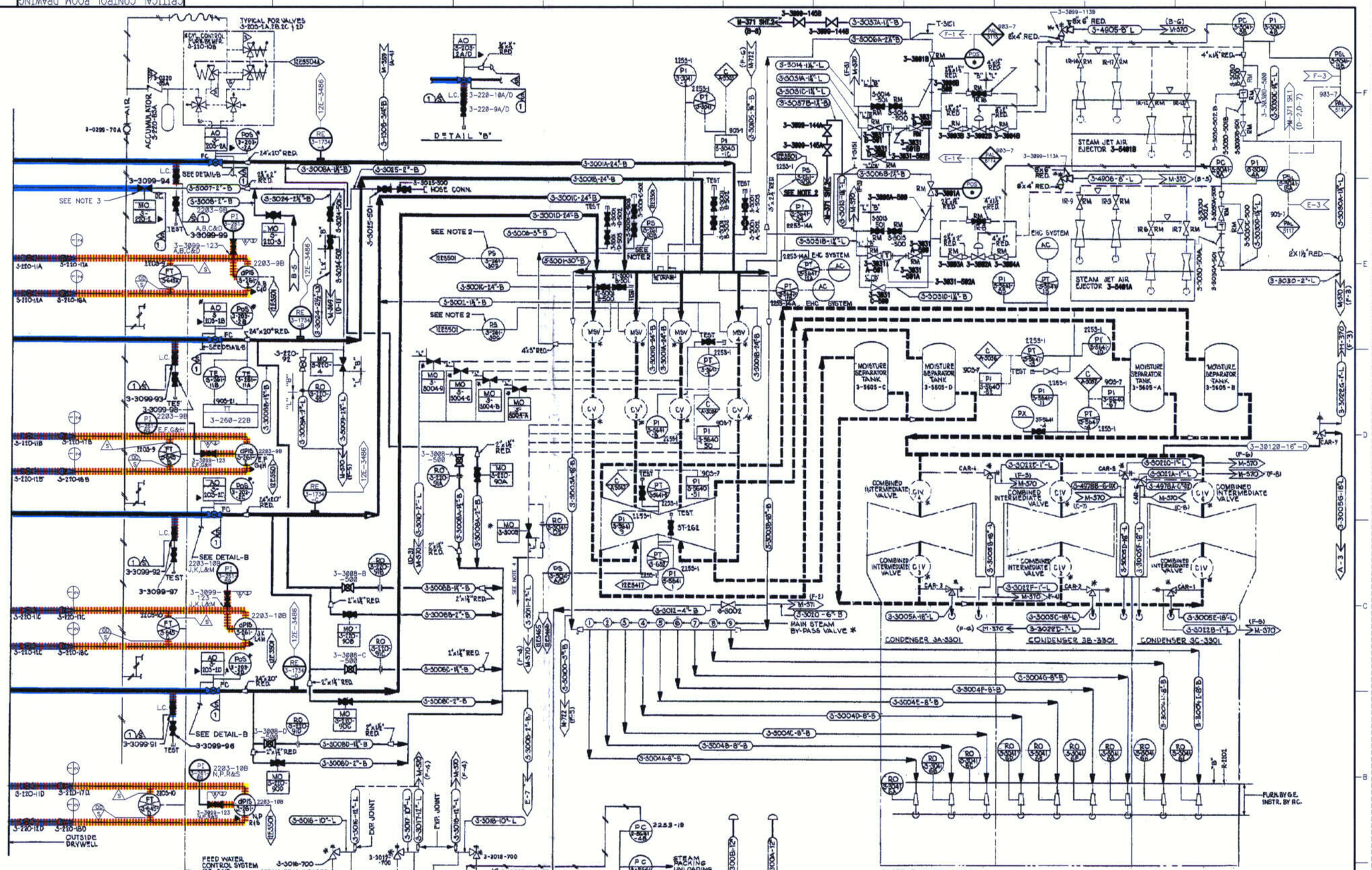

NOTES:

1. RADIATION ELEMENTS TO BE LOCATED ADJACENT TO MAIN STEAM LINE IN MAIN STEAM TUNNEL. RADIOGRAPH ALL WELDS (EXCEPT SOCKET WELDS) UNLESS NOTED OTHERWISE PER LEGEND SYMBOL △
2. P5-3-261-30 A – D TO BE INSTALLED WITH VIBRATION ISOLATORS (REF M-310, SHT. 232)
3. HOLE HAS BEEN DRILLED IN VALVE DISK ON REACTOR VESSEL SIDE TO PREVENT PRESSURE LOCKING.
4. PIPING AND FTG. REPLACED W/CHROMEMOLY (ACCEPTABLE PER SPEC. K-4000 SECTION 1501.19D) (REF. ER9904671).
5. VALVE 3-5600-MOVS2 MATERIAL IS A217 GR WC9. (ACCEPTABLE PER EVAL 6902).

ELECTRICAL SCHEMATIC REFERENCE

12E3363	12E3 501
12E3373	12E3504A
12E3415	12E3504B
12E3461	12E3504C
12E3462	12E3504D
12E3494	12E-3489

C22

CAD FILE CONTAINS ISI CODING SEE M-11 SH 3 FOR LAYER STRUCTURE

REV	DATE	DESCRIPTION	PREP	REVIL	APPRL
PT	06/05/02	FOR RECORD TIN EC DOF 00003336813 (UPDATED ISI INFORMATION)	JHY	RHB	MM
–	– – –		– –	– –	– –
–	– – –		– –	– –	– –
–	– – –		– –	– –	– –
–	– – –		– –	– –	– –

Exelon. Nuclear
Dresden Station 18 Units 3

NUCLEAR SAFETY RELATED EQUIPMENT IS SHOWN ON THIS DRAWING

DIAGRAM OF MAIN STEAM PIPING

SCALE : NONE
DATE : – –
DRAWN BY : – –
ORG. BY : CSRZ

M-345

SHEET NUMBER: 2 SIZE: F

CRITICAL CONTROL ROOM DRAWING

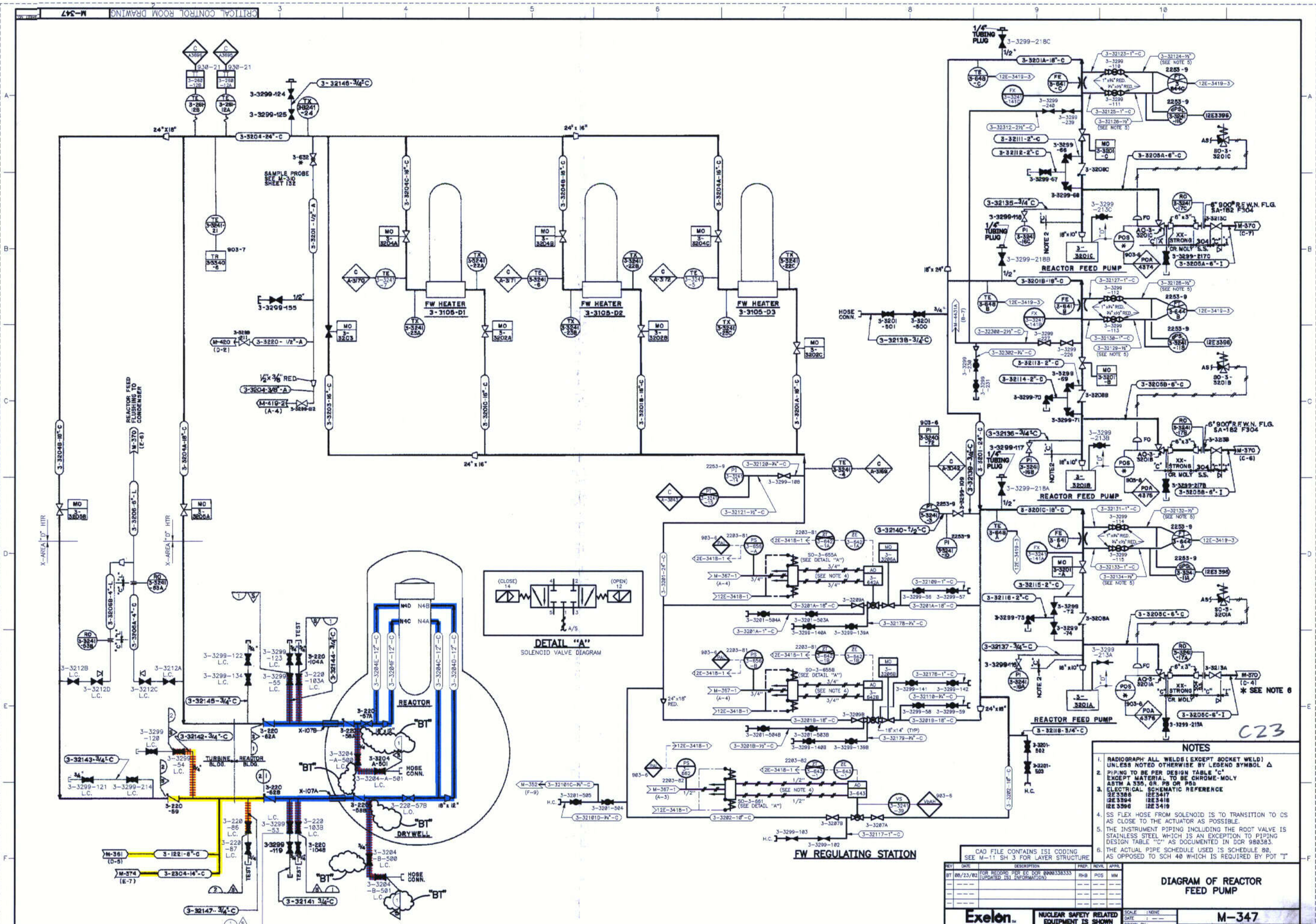

NOTES

1. RADIOGRAPH: ALL WELDS (EXCEPT SOCKET WELD) UNLESS NOTED OTHERWISE BY LEGEND SYMBOL △
2. PIPING TO BE PER DESIGN TABLE "C" EXCEPT MATERIAL TO BE CHROME-MOLY ASTM A 335, GR. P5 OR P5b
3. ELECTRICAL SCHEMATIC REFERENCE

2E3386	12E3417	
12E3394	12E3418	
12E3396	12E3419	

4. SS FLEX HOSE FROM SOLENOID IS TO TRANSITION TO CS AS CLOSE TO THE ACTUATOR AS POSSIBLE.
5. THE INSTRUMENT PIPING INCLUDING THE ROOT VALVE IS STAINLESS STEEL WHICH IS AN EXCEPTION TO PIPING DESIGN TABLE "C" AS DOCUMENTED IN DCR 980383.
6. THE ACTUAL PIPE SCHEDULE USED IS SCHEDULE 80, AS OPPOSED TO SCH 40 WHICH IS REQUIRED BY PDT "I"

CAD FILE CONTAINS ISI CODING
SEE M-11 SH 3 FOR LAYER STRUCTURE

REV	DATE	DESCRIPTION	PREP.	REVIL	APPR.
BT	08/23/02	FOR RECORD PER EC DCR 000038333 (UPDATED ISI INFORMATION)	RHB	POS	MM

Exelon. Nuclear
Dresden Station U1 Unit 3

NUCLEAR SAFETY RELATED EQUIPMENT IS SHOWN ON THIS DRAWING

DIAGRAM OF REACTOR FEED PUMP

SCALE: NONE
DATE: ---
DRAWN BY: ---
ORG. BY: CS02

M-347

SHEET NUMBER: SIZE: F

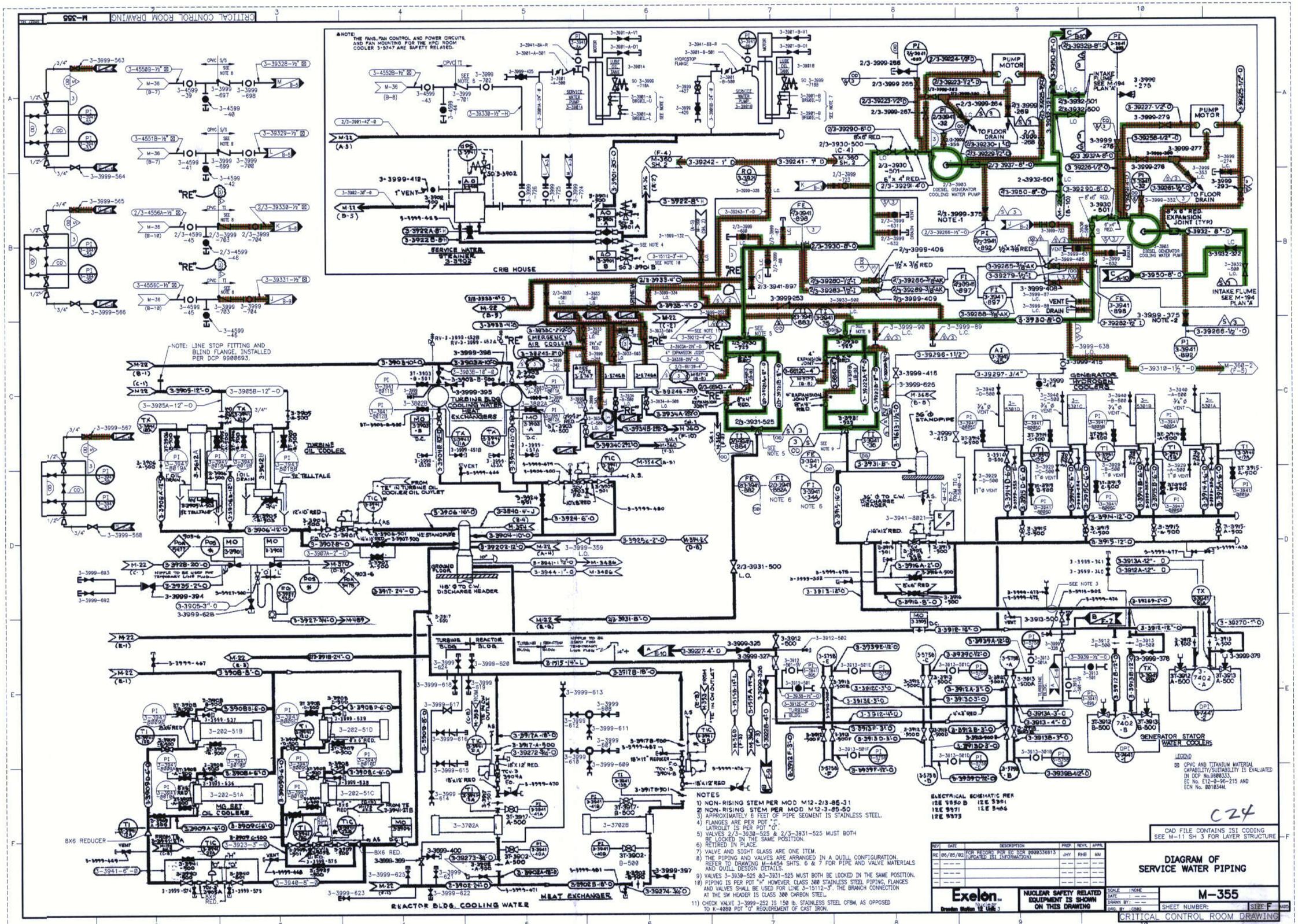
CRITICAL CONTROL ROOM DRAWING
M-355
CRIB HOUSE
SERVICE WATER STRAINER 3-3902
EMERGENCY AIR COOLERS
TURBINE BLDG COOLING WATER HEAT EXCHANGERS
TURBINE OIL COOLER
MG SET OIL COOLERS
GROUND FLOOR
18" Ø TO C.W. DISCHARGE HEADER
PUMP MOTOR
INTAKE FLUME SEE M-194 PLAN 'A'
TO FLOOR DRAIN
DIESEL GENERATOR COOLING WATER PUMP
GENERATOR HYDROGEN COOLERS
GENERATOR STATOR WATER COOLERS
REACTOR BLDG. COOLING WATER
HEAT EXCHANGER
NOTES
1) NON-RISING STEM PER MOD M12-2/3-85-31
2) NON-RISING STEM PER MOD M12-3-85-50
3) APPROXIMATELY 6 FEET OF PIPE SEGMENT IS STAINLESS STEEL.
4) FLANGES ARE PER PDT "J". LATROLET IS PER PDT "O".
5) VALVES 2/3-3930-525 & 2/3-3931-525 MUST BOTH BE LOCKED IN THE SAME POSITION.
6) RETIRED IN PLACE.
7) VALVE AND SIGHT GLASS ARE ONE ITEM.
8) THE PIPING AND VALVES ARE ARRANGED IN A QUILL CONFIGURATION. REFER TO DRAWING M-4454 SHTS. 6 & 7 FOR PIPE AND VALVE MATERIALS AND QUILL DESIGN DETAILS.
9) VALVES 3-3930-525 &3-3931-525 MUST BOTH BE LOCKED IN THE SAME POSITION.
10) PIPING IS PER PDT "H" HOWEVER, CLASS 300 STAINLESS STEEL PIPING, FLANGES AND VALVES SHALL BE USED FOR LINE 3-15112-3". THE BRANCH CONNECTION AT THE SW HEADER IS CLASS 300 CARBON STEEL.
11) CHECK VALVE 3-3999-252 IS 150 lb. STAINLESS STEEL CFBM, AS OPPOSED TO K-4080 PDT "O" REQUIREMENT OF CAST IRON.
ELECTRICAL SCHEMATIC REF
12E 5350 B 12E 5361
12E 5371 12E 5486
12E 5373
LEGEND
CPVC AND TITANIUM MATERIAL CAPABILITY/SUITABILITY IS EVALUATED IN DCP No.9800333, EC No. E12-0-96-215 AND ECN No. B018344.
C24
CAD FILE CONTAINS ISI CODING SEE M-11 SH 3 FOR LAYER STRUCTURE
DIAGRAM OF SERVICE WATER PIPING
M-355
SHEET NUMBER:
SIZE: F
REV DATE DESCRIPTION PREP REVR. APPR.
RE 06/05/02 FOR RECORD PER EC DCR B00033681 UPDATED ISI INFORMATION JHY RHB MW
Exelon. Nuclear
Dresden Station 12 Unit 3
NUCLEAR SAFETY RELATED EQUIPMENT IS SHOWN ON THIS DRAWING
SCALE NONE
DRAWN BY
CRITICAL CONTROL ROOM DRAWING

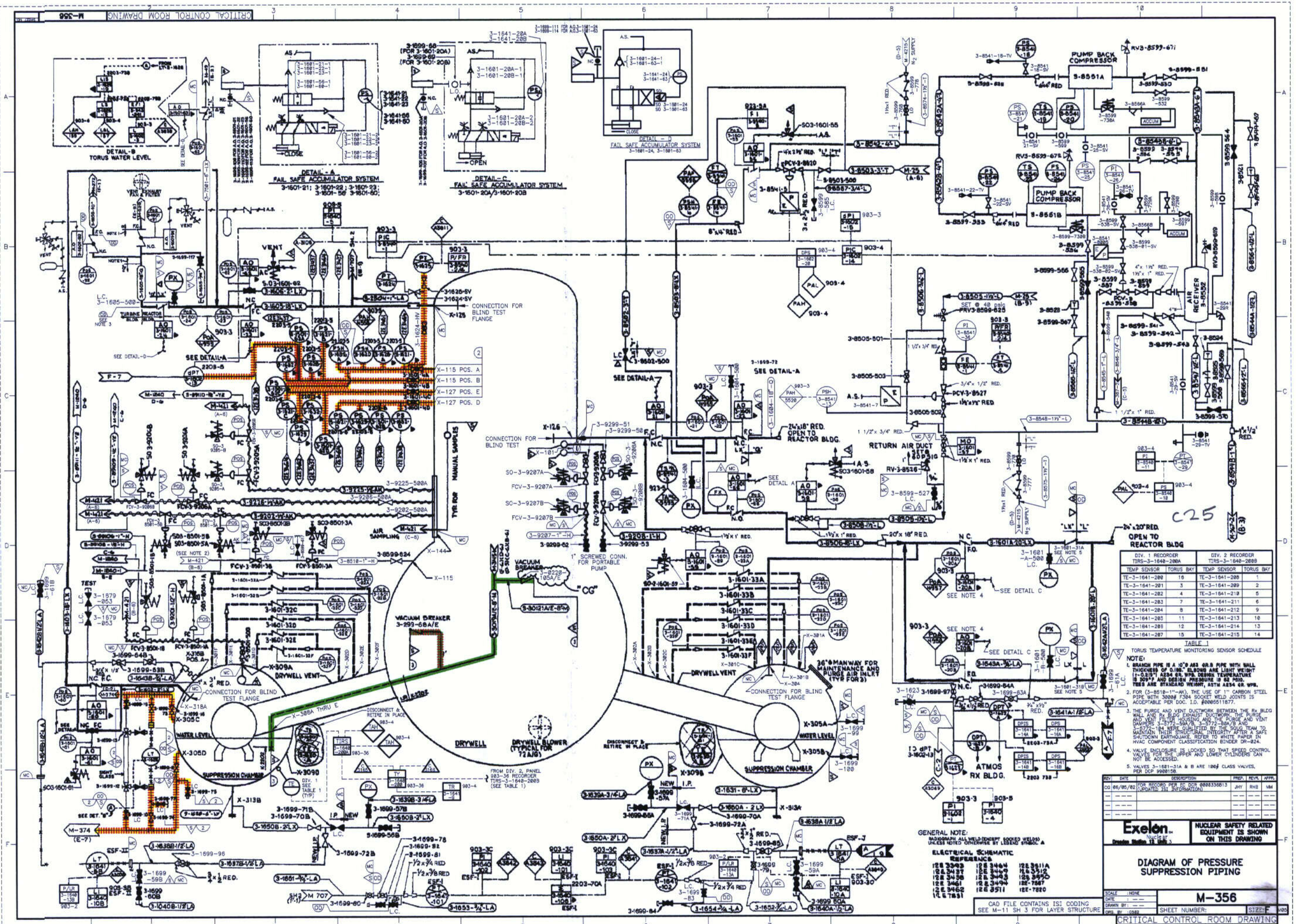
DETAIL-B
TORUS WATER LEVEL
DETAIL - A
FAIL SAFE ACCUMULATOR SYSTEM
3-1601-21; 3-1601-22; 3-1601-23;
3-1601-56 3-1601-60
DETAIL - C
FAIL SAFE ACCUMULATOR SYSTEM
3-1601-20A/3-1601-20B
DETAIL - D
FAIL SAFE ACCUMULATOR SYSTEM
3-1601-24, 3-1601-63
PUMP BACK COMPRESSOR
S-8551A
PUMP BACK COMPRESSOR
S-8551B
AIR RECEIVER
3-8532
RETURN AIR DUCT
CONNECTION FOR BLIND TEST FLANGE
CONNECTION FOR BLIND TEST
X-115 POS. A
X-115 POS. B
X-127 POS. E
X-127 POS. D
MANUAL SAMPLES
AIR SAMPLING
VACUUM BREAKER
3-299-68A/E
DRYWELL VENT
DRYWELL
DRYWELL BLOWER (TYPICAL FOR 72A/B)
SUPPRESSION CHAMBER
WATER LEVEL
36"ø MANWAY FOR MAINTENANCE AND PURGE AIR INLET (TYP FOR 2)
OPEN TO REACTOR BLDG.
OPEN TO REACTOR BLDG
ATMOS RX BLDG.
C25
DIV. 1 RECORDER
TIRS-3-1640-200A
DIV. 2 RECORDER
TIRS-3-1640-200B
TEMP SENSOR | TORUS BAY | TEMP SENSOR | TORUS BAY
TE-3-1641-200 | 16 | TE-3-1641-208 | 1
TE-3-1641-201 | 3 | TE-3-1641-209 | 2
TE-3-1641-202 | 4 | TE-3-1641-210 | 5
TE-3-1641-203 | 7 | TE-3-1641-211 | 6
TE-3-1641-204 | 8 | TE-3-1641-212 | 9
TE-3-1641-205 | 11 | TE-3-1641-213 | 10
TE-3-1641-206 | 12 | TE-3-1641-214 | 13
TE-3-1641-207 | 15 | TE-3-1641-215 | 14
TABLE 1
TORUS TEMPERATURE MONITORING SENSOR SCHEDULE
NOTE:
1. BRANCH PIPE IS A 10"Ø A53 GR.B PIPE WITH WALL THICKNESS OF 0.188". ELBOWS ARE LIGHT WEIGHT (t=0.219") A234 GR. WPB. DESIGN TEMPERATURE IS 309°F AND DESIGN PRESSURE IS 62 PSIG. TEES ARE STANDARD WEIGHT, ASTM A234 GR. WPB.
2. FOR (3-8518-1"-AK), THE USE OF 1" CARBON STEEL PIPE WITH 3000# F304 SOCKET WELD JOINTS IS ACCEPTABLE PER DOC. I.D. #0005511877.
3. THE PURGE AND VENT DUCTWORK BETWEEN THE Rx BLDG WALL AND Rx BLDG EXHAUST DUCTWORK, THE PURGE AND VENT FILTER HOUSING AND THE PURGE AND VENT DAMPERS 3-8772-594/A, 3-8772-594/B AND 3-8772-184 WERE QUALIFIED BY THE SQUG TEAM TO MAINTAIN THEIR STRUCTURAL INTEGRITY AFTER A SAFE SHUTDOWN EARTHQUAKE. REFER TO WHITE PAPER IN HVAC COMPONENT CLASSIFICATION BINDER DR-824.
4. VALVE ENCLOSURE IS LOCKED SO THAT SPEED CONTROL VALVES FOR THE UPPER AND LOWER CYLINDERS CAN NOT BE ACCESSED.
5. VALVES 3-1621-31A & B ARE 1000# CLASS VALVES, PER DCP 9900158.
GENERAL NOTE:
RADIOGRAPH ALL WELD (EXCEPT SOCKET WELDS) UNLESS NOTED OTHERWISE BY LISTING STRUCT. A
ELECTRICAL SCHEMATIC REFERENCE
12E 3393 12E 3464N 12E 3511A
12A 3437 12E 3469 12A 3512
12E 3458 12A 3493 12A 3490
12E 3461 12A 3494 12E 7587
12E 3462 12E 3511 12E 7820
12E 7851
CAD FILE CONTAINS ISI CODING
SEE M-11 SH 3 FOR LAYER STRUCTURE
REV | DATE | DESCRIPTION | PREP. | REVIL | APPR.
00 | 06/05/02 | FOR RECORD PER EC DCR 0000336813 (UPDATED ISI INFORMATION) | JHY | RHB | NM
Exelon.
Nuclear
Dresden Station 19 Units 2 & 3
NUCLEAR SAFETY RELATED EQUIPMENT IS SHOWN ON THIS DRAWING
DIAGRAM OF PRESSURE SUPPRESSION PIPING
SCALE : NONE
DATE : — —
DRAWN BY : — —
ORG. BY : CS02
M-356
SHEET NUMBER:
SIZE: F
CRITICAL CONTROL ROOM DRAWING

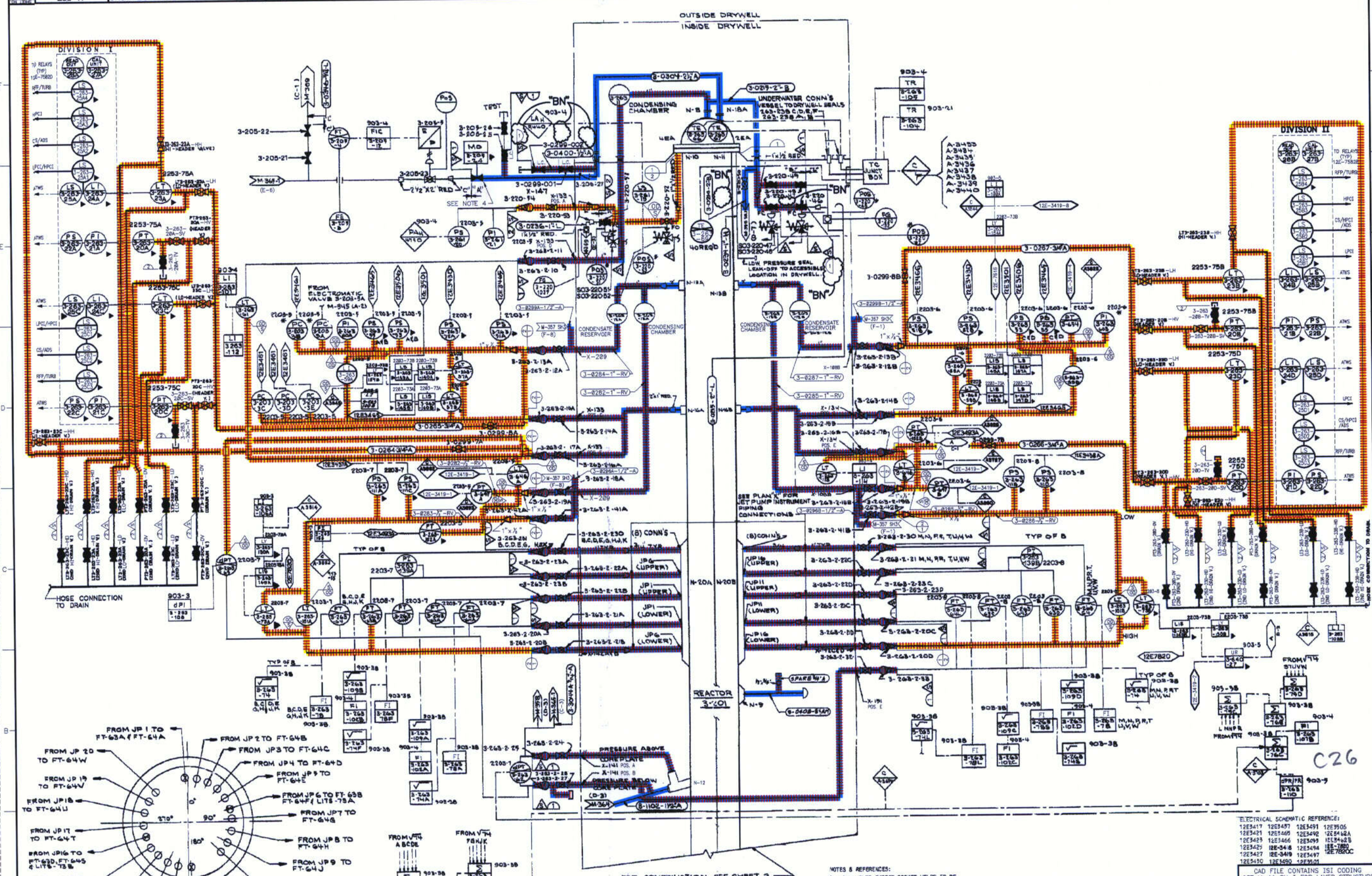

ELECTRICAL SCHEMATIC REFERENCES:
12E3417 12E3487 12E3491 12E3506
12E3421 12E3465 12E3492 12E3492A
12E3423 12E3466 12E3493 12E3492B
12E3425 12E-3418 12E3494 12E-7820
12E3427 12E-3419 12E3497 12E7820C
12E3430 12E3490 12E3501

CAD FILE CONTAINS ISI CODING
SEE M-11 SH 3 FOR LAYER STRUCTURE

NOTES & REFERENCES:

1. ALL WELDS EXCEPT SOCKET WELDS TO BE RADIOGRAPHED UNLESS NOTED BY LEGEND A.
2. SEE DRAWING M-310 SHEET 72 FOR ELEVATION CORRELATION CHART SHOWING ALARMS, TRIP AND SCALE SET POINTS.
3. THE ATWS SYSTEM IS A NON-SAFETY RELATED SYSTEM, BUT DUE TO INTERFACE REQUIREMENTS IT WAS DESIGNED SAFETY-RELATED AND SEISMICALLY SUPPORTED.
4. HOLE HAS BEEN DRILLED IN VALVE DISK ON REACTOR VESSEL SIDE TO PREVENT PRESSURE LOCKING.

REV	DATE	DESCRIPTION	PREP.	REVIL.	APPR.
BN	08/23/02	FOR RECORD PER EC DCR 0000338333 (UPDATED ISI INFORMATION)	RHB	POS	MM
—	— — —		— — —	— — —	— — —
—	— — —		— — —	— — —	— — —
—	— — —		— — —	— — —	— — —
—	— — —		— — —	— — —	— — —

Exelon. Nuclear
Dresden Station 19 Units 2 & 3

NUCLEAR SAFETY RELATED EQUIPMENT IS SHOWN ON THIS DRAWING

DIAGRAM OF NUCLEAR BOILER & REACTOR RECIRCULATION PIPING

SCALE: NONE
DATE: — —
DRAWN BY: — —
DRG. BY: CSRZ

M-357

SHEET NUMBER: 1 SIZE: F

CRITICAL CONTROL ROOM DRAWING

12 03 BN 23A002 A D CR

C27

NOTES

1. DESIGNED SEISMIC CLASS 1 UP TO FIRST ANCHOR.
2. PIPING IS DESIGNED NON-SAFETY SEISMIC CLASS 1
3. THE BYPASS LINE WITH GATE VALVE AND CHECK VALVE PROVIDES OVER PRESSURE PROTECTION DURING LOCA/MSLB ACCIDENT CONDITIONS.

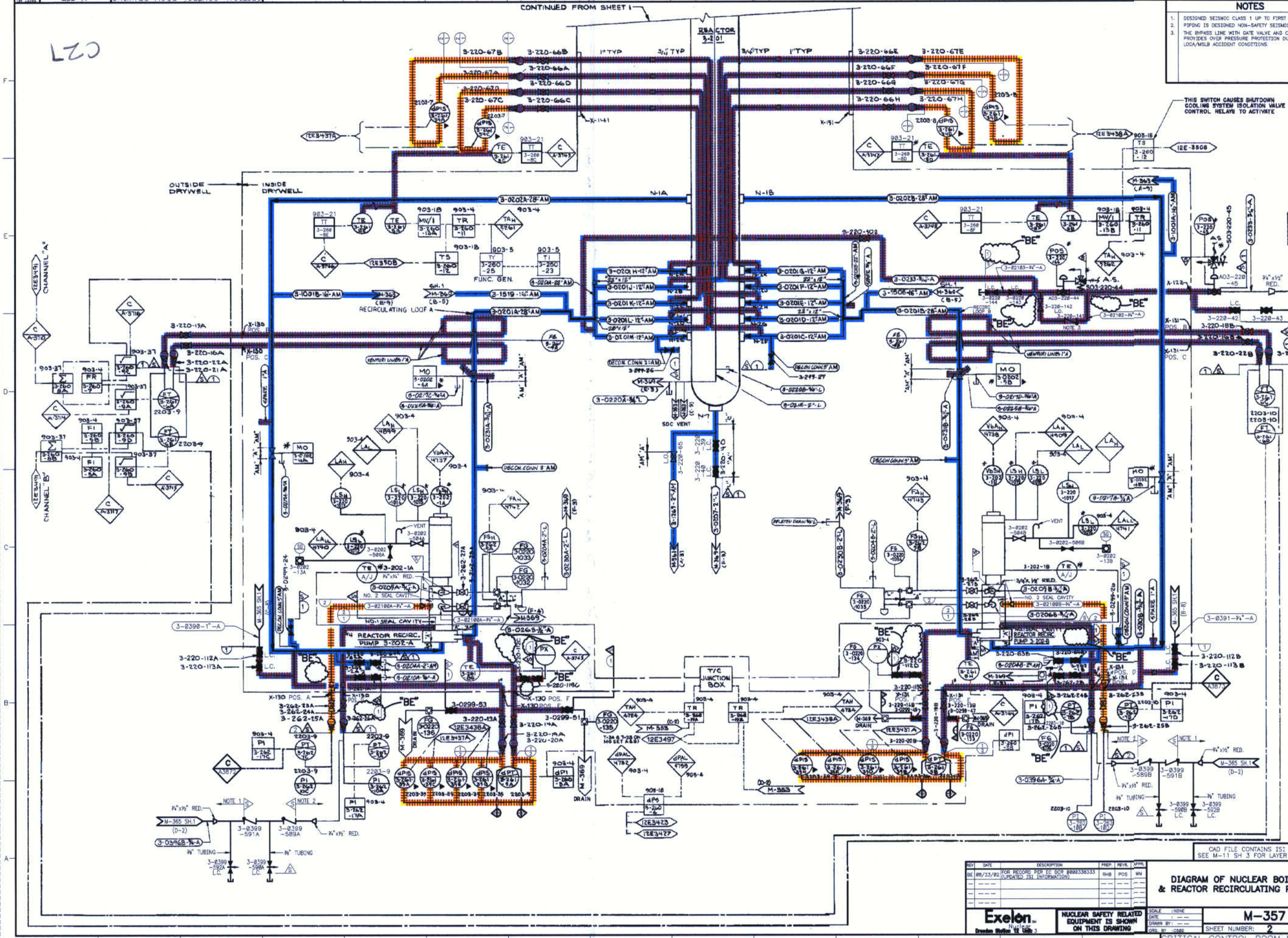

CAD FILE CONTAINS ISI CODING
SEE M-11 SH 3 FOR LAYER STRUCTURE

REV	DATE	DESCRIPTION	PREP.	REVIE.	APPR.
BE	08/23/02	(FOR RECORD PER EC DCR 00023383333 (UPDATED ISI INFORMATION)	RHB	POS	MM

DIAGRAM OF NUCLEAR BOILER & REACTOR RECIRCULATING PIPING

Exelon. Nuclear
Dresden Station 18 Units 3

NUCLEAR SAFETY RELATED EQUIPMENT IS SHOWN ON THIS DRAWING

SCALE: NONE
DATE: ---
DRAWN BY: ---
ORIG. BY: CABS

M-357

SHEET NUMBER: 2 SIZE: F

CRITICAL CONTROL ROOM DRAWING

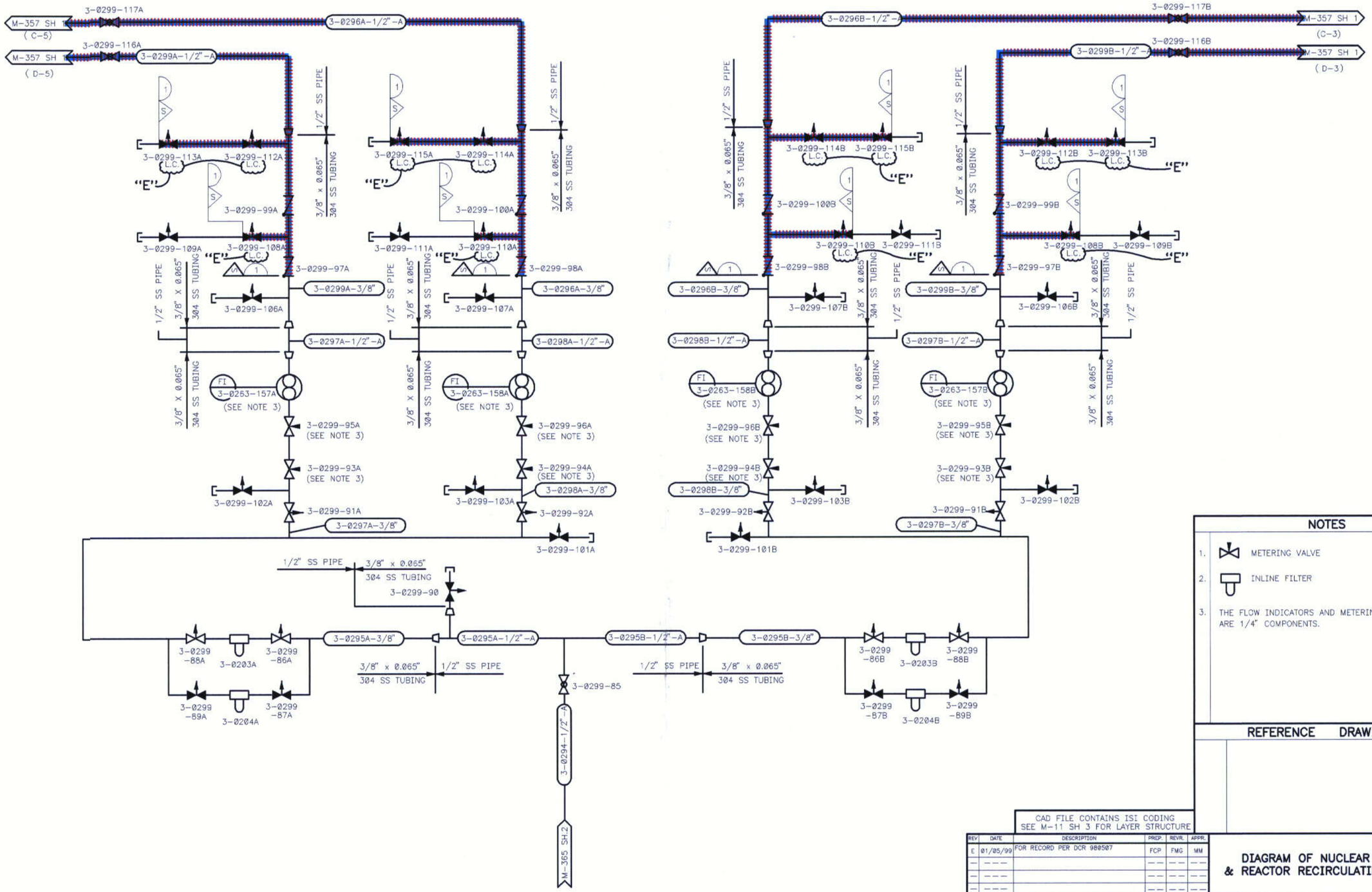

C28

NOTES

1. METERING VALVE
2. INLINE FILTER
3. THE FLOW INDICATORS AND METERING VALVES ARE 1/4" COMPONENTS.

REFERENCE DRAWINGS

CAD FILE CONTAINS ISI CODING
SEE M-11 SH 3 FOR LAYER STRUCTURE

REV	DATE	DESCRIPTION	PREP.	REVR.	APPR.
E	01/05/99	FOR RECORD PER DCR 980507	FCP	FMG	MM

ComEd
Chicago, Illinois
Dresden Station 12 Units 3

NUCLEAR SAFETY RELATED EQUIPMENT IS SHOWN ON THIS DRAWING

DIAGRAM OF NUCLEAR BOILER & REACTOR RECIRCULATING PIPING

SCALE : NONE
DATE : ---
DRAWN BY : ---
ORG. BY : C582

M-357

SHEET NUMBER: 3 SIZE: D

CRITICAL CONTROL ROOM DRAWING

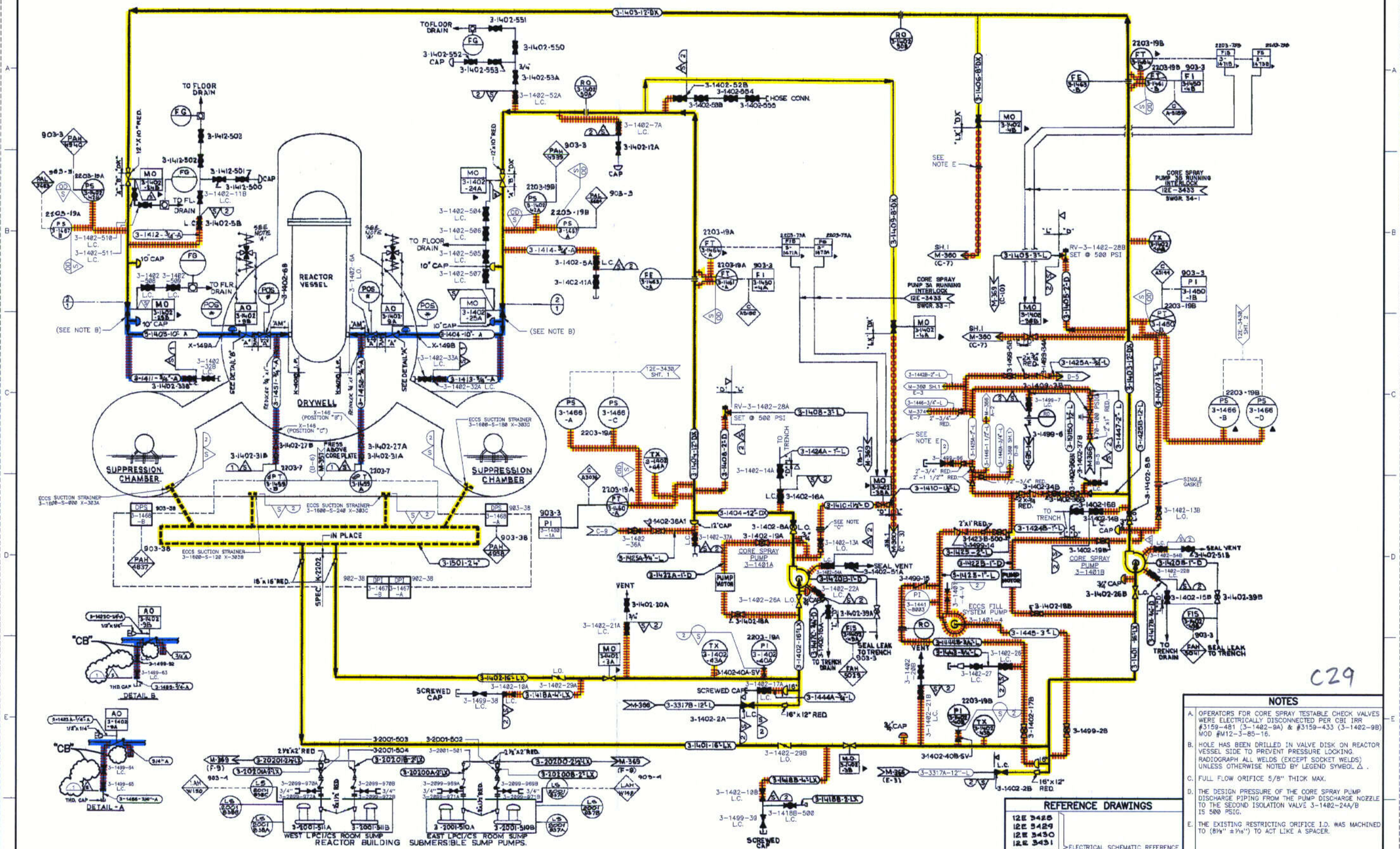

C29

NOTES

A. OPERATORS FOR CORE SPRAY TESTABLE CHECK VALVES WERE ELECTRICALLY DISCONNECTED PER CBI IRR #3159-481 (3-1402-9A) & #3159-433 (3-1402-9B) MOD #M12-3-85-16.

B. HOLE HAS BEEN DRILLED IN VALVE DISK ON REACTOR VESSEL SIDE TO PREVENT PRESSURE LOCKING. RADIOGRAPH ALL WELDS (EXCEPT SOCKET WELDS) UNLESS OTHERWISE NOTED BY LEGEND SYMBOL △ .

C. FULL FLOW ORIFICE 5/8" THICK MAX.

D. THE DESIGN PRESSURE OF THE CORE SPRAY PUMP DISCHARGE PIPING FROM THE PUMP DISCHARGE NOZZLE TO THE SECOND ISOLATION VALVE 3-1402-24A/B IS 500 PSIG.

E. THE EXISTING RESTRICTING ORIFICE I.D. WAS MACHINED TO (8⅛" ± 1/16") TO ACT LIKE A SPACER.

REFERENCE DRAWINGS

12E 3428
12E 3429
12E 3430
12E 3431
12E 3432
12E 3433
12E 3485
12E 7820

ELECTRICAL SCHEMATIC REFERENCE

REV	DATE	DESCRIPTION	PREP.	REVIL	APPR.
CB	08/23/02	FOR RECORD PER EC DCR 00003383333 (UPDATED ISI INFORMATION)	RHB	POS	MM

CAD FILE CONTAINS ISI CODING
SEE M-11 SH 3 FOR LAYER STRUCTURE

Exelon. NUCLEAR
Dresden Station 2 & Unit 3

NUCLEAR SAFETY RELATED EQUIPMENT IS SHOWN ON THIS DRAWING

DIAGRAM OF CORE SPRAY PIPING

SCALE : NONE
DATE : — —
DRAWN BY : — —
DWG. BY : CSD2

M-358

SHEET NUMBER: SIZE: F

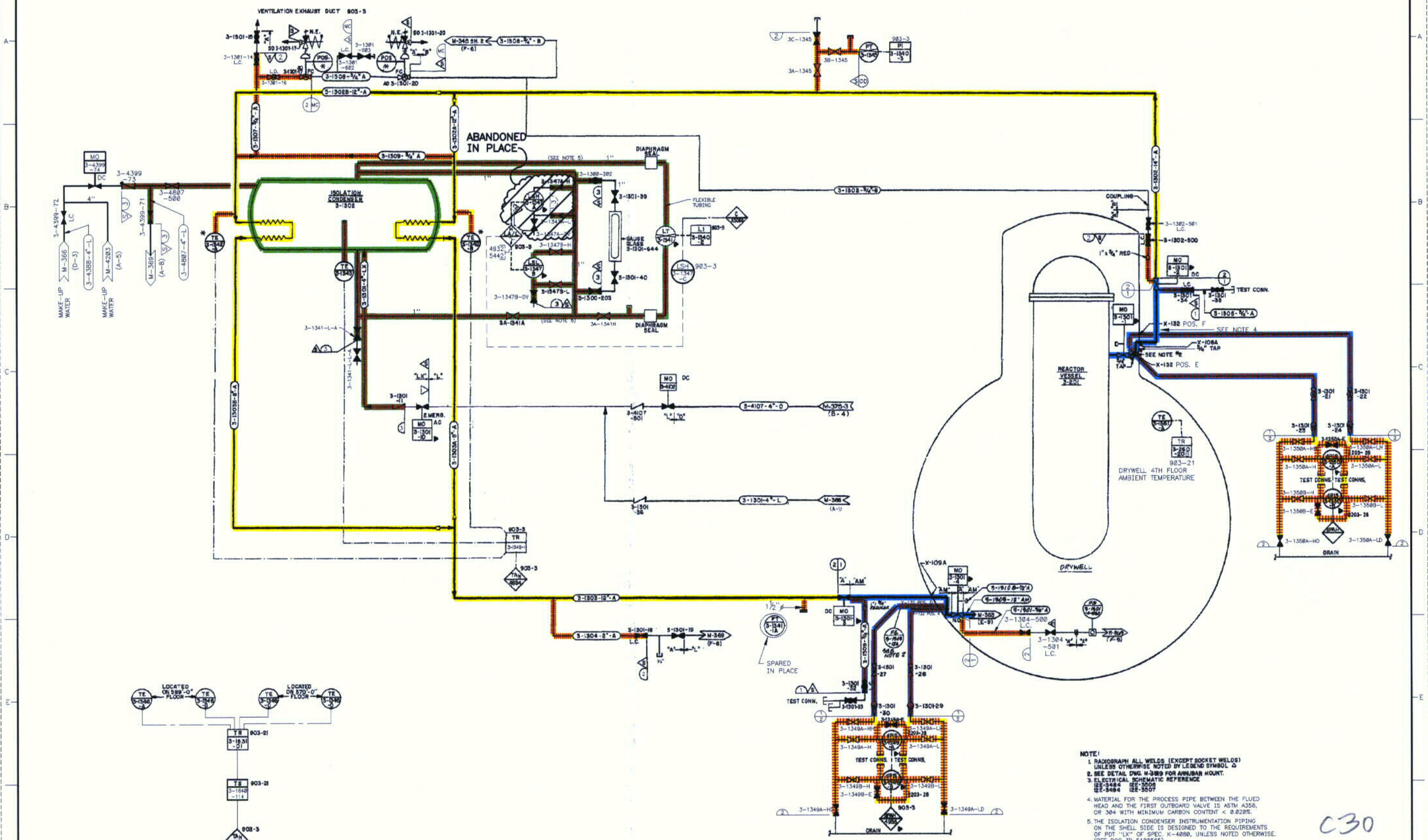

NOTE:

1. RADIOGRAPH ALL WELDS (EXCEPT SOCKET WELDS) UNLESS OTHERWISE NOTED BY LEGEND SYMBOL Δ
2. SEE DETAIL DWG. M-389 FOR ANNULAR MOUNT.
3. ELECTRICAL SCHEMATIC REFERENCE
   12E-3484 12E-5506
   12E-3494 12E-5507
4. MATERIAL FOR THE PROCESS PIPE BETWEEN THE FLUED HEAD AND THE FIRST OUTBOARD VALVE IS ASTM A358, OR 304 WITH MINIMUM CARBON CONTENT < 0.020%.
5. THE ISOLATION CONDENSER INSTRUMENTATION PIPING ON THE SHELL SIDE IS DESIGNED TO THE REQUIREMENTS OF PDT "LX" OF SPEC. K-4050, UNLESS NOTED OTHERWISE. (REF DOC ID 5188565)

C30

CAD FILE CONTAINS ISI CODING
SEE M-11 SH 3 FOR LAYER STRUCTURE

REV	DATE	DESCRIPTION	PREP.	REVIL.	APPR.
BF	01/12/02	FOR RECORD PER EC DCP #00033745 (UPDATED ISI INFORMATION)	PGR	KLS	DEM

Exelon. Nuclear
Dresden Station 2 & Unit 3

NUCLEAR SAFETY RELATED EQUIPMENT IS SHOWN ON THIS DRAWING

DIAGRAM OF ISOLATION CONDENSER PIPING

SCALE : NONE
DATE : — —
DRAWN BY : — —
DSG. BY : CORE

SHEET NUMBER: M-359
SIZE: F

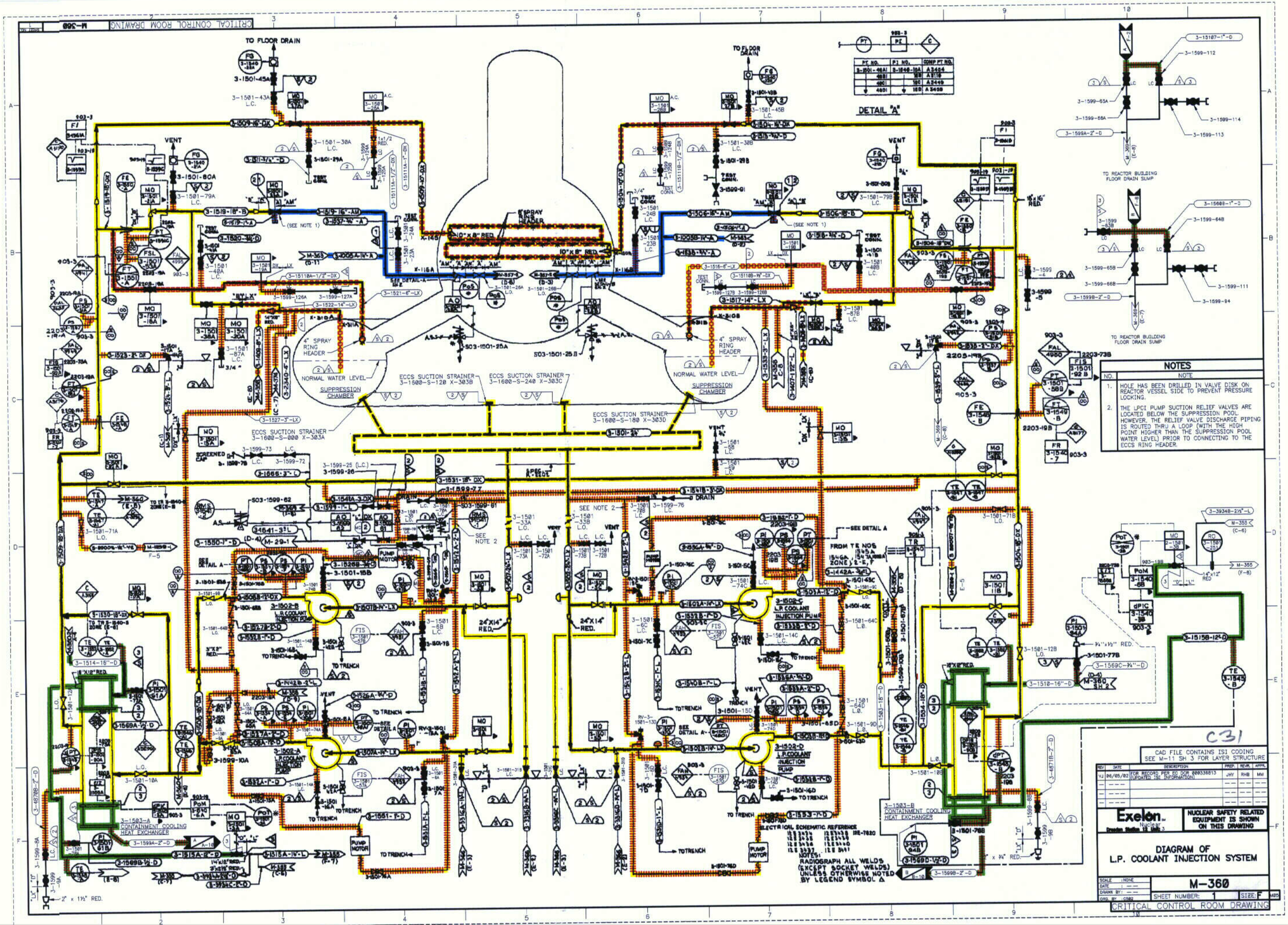
CRITICAL CONTROL ROOM DRAWING
M-360
TO FLOOR DRAIN
VENT
DETAIL "A"
SUPPRESSION CHAMBER
NORMAL WATER LEVEL
4" SPRAY RING HEADER
ECCS SUCTION STRAINER
TO REACTOR BUILDING FLOOR DRAIN SUMP
TO TRENCH
DRAIN
SEE DETAIL A
SEE NOTE 1
SEE NOTE 2
L.P. COOLANT INJECTION PUMP
CONTAINMENT COOLING HEAT EXCHANGER
ELECTRICAL SCHEMATIC REFERENCE
NOTES:
RADIOGRAPH ALL WELDS (EXCEPT SOCKET WELDS) UNLESS OTHERWISE NOTED BY LEGEND SYMBOL Δ
NOTES
1. HOLE HAS BEEN DRILLED IN VALVE DISK ON REACTOR VESSEL SIDE TO PREVENT PRESSURE LOCKING.
2. THE LPCI PUMP SUCTION RELIEF VALVES ARE LOCATED BELOW THE SUPPRESSION POOL. HOWEVER, THE RELIEF VALVE DISCHARGE PIPING IS ROUTED THRU A LOOP (WITH THE HIGH POINT HIGHER THAN THE SUPPRESSION POOL WATER LEVEL) PRIOR TO CONNECTING TO THE ECCS RING HEADER.
C31
CAD FILE CONTAINS ISI CODING
SEE M-11 SH 3 FOR LAYER STRUCTURE
06/05/02 FOR RECORD PER EC DCR 000336813 (UPDATED ISI INFORMATION)
Exelon Nuclear
Dresden Station 19 Unit 3
NUCLEAR SAFETY RELATED EQUIPMENT IS SHOWN ON THIS DRAWING
DIAGRAM OF
L.P. COOLANT INJECTION SYSTEM
M-360
SHEET NUMBER: 1
SIZE: F
CRITICAL CONTROL ROOM DRAWING

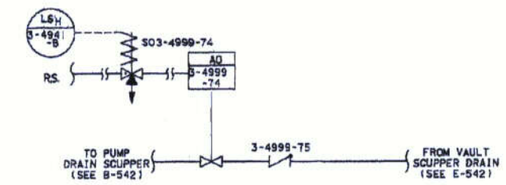

CCSW SCUPPER DRAIN

NOTE:

1. NOTE DELETED
2. SUCTION BAY LEVEL FLOAT (LX 2/3-4450-65) IS LOCATED APPROXIMATELY 4'-0" N.W. OF THE 2/3 DIESEL FIRE PUMP IN THE 2/3 CRIB HOUSE. THIS FLOAT CONSISTS OF A CHAIN, ONE END OF WHICH IS LOOPED THROUGH THE GRATING ON EL. 509'-6" AND PADLOCKED TO ITSELF. THE OTHER END OF THE CHAIN IS ATTACHED TO THE FLOAT (BUOY).
3. FLANGES ARE RATED AT 150#, HYDROSTATIC TEST PRESSURE FOR VALVES 3-1599-80B/C SHALL BE LIMITED TO 315 PSIG.
4. VALVES 3-1599-33B & 33C ARE LOCKED THROTTLED.
5. PIPING IS PER PDT "H", HOWEVER CLASS 300 STAINLESS STEEL PIPING, FLANGES AND VALVES SHALL BE USED FOR LINES 3-15112A-3", 3-15112B-3" & 3-15112-3". THE BRANCH CONNECTIONS AT CCSW HEADERS SHALL BE CLASS 300 CARBON STEEL.
6. PISTON CHECK VALVE 3-1599-131A & 3-1599-131B HAVE AN OPENING PRESSURE OF 100 PSIG.
7. VALVES 3-3999-337 AND3-3999-339 ARE THREADED AS OPPOSED TO SOCKET WELD WHICH IS REQUIRED BY PDT "D" SEE DOC. ID 0005946169
8. VALVES 3-1501-1A,B,C &D ARE FLANGED WAFER CHECK VALVES, AS OPPOSED TO K-4080 PDT "D" REQUIREMENTS. THIS IS ACCEPTABLE PER OP. EVAL. 00-012 AND PARTS EVAL 5333.
9. VALVES 3-3999-640 & 3-3999-642 ARE STAINLESS STEEL 316 CHECK VALVES AS OPPOSED TO K-4080 PDT "D" REQUIREMENT OF CARBON STEEL A 105

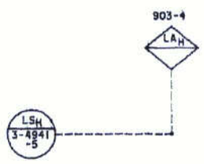

TURBINE BLDG. FLOOD PROTECTION ALARM

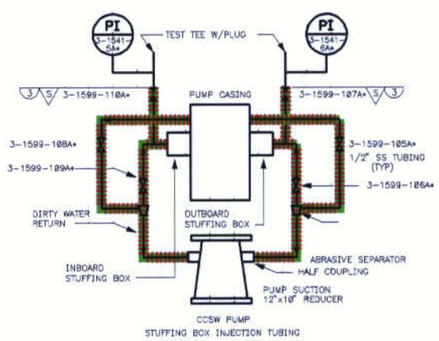

DETAIL "C"

* THE LETTER "A" DESIGNATES PUMP 3-1501-44A. SUBSTITUTE "B", "C" OR "D" FOR PUMPS 3-1501-44B, 3-1501-44C OR 3-1501-44D RESPECTIVELY.

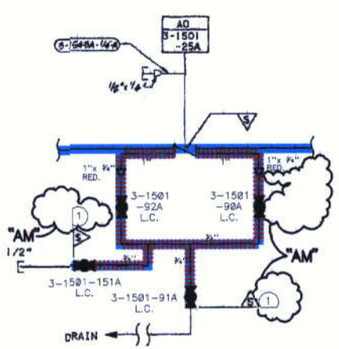

DETAIL "A"

(SEE M-360 SH. 1)

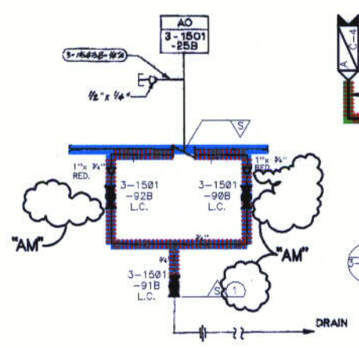

DETAIL "B"

(SEE M-360 SH. 1)

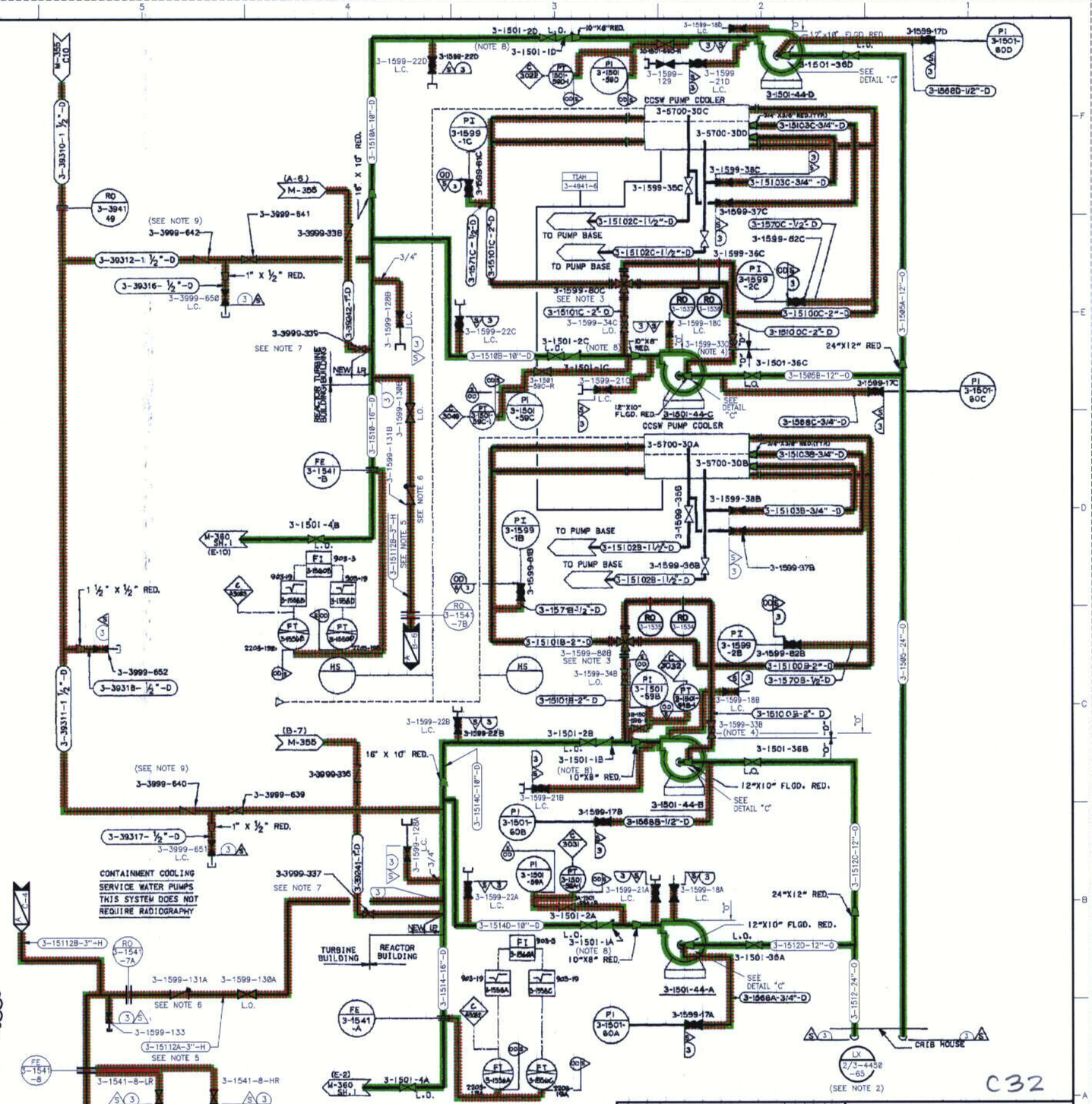

C32

REV	DATE	DESCRIPTION	PREP.	REVR.	APPR.
AM	06/23/82	FOR RECORD PER EC DCN 0000336333 (UPDATED ISI INFORMATION)	RHB	PDS	MM

CAD FILE CONTAINS ISI CODING SEE M-11 SH 3 FOR LAYER STRUCTURE

Exelon Nuclear Dresden Station 2 & Unit 3

NUCLEAR SAFETY RELATED EQUIPMENT IS SHOWN ON THIS DRAWING

DIAGRAM OF L.P. COOLANT INJECTION PIPING

SCALE: NONE
DATE: ---
DRAWN BY: ---
CRD. BY: CRBR

M-360

SHEET NUMBER: 2 SIZE: F

CRITICAL CONTROL ROOM DRAWING

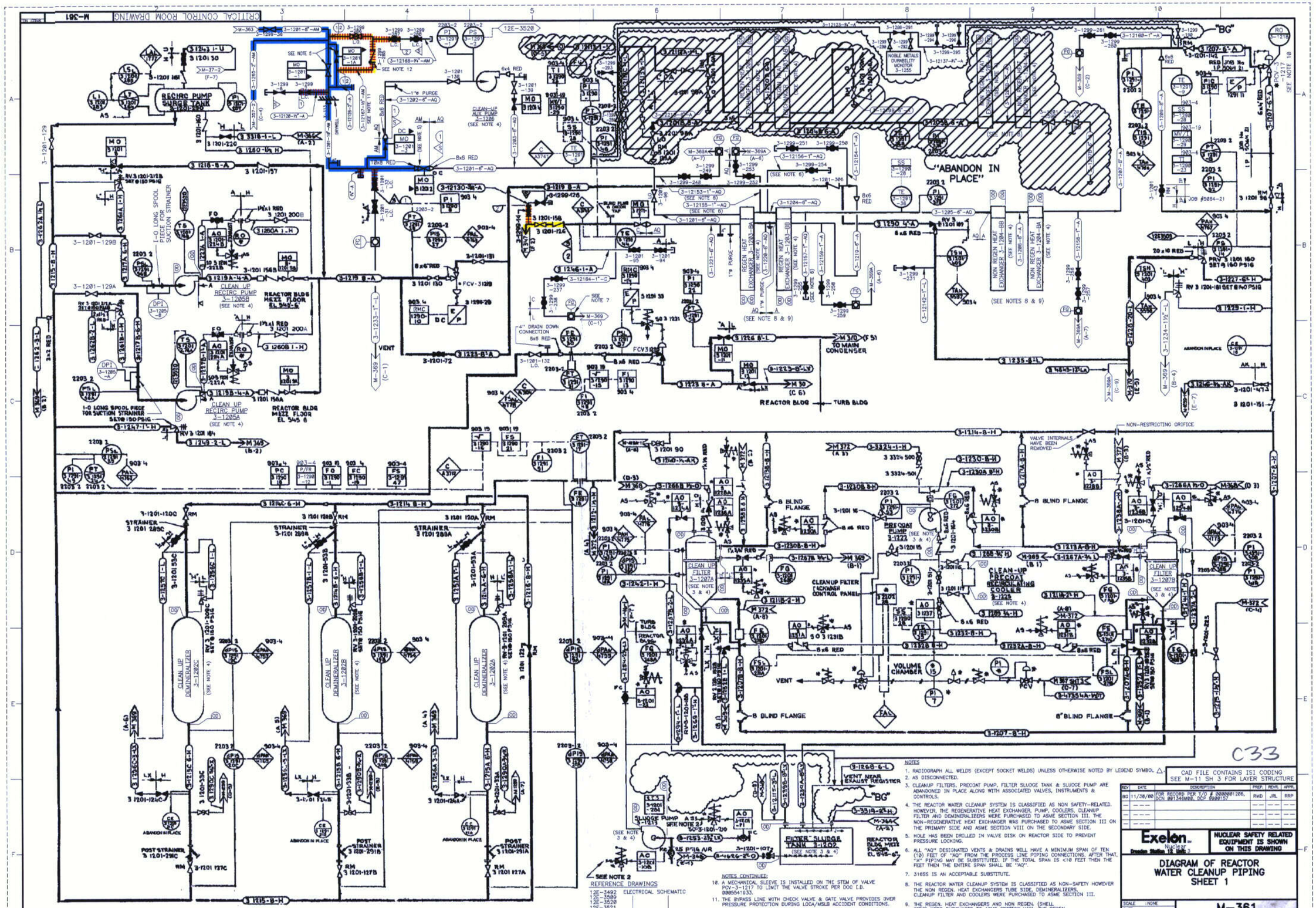

NOTES

1. RADIOGRAPH ALL WELDS (EXCEPT SOCKET WELDS) UNLESS OTHERWISE NOTED BY LEGEND SYMBOL △.
2. AS DISCONNECTED.
3. CLEANUP FILTERS, PRECOAT PUMP, FILTER SLUDGE TANK & SLUDGE PUMP ARE ABANDONED IN PLACE ALONG WITH ASSOCIATED VALVES, INSTRUMENTS & CONTROLS.
4. THE REACTOR WATER CLEANUP SYSTEM IS CLASSIFIED AS NON SAFETY-RELATED. HOWEVER, THE REGENERATIVE HEAT EXCHANGER, PUMP, COOLERS, CLEANUP FILTER AND DEMINERALIZERS WERE PURCHASED TO ASME SECTION III. THE NON-REGENERATIVE HEAT EXCHANGER WAS PURCHASED TO ASME SECTION III ON THE PRIMARY SIDE AND ASME SECTION VIII ON THE SECONDARY SIDE.
5. HOLE HAS BEEN DRILLED IN VALVE DISK ON REACTOR SIDE TO PREVENT PRESSURE LOCKING.
6. ALL "AQ" DESIGNATED VENTS & DRAINS WILL HAVE A MINIMUM SPAN OF TEN (10) FEET OF "AQ" FROM THE PROCESS LINE PIPING CONNECTIONS. AFTER THAT, "A" PIPING MAY BE SUBSTITUTED. IF THE TOTAL SPAN IS <10 FEET THEN THE FEET THEN THE ENTIRE SPAN SHALL BE "AQ".
7. 316SS IS AN ACCEPTABLE SUBSTITUTE.
8. THE REACTOR WATER CLEANUP SYSTEM IS CLASSIFIED AS NON-SAFETY HOWEVER THE NON REGEN. HEAT EXCHANGERS TUBE SIDE, DEMINERALIZERS, CLEANUP FILTER AND COOLERS WERE PURCHASED TO ASME SECTION III.
9. THE REGEN. HEAT EXCHANGERS AND NON REGEN. (SHELL SIDE) WERE PURCHASED TO ASME SECTION VIII. THE REGEN. HEAT EXCHANGERS WERE RECONCILED TO ASME SECTION III 1985 EDITION.

NOTES CONTINUED:

10. A MECHANICAL SLEEVE IS INSTALLED ON THE STEM OF VALVE POV-3-1217 TO LIMIT THE VALVE STROKE PER DOC I.D. 0000541533.
11. THE BYPASS LINE WITH CHECK VALVE & GATE VALVE PROVIDES OVER PRESSURE PROTECTION DURING LOCA/MSLB ACCIDENT CONDITIONS.
12. CHECK VALVE 3-1299-285 IS THREADED, BUT WELDED TO THE PIPE WITH A QUALIFIED SOCKET WELD (EXCEPTION TO DESIGN TABLE "AM").

CAD FILE CONTAINS ISI CODING
SEE M-11 SH 3 FOR LAYER STRUCTURE

REV	DATE	DESCRIPTION	PREP.	REVR.	APPR.
BG	11/30/00	FOR RECORD PER T/O # 0000001206, DCN 021346M00, DCP 0200157	RWD	JRL	RRP
—	—	—	—	—	—
—	—	—	—	—	—
—	—	—	—	—	—
—	—	—	—	—	—

Exelon. Nuclear
Dresden Station 10 Unit 3

NUCLEAR SAFETY RELATED EQUIPMENT IS SHOWN ON THIS DRAWING

DIAGRAM OF REACTOR WATER CLEANUP PIPING SHEET 1

SCALE : NONE
DATE : — —
DRAWN BY : — —
ORD. BY : CSBD

M-361

SHEET NUMBER: SIZE: F

CRITICAL CONTROL ROOM DRAWING

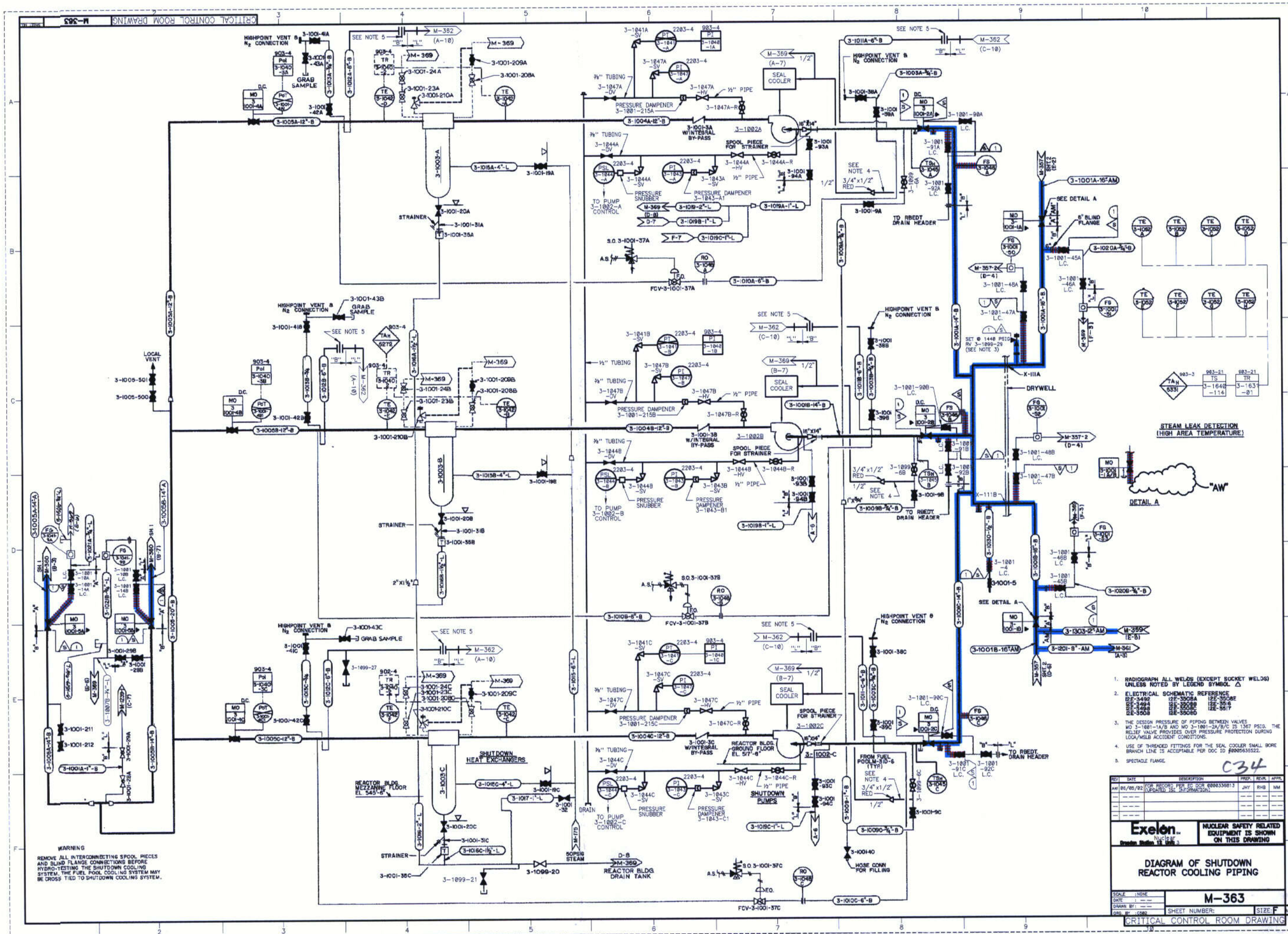
CRITICAL CONTROL ROOM DRAWING
M-363
SEAL COOLER
SPOOL PIECE FOR STRAINER
PRESSURE DAMPENER
PRESSURE SNUBBER
TO PUMP 3-1002-A CONTROL
TO PUMP 3-1002-B CONTROL
TO PUMP 3-1002-C CONTROL
TO RBEDT DRAIN HEADER
HIGHPOINT VENT & N2 CONNECTION
GRAB SAMPLE
STRAINER
SHUTDOWN HEAT EXCHANGERS
SHUTDOWN PUMPS
REACTOR BLDG. GROUND FLOOR EL 517'-6"
REACTOR BLDG. MEZZANINE FLOOR EL 545'-6"
REACTOR BLDG DRAIN TANK
50PSIG STEAM
DRYWELL
STEAM LEAK DETECTION (HIGH AREA TEMPERATURE)
DETAIL A
"AW"
6" BLIND FLANGE
FROM FUEL POOLM-310-6 (TYP)
HOSE CONN FOR FILLING
LOCAL VENT
SEE NOTE 5
SEE NOTE 4
SEE DETAIL A
WARNING
REMOVE ALL INTERCONNECTING SPOOL PIECES AND BLIND FLANGE CONNECTIONS BEFORE HYDRO-TESTING THE SHUTDOWN COOLING SYSTEM. THE FUEL POOL COOLING SYSTEM MAY BE CROSS TIED TO SHUTDOWN COOLING SYSTEM.
1. RADIOGRAPH ALL WELDS (EXCEPT SOCKET WELDS) UNLESS NOTED BY LEGEND SYMBOL △
2. ELECTRICAL SCHEMATIC REFERENCE
12E-3492 12E-3508A 12E-3508E
12E-3494 12E-3508B 12E-3516
12E-3496 12E-3508C 12E-5517
12E-3506 12E-3508D
3. THE DESIGN PRESSURE OF PIPING BETWEEN VALVES MO 3-1001-1A/B AND MO 3-1001-2A/B/C IS 1367 PSIG. THE RELIEF VALVE PROVIDES OVER PRESSURE PROTECTION DURING LOCA/MSLB ACCIDENT CONDITIONS.
4. USE OF THREADED FITTINGS FOR THE SEAL COOLER SMALL BORE BRANCH LINE IS ACCEPTABLE PER DOC ID #00N5638522.
5. SPECTACLE FLANGE.
C34
REV DATE DESCRIPTION PREP. REVR. APPR.
AW 05/05/02 FOR RECORD PER EC DCR #00N336813 (UPDATED ISI INFORMATION) JHY RHB MM
Exelon. Nuclear Dresden Station, Units 2 & 3
NUCLEAR SAFETY RELATED EQUIPMENT IS SHOWN ON THIS DRAWING
DIAGRAM OF SHUTDOWN REACTOR COOLING PIPING
SCALE : NONE
DATE : -- -- --
DRAWN BY : -- --
ORG. BY : CS02
SHEET NUMBER: M-363
SIZE F
CRITICAL CONTROL ROOM DRAWING

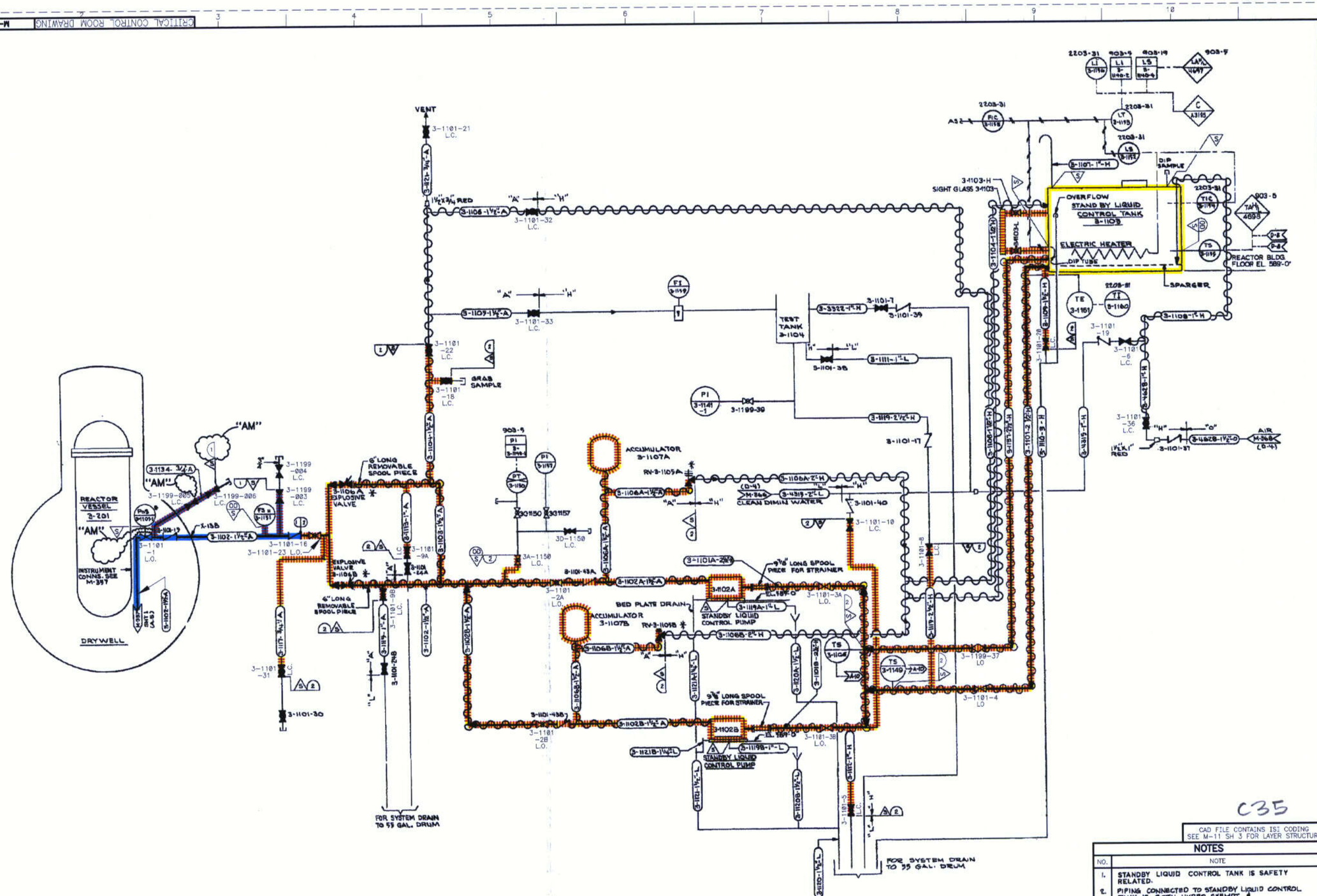

C35

CAD FILE CONTAINS ISI CODING
SEE M-11 SH 3 FOR LAYER STRUCTURE

NOTES

NO.	NOTE
1.	STANDBY LIQUID CONTROL TANK IS SAFETY RELATED.
2.	PIPING CONNECTED TO STANDBY LIQUID CONTROL TANK IS BOTH HYDRO EXEMPT & VOLUMETRIC EXEMPT TO FIRST ISOLATION VALVE.

REV	DATE	DESCRIPTION	PREP.	REVR.	APPR.
AM	08/23/82	FOR RECORD PER EC DCR 0000338333 (UPDATED ISI INFORMATION).	RHB	POS	MN

Exelon. Nuclear
Dresden Station 2 & Units 3

NUCLEAR SAFETY RELATED EQUIPMENT IS SHOWN ON THIS DRAWING

DIAGRAM OF STANDBY LIQUID CONTROL PIPING

SCALE : NONE
DATE : ——
DRAWN BY : ——
DSG. BY : ——

M-364

SHEET NUMBER: SIZE: F

CRITICAL CONTROL ROOM DRAWING

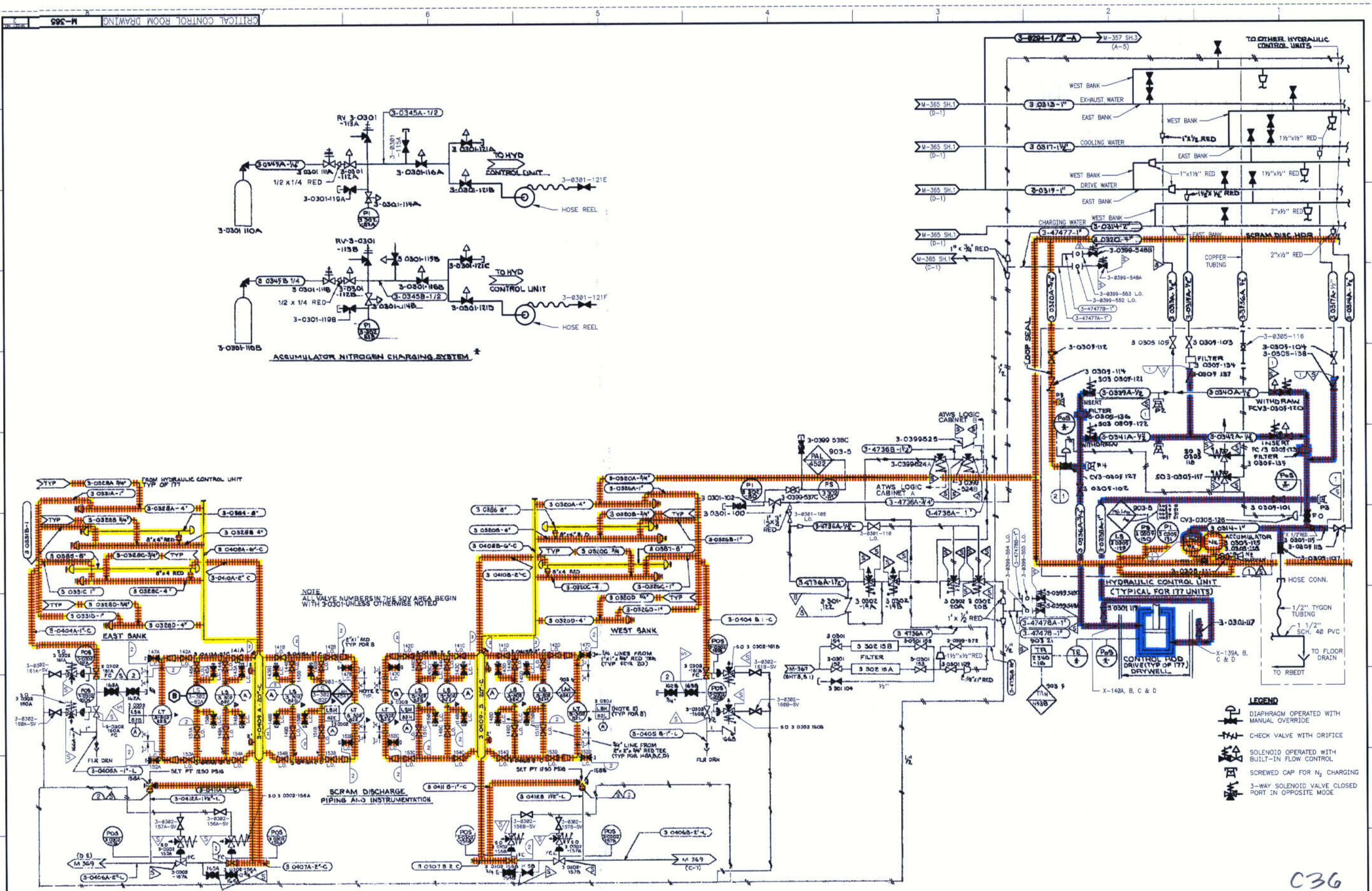

C36

FOR NOTES AND REFERENCE DRAWINGS SEE DWG. M-365 SH.1

CAD FILE CONTAINS ISI CODING SEE M-11 SH 3 FOR LAYER STRUCTURE

REV	DATE	DESCRIPTION	PREP	REVR.	APPR.
N	05/23/92	FOR RECORD PER EC DCN 00003383 33 (UPDATED ISI INFORMATION)	RHB	POS	MM

DIAGRAM OF CONTROL ROD DRIVE HYDRAULIC PIPING

Exelon. Nuclear — Dresden Station 2 & Units 3

NUCLEAR SAFETY RELATED EQUIPMENT IS SHOWN ON THIS DRAWING

SCALE: NONE
DATE: — —
DRAWN BY: — —
ORG. BY: CSGZ

M-365

SHEET NUMBER: 2 SIZE: E

THIS DWG. SUPERSEDES DWG. M-365 REV. AAT, DATED 9/28/94

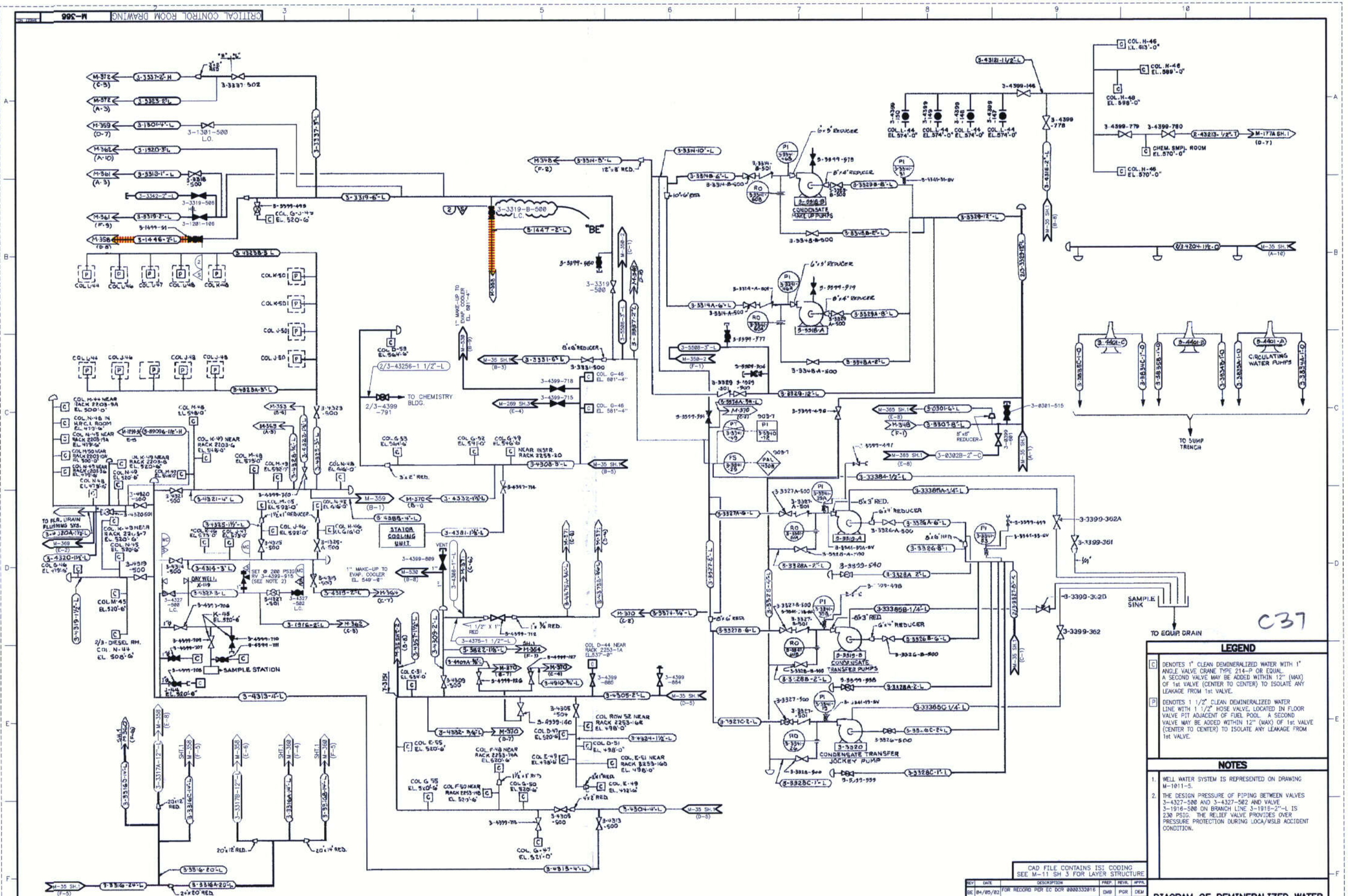
CONDENSATE MAKE UP PUMPS
CONDENSATE TRANSFER PUMPS
CONDENSATE TRANSFER JOCKEY PUMP
CIRCULATING WATER PUMPS
TO SUMP TRENCH
SAMPLE SINK
TO EQUIP DRAIN
SAMPLE STATION
STATOR COOLING UNIT
TO CHEMISTRY BLDG.
TO FLR. DRAIN FLUSHING SYS.
DRY WELL X-119
2/3-DIESEL RM. COL. N-46 EL. 506'-6"
1" MAKE-UP TO EVAP. COOLER EL. 549'-8"
1" MAKE-UP TO EVAP. COOLER EL. 581'-4"
CHEM. SMPL. ROOM EL. 570'-0"
NEAR INSTR. RACK 2253-20
COL. H-46 EL. 613'-0"
COL. H-46 EL. 589'-0"
COL. H-46 EL. 598'-0"
COL. H-46 EL. 570'-0"
COL. L-44 EL. 574'-0"
COL. G-46 EL. 581'-4"
COL. G-47 EL. 521'-0"
COL. D-53 EL. 564'-6"
COL. G-53 EL. 564'-6"
COL. G-52 EL. 541'-0"
COL. G-49 EL. 546'-6"
COL. M-48 EL. 548'-0"
COL. M-49 EL. 592'-0"
COL. N-48 EL. 446'-0"
COL. N-49 EL. 520'-6"
COL. N-45 EL. 520'-6"
COL. M-45 EL. 520'-6"
COL. G-46 EL. 479'-6"
COL. D-51 EL. 564'-0"
COL. E-55 EL. 520'-6"
COL. D-47 EL. 520'-6"
COL. D-51 EL. 498'-0"
COL. E-49 EL. 498'-6"
COL. E-51 NEAR RACK 2253-16B EL. 498'-0"
COL. E-49 EL. 498'-6"
COL. G-55 EL. 520'-6"
COL. F-50 NEAR RACK 2253-16B EL. 520'-6"
COL. G-50 EL. 520'-6"
COL. F-48 NEAR RACK 2253-16A EL. 520'-6"
COL. R-50 NEAR RACK 2253-16B EL. 498'-0"
COL. M-44 NEAR RACK 2203-9A EL. 500'-0"
COL. N-48 IN H.R.C.I. ROOM EL. 479'-6"
COL. N-45 NEAR RACK 2203-19A EL. 479'-6"
COL. N-50 NEAR RACK 2203-9A EL. 500'-0"
COL. N-49 NEAR RACK 2203-9A EL. 479'-6"
COL. N-49 NEAR RACK 2203-9A EL. 520'-6"
COL. N-48 EL. 479'-6"
COL. K-49 NEAR RACK 2203-6 EL. 520'-6"
COL. K-49 NEAR RACK 2203-6 EL. 548'-0"
COL. M-48 EL. 575'-0"
COL. M-49 EL. 592'-0"
COL. N-48 EL. 446'-0"
COL. G-46 EL. 479'-6"
COL. M-45 EL. 520'-6"
COL. K-45 EL. 520'-6"
COL. K-50
COL. K-51
COL. J-51
COL. J-50
COL. L-44
COL. L-46
COL. L-47
COL. L-48
COL. K-48
COL. J-44
COL. J-46
COL. J-48
COL. J-45
"BE"
12"x8" RED.
6"x5" REDUCER
8"x4" REDUCER
6"x6" REDUCER
8"x6" REDUCER
20"x18" RED.
24"x20" RED.
SET @ 200 PSIG (MC) RV 3-4399-915 (SEE NOTE 2)
CAD FILE CONTAINS ISI CODING
SEE M-11 SH 3 FOR LAYER STRUCTURE
LEGEND
C DENOTES 1" CLEAN DEMINERALIZED WATER WITH 1" ANGLE VALVE CRANE TYPE 214-P OR EQUAL. A SECOND VALVE MAY BE ADDED WITHIN 12" (MAX) OF 1st VALVE (CENTER TO CENTER) TO ISOLATE ANY LEAKAGE FROM 1st VALVE.
P DENOTES 1 1/2" CLEAN DEMINERALIZED WATER LINE WITH 1 1/2" HOSE VALVE, LOCATED IN FLOOR VALVE PIT ADJACENT OF FUEL POOL. A SECOND VALVE MAY BE ADDED WITHIN 12" (MAX) OF 1st VALVE (CENTER TO CENTER) TO ISOLATE ANY LEAKAGE FROM 1st VALVE.
NOTES
1. WELL WATER SYSTEM IS REPRESENTED ON DRAWING M-1011-5.
2. THE DESIGN PRESSURE OF PIPING BETWEEN VALVES 3-4327-500 AND 3-4327-582 AND VALVE 3-1916-500 ON BRANCH LINE 3-1916-2"-L IS 230 PSIG. THE RELIEF VALVE PROVIDES OVER PRESSURE PROTECTION DURING LOCA/MSLB ACCIDENT CONDITION.
REV DATE DESCRIPTION PREP. REVIL. APPR.
SE 04/05/02 FOR RECORD PER EC DCR 0000332016 DMB PGR DEM
Exelon Nuclear
Dresden Station Units 2 & 3
NUCLEAR SAFETY RELATED EQUIPMENT IS SHOWN ON THIS DRAWING
DIAGRAM OF DEMINERALIZED WATER SYSTEM PIPING
M-366
SHEET NUMBER:
SIZE: F
CRITICAL CONTROL ROOM DRAWING
C37

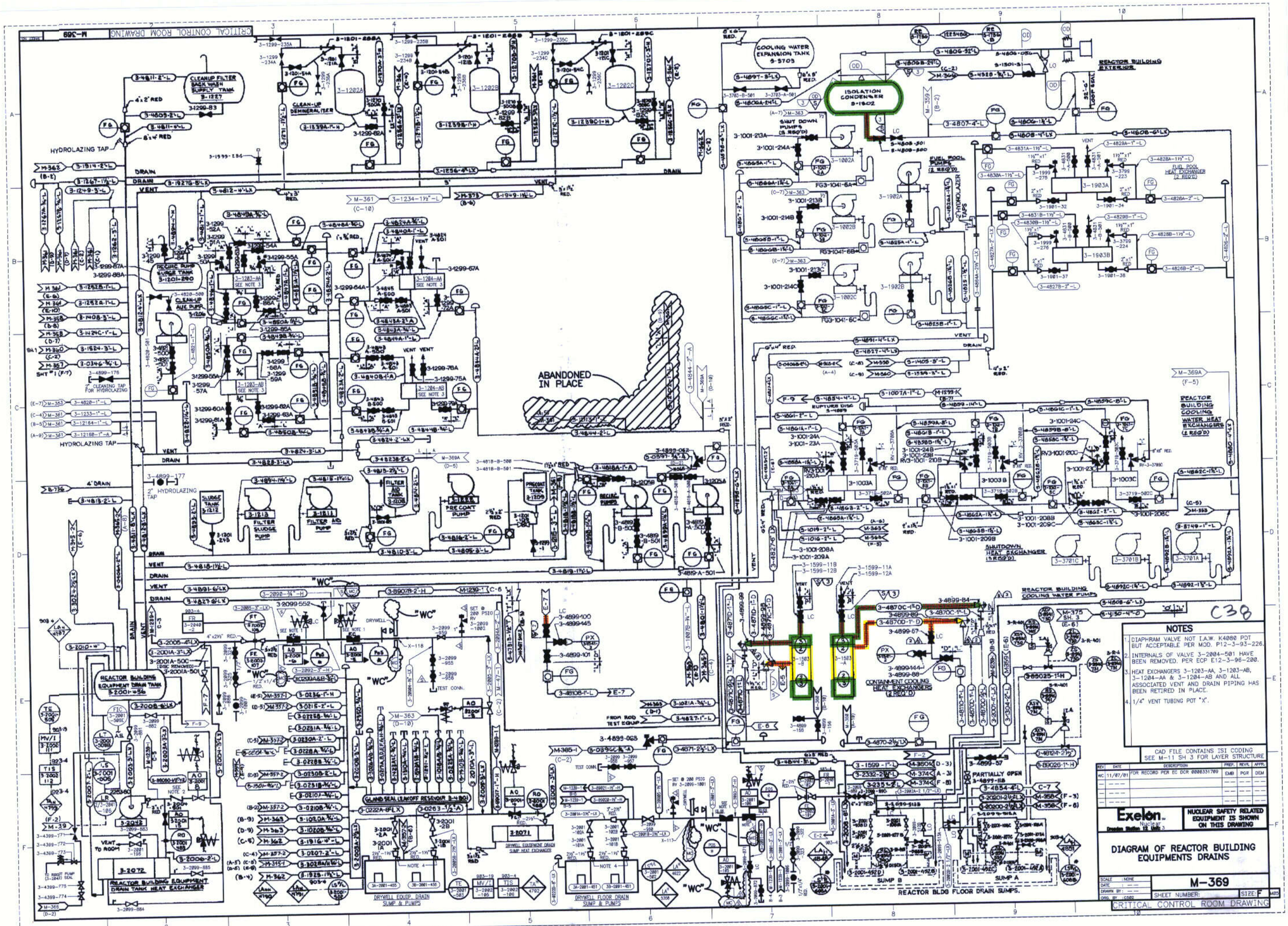
CRITICAL CONTROL ROOM DRAWING
M-369
COOLING WATER EXPANSION TANK 3-5703
ISOLATION CONDENSER 3-1802
CLEANUP FILTER BACK WASH SUPPLY TANK 3-1227
CLEAN-UP DEMINERALIZER
RECIRC PUMP SURGE TANK 3-1201-290
ABANDONED IN PLACE
REACTOR BUILDING EXTERIOR
FUEL POOL PUMPS (2 REQ'D)
FUEL POOL HEAT EXCHANGER (2 REQ'D)
REACTOR BUILDING COOLING WATER HEAT EXCHANGERS (2 REQ'D)
SHUTDOWN HEAT EXCHANGER (5 REQ'D)
REACTOR BUILDING COOLING WATER PUMPS
CONTAINMENT COOLING HEAT EXCHANGERS (2 REQ'D)
REACTOR BUILDING EQUIPMENT DRAIN TANK 3-2001-456
REACTOR BUILDING EQUIPMENT DRAIN TANK HEAT EXCHANGER
DRYWELL EQUIPMENT DRAIN SUMP HEAT EXCHANGER
DRYWELL EQUIP. DRAIN SUMP & PUMPS
DRYWELL FLOOR DRAIN SUMP & PUMPS
REACTOR BLDG FLOOR DRAIN SUMPS.
SUMP A
SUMP B
PARTIALLY OPEN 3-4899-118
FROM ROD TEST EQUIP.
C38
NOTES
1. DIAPHRAM VALVE NOT I.A.W. K4080 POT BUT ACCEPTABLE PER MOD. P12-3-93-226.
2. INTERNALS OF VALVE 3-2004-501 HAVE BEEN REMOVED. PER ECP E12-3-96-280.
3. HEAT EXCHANGERS 3-1203-AA, 3-1203-AB, 3-1204-AA & 3-1204-AB AND ALL ASSOCIATED VENT AND DRAIN PIPING HAS BEEN RETIRED IN PLACE.
4. 1/4" VENT TUBING POT "X".
CAD FILE CONTAINS ISI CODING SEE M-11 SH 3 FOR LAYER STRUCTURE
REV DATE DESCRIPTION PREP. REVIL APPR.
NC 11/07/01 FOR RECORD PER EC DCR 0000331709 EMB PGR DEM
Exelon. Nuclear
Dresden Station Units 2 & 3
NUCLEAR SAFETY RELATED EQUIPMENT IS SHOWN ON THIS DRAWING
DIAGRAM OF REACTOR BUILDING EQUIPMENTS DRAINS
SCALE : NONE
DATE : ---
DRAWN BY : ---
ORIG. BY : 2002
M-369
SHEET NUMBER:
SIZE: F
CRITICAL CONTROL ROOM DRAWING

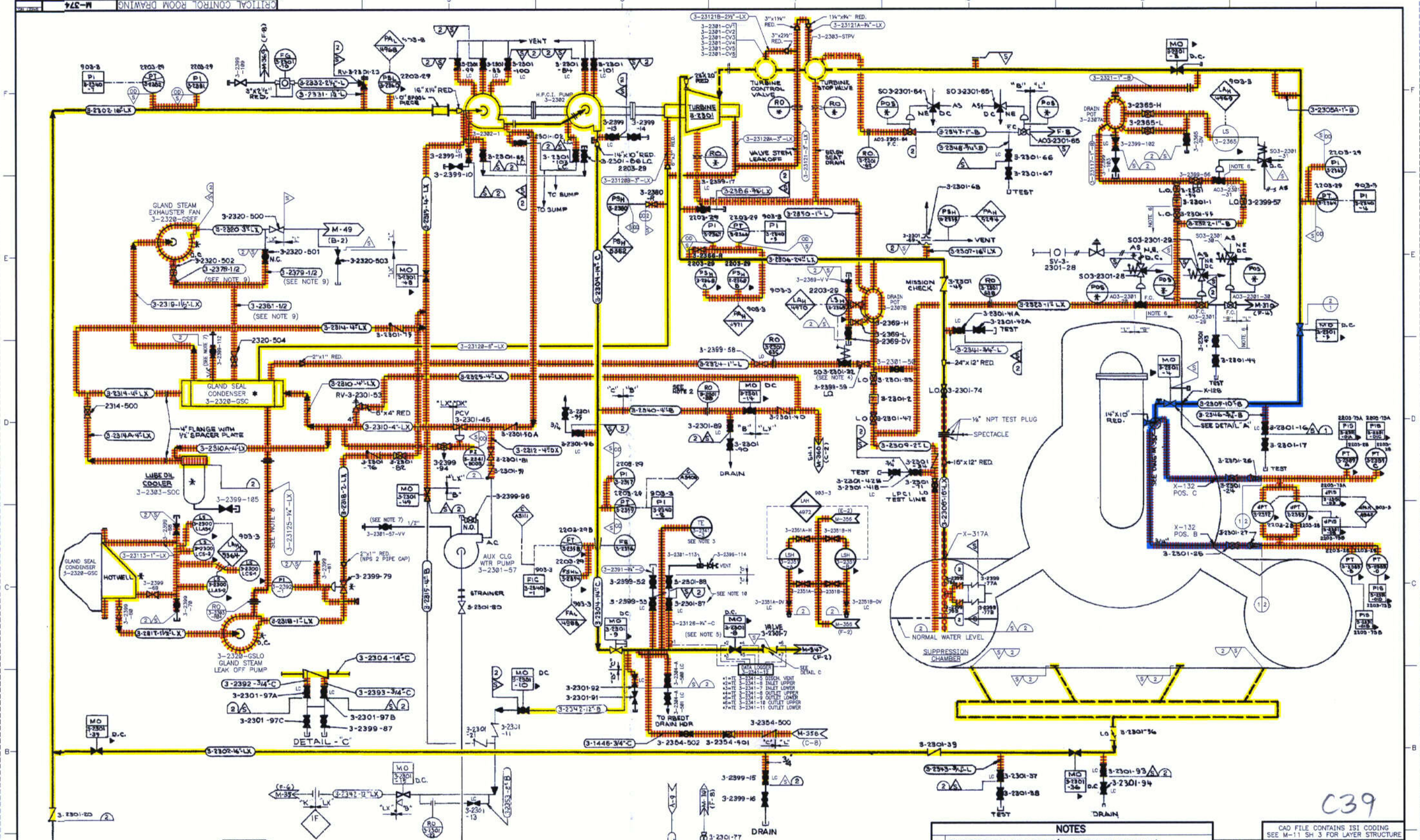

C39

NOTES

1. RADIOGRAPH ALL WELDS (EXCEPT SOCKET WELDS) UNLESS NOTED OTHERWISE BY THE LEGEND SYMBOL △.
2. RO 3-2301-58, IS AN IN-LINE ORIFICE.
3. INSTRUMENT CABLE INSTALLED FROM TE-3-2341-3 TO LOCAL BOX INSTRUMENT JACK FOR REMOTE MONITORING.
4. SOLENOID VALVE 3-2301-32, IS RATED FOR A WORKING PRESSURE OF 5-60 PSI WITH A BURST PRESSURE OF 300 PSI.
5. HOLE HAS BEEN DRILLED IN VALVE DISK ON REACTOR VESSEL SIDE TO PREVENT PRESSURE LOCKING.
6. THE PIPING AND PIPE FITTINGS ARE REPLACED WITH CHROME-MOLY CARBON STEEL PER ALTERNATE REPLACEMENT EVALUATION D-1996-15-1.
7. PIPING INSTALLED HAS THREADED JOINTS TO MATCH THE EQUIPMENT CONNECTIONS INSTEAD OF SOCKET WELD PER PDT LX.
8. PIPING INSTALLED HAS THREADED JOINTS TO MATCH THE EQUIPMENT CONNECTIONS INSTEAD OF SOCKET WELD PER PDT LX. SEE CALCULATION DRE98-0184.
9. STAINLESS STEEL TUBING, 0.049" WALL THICKNESS.
10. VALVES ARE CLASS 800 PER EC333409.

REFERENCE DRAWINGS

ELECTRICAL SCHEMATIC REFERENCE		
12E3492	12E3527	12E3531
12E3493	12E3528	12E3532
12E3494	12E3529	12E3533
12E3526	12E3530	12E7820

CAD FILE CONTAINS ISI CODING SEE M-11 SH 3 FOR LAYER STRUCTURE

REV	DATE	DESCRIPTION	PREP.	REVR.	APPR.
CF	06/05/02	(TOR RECORD PER EC DCR 000330813 (UPDATED ISI INFORMATION)	JHY	RHB	MM
—	— — —		— —	— —	— —
—	— — —		— —	— —	— —
—	— — —		— —	— —	— —

Exelon. Nuclear — Dresden Station Units 2 & 3

NUCLEAR SAFETY RELATED EQUIPMENT IS SHOWN ON THIS DRAWING

DIAGRAM OF HIGH PRESSURE COOLANT INJECTION PIPING

SCALE: NONE
DATE: — —
DRAWN BY: — —
ORIG. BY: 0182

M-374

SHEET NUMBER: SIZE: F

CRITICAL CONTROL ROOM DRAWING

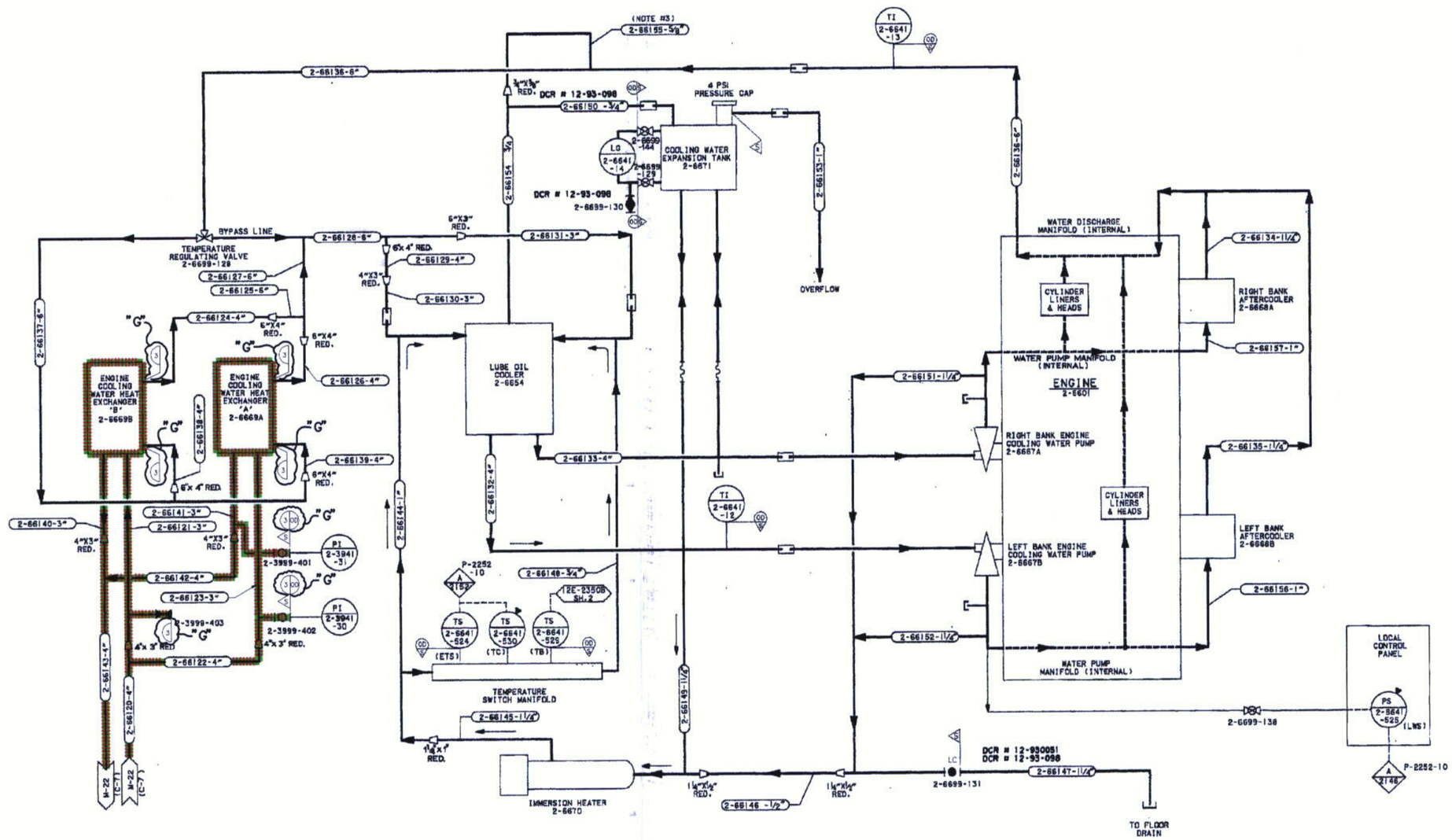

LEGEND

- FLEXIBLE PIPE COUPLING
- MAIN FLOW
- STANDBY HEATING CONVECTION FLOW

NOTES:

1. THIS DWG. HAS BEEN DRAWN BY SARGENT AND LUNDY BASED UPON THE AS INSTALLED CONDITION. SARGENT AND LUNDY IS NOT RESPONSIBLE FOR THE DESIGN SHOWN ON THIS DRAWING.
2. ALL PIPING TO BE IN ACCORDANCE WITH DIESEL ENGINE MANUFACTURERS ASSOCIATION (DEMA)
3. LINE SIZE 5/8" O.D. STEEL TUBING .035" WALL.

C40

"G"

CAD FILE CONTAINS ISI CODING SEE M-11 SH 3 FOR LAYER STRUCTURE

"CRITICAL DRAWING"

DRAWING RELEASE RECORD

REVISION: G	DATE: 01/26/98	SCALE: NONE
DESCRIPTION: FOR RECORD PER DCR 970264		
		DE&S
PREPARED: M. PFILE	REVIEWED: R. BAUMAN	
APPROVED: D. LAMOND	DC: M05	SC: 6600

DIESEL GENERATOR
ENGINE COOLING WATER SYSTEM

ComEd
A Unicom Company

DRESDEN STATION 12
UNIT 2
CHICAGO, ILLINOIS

THIS DRAWING INCLUDES NUCLEAR SAFETY-RELATED EQUIPMENT AND/OR COMPONENTS

DRAWING NUMBER
M-517

SHEET 1

DRAWING NUMBER M-517 SHEET 1

"CRITICAL DRAWING"

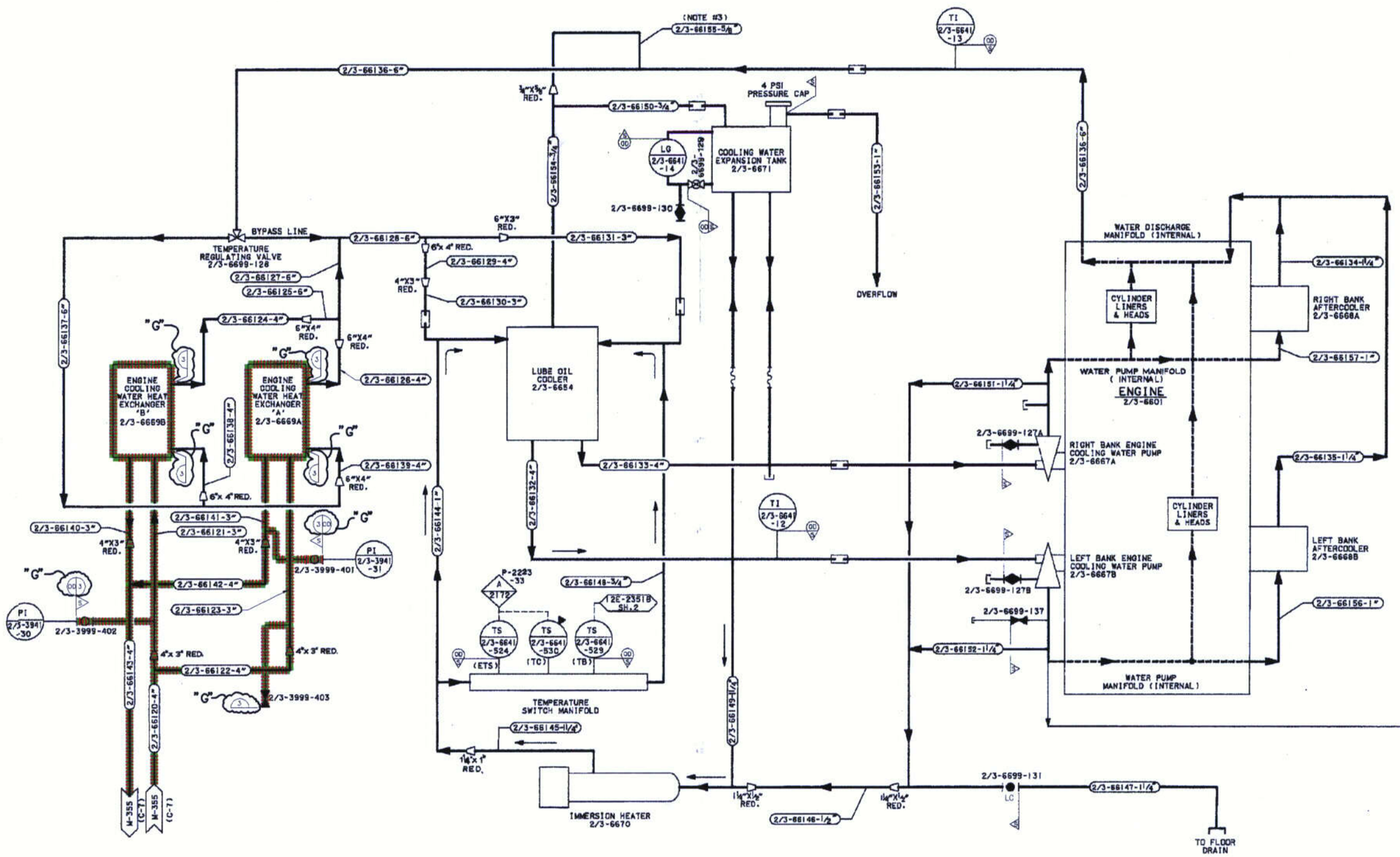

NOTES:

1. THIS DWG. HAS BEEN DRAWN BY SARGENT AND LUNDY BASED UPON THE AS INSTALLED CONDITION. SARGENT AND LUNDY IS NOT RESPONSIBLE FOR THE DESIGN SHOWN ON THIS DRAWING.
2. ALL PIPING TO BE IN ACCORDANCE WITH DIESEL ENGINE MANUFACTURERS ASSOCIATION (DEMA)
3. LINE SIZE 5/8" O.D. STEEL TUBING .035" WALL

LEGEND

- FLEXIBLE PIPE COUPLING
- MAIN FLOW
- STANDBY HEATING CONVECTION FLOW

C41

"G"

CAD FILE CONTAINS ISI CODING SEE M-11 SH 3 FOR LAYER STRUCTURE

"CRITICAL DRAWING"

DRAWING RELEASE RECORD		
REVISION: G	DATE: 01/26/98	SCALE: NONE
DESCRIPTION: FOR RECORD PER DCR 970264		
		DE&S
PREPARED: M. PFILE	REVIEWED: R. BAUMAN	
APPROVED: D. LAMOND	DC: M05	SC: 6600

DIESEL GENERATOR ENGINE COOLING WATER SYSTEM

ComEd A Unicom Company

DRESDEN STATION 12 UNITS 2 & 3 CHICAGO, ILLINOIS

THIS DRAWING INCLUDES NUCLEAR SAFETY-RELATED EQUIPMENT AND/OR COMPONENTS

DRAWING NUMBER M-517

SHEET 2

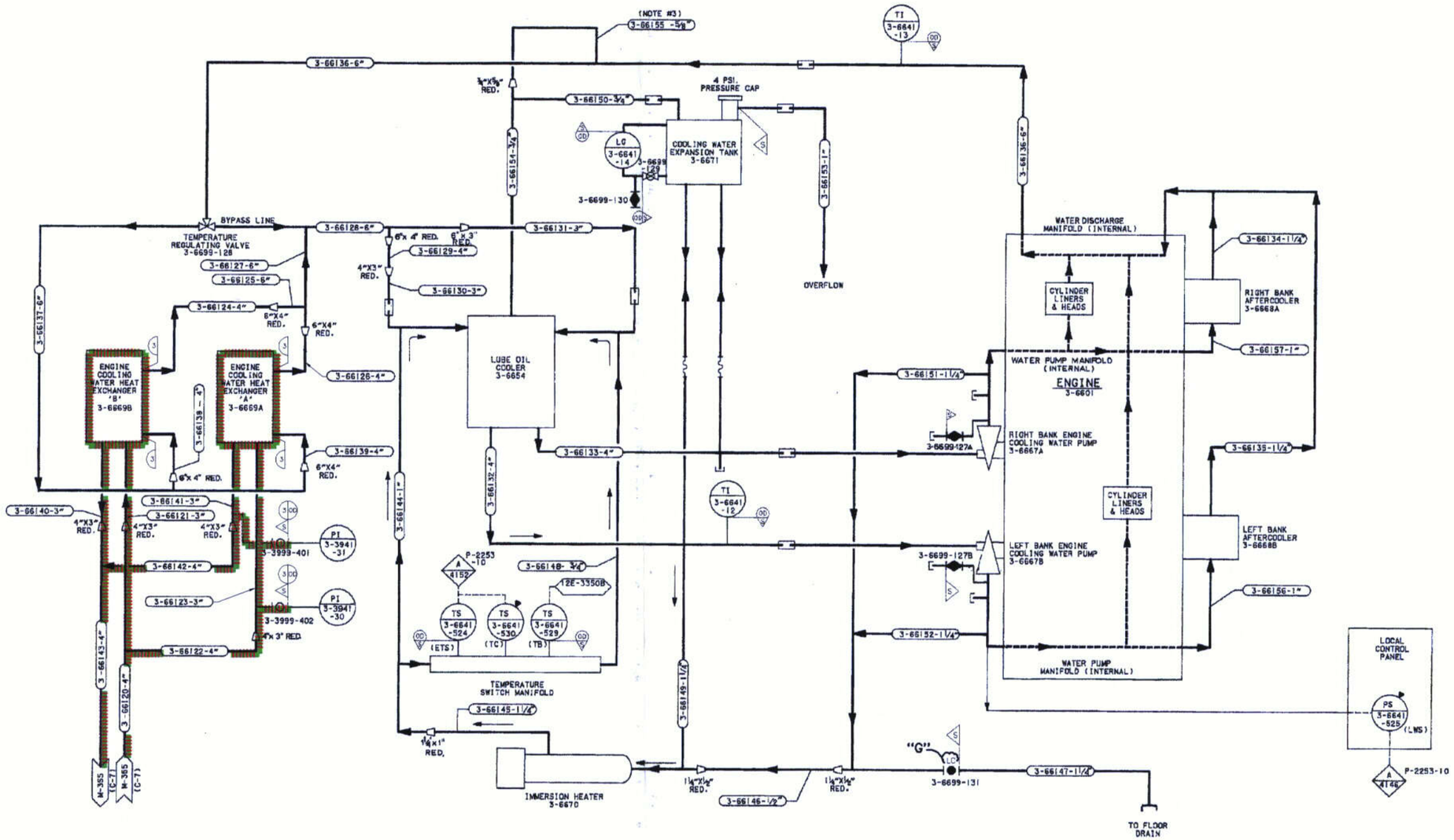

LEGEND

- FLEXIBLE PIPE COUPLING
- MAIN FLOW
- STANDBY HEATING CONVECTION FLOW

NOTES:

1. THIS DWG. HAS BEEN DRAWN BY SARGENT AND LUNDY BASED UPON THE AS INSTALLED CONDITION. SARGENT AND LUNDY IS NOT RESPONSIBLE FOR THE DESIGN SHOWN ON THIS DRAWING.
2. ALL PIPING TO BE IN ACCORDANCE WITH DIESEL ENGINE MANUFACTURERS ASSOCIATION (DEMA)
3. LINE SIZE 5/8" O.D.STEEL TUBING .035" WALL.

C42

CAD FILE CONTAINS ISI CODING SEE M-11 SH 3 FOR LAYER STRUCTURE

REV	DATE	DESCRIPTION	PREP	REVR.	APPR.
G	01/25/99	FOR RECORD PER DCR 980507	PGR	FMG	MN

ComEd
Chicago, Illinois
Dresden Station #2 Units 3

NUCLEAR SAFETY RELATED EQUIPMENT IS SHOWN ON THIS DRAWING

SCALE: NONE
DATE: — —
DRAWN BY: — —
DES. BY: CORD

DIESEL GENERATOR ENGINE COOLING WATER SYSTEM

M-517

SHEET NUMBER: 3 SIZE: F

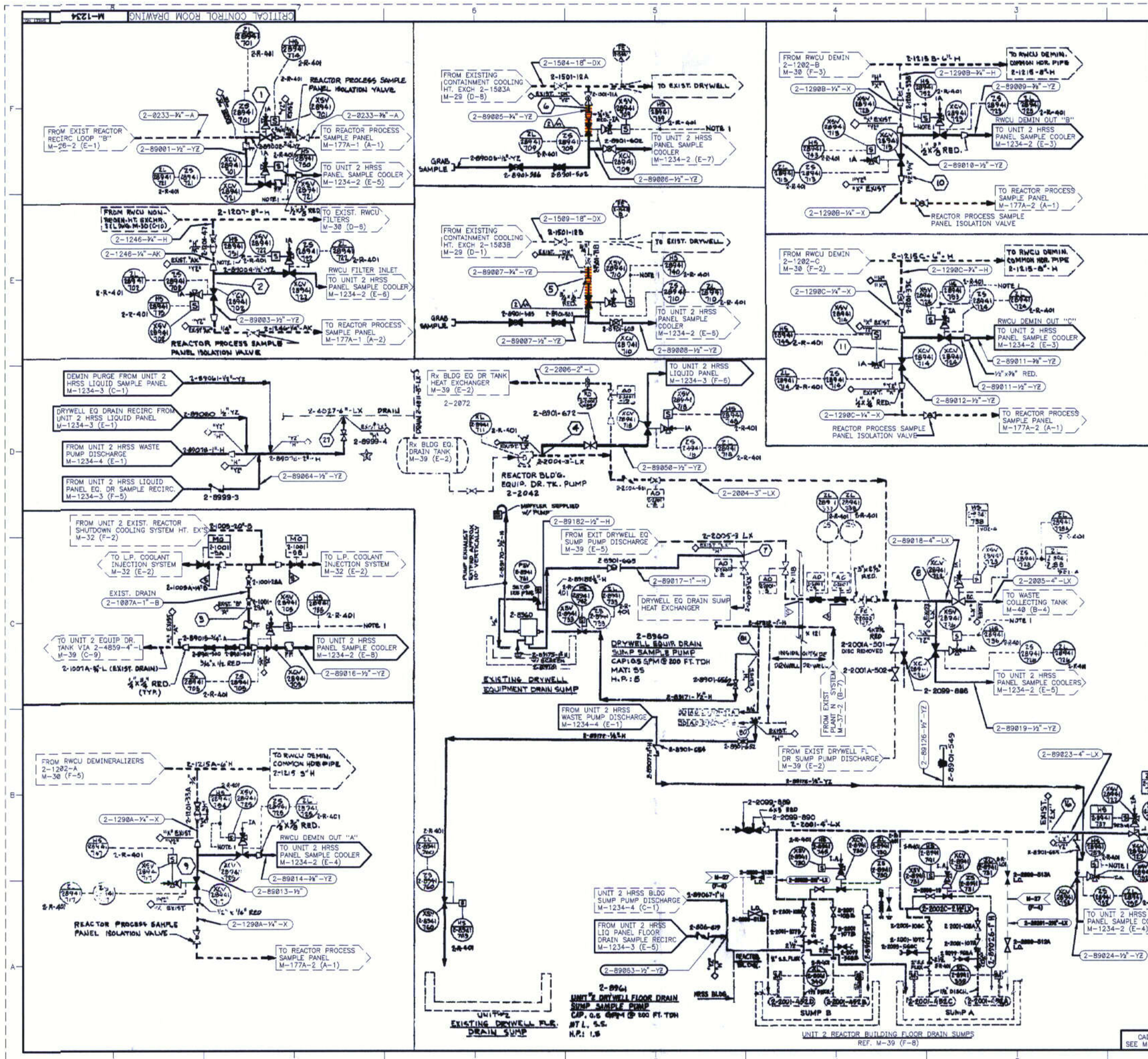

EQUIPMENT LIST

EQUIPMENT NO.	DESCRIPTION	SPECIFICATION NO.
2-8901 THRU 2-8910	SAMPLE COOLERS	5307-M-201
2-8911	HRSS-SAMPLE COOLER RACK	5307-M-201
2-8912	HRSS-LIQUID SAMPLE PANEL	5307-M-201
2-8913, 14, 15, 16, 17 & 18	QUICK DISCONNECT COUPLING	5307-M-201
2-8919	VACUUM PUMPS	5307-M-201
2-8920A	PRESSURIZED SAMPLE BOMB	5307-M-201
2-8920B	DEPRESSURIZATION CHAMBER	5307-M-201
2-8921	EXPANSION VESSEL	5307-M-201
2-8922 AND 2-8923	DILUTER CONTAINERS	5307-M-201
2-8924	BOTTLE SAMPLE SHIELD CASK & CART	5307-M-201
2-8925	ARGON GAS CYLINDER	5307-M-200
2-8945	HRSS WASTE TANK	5307-M-210
2-8946 A 2-8946 B	HRSS WASTE PUMPS	5307-M-209
2-8947	BELLOWS EVACUATING COMPRESSOR	5308-M-217
2-8948	NITROGEN CYLINDER	5308-M-200
2-8955	QUICK DISCONNECT (C.A.P.)	5308-M-201
2-8956,57	PH BUFFER SOLUTION TANKS (C.A.P.)	5308-M-201
2-8958	CHLORIDE CALIBRATION SOLUTION TANK	5308-M-201
2-8959	O_2 SATURATED WATER TANK	5308-M-201
2-8960	DRYWELL EQUIPMENT DRAIN SUMP SAMPLE PUMP	5308-M-216
2-8961	DRYWELL FLOOR DRAIN SUMP SAMPLE PUMP	5308-M-216
2-8962	HRSS BUILDING SUMP PUMP	5308-M-208
2-8963	C.A.P. EDUCTOR	5308-M-201
2-8964	CHEM. ANALYSIS PANEL	5308-M-201
2-8965	CHEM. ANALYSIS SAMPLE PUMP	5308-M-201
2-8967A,B,C,D	140 MICRON SCREEN (4-REQ.) (C.A.P.)	5308-M-201
2-8968 2-8969A,B,C	DI-WATER QUICK DISCONNECT COUPLING	5308-M-200
2-8978	ARGON-GAS MANIFOLD ASSEMBLY	5308-M-200
2-8979	ARGON-PRESSURE REDUCING STATION	5308-M-200
2-8980	N_2-GAS MANIFOLD ASSEMBLY	5308-M-200
2-8981	N_2-PRESSURE REDUCING STATION	5308-M-200

(EQ. LIST CONT. ON SHEET 2)

C43

NOTES

1. INTERLOCK AIR OPERATED SAMPLE ROOT VALVES WITH AIR OPERATED COOLER FLUSH VALVES SUCH THAT COOLER FLUSH VALVES (SHOWN IN DWG 5000, SH. 2) CAN NOT BE OPENED WHEN SAMPLE ROOT VALVES ARE IN OPEN POSITION.
2. FOR ACCURATE PRESENTATION OF THE PROCESS AND FLOW DIAGRAM INSIDE THE PACKAGED EQUIPMENT (i.e., LIQUID SAMPLING PANEL, CHEMICAL ANALYSIS PANEL AND SAMPLE COOLER RACK) REFER TO CERTIFIED VENDOR DRAWINGS.
3. THIS DRAWING IS REPRODUCED FROM NUS DRAWING NUMBER 5308M3000 SHEET 1.

REV	DATE	DESCRIPTION	PREP.	REVR.	APPR.
22	06/05/02	FOR RECORD PER EC DCR 000033813 (UPDATED ISI INFORMATION)	JHY	RHB	MM

Exelon. Dresden Station Unit 2

NUCLEAR SAFETY RELATED EQUIPMENT IS SHOWN ON THIS DRAWING

PIPING & INSTRUMENTATION DIAGRAM LIQUID SAMPLING

SCALE : NONE
DATE : ——
DRAWN BY : ——
ORG. BY : CSBD

M-1234

SHEET NUMBER: 1 SIZE: F

CAD FILE CONTAINS ISI CODING SEE M-11 SH 3 FOR LAYER STRUCTURE

CRITICAL CONTROL ROOM DRAWING

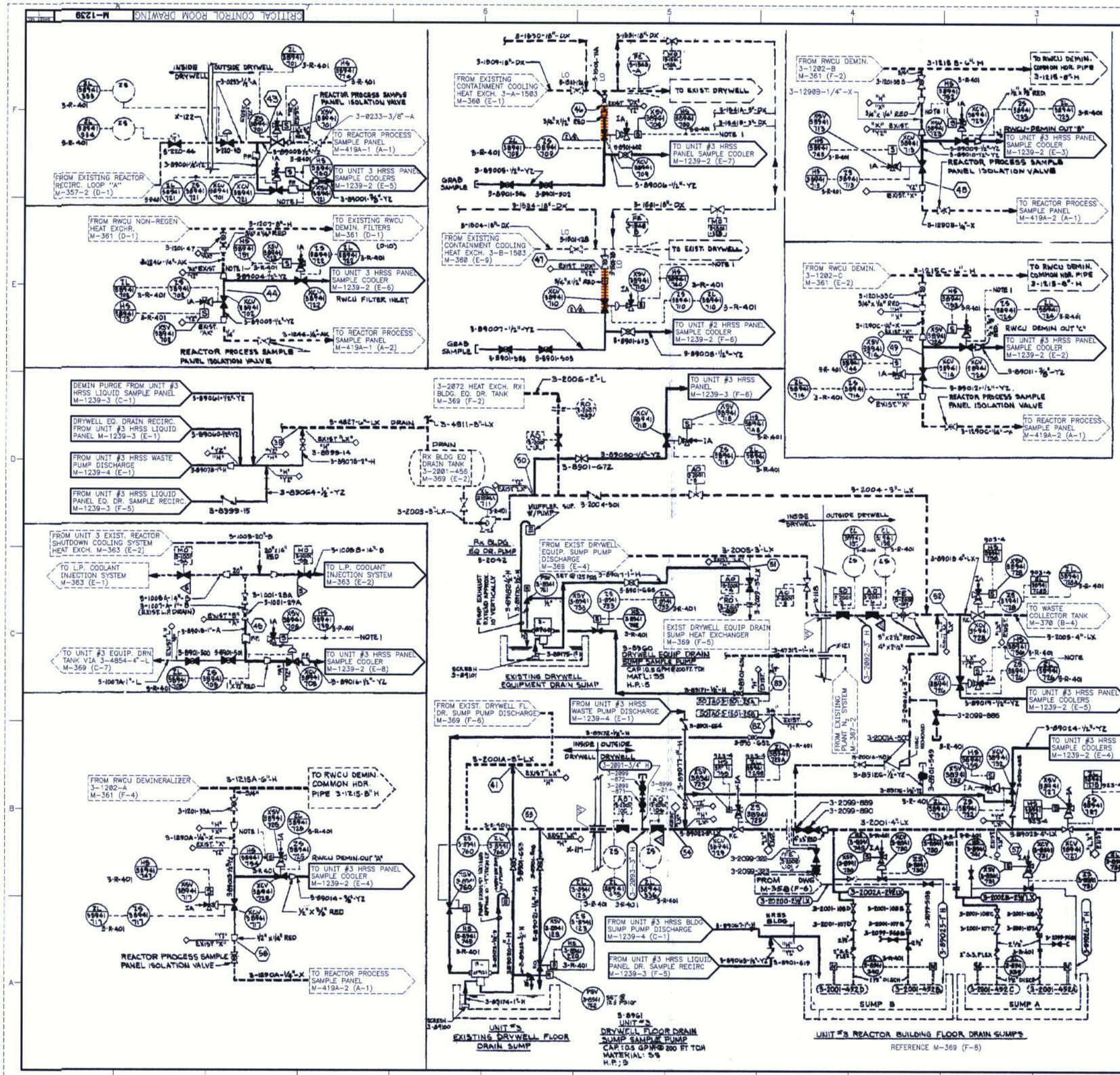

EQUIPMENT LIST (CONT. ON SHT. 2)		
EQUIPMENT NO.	DESCRIPTION	SPECIFICATION NO.
3-8901 THRU 3-8910	SAMPLE COOLERS	8307-M-201
3-8911	HRSS-SAMPLE COOLER RACK	
3-8912	HRSS-LIQUID SAMPLE PANEL	
3-8913, 14, 15, 16, 17 AND 18	QUICK DISCONNECT COUPLING (6 REQ'D)	
3-8919	VACUUM PUMPS	
3-8920A	PRESSURIZED SAMPLE BOMB	
3-8920B	DEPRESSURIZATION CHAMBER	
3-8921	EXPANSION VESSEL	
3-8922 AND 3-8923	DILUTER CONTAINERS	
3-8924	BOTTLE SAMPLE SHIELD CASK & CART	
3-8925	ARGON GAS CYLINDER ASSEMBLY	8307-M-200
3-8945	HRSS WASTE TANK	8307-M-210
3-8946A & 3-8946B	HRSS WASTE PUMP A & PUMP B	8307-M-209
3-8947	BELLOWS EVACUATING COMPRESSOR	8308-M-217
3-8948	NITROGEN CYLINDER	8308-M-200
3-8955	QUICK DISCONNECT COUPLING C.A.P.	8307-M-201
3-8956 AND 3-8957	PH BUFFER SOLUTION TANK C.A.P.	
3-8958	CHLORIDE CALIBRATION SOLUTION TANK	
3-8959	O_2 SATURATED WATER TANK	
3-8960	DRYWELL EQUIPMENT DRAIN SUMP SAMPLE PUMP	8308-M-216
3-8961	DRYWELL FLOOR DRAIN SUMP SAMPLE PUMP	
3-8962	HRSS BUILDING SUMP PUMP	8308-M-208
3-8963	C.A.P.-EDUCTOR	
3-8964	CHEM. ANALYSIS PANEL	8308-M-201
3-8965	CHEM. ANALYSIS SAMPLE PUMP	8308-M-201
3-8967A, B, C, D	140 MICRON SCREEN (4 REQ'D) C.A.P.	8308-M-201
3-8968 AND 3-8969A, B, C	DI-WATER QUICK DISCONNECT COUPLING	8308-M-200
3-8978	ARGON-GAS MANIFOLD ASSEMBLY	8308-M-200
3-8979	ARGON-PRESSURE REDUCING STATION	8308-M-200
3-8980	N_2 GAS MANIFOLD ASSEMBLY	8308-M-200
3-8981	N_2 PRESSURE REDUCING STATION	8308-M-200

C44

NOTES

1. INTERLOCK AIR OPERATED SAMPLE ROOT VALVES WITH AIR OPERATED COOLER FLUSH VALVES SUCH THAT COOLER FLUSH VALVES (SHOWN IN DWG 3000, SH. 2) CAN NOT BE OPENED WHEN SAMPLE ROOT VALVES ARE IN OPEN POSITION.
2. FOR ACCURATE PRESENTATION OF THE PROCESS AND FLOW DIAGRAM IN 9108 THE PACKAGED EQUIPMENT (I.E., LIQUID SAMPLING PANEL, CHEMICAL ANALYSIS PANEL, AND SAMPLE COOLER RACK) REFER TO CERTIFIED VENDOR DRAWINGS.

REV	DATE	DESCRIPTION	PREP.	REVIL	APPR.
22	06/05/02	FOR RECORD PER EC DCR 00003368 13 (UPDATED TSC INFORMATION)	JHY	RHB	MM

Exelon. Nuclear — Dresden Station Units 2 & 3

NUCLEAR SAFETY RELATED EQUIPMENT IS SHOWN ON THIS DRAWING

PIPING & INSTRUMENTATION DIAGRAM LIQUID SAMPLING

DRAWING NUMBERS REFERRED TO IN THIS DRAWING ARE NUS DRAWING NUMBERS.

CAD FILE CONTAINS ISI CODING SEE M-11 SH 3 FOR LAYER STRUCTURE

SCALE: NONE | DATE: | DRAWN BY: | ORIG. BY: CSRD

M-1239

SHEET NUMBER: 1 | SIZE: F

CRITICAL CONTROL ROOM DRAWING

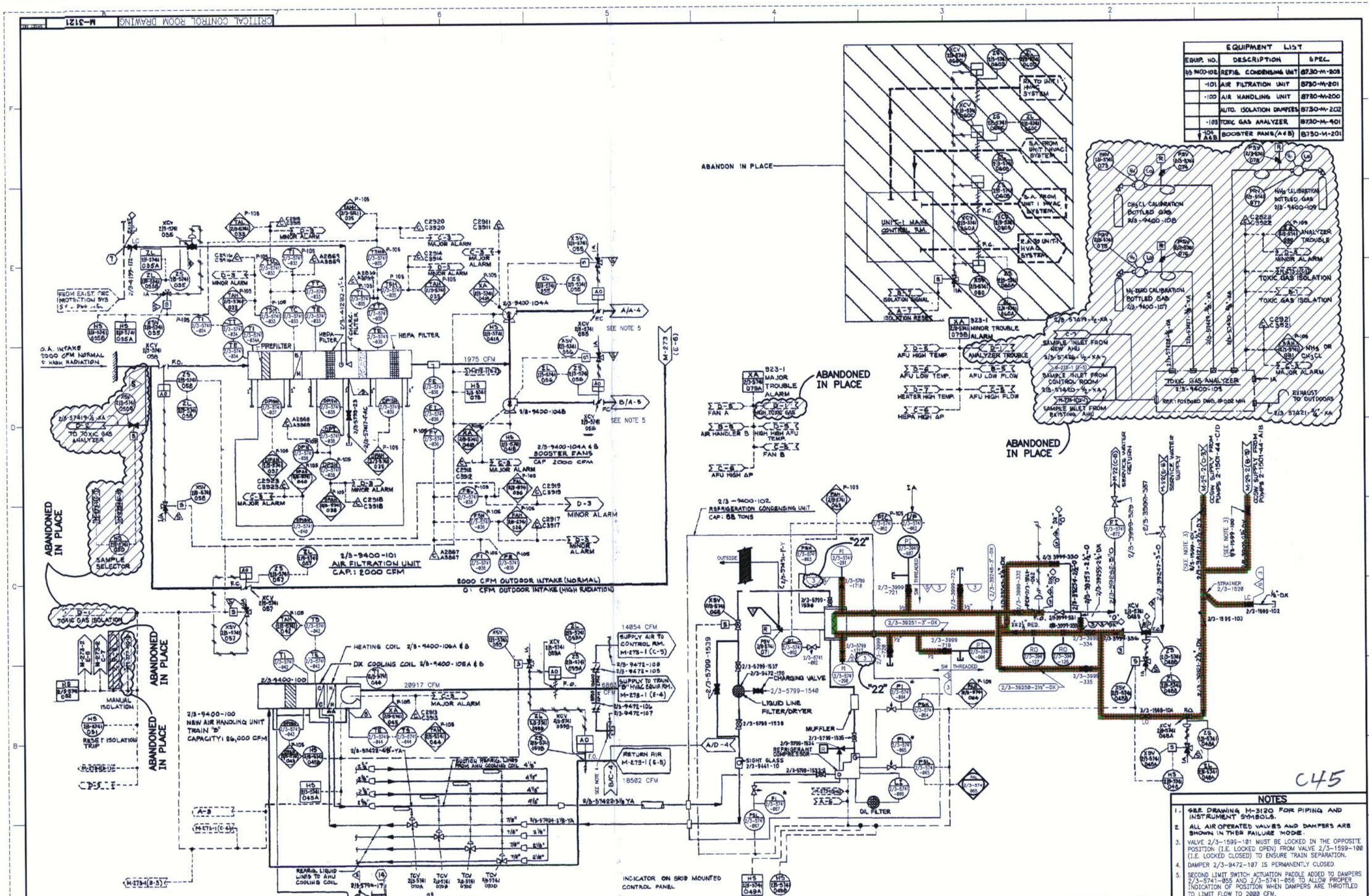

EQUIPMENT LIST		
EQUIP. NO.	DESCRIPTION	SPEC.
2/3-9400-102	REFRIG. CONDENSING UNIT	8730-M-208
-101	AIR FILTRATION UNIT	8730-M-201
-100	AIR HANDLING UNIT	8730-M-200
	AUTO. ISOLATION DAMPERS	8730-M-202
-103	TOXIC GAS ANALYZER	8730-M-401
-104 A&B	BOOSTER FANS (A & B)	8730-M-201

NOTES

1. SEE DRAWING M-3120 FOR PIPING AND INSTRUMENT SYMBOLS.
2. ALL AIR OPERATED VALVES AND DAMPERS ARE SHOWN IN THEIR FAILURE MODE.
3. VALVE 2/3-1599-101 MUST BE LOCKED IN THE OPPOSITE POSITION (I.E. LOCKED OPEN) FROM VALVE 2/3-1599-100 (I.E. LOCKED CLOSED) TO ENSURE TRAIN SEPARATION.
4. DAMPER 2/3-9472-107 IS PERMANENTLY CLOSED.
5. SECOND LIMIT SWITCH ACTUATION PADDLE ADDED TO DAMPERS 2/3-5741-055 AND 2/3-5741-056 TO ALLOW PROPER INDICATION OF POSITION WHEN DAMPERS ARE THROTTLED TO LIMIT FLOW TO 2000 CFM.

REV	DATE	DESCRIPTION	PREP	REVR	APPR
22	06/05/02	FOR RECORD PER EC DCR 00003368813 (UPDATED ISI INFORMATION)	JHY	RHB	MM

CAD FILE CONTAINS ISI CODING SEE M-11 SH 3 FOR LAYER STRUCTURE

Exelon. Nuclear — Dresden Station 2 & Units 2&3

NUCLEAR SAFETY RELATED EQUIPMENT IS SHOWN ON THIS DRAWING

PIPING & INSTRUMENT DIAGRAM CONTROL ROOM HVAC

SCALE: NONE
DATE: ---
DRAWN BY: ---
CHKD BY: ---

M-3121

SHEET NUMBER: SIZE: F

CRITICAL CONTROL ROOM DRAWING

Attachment D

3rd Interval Relief Request	4th Interval Relief Request	Description
CR-01	I4R-01	Inspection of Standby Liquid Control nozzle inner radius. Similar to relief request previously granted for Dresden 3rd Interval ISI program. Reference letter from J. F. Stang (USNRC) to D. L. Farrar (Exelon) dated May 19, 1994.
CR-21	I4R-02	Alternate Risk-Informed Selection and Examination Criteria for Category B-F, B-J, C-F-1, and C-F-2 Pressure Retaining Piping Welds. Similar to relief request previously authorized for Dresden 3rd Interval ISI program. Reference letter from A. J. Mendiola (USNRC) to O. D. Kingsley (Exelon) dated September 5, 2001.
CR-22	I4R-03	Alternative Requirements to ASME Section XI, 1995 Edition with 1996 Addenda, Appendix VII, Subsubarticle VII-240, "Annual Training". Similar to relief request previously authorized for Dresden 3rd Interval ISI program. Reference letter from A. J. Mendiola (USNRC) to O. D. Kingsley (Exelon) dated October 22, 2001.
CR-23	I4R-04	Alternative Requirements to Appendix VIII, Supplement 4, "Qualification Requirements for the Clad/Base Metal Interface of Reactor Pressure Vessel". Similar to relief request previously authorized for Dresden 3rd Interval ISI program. Reference letter from A. J. Mendiola (USNRC) to O. D. Kingsley (Exelon) dated October 22, 2001.
PR-03	I4R-05	Exemption from pressure testing Reactor Pressure Vessel Head Flange Seal Leak Detection System. Similar to relief request previously granted for Dresden 3rd Interval ISI program. Reference letter from J. F. Stang (USNRC) to D. L. Farrar (Exelon) dated May 19, 1994.
PR-05	I4R-06	Testing Frequency for Isolation Condenser Shell Side and Vent Piping Similar to relief request previously granted for Dresden 3rd Interval ISI program. Reference letter from J. F. Stang (USNRC) to D. L. Farrar (Exelon) dated May 19, 1994.

Attachment D

3rd Interval Relief Request	4th Interval Relief Request	Description
N/A	I4R-07	Continuous Pressure Monitoring of the Control Rod Drive (CRD) System Accumulators. Similar to relief request previously authorized for Quad Cities 3rd Interval ISI program. Reference letter from A. J. Mendiola (USNRC) to O. D. Kingsley (Exelon) dated August 22, 2000.
N/A	I4R-08	Pressure Retaining Welds in Piping Subject to Appendix VIII, Supplement 11. Similar to relief request previously authorized for Quad Cities 3rd Interval ISI program. Reference letter from A. J. Mendiola (USNRC) to O. D. Kingsley (Exelon) dated February 21, 2002.
N/A	I4R-09	Alternative Rules for Corrective Measures if Leakage Occurs at Bolted Connections Adopts the provisions of Code Case N-566-2 not yet incorporated into Regulatory Guide 1.147.
N/A	I4R-11	Evaluation Criteria for Temporary Acceptance of Flaws. Adopts the provisions of Code Case N-513-1 not yet incorporated into Regulatory Guide 1.147.