New York State Department of Environmental Conservation
Executive

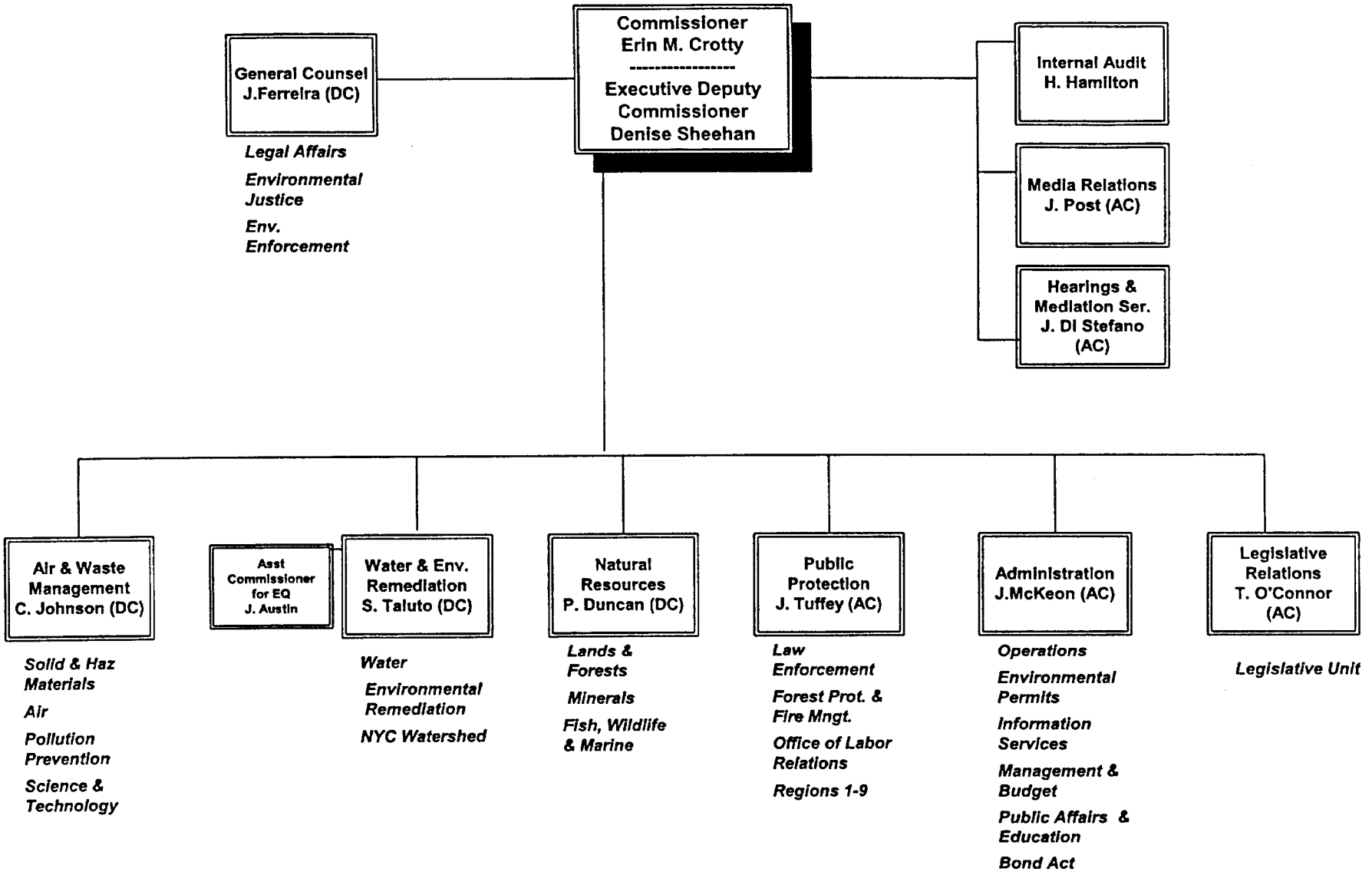

4/2/02

NEW YORK STATE DEPARTMENT OF ENVIRONMENTAL CONSERVATION

DIVISION OF SOLID & HAZARDOUS MATERIALS

March 13, 2002

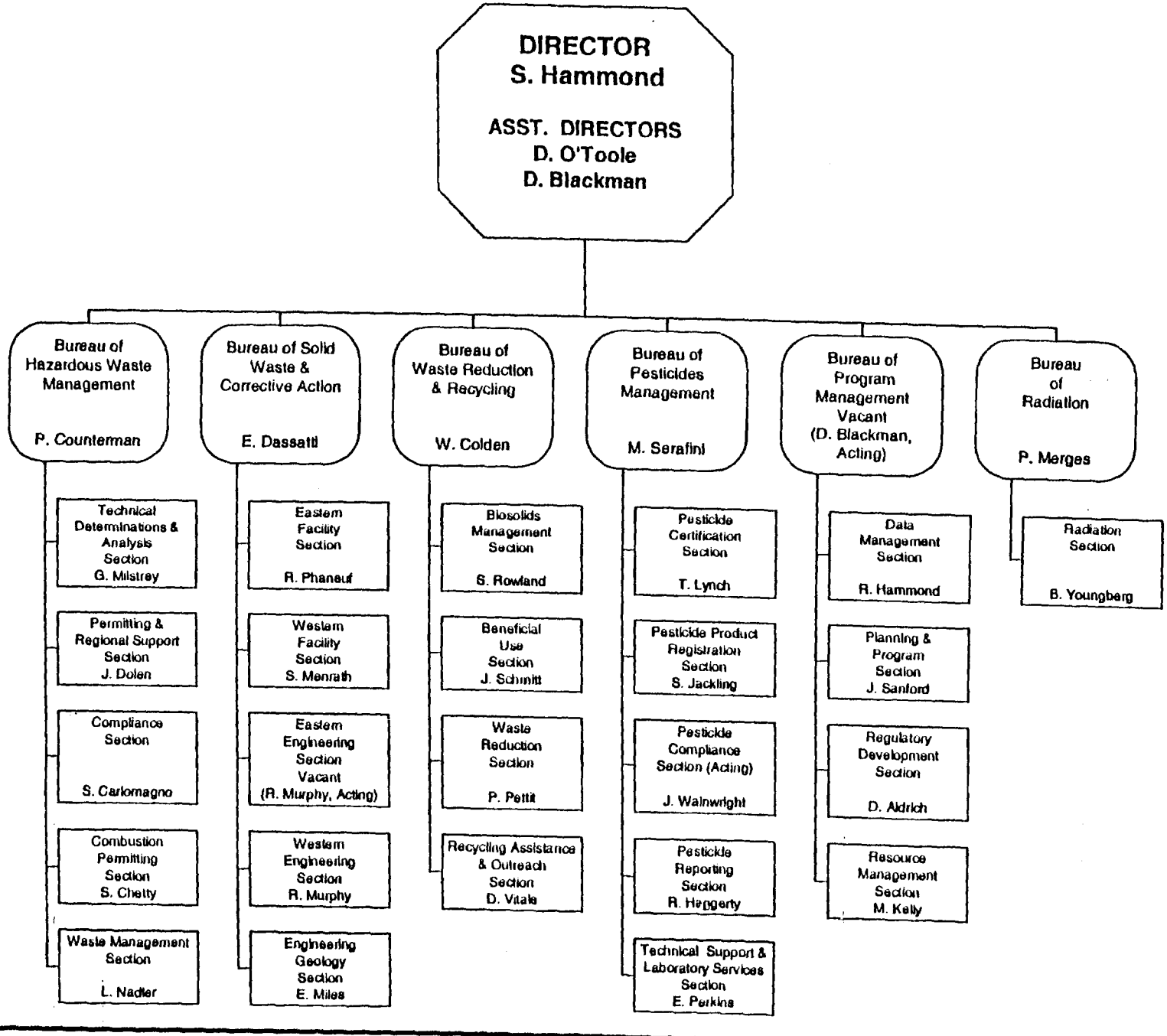

DIVISION OF SOLID & HAZARDOUS MATERIALS

BUREAU OF RADIATION

March 13, 2002

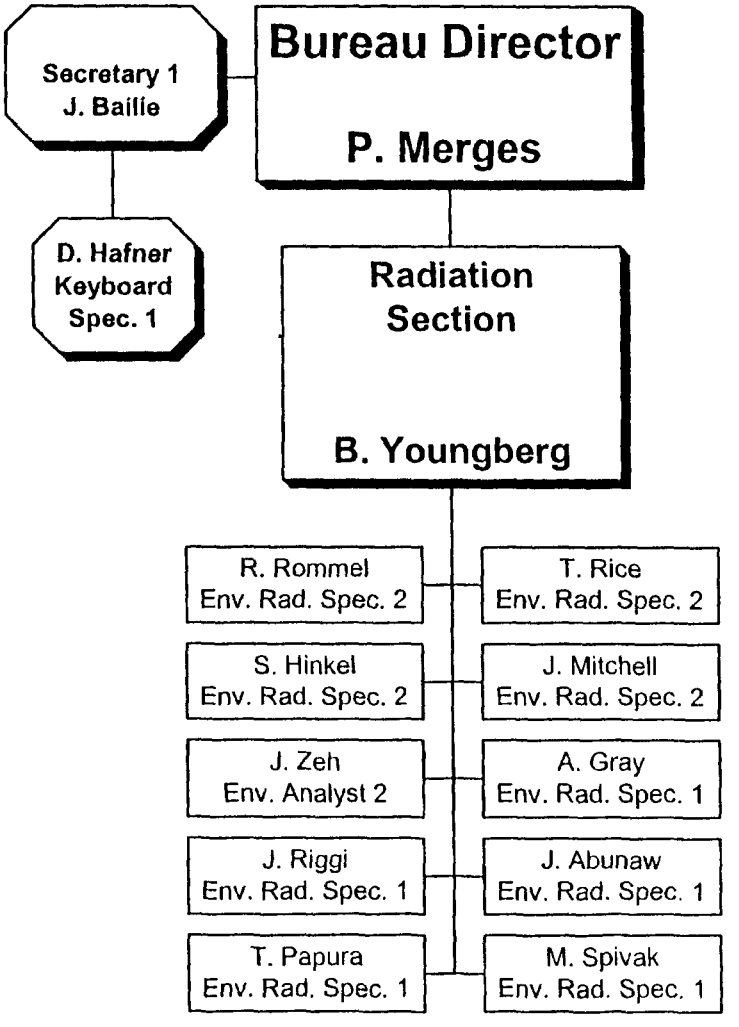

Bureau of Radiation
7/23/02

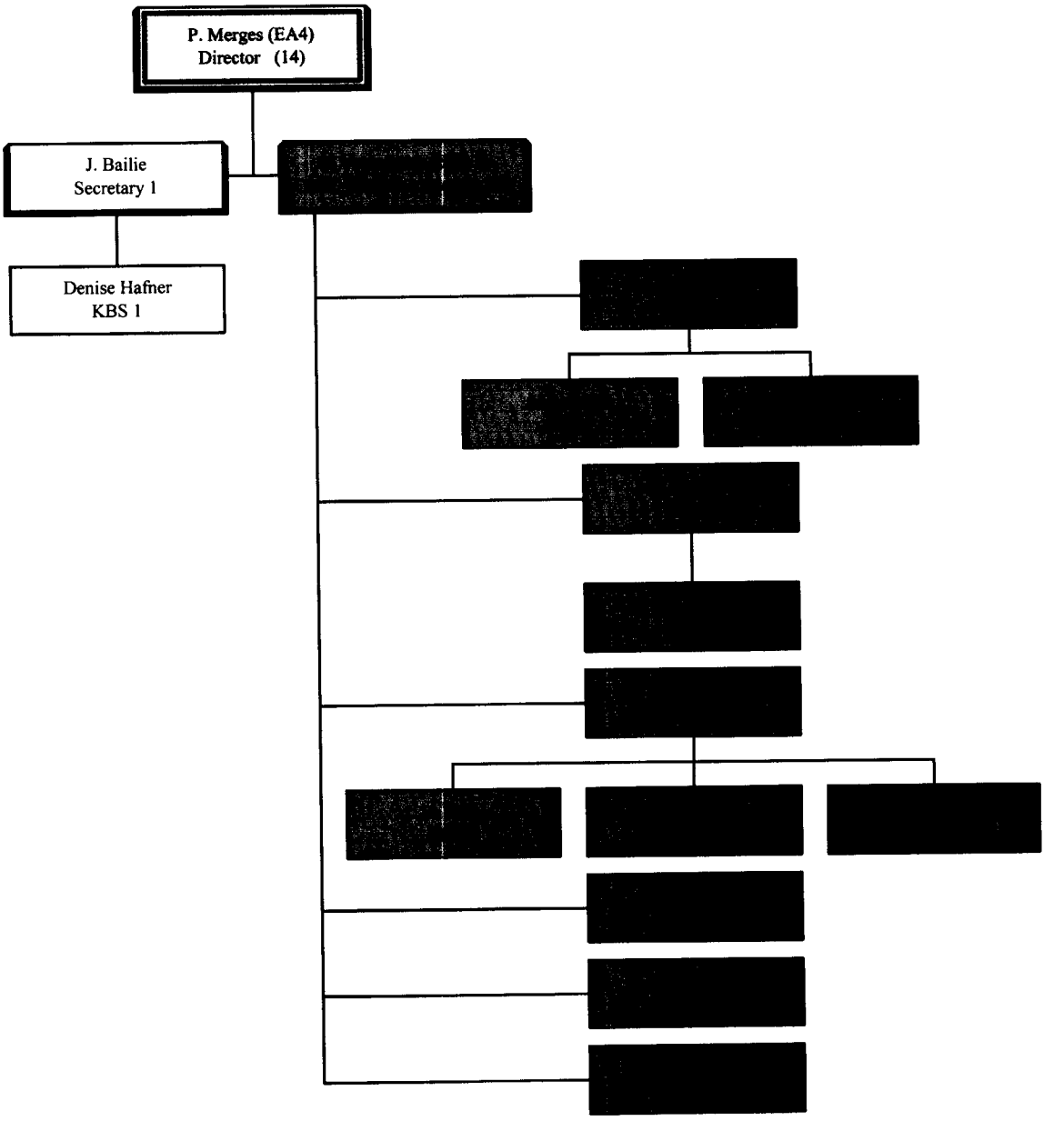

KEY:
EPS - Environmental Program Specialist
ERS - Environmental Radiation Specialist
KBS - Keyboard Specialist