NMC
Committed to Nuclear Excellence

DAEC EMERGENCY PLANNING DEPARTMENT PROCEDURE TRANSMITTAL ACKNOWLEDGEMENT MEMO (TAM-41)

To: NRC-NRR Document Control Desk
US NRC
Washington DC 20555

Re: Entire EPIP Document (Copy 28)

PSM Title: n/a

Distribution Date: 08 / 08 / 2002
Effective Date of Change: 08 / 15 / 2002
Return by: 08 / 29 / 2002

Please perform the following to your assigned manual. If you have any questions regarding this TAM please contact Don A. Johnson at 319-851-7872.

	REMOVE	INSERT
EPIP ~~MASTER~~ TOC (PWR: -)	Rev. 126	Rev. 127
EPIP EAL-04 (PWR: 17651)	Rev. 1	Rev. 2
EPIP EAL-03 (PWR: 17649)	Rev. 1	Rev. 2
EPIP EAL-02 (PWR: 17647)	Rev. 1	Rev. 2
EPIP EAL-01 (PWR: 17646)	Rev. 1	Rev. 2

- Discard the Table of Contents for the EPIP Forms @ back of book as it has been combined with the TOC at the front. DJ

PERFORMED BY:

Print Name _____ Sign Name _____ Date _____

Please return to: K. Dunlap
PSC/Emergency Planning
3313 DAEC Rd.
Palo, IA 52324

To be completed by DAEC EP personnel only:
Date TAM returned: _____
EPTools updated: _____

A045

Procedure	Title	Revision Number	Date
1.1	Determination of Emergency Action Levels	19	09/12/01
1.2	Notification	26	08/24/01
1.3	Plant Assembly and Site Evacuation	9	09/12/01
1.4	Release of Emergency-Related Information	3	09/12/01
1.5	Activation and Operation of the EOF	3	10/16/00
2.1	Activation and Operation of the OSC	13	09/12/01
2.2	Activation and Operation of the TSC	22	02/22/02
2.3	Operation of the FTS-2001 Phone Network	5	09/12/01
2.4	Activation and Operation of the ORAA	8	09/12/01
2.5	Control Room Emergency Response Operation	14	10/15/01
2.6	Activation and Operation of the ORAL	8	10/15/01
2.7	Activation and Operation of the ODEF	6	10/15/01
2.8	Security Threat	1	11/16/01
3.1	In-Plant Radiological Monitoring	11	10/15/01
3.2	Field Radiological Monitoring	12	10/15/01
3.3	Dose Assessment and Protective Action	17	10/15/01
4.2	First Aid, Decontamination and Medical Support	6	10/15/01
4.3	Rescue and Emergency Repair Work	10	10/15/01
4.5	Administration of Potassium Iodide (KI)	6	10/15/01
5.2	Recovery and Re-entry	9	10/15/01

Form Number	Title	Revision Number	Referencing Procedure
CR-01	OSM/OSS Checklist	Rev. 2	EPIP 2.5
CR-02	Back Panel Communicator Checklist	Rev. 1	EPIP 2.5
CR-03	Dose Projection & ARM Data Sheet	Rev. 0	EPIP 2.5
CR-04	Control Room to TSC Command and Control Transfer Checklist	Rev. 1	EPIP 2.5
EAL-01	Abnormal Rad Levels/Radioactive Effluent Table	Rev. 2	EPIP 1.1
EAL-02	Fission Barrier Table	Rev. 2	EPIP 1.1
EAL-03	Hazards & Other Conditions Affecting Plant Safety	Rev. 2	EPIP 1.1
EAL-04	System Malfunction Table	Rev. 2	EPIP 1.1
EOF - 02	NRC - HPN Communicator Checklist	Rev. 3	EPIP 1.5
EOF - 03	Technical Recorder Checklist	Rev. 2	EPIP 1.5
EOF - 04	Summary of Computer Data Backup Collection Activities	Rev. 1	EPIP 1.5
EOF - 05	EOF Information Services Representative Checklist	Rev. 2	EPIP 1.5
EOF - 06	DAEC Key Parameter Log	Rev. 0	EPIP 1.5
EOF - 07	Emergency Response and Recovery Director Checklist	Rev. 3	EPIP 1.5
EOF - 08	Rad & EOF Manager Checklist	Rev. 5	EPIP 1.5, 3.3
EOF - 09	EOF STA/OPS Liaison Checklist	Rev. 0	EPIP 1.5
EOF - 10	EOF-TSC Communicator Checklist	Rev. 3	EPIP 1.5
EOF - 11	Support Services Coordinator Checklist	Rev. 1	EPIP 1.5
EOF - 12	Field Team Director Checklist	Rev. 0	EPIP 1.5, 3.3
EOF - 13	Radiological Data Communicator Checklist	Rev. 0	EPIP 1.5, 3.3

EOF - 14	EOF MIDAS Operator Checklist	Rev. 1	EPIP 1.5, 3.3
EOF - 15	Radiological Data Plotter Checklist	Rev. 0	EPIP 1.5, 3.3
EOF - 16	Radiological Assessment Coordinator Checklist	Rev. 1	EPIP 1.5, 3.3
EOF - 17	EOF Security Access Clerk Checklist	Rev. 1	EPIP 1.5
EOF - 18	EOF Staffing Accountability Roster	Rev. 2	EPIP 1.5
EOF - 19	Drill Announcement Message	Rev. 0	EPIP 1.4, 1.5
EOF - 20	Emergency Announcement Message	Rev. 0	EPIP 1.4, 1.5
EOF - 21	Personnel Access Log	Rev. 1	EPIP 1.4, 1.5
EOF - 22	Registration Form	Rev. 0	EPIP 14, 1.5
EOF - 23	Security Post Log	Rev. 1	EPIP 1.4, 1.5
EOF - 24	First Floor Security Post Description	Rev. 1	EPIP 1.4, 1.5
EOF - 25	Fourteenth Floor Security Post Description	Rev. 1	EPIP 1.5
EOF - 27	Status Update Message - EOF Communicator	Rev. 0	EPIP 1.5
EOF - 28	Verbal Closeout Summary	Rev. 0	EPIP 1.5
EOP - 29	Written Closeout Summary	Rev. 0	EPIP 1.5
EOF - 30	Status Board	Rev. 0	EPIP 1.5
EOF - 31	Access B adge Example	Rev. 0	EPIP 1.5
EOF - 32	EOF Staff Response	Rev. 2	EPIP .15
EOF - 33	Recovery Issues	Rev. 0	EPIP 5.2
EOF - 34	EOF Activities	Rev. 0	EPIP 5.2
EOF - 35	Recovery Phase Plan Outline Guidance	Rev. 0	EPIP .52
EOF - 36	RE-Entry Briefing Guide	Rev. 0	EPIP 5.2
EOF - 37	RE-Entry Debriefing Guide	Rev. 0	EPIP 5.2
JPIC - 01	JPIC Manager Checklist	Rev. 4	EPIP 1.4
JPIC - 03	Alliant Spokesperson Checklist	Rev. 3	EPIP 1.4
JPIC - 04	Technical Liaison Checklist	Rev. 4	EPIP 1.4
JPIC - 05	Sequence of Events	Rev. 0	EPIP 1.4

JPIC - 07	Logistics Coordinator Checklist	Rev. 4	EPIP 1.4
JPIC - 08	Logistics Support Checklist	Rev. 4	EPIP 1.4
JPIC - 09	Audiovisual Support Checklist	Rev. 4	EPIP 1.4
JPIC - 11	Rumor Control Coordinator I Checklist	Rev. 3	EPIP 1.4
JPIC - 12	Rumor Control Event Summary Log	Rev. 1	EPIP 1.4
JPIC - 13	Rumor Control Coordinator II Checklist	Rev. 2	EPIP 1.4
JPIC - 14	Public Rumor Control Checklist	Rev. 2	EPIP 1.4
JPIC - 15	News Media Rumor Control Checklist	Rev. 4	EPIP 1.4
JPIC - 16	Assistant JPIC Manager Checklist	Rev. 3	EPIP 1.4
JPIC - 17	JPIC Security Access Control Checklist	Rev. 3	EPIP 1.4
JPIC - 18	Sixth Floor Security Post Description	Rev. 2	EPIP 1.4
JPIC – 19	JPIC Distribution List	Rev. 2	EPIP 1.4
NOTE-01	ERO Notification - Off-hours Phone System Callout	Rev. 2	EPIP 1.2
NOTE-02	ERO Notification - Alphanumeric Paging System Callout	Rev. 2	EPIP 1.2
NOTE-03	Event Notification Worksheet	Rev. 1	EPIP 1.2
NOTE-04	Plant Assembly Notification	Rev. 1	EPIP 1.2
NOTE-05	Emergency Action Level Notification	Rev. 4	EPIP 1.2
NOTE-06	Plant Page for Emergency Classification Changes	Rev.0	EPIP 1.2
ODEF-01	ODEF Decontamination Waiting Area	Rev. 0	EPIP 2.7
ODEF-02	Floor Plan for ORAL/ODEF	Rev. 0	EPIP 2.7
ODEF-03	Travel Route to ORAL/ODEF	Rev. 0	EPIP 2.7
ODEF-04	12th Avenue Entrance to ORAL/ODEF	Rev. 0	EPIP 2.7
ORAA-01	Offsite Relocation and Assembly Area Supervisor's Checklist	Rev. 1	EPIP 2.4
ORAA-02	Health Physics Support for the Offsite Relocation and Assembly Area	Rev. 0	EPIP 2.4
ORAA-03	Security Support for the Offsite Relocation and Assembly Area	Rev. 0	EPIP 2.4

ORAA-05	Offsite Relocation and Assembly Area Parking and Vehicle Monitoring	Rev. 0	EPIP 2.4
OSC-01	OSC Layout	Rev. 0	EPIP 2.1
OSC-02	OSC Organization Chart	Rev. 0	EPIP 2.1
OSC-03	Minimum Staffing Level	Rev. 0	EPIP 2.1
OSC-04	Recommended Log Entry Topics	Rev. 0	EPIP 2.1
OSC-05	Emergency Event Log Sheet	Rev. 0	EPIP 2.1
OSC-06	Personal Statement Concerning Incident	Rev. 0	EPIP 2.1
OSC-07	Emergency Exposure Tracking Log	Rev. 0	EPIP 2.1
OSC-08	OSC Supervisor Checklist	Rev. 0	EPIP 2.1
OSC-09	Health Physics Supervisor Checklist	Rev. 0	EPIP 2.1
OSC-10	Electrical, Mechanical, I&C Maintenance Supervisor Checklist	Rev. 0	EPIP 2.1
OSC-11	Emergency Assignment Staffing Board Duties	Rev. 0	EPIP 2.1
PASE-02	Onsite Assembly Locations	Rev. 2	EPIP 1.3
PASE-05	Site Evacuation Routes	Rev. 0	EPIP 1.3
SAM-01	EOP-SAG Transition Checklist	Rev. 0	EPIP 2.2
TSC-01	Emergency Coordinator Checklist	Rev. 3	EPIP 2.2
TSC-02	TSC Supervisor Checklist	Rev. 2	EPIP 2.2
TSC-03	Site Radiation Protection Coordinator Checklist	Rev. 1	EPIP 2.2
TSC-04	Technical & Engineering Supervisor Checklist	Rev. 2	EPIP 2.2
TSC-05	Quality Assurance Checklist	Rev. 1	EPIP 2.2
TSC-06	Security & Support Supervisor Checklist	Rev. 1	EPIP 2.2
TSC-07	Administrative Supervisor Checklist	Rev. 1	EPIP 2.2
TSC-08	Material Management Supervisor Checklist	Rev. 1	EPIP 2.2
TSC-09	TSC-CR-OSC Communicator Checklist	Rev. 2	EPIP 2.2
TSC-10	CR-TSC-OSC Communicator Checklist	Rev. 2	EPIP 2.2
TSC-11	TSC-EOF-JPIC Communicator Checklist	Rev. 1	EPIP 2.2
TSC-12	ENS Communicator Checklist	Rev. 2	EPIP 2.2

TSC-14	TSC/OSC Operations Liaison Checklist	Rev. 2	EPIP 2.2
TSC-15	Radiological Support Staff Checklist	Rev. 1	EPIP 2.2
TSC-16	Radio Operator - Offsite Checklist	Rev. 0	EPIP 2.2
TSC-17	Radio Operator - Onsite Checklist	Rev. 0	EPIP 2.2
TSC-18	TSC MIDAS Operator Checklist	Rev. 0	EPIP 2.2
TSC-19	Technical & Analysis Engineer Checklist	Rev. 1	EPIP 2.2
TSC-20	TSC Operations Supervisor	Rev. 2	EPIP 2.2
TSC-21	Electrical Engineer Checklist	Rev. 0	EPIP 2.2
TSC-22	I & C Engineer Checklist	Rev. 0	EPIP 2.2
TSC-23	Mechanical Engineer Checklist	Rev. 0	EPIP 2.2
TSC-24	Reactor Engineer Checklist	Rev. 2	EPIP 2.2
TSC-25	SPDS Operator Checklist	Rev. 1	EPIP 2.2
TSC-26	Information Services Representative Checklist	Rev. 2	EPIP 2.2
TSC-27	Fire Marshall Checklist	Rev. 1	EPIP 2.2
TSC-28	NRC Roles During A Nuclear Power Plant Emergency Checklist	Rev. 0	EPIP 2.2
TSC-29	TSC Minimum Staffing Level	Rev. 2	EPIP 2.2
TSC-30	Emergency Action Request Log	Rev. 0	EPIP 2.2
TSC-31	Radio Operator Log	Rev. 0	EPIP 2.2
TSC-32	Status Board Recorder	Rev. 1	EPIP 2.2
TSC-33	Typical Organization of the NRC Site Team	Rev. 0	EPIP 2.2
TSC-34	TSC Organization Chart	Rev. 2	EPIP 2.2
TSC-35	Assignment Form	Rev. 0	EPIP 5.2
TSC-36	Deactivation Report	Rev. 0	EPIP 5.2
TSC-37	Plant Operations Status	Rev. 0	EPIP 5.2
TSC-38	TSC/Control Room/OSC Activities	Rev. 0	EPIP 5.2
TSC-39	TSC Clerical Checklist	Rev. 0	EPIP 2.2

EAI RLE
ABNORMAL RAD LEVEL DIOACTIVE EFFLUENT

EVENT TYPE	UNUSUAL EVENT	ALERT	SITE AREA EMERGENCY	GENERAL EMERGENCY
OFFSITE RAD CONDITIONS	***AU1*** **Any Unplanned Release of Gaseous or Liquid Radioactivity to the Environment That Exceeds Two Times the Offsite Dose Assessment Manual (ODAM) Limit and Is Expected to Continue For 60 Minutes or Longer** Valid Reactor Building or Turbine Building ventilation (Kaman) rad monitor reading above 1 E-3 µCi/cc for more than 60 minutes. **OR** Valid Offgas Stack (Kaman) rad monitor reading above 1 E-1 µCi/cc for more than 60 minutes. **OR** Valid LLRPSF (Kaman) rad monitor reading above 5 E-4 µCi/cc for more than 60 minutes. **OR** Valid GSW rad monitor reading above 3E+3 CPS for more than 60 minutes. **OR** Valid RHRSW & ESW rad monitor reading above 8E+2 CPS for more than 60 minutes. **OR** Valid RHRSW & ESW Discharge Canal rad monitor reading above 1E+3 CPS for more than 60 minutes. **OR** Confirmed sample analyses for gaseous or liquid releases indicates concentrations or release rates in excess of 2 times ODAM limits for greater than 60 minutes. **OR** Valid perimeter radiation monitor reading of greater than 0.10 mR/hr above normal background for 60 minutes. **OR** Valid dose assessment indicating dose rates beyond the site boundary above 0.1 mR/hr TEDE for a period greater than 60 minutes. **Op. Modes: ALL**	***AA1*** **Any Unplanned Release of Gaseous or Liquid Radioactivity to the Environment that Exceeds 200X the Offsite Dose Assessment Manual (ODAM) Limit and is Expected to Continue for 15 Minutes or Longer** Valid Reactor Building or Turbine Building ventilation (Kaman) rad monitor reading above 3 E-2 µCi/cc for more than 15 minutes. **OR** Valid Offgas Stack (Kaman) rad monitor reading above 6 E+0 µCi/cc for more than 15 minutes. **OR** Valid LLRPSF (Kaman) rad monitor reading above 1 E-1 µCi/cc for more than 15 minutes. **OR** Valid GSW rad monitor reading above 3E+5 CPS for more than 15 minutes. **OR** Valid RHRSW & ESW rad monitor reading above 8E+4 CPS for more than 15 minutes. **OR** Valid RHRSW & ESW Discharge Canal rad monitor reading above 1E+5 CPS for more than 15 minutes. **OR** Confirmed sample analyses for gaseous or liquid releases indicates concentrations or release rates with a release duration expected to last for 15 minutes or longer in excess of 200 times ODAM limit. **OR** Valid site boundary radiation reading of greater than 10 mR/hr above normal background and expected to last for 15 minutes or longer. **OR** Valid indication on MIDAS of a release greater than 200 times ODAM limit and expected to last for 15 minutes or longer. **Op. Modes: ALL**	***AS1*** **Site Boundary Dose Resulting from an Actual or Imminent Release of Gaseous Radioactivity Exceeds 100 mrem TEDE or 500 mrem CDE Thyroid for the Actual or Projected Duration of the Release** Valid Reactor Building or Turbine Building ventilation (Kaman) rad monitor reading above 6 E-2 µCi/cc for more than 15 minutes. (Dose assessment not available) **OR** Valid Offgas Stack (Kaman) rad monitor reading above 4 E+1 µCi/cc for more than 15 minutes. (Dose assessment not available) **OR** Valid field survey reading outside the site boundary >100 mR/hr or >500 mR/hr CDE Thyroid. **OR** Dose assessment determines integrated accident dose projection outside the site boundary above 100 mrem TEDE or above 500 mrem CDE Thyroid. **Op. Modes: ALL**	***AG1*** **Site Boundary Dose Resulting from an Actual or Imminent Release of Gaseous Radioactivity Exceeds 1000 mrem TEDE or 5000 mrem CDE Thyroid for the Actual or Projected Duration of the Release** Valid Reactor Building or Turbine Building ventilation (Kaman) rad monitor reading above 6 E-1 µCi/cc for more than 15 minutes. (Dose assessment not available) **OR** Valid Offgas Stack (Kaman) rad monitor reading above 4 E+2 µCi/cc for more than 15 minutes. (Dose assessment not available) **OR** Valid field survey reading outside the site boundary >1,000 mR/hr or >5,000mR/hr CDE Thyroid. **OR** Dose assessment determines integrated accident dose projection outside the site boundary above 1,000 mrem TEDE or above 5,000 mrem CDE Thyroid. **Op. Modes: ALL**
ONSITE RAD CONDITIONS	***AU2*** **Unexpected Increase in Plant Radiation** Uncontrolled loss of reactor cavity or fuel pool water level with all spent fuel assemblies remaining water covered as indicated by ANY of the following: • Report to control room • Valid fuel pool level indication (LI-3413) below 36 feet and lowering • Valid WR GEMAC Floodup indication (LI-4541) coming on scale. **OR** Unexpected ARM reading offscale high or above 1000 times normal reading. **Op. Modes: ALL**	***AA2*** **Major Damage to Irradiated Fuel or Loss of Water Level that Has or Will Result in the Uncovering of Irradiated Fuel Outside the Reactor Vessel** Report of ANY of the following: • Valid ARM HI RAD alarm for the Refueling Floor North End, Refueling Floor South End, New Fuel Storage Area, or Spent Fuel Storage Area • Valid Refueling Floor North End, Refueling Floor South End, or New Fuel Storage Area ARM Reading above 10 mR/hr • Valid Spent Fuel Storage Area ARM Reading above 100 mR/hr **OR** Report of visual observation of Irradiated Fuel uncovered **OR** Water level reading below 450" as indicated on LI4541 (floodup) for the Reactor Refueling Cavity that will result in Irradiated Fuel uncovering **OR** Valid Fuel Pool water level indication (LI-3413) below 16 feet. **Op. Modes: ALL** ***AA3*** **Release of Radioactive Material or Increases in Radiation Levels Within the Facility That Impedes Operation of Systems Required to Maintain Safe Operations or to Establish or to Maintain Cold Shutdown** Valid area radiation monitor (RE9162) reading greater than 15 mR/hr in the Control Room. **OR** Valid area radiation monitor (RE9168) reading greater than 500 mR/hr at the Remote Shutdown Panel, 1C388. **Op. Modes: ALL**		

EAL TABLE

FISSION BARRIER

INDICATORS	FUEL CLAD BARRIER	RCS BARRIER	PRIMARY CONTAINMENT BARRIER
RADIATION / CORE DAMAGE	*Loss* [L] Fuel damage assessment (PASAP 7.2) determines at least 5% fuel clad damage **OR** Fuel damage is indicated by any of the following: [L] Valid drywell rad monitor reading above 7E+2 R/hr **OR** [L] Valid torus rad monitor reading above 3E+1 R/hr **OR** [L] Coolant activity above 300µCi/gm DOSE EQUIVALENT I-131 *Potential Loss* - None	*Loss* [L] Valid drywell rad monitor reading above 5 R/hr after reactor shutdown *Potential Loss* - None	*Loss* - None *Potential Loss* [P] Valid drywell rad monitor reading above 3E+3 R/hr **OR** [P] Valid torus rad monitor reading above 1E+2 R/hr **OR** [P] Core damage assessment determines at least 20% fuel clad damage
RPV LEVEL	*Loss* [L] RPV Level below -25 Inches *Potential Loss* [P] RPV Level below 15 inches	*Loss* [L] RPV Level below 15 inches *Potential Loss* - None	*Loss* - None *Potential Loss* [P] RPV Level below -39 inches
LEAKAGE	**None**	*Loss* - None *Potential Loss* [P] RCS Leakage is above 50 GPM **OR** [P] Unisolable primary system leakage outside the drywell as indicated by area temps or ARMs exceeding the Max Normal Limits per EOP 3, Table 6.	*Loss* [L] Failure of both isolation valves and a downstream pathway to the environment exists **OR** [L] Unisolable primary system leakage outside the drywell as indicated by area temps or ARMs exceeding the Max Safe Limits per EOP 3, Table 6, after Containment Isolation. **OR** [L] Primary containment venting performed per EOPs *Potential Loss* - None
PRIMARY CONTAINMENT ATMOSPHERE	**None**	*Loss* [L] Drywell pressure above 2 psig and not caused by a loss of DW Cooling *Potential Loss* - None	*Loss* [L] Rapid unexplained decrease following initial increase in pressure **OR** [L] Drywell pressure response not consistent with LOCA conditions *Potential Loss* [P] Torus pressure reaches 53 psig **OR** [P] Drywell or torus H_2 CANNOT be determined to be below 6% **AND** Drywell or torus O_2 CANNOT be determined to be below 5%
EC/OSM JUDGMENT	Any condition which in the EC/OSM's judgment indicates loss or potential loss of the fuel clad barrier due to Imminent barrier degradation Degraded fission barrier monitoring capability. [L] Loss **OR** [P] Potential Loss	Any condition which in the EC/OSM's judgment indicates loss or potential loss of the RCS barrier due to Imminent barrier degradation **OR** Degraded fission barrier monitoring capability. [L] Loss **OR** [P] Potential Loss	Any condition which in the EC/OSM's judgment indicates loss or potential loss of the primary containment barrier due to Imminent barrier degradation **OR** Degraded fission barrier monitoring capability. [L] Loss **OR** [P] Potential Loss

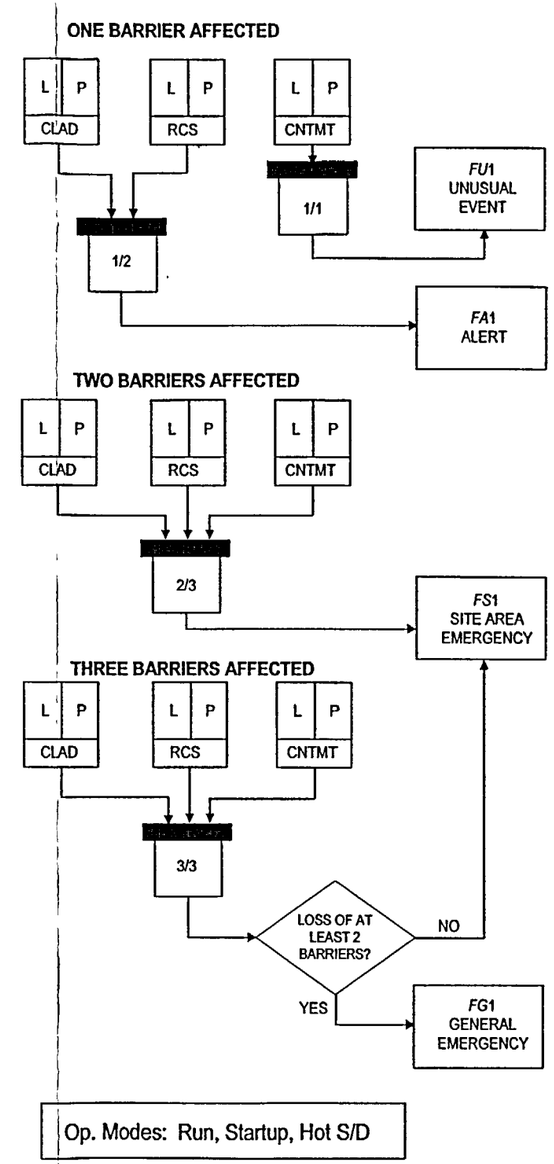

Op. Modes: Run, Startup, Hot S/D

IMMINENT - No turnaround in safety system performance is expected and escalation to General Emergency conditions is expected within 2 hours.

NOTE: *Step 1; for all indicators, move from left to right across table, marking all applicable "L's" and "P's" for each barrier, based on plant indications. Then, step 2, transcribe all "L's" and "P's" marked on Barrier Table to the Logic Diagram (at right). "L's" and "P's" should be marked for each affected barrier (working top to bottom) on the flowchart.Step 3, an "L" or "P" marked for each associated barrier will constitute a Logic I input. When coincidence is met, then the EAL can be declared.*

[L] = *Loss* (of a fission product barrier) - A severe challenge to a fission product barrier exists such that the barrier is considered incapable of performing its safety function.

[P] = *Potential Loss* (of a fission product barrier) - A challenge to a fission product barrier exists such that the barrier is considered degraded in its ability to perform its safety function.

EAL TABLE

HAZARDS and OTHER CONDITIONS AFFECTING PLANT SAFETY

EVENT TYPE	UNUSUAL EVENT	ALERT	SITE AREA EMERGENCY	GENERAL EMERGENCY
NATURAL DISASTERS	***HU1*** **Natural and Destructive Phenomena Affecting the Protected Area** Earthquake detected per AOP 901, Earthquake. **OR** Report of tornado touching down within plant protected area or within switchyard. **OR** Assessment by the control room that an event has occurred. **OR** Vehicle crash into plant structures or systems within protected area boundary. **OR** Report of an unanticipated explosion within the protected area boundary resulting in visible damage to structures or equipment. **OR** Turbine failure resulting in casing penetration or damage to turbine or generator seals. **OR** River level above 757 feet. **OR** Any area water level above Max Normal Operating Limit. **OR** River level below 725 feet 6 inches. **Op. Modes: ALL**	***HA1*** **Natural and Destructive Phenomena Affecting the Plant Vital Area** Earthquake peak horizontal acceleration above ± 0.06 Gravity. **OR** Report of tornado striking plant vital area. **OR** Report to control room of damage affecting safe shutdown areas. **OR** Vehicle crash affecting plant vital areas. **OR** Sustained wind speed above 95 MPH. **OR** Missiles affecting safe shutdown areas. **OR** River level above 767 feet. **OR** Water level above Max Safe Operating Limit in 2 or more areas AND Reactor shutdown is required. **OR** River level below 724 feet 6 inches. **Op. Modes: ALL**		
FIRE	***HU2*** **Fire Within PROTECTED AREA Not Extinguished Within 15 Minutes of Detection** Fire in buildings or areas contiguous to any of the following areas not extinguished within 15 minutes of control room notification or verification of a control room alarm: ▪ Reactor, Turbine, Control, Admin/Security ▪ Intake structure ▪ Pump house **Op. Modes: ALL**	***HA2*** **Fire Affecting the Operability of Plant Safety Systems Required to Establish or Maintain Safe Shutdown** Fire or explosion in any of the following areas: ▪ Reactor, Turbine, Control, Admin/Security ▪ Intake structure ▪ Pump house **AND** Affected system parameter indications show degraded performance or plant personnel report visible damage to permanent structures or equipment within the specified area. **Op. Modes: ALL**		
OTHER HAZARDS AND FAILURES	***HU3*** **Release of Toxic or Flammable Gases Deemed Detrimental to Safe Operation of the Plant** Toxic or flammable gas release affecting normal operation. **OR** Report by local, county or State official for potential evacuation of site personnel based on offsite event. **Op. Modes: ALL**	***HA3*** **Release of Toxic or Flammable Gases Within a Facility Structure Which Jeopardizes Operation of Systems Required to Maintain Safe Operations or to Establish or Maintain Cold Shutdown** Toxic or flammable gas making safe shutdown areas uninhabitable or inaccessible. **Op. Modes: ALL**		
SECURITY	***HU4*** **Confirmed Security Event Which Indicates a Potential Degradation in the Level of Safety of the Plant** Suspected sabotage device discovered within plant protected area and outside plant vital area. **OR** Suspected sabotage device discovered in plant switchyard. **OR** "LO" Credible Security Threat **Op. Modes: ALL**	***HA4*** **Security Event in a Plant Protected Area** Intrusion into plant protected area by a hostile force. **OR** Sabotage device discovered in the plant protected area. **OR** "HI" Credible Security Threat **Op. Modes: ALL**	***HS1*** **Security Event in a Plant Vital Area** Intrusion into plant vital area by a hostile force. **OR** Sabotage device discovered in the plant vital area. **Op. Modes: ALL**	***HG1*** **Security Event Resulting in Loss of Ability to Reach and Maintain Cold Shutdown** Loss of physical control of the Control Room. **OR** Loss of physical control of remote shutdown capability. **Op. Modes: ALL**
CONTROL ROOM EVACUATION	None	***HA5*** **Control Room Evacuation Has Been Initiated** Control room evacuation initiated per AOP 915, Shutdown Outside Control Room **Op. Modes: ALL**	***HS2*** **Control Room Evacuation Has Been Initiated and Plant Control Cannot Be Established** Control room has been evacuated AND control of plant from Remote Shutdown Panel 1C388 NOT established within 20 minutes. **Op. Modes: ALL**	None
EC/OSM JUDGMENT	***HU5*** **Other Conditions Existing Which in the Judgment of the EC/OSM Warrant Declaration of an Unusual Event** Other conditions exist which in the judgment of the EC/OSM indicate potential degradation of the level of safety of the plant. **Op. Modes: ALL**	***HA6*** **Other Conditions Existing Which in the Judgment of the EC/OSM Warrant Declaration of an Alert** Other conditions exist which in the judgment of the EC/OSM indicate that plant systems may be degraded and that increased monitoring of plant functions is warranted. **Op. Modes: ALL**	***HS3*** **Other Conditions Existing Which in the Judgment of the EC/OSM Warrant Declaration of a Site Area Emergency** Other conditions exist which in the judgment of the EC/OSM indicate actual or likely major failures of plant functions needed for protection of the public. **Op. Modes: ALL**	***HG2*** **Other Conditions Existing Which in the Judgment of the EC/OSM Warrant Declaration of a General Emergency** Other conditions exist which in the judgment of the EC/OSM indicate EITHER: • Actual or imminent substantial core degradation with potential for loss of containment. • Potential for uncontrolled radionuclide releases which can reasonably be expected to exceed EPA PAG plume exposure levels outside the site boundary. **Op. Modes: ALL**

Safe Shutdown Areas

Category	Area
Electrical Power	Switchyard, 1G31 DG and Day Tank Rooms, 1G21 DG and Day Tank Rooms, Battery Rooms, Essential Switchgear Rooms, Cable Spreading Room
Heat Sink/ Coolant Supply	Torus Room, Intake Structure, Pumphouse
Containment	Drywell, Torus
Emergency Systems	NE, NW, SE Corner Rooms, HPCI Room, RCIC Room, RHR Valve Room, North CRD Area, South CRD Area
Other	Control Building, Remote Shutdown Panel 1C388 Area, Panel 1C56 Area, SBGT Room

Water Level Operating Limits

Room Area	Indicator	Max Normal Operating Limit (inches)	Max Safe Operating Limit (inches)
HPCI Room Area	LI 3768	2	6
RCIC Room Area	LI 3769	3	6
A RHR Corner Room SE Area	LI 3770	2	10
B RHR Corner Room NW Area	LI 3771	2	10
Torus Area	LI 3772	2	12

Systems & Equipment of Concern

- Reactivity Control
- Containment (Drywell/Torus)
- RHR/Core Spray/SRV's
- HPCI/RCIC
- RHRSW/River Water/ESW
- Onsite AC Power/EDG's
- Offsite AC Power
- Instrument AC
- DC Power
- Remote Shutdown Capability

EAL TABLE

SYSTEM MALFUNCTION

EVENT TYPE	UNUSUAL EVENT	ALERT	SITE AREA EMERGENCY	GENERAL EMERGENCY
LOSS OF POWER	***SU1*** **Loss of All Offsite Power to Essential Busses for Greater Than 15 Minutes** Loss of Offsite Power Lasting More Than 15 Minutes **Op. Modes: ALL**	***SA1*** **Loss of All Offsite Power and Loss of All Onsite AC Power to Essential Busses During Cold Conditions** vhan 15 minutes **Op. Modes: Cold S/D, Refuel, Defueled**	***SS1*** **Loss of All Offsite Power and Loss of All Onsite AC Power to Essential Busses** Loss of Voltage on Buses 1A3 and 1A4 lasting more than 15 minutes **Op. Modes: Run, Startup, Hot S/D**	***SG1*** **Prolonged Loss of All Offsite Power and Prolonged Loss of All Onsite AC Power** Loss of Voltage on Buses 1A3 and 1A4 and ANY of the following: • Restoration of power to either Bus 1A3 or 1A4 is NOT likely within 4 hours • RPV level indeterminate • RPV Level below +15 inches
	SU7 **Unplanned Loss of Required DC Power During Cold Shutdown or Refuel Mode For Greater Than 15 Minutes** Unplanned Loss of Div 1 and Div 2 125 VDC busses based on bus voltage less than 105 VDC indicated **AND** Failure to restore power to at least one required 125 VDC bus within 15 minutes from time of loss **Op. Modes: Cold S/D, Refuel**	***SA5*** **AC Power Capability to Essential Busses Reduced to a Single Power Source for Greater Than 15 Minutes Such That Any Additional Single Failure Would Result in Station Blackout** Only one AC power source remains available to supply Bus 1A3 or Bus 1A4 AND if it is lost, a Station Blackout will occur. **Op. Modes: Run, Startup, Hot S/D**	***SS3*** **Loss of All Vital DC Power** Unplanned Loss of Div 1 and Div 2 125 VDC busses Lasting More Than 15 Minutes **Op. Modes: Run, Startup, Hot S/D**	
RPS FAILURE	None	***SA2*** **Failure of Reactor Protection System Instrumentation to Complete or Initiate an Automatic Reactor Scram Once a Reactor Protection System Setpoint Has Been Exceeded and Manual Scram Was Successful** Auto Scram Failure **AND** Operator actions to reduce power are SUCCESSFUL as indicated by either ALL Rods Full-In, **OR** Reactor Shutdown Under All Conditions Without Boron, **OR** Reactor power below the APRM Downscale Alarm on ALL valid APRM instruments **Op. Modes: Run, Startup**	***SS2*** **Failure of Reactor Protection System Instrumentation to Complete or Initiate on Automatic Reactor Scram Once a Reactor Protection System Setpoint Has Been Exceeded and Manual Scram Was NOT Successful** In ATWS EOP **AND** Reactor power above the APRM Downscale Alarm on ANY valid APRM instrument, **OR** Boron Injection Initiation Temperature (BIIT) Curve (EOP Graph 6) exceeded **Op. Modes: Run, Startup**	***SG2*** **Failure of the Reactor Protection System to Complete an Automatic Scram and Manual Scram was NOT successful and There Is Indication of an Extreme Challenge to the Ability to Cool the Core** Entry into ATWS EOP- RPV Control is required **AND** RPV level cannot be maintained above -25 inches **OR** HCL Curve (EOP Graph 4) exceeded **Op. Modes: Run, Startup**
INABILITY TO MAINTAIN SHUTDOWN CONDITIONS	***SU2*** **Inability to Reach Required Shutdown Within Technical Specification Limits** Plant NOT brought to required mode within applicable LCO Action Statement Time Limits **Op. Modes: Run, Startup, Hot S/D**	***SA3*** **Inability to Maintain Plant in Cold Shutdown** 1. Loss of decay heat removal systems required to maintain cold shutdown. **AND** 2. With CONTAINMENT CLOSURE not established, temperature conditions exist that either (a) Cause reactor coolant temperature to exceed the Technical Specification limit of 212°F. **OR** (b) Result in uncontrolled temperature rise approaching 212°F. **Op. Modes: Cold S/D, Refuel**	***SS4*** **Complete Loss of Function Needed to Achieve or Maintain Hot Shutdown** EOP Graph 4 Heat Capacity Limit is exceeded **OR** Reactor CANNOT be brought subcritical **Op. Modes: Run, Startup, Hot S/D** ***SS5*** **Loss of Water Level in the Reactor Vessel That Has or Will Uncover Fuel in the Reactor Vessel** NO cooling method lined up or available AND RPV Level below 15 inches **Op. Modes: Cold S/D, Refuel**	See Fission Barrier Table
INSTRUMENTATION / COMMUNICATION	***SU3*** **Unplanned Loss of All Safety System Annunication or Indication in the Control Room for Greater Than 15 Minutes** Unplanned loss of most annunciators on panels 1C03, 1C04 and 1C05 lasting more than 15 minutes AND compensatory non-alarming indications are available **Op. Modes: Run, Startup, Hot S/D** ***SU6*** **Unplanned Loss of All Onsite or Offsite Communications Capabilities** Loss of ALL onsite telephone and radio communication methods (PABX, direct-ring, UHF, and radiological survey radio systems) **OR** Loss of ALL electronic communication methods with government agencies (PABX, direct-ring, ENS, microwave and police radio) **Op. Modes: ALL**	***SA4*** **Unplanned Loss of Most or All Safety System Annunication or Indication in Control Room With Either (1) a Significant Transient in Progress, or (2) Compensatory Non-Alarming Indicators are Unavailable** Unplanned loss of most annunciators on panels 1C03, 1C04 and 1C05 lasting more than 15 minutes and EITHER. • Significant transient in progress • Loss of compensatory non-alarming indications. **Op. Modes: Run, Startup, Hot S/D**	***SS6*** **Inability to Monitor a Significant Transient in Progress** Significant transient in progress and BOTH of the following • Loss of annunciators on panels 1C03, 1C04 and 1C05 AND • Loss of compensatory non-alarming indications **Op Modes: Run, Startup, Hot S/D**	See Fission Barrier Table
COOLANT ACTIVITY	***SU4*** **Fuel Clad Degradation** Valid Pretreat RM-4104 rad monitor reading above 4E+3 mR/hr **OR** Coolant activity above 1.2 µCi/ml DOSE EQUIVALENT I-131 **Op. Modes: Run, Startup, Hot S/D**	See Fission Barrier Table	See Fission Barrier Table	See Fission Barrier Table
COOLANT LEAKAGE	***SU5*** **RCS Leakage** Unidentified or pressure boundary leakage greater than 10 GPM. **OR** Identified leakage greater than 25 GPM **OR** Main steam line break as determined from annunciators or plant personnel report **Op. Modes: Run, Startup, Hot S/D**	See Fission Barrier Table	See Fission Barrier Table	See Fission Barrier Table