ATTACHMENT IV

NOT USED

ATTACHMENT V

NOT USED

ATTACHMENT VI
MISCELLANEOUS REFERENCE DATA

1. JACKING PERFORMANCE INFORMATION, ORIGINAL SOURCE: TK SIMPLEX CATALOG, HYDRAULIC AND MECHANICAL JACKS FOR INDUSTRY, 1990, SEE PAGES VI-2 THRU VI-6 (FOR INFORMATION ONLY: TYPE HSR-258T & HSR-2510T DIMENSIONAL INFORMATION AS USED IN ATTACHMENTS I & IX, WHICH APPROXIMATES THE 25 TON JACK USED IN CONSTRUCTION OF INITIAL W8x31 STEEL SETS)

2. JACKING PERFORMANCE INFORMATION, NEW SOURCE: SIMPLEX CATALOG NO. SC101, HYDRAULIC AND MECHANICAL POWER, 1995, SEE PAGES VI-7 & VI-8 (FOR INFORMATION ONLY: DIMENSIONAL INFORMATION FOR TYPES R-258 & R-2510 WHICH ARE SAME AS 25 TON JACKS IN ITEM 1, ABOVE. ALSO, AS NOTED IN ATTACHMENT VIII, PAGE VIII-1, ANALYSIS FOR 15 TON JACKING LOAD REQUIRED FOR PROPOSED W6x20 STEEL SETS USED SAME JACKING CONFIGURATION AS USED IN ATTACHMENT I)

SIMPLEX® Spring Return Tooling Cylinders

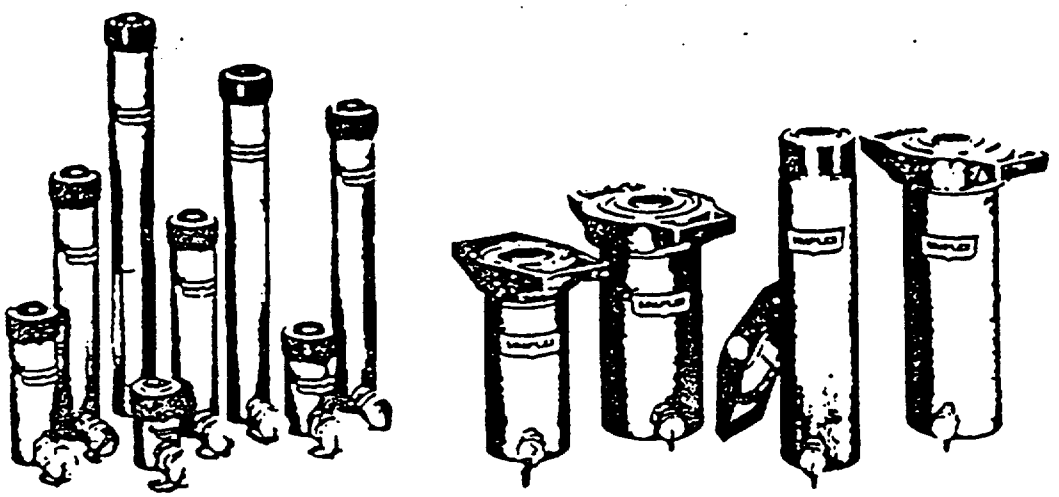

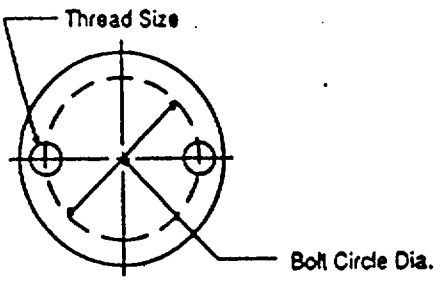

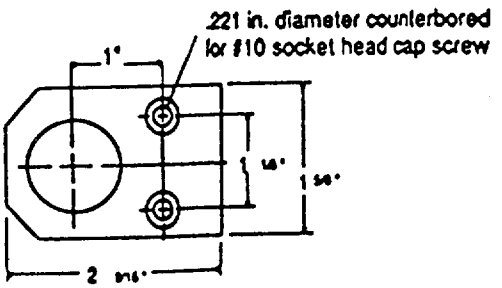

HSR 50 Dimensions

Mounting Hole Dimensions

Cylinder	Thread Size	Bolt Circle Diameter (in)
*5 ton	1/4 - 20 x 1/4	1.00
10 ton	5/16 - 18 x 1/4	1.56
15 ton	3/8 - 16 x 7/8	1.87
25 ton	1/2 - 16 x 7/8	2.31
**50 ton	1/2 - 13 x 3/4	3.75

* All 5 ton models except HSR50
** HSR506T & HSR5013T only

Collar & Plunger Threads

Cylinder	Collar Thread Size	Plunger Thread Size
*5 ton	1 1/4 - 16 x 1 1/8	3/4 - 16 x 3/4
10 ton	2 1/4 - 14 x 1 1/8	**1 - 8 x 3/4
15 ton	2 3/4 - 16 x 1 13/16	1 - 8 x 1
25 ton	3 5/16 - 12 x 1 13/16	3 5/16 - 12 x 1 13/16
30 ton	3 5/16 - 12 x 1 13/16	1 1/4 - 16 x 1 5/16
50 ton	5 - 12 x 2 1/4	----
75 ton	5 3/4 - 12 x 1 3/4	----
100 ton	6 1/4 - 12 x 2 1/4	----

* None on HSR50
** None on HSR101T

Suggested Tonnage Gauges for HSR Series

Cylinder	Gauge	Gauge Face Diameter (in)
5 ton	1917201	2 1/2
10 ton	1917301	2 1/2
15 ton	1917401	2 1/2
25 ton	1917701	2 1/2
30 ton	1915801	3 1/2
50 ton	1916301	3 1/2
100 ton	1916701	3 1/2

For further information on gauges see page 32.

SIMPLEX® Spring Return Tooling Cylinders

5 to 100 ton HSR-series

These single-acting, spring return cylinders are an excellent choice for maintenance lifting, machinery positioning, or any of a wide variety of high pressure, heavy duty pressing or tooling operations.

All models except the HSR-50 and HSR-101T have plunger, base and collar threads to ensure application flexibility and are equipped with snap-in removable grooved load caps. The HSR-series cylinders include high-flow, quick-disconnect ram half-couplers.

Plated pistons not only resist corrosion, they also provide exceptional bearing surfaces. All collar threads are designed to hold the full rated capacity of the cylinders. Simplex HSR-series cylinders have a 2:1 factor of safety on material yield and are in full compliance with ASME/ANSI B30.1 safety standards.

The Simplex HSR-series cylinders are dimensionally interchangeable with most competitive models.

The HSR506T, HSR5013T, HSR756T, HSR1006T and HSR10010T include removable thread-on handles.

Solid Ram - Spring Return Cylinders

Model Number	Order Number	Capacity (tons)	Stroke (in)	Closed Height (in)	Pressure @ Capacity (psi)	Reservoir Capacity Required (cu in)	Body Dia. (in)	Effective Area (sq in)	Piston Dia. (in)	Weight (lbs)	Smallest Suggested Hand Pump
HSR-50	13171		1/8	1 1/8		.6				2 1/2	
HSR-51T	13172		1	4 11/32		1.0				2 1/2	
HSR-53T	13173		3	6 1/2		3.0				3 1/2	
HSR-55T	13174	5	5	8 1/2	10,060	5.0	1 1/2	.99	1	4	
HSR-57T	13175		7	10 3/4		7.0				5	
HSR-59T	13176		9 1/8	12 3/4		9.1				5 1/2	
HSR-101T	13177		1	3 17/32		2.2				3 1/2	34145
HSR-102T	13178		2 1/2	4 25/32		4.8				4 3/4	
HSR-104T	13179		4 1/8	6 3/4		9.2				6 1/2	
HSR-106T	13180		6 1/2	9 3/4		13.7				8 3/4	
HSR-108T	13181	10	8	11 3/4	8,945	18.0	2 1/2	2.24	1 1/2	10 1/2	
HSR-1010T	13182		10 1/2	13 3/4		22.7				12	
HSR-1012T	13183		12	15 3/4		27.0				13 1/2	
HSR-1014T	13184		14	17 3/4		31.5				15 1/2	34003
HSR-152T	13152		2	5 7/8		6.3				8 1/2	
HSR-154T	13153		4	7 7/8		12.6				10 3/4	34145
HSR-156T	13154	15	6	10 11/16	9,554	19.0	2 3/4	3.14	1 3/4	14 1/2	
HSR-1510T	13156		10	14 11/16		31.4				19 1/2	
HSR-1512T	13157		12	16 11/16		37.7				22	34003
HSR-1514T	13158		14	18 11/16		44.0				24 1/2	
HSR-251T	13160		1	5 1/2		5.2				12	
HSR-252T	13161		2	6 1/2		10.3				15	34145
HSR-254T	13162		4	8 1/2		20.6				18	
HSR-256T	13163		6 1/2	10 3/4		32.2				23	
HSR-258T	13164	25	8 1/2	12 3/4	9,700	42.5	3 3/4	5.15	2 1/2	27	34003
HSR-2510T	13165		10 1/2	14 3/4		52.8				31	
HSR-2512T	13166		12 1/2	16 3/4		63.1				35	
HSR-2514T	13167		14 1/2	18 3/4		73.4				39	35102
HSR-308T	13270	30	8 1/2	15 1/2	9,245	53.8	4	6.49	2 1/2	40	
HSR-502T	13271		2	8 13/16		22.1				32	34145
HSR-506T	13273	50	6 1/4	11 1/2	9,054	69.0	5	11.05	3 1/2	50	35102
HSR-5013T	13275		13 1/4	18 1/2		146.3				78	
HSR-756T	13276	75	6 1/8	11 1/4	9,430	97.4	5 3/4	15.90	3 3/4	63	
HSR-1006T	13277		6 1/2	13 1/2		137.8				90	
HSR-10010T	13278	100	10 1/4	18 7/8	9,695	212.0	6 1/2	20.63	4 1/2	110	

[illegible] are suggested for these units (see pages 19-25).

AS USED IN ATTACHS. I & IV

SIMPLEX® | VL Jacking Cylinder Tables

VL Plain Piston Cylinders

Model Number	Order Number	Capacity (tons)	Stroke (in)	Closed Ht. (in)	Reservoir Cap. req. (cu in)	Effective Area (sq in)	Pressure @ Cap. (psi)	Body Diam. (in)	Rod Diam. (in)	Weight (lbs)
CC306	15002	30	6	8.87	38.9	6.49	9,240	4.00	2.88	32
CC3012	15003		12	14.87	77.9					53
CC506	15021	50	6	8.97	66.3	11.05	9,054	5.25	3.75	55
CC5012	15022		12	14.97	133.0					92
CC1006	15041	100	6	10.02	124.0	20.63	9,695	7.19	5.13	115
CC10012	15042		12	16.02	248.0					184
CC1502	15060	150	2	6.50	66.4	33.18	9,041	9.00	6.50	117
CC1506	15061		6	10.50	199.0					189
CC15012	15062		12	16.50	398.0					297
CC2002	15080	200	2	7.50	88.4	44.18	9,054	10.50	7.50	184
CC2006	15081		6	11.50	265.0					282
CC20012	15082		12	17.50	530.0					429
CC3002	15201	300	2	9.00	120.3	60.13	9,978	12.00	8.75	288
CC3006	15202		6	13.00	361.0					405
CC30012	15203		12	19.00	722.0					597
CC5002	15220	500	2	11.50	207.7	103.87	9,628	16.00	11.5	655
CC5006	15221		6	15.50	623.0					855
CC50012	15222		12	21.50	1246.0					1197

VL Lock Nut Cylinders

Model Number	Order Number	Cap. (tons)	Stroke (in)	Closed Ht. (in)	Reservoir Cap. Req. (cu in)	Effective Area (sq in)	Pressure @ Cap. (psi)	Body Diam. (in)	Rod Diam. (in)	Lock Nut (in)	Weight (lbs)
CCLN302	15101	30	2	5.87	13.0	6.49	9,240	4.00	2.88	1.00	21
CCLN306	15102		6	9.87	38.9						35
CCLN3012	15103		12	15.87	77.9						57
CCLN502	15120	50	2	6.22	22.1	11.05	9,054	5.25	3.75	1.25	38
CCLN506	15121		6	10.22	66.2						63
CCLN5012	15122		12	16.22	133.0						100
CCLN1002	15140	100	2	7.52	41.3	20.63	9,695	7.19	5.13	1.50	87
CCLN1006	15141		6	11.52	124.0						132
CCLN10012	15142		12	17.52	248.0						202
CCLN1502	15160	150	2	8.25	66.4	33.18	9,041	9.00	6.50	1.75	149
CCLN1506	15161		6	12.25	199.0						221
CCLN15012	15162		12	17.25	398.0						311
CCLN2002	15180	200	2	9.50	88.4	44.18	9,054	10.50	7.50	2.00	233
CCLN2006	15181		6	13.50	265.0						332
CCLN20012	15182		12	19.50	530.0						479
CCLN3002	15401	300	2	11.50	120.3	60.13	9,978	12.00	8.75	2.50	357
CCLN3006	15402		6	15.50	361.0						485
CCLN30012	15403		12	21.50	722.0						677
CCLN5002	15420	500	2	14.75	207.7	103.87	9,628	16.00	11.5	3.25	813
CCLN5006	15421		6	18.75	623.0						1041

SIMPLEX®

VL Jacking Cylinders

Unparalleled Jacking Performance

These economical, single-acting, load-return cylinders are the perfect choice for use in tight working conditions such as bridge lifting as well as other construction or jacking applications. Simplex VL jacking cylinders offer up to 2" more stroke than conventionally designed single-acting cylinders of equal closed height.

Only Simplex jacking cylinders employ the exclusive Smart Stop™ 3-Way Over-travel Prevention System. First, a red warning ring appears when the piston has reached the limit of its rated stroke. If this warning goes unnoticed when the cylinder is under load, a bleed valve safely vents oil to the atmosphere. Finally, an internal stop ring prevents over-extension of the piston when operating under no load conditions.

VL jacking cylinders are available in a plain piston version, or with threaded pistons and lock nuts. The lock nut version eliminates the need for cribbing loads in applications requiring sustained load holding.

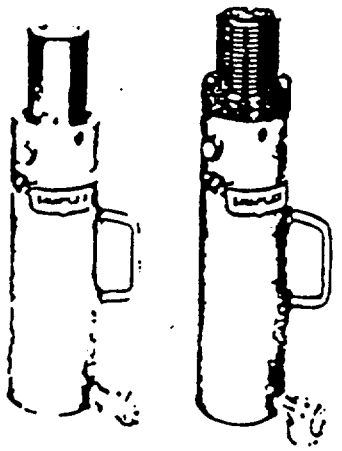

VL plain piston — VL threaded jacking cylinder with lock nut

Other unique Simplex features

- VL jacking cylinders comply with ASME/ANSI B30.1 safety standards.
- Domed piston rods minimize the effect of eccentric and side loading.
- Grease fittings protect against moisture, dirt and corrosion.
- Plated pistons resist corrosion.
- Built-in carrying handles on 30 and 50 ton models.
- Eye bolts for lifting and positioning on 100-500 ton models.
- Specially designed seals avoid damage when the piston is extended beyond its rated stroke under load.
- Black-oxided lock nuts resist corrosion.

Economic Hydraulic System Design

Templeton, Kenly & Co.'s patented Retractor Valve allows the practical application of our VL jacking cylinders into systems less costly than traditional high-tonnage jacking systems.

The following price percentage comparison demonstrates this cost savings. Each system includes four (4) 200 ton X 6 inch stroke cylinders. One of the systems utilizes traditional double-acting cylinders with double runs of hose to each cylinder. The other uses the new Simplex single-acting VL Jacking Cylinders and a Retractor Valve equipped pump.

System Component	Traditional Double-Acting System		Simplex System w/VL Jacking Cylinders and Retractor Valve	
	Order #	% of Sys. Cost	Order #	% of Trad. Sys. Cost
Pump: 1.5 HP Perm. Mag. 5 Gallon Reservoir, Manual 3 Pos. Valve.	7100504	12.5	7100513	12.7
Control Manifold:	18086	1.8	18086	1.8
Return Manifold:	1814201	.5	Not Required	0.0
Hoses: Assumes				
• 2 cylinders @ 10' distance	(8) 18204	4.4	(4) 18098	4.0
• 2 cylinders @ 30' distance	(8) 18202	3.7	(4) 18097	3.6
• 1/4" I.D. hose on double-acting	(1) 18164	.3	(8) 18113	.3
• 3/8" I.D. on single-acting.	(16) 18113	.6		
All hoses are 10 foot multiples.				
Check Release Valve:	(4) 18074	4.7	(4) 18074	4.7
Cylinders:	(4) 13233	71.5	(4) 15081	49.9
Total System Cost =		100.0		77.0

Savings with new Simplex VL Jacking Cylinders = 23%

SIMPLEX® Double-Acting Solid Ram Cylinders

Simplex Double-Acting Cylinders should be considered when the application requires fast cylinder retraction and/or frequent duty cycles. They are also necessary for applications requiring both push and pull force. These cylinders not only retract faster, they also allow for better retraction control than single acting cylinders. More rigorous duty cycles are possible because the inherent design keeps the cylinder rod lubricated. All double-acting cylinders are equipped with safety relief valves to protect against over-pressurizing the rod end of the cylinder.

- Most models have threaded plungers to accommodate pulling attachments.
- All cylinders have a 2:1 factor of safety on material yield and comply fully with ASME/ANSI B30.1 safety standards.
- Tonnage gauges and swivel load caps are also available for many of these cylinders.
- The Pine cylinder line is available on a build-to-order basis for solid ram applications up to 664 ton capacity. (See page 29.)
- All models include high flow couplings.

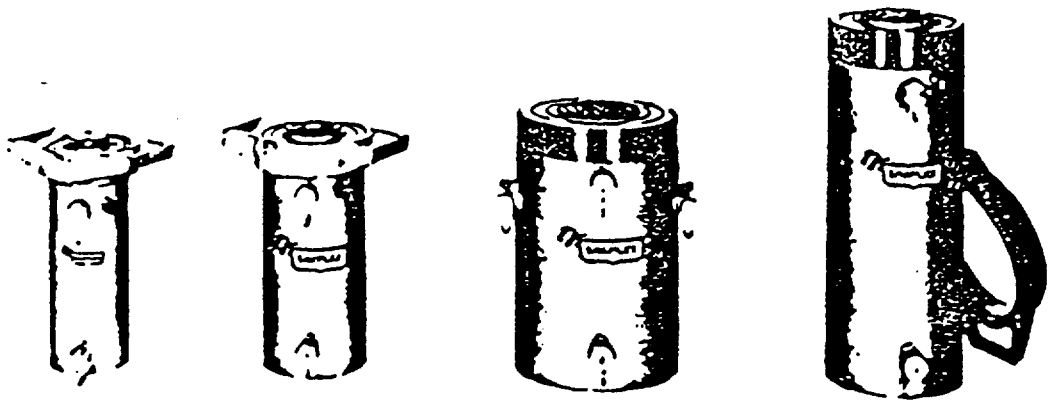

Double-Acting Solid Ram Cylinders

Model Number	Order Number	Push Cap. (tons)	Stroke (in)	Pull Cap. (tons)	Closed Height (in)	Pressure at Cap. (psi)	Effective Area (sq in)	Pump Reservoir Cap. Req. (cu in)	Body Dia. (in)	Plunger Internal Thread Size X Length	Collar Thread Size X Length	Piston Rod Dia. (in)	Weight (lbs)
H506T	1332201	50	6 1/4	16.8	13 1/4	9,054	11.05	46	5	1 - 12 x 1 1/2	5 - 12 x 1 3/4	3 1/4	85
H5012T	1332501		12		19 1/4			92					130
H5024T	1332601		24		31 3/4			184					223
H100-6DAT	13356	100	6 3/16	40	13 7/16	9,239	21.65	77	7	3 1/4 - 12 x 2 1/2	7 - 12 x 2 1/2	4	152
H100-12DAT	13951		12		19 7/16			151					187
H150-6DAT	13363	150	6 3/16	61	15 7/16	9,041	33.18	120	8.5	3 1/2 - 12 x 2 3/4	8 1/2 - 12 x 2 7/16	5	218
H150-12DAT	13953		12		21 1/4			238					295
RC-20006	13233	200	6	72	15 7/16	9,054	44.18	170	10	———	9 3/4 x 1 7/8	6	315
RC-20013	13234		13		22 3/16			368					440

Mounting Holes and Assessories

Cylinder Series	Thread Size	Bolt Circle Dia. (in)	Tonnage Gauge	Swivel Cap Number	Additional Height of Cap (in)
50 ton	3/4 - 11 x 3/4	3.75	1916301	———	———
100 ton	3/4 - 11 x 1	4.25	1916601	18325	3/4
150 ton	1 - 8 x 1 3/4	5.00	1917101	18328	1 3/4
200 ton	1 - 8 x 1 1/4	5.00	1900501	———	———

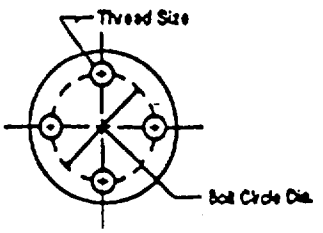

SIMPLEX®

A Division Of Templeton, Kenly & Co., Inc.

HYDRAULIC AND MECHANICAL POWER

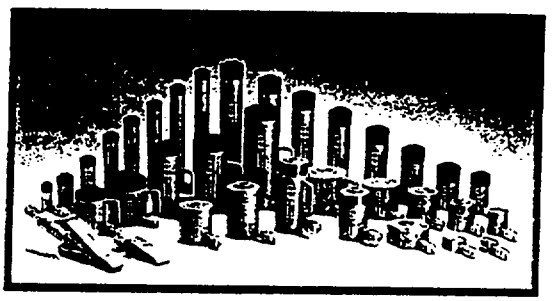

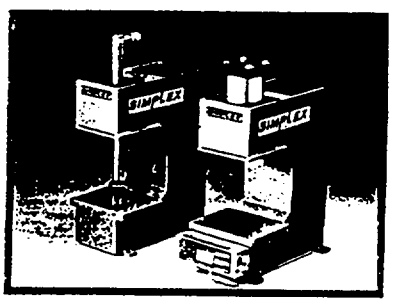

SC101

SPRING RETURN - 15-25 TON CYLINDERS

Simplex Cylinders Quickly & Safely Reshape Steel Coils.

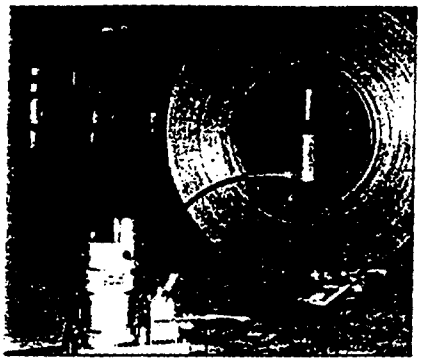

Large steel coils that were damaged in handling would not fit the arbor of a large steel slitting machine. Using a Simplex R256 cylinder and P70 Series pump, maintenance crews were able to reshape the coil. Oil saving time and expense in the process. Simplex hydraulics were much faster and safer than the methods we used previously.

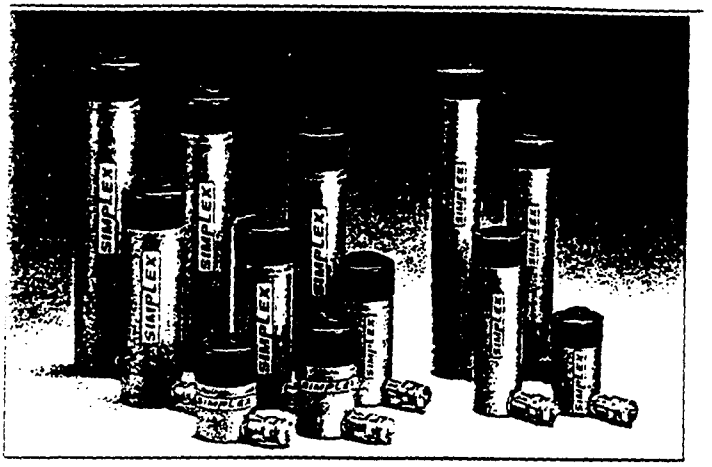

DIAGRAM

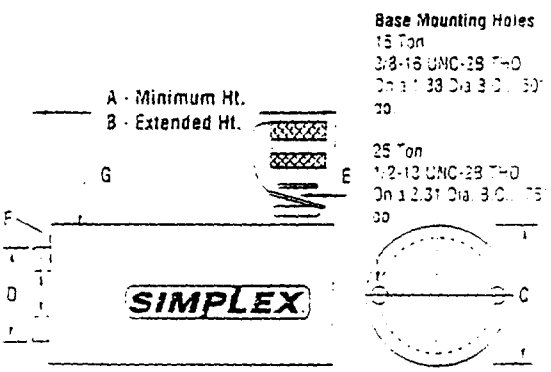

BENEFITS/FEATURES

Simplex 15 & 25 ton R Series rams are the choice when reliability & durability are key. Heavy duty steel construction, plated piston rods & large bronze bearings add up to tough, long lasting cylinders. Ideal for a wide range of applications **at construction sites, mills, power plants, rail car shops & industrial maintenance.**

- 13 Models
- High Flow, quality couplers with metal caps.
- Collar threads designed for full load.
- Base & piston mountings for easy fixturing.
- Removable load caps for flexibility & safety.
- Steel stop ring for piston blow-out protection.
- Plated piston to resist scoring & corrosion.
- Large bearings resist side load.
- Rod wiper protects inner cylinder from dirt.

Spring Return Cylinders 15 & 25 Ton Capacities

Model Number	Cap. (tons)	Stroke (in)	A Min. Ht. (in)	B Ext. Ht. (in)	Ram Bore Dia. (in)	Effect Area (sq in)	Pres. @ Cap. (psi)	Oil Cap. Req'd (cu in)	C Body O.D. (in)	D Piston O.D. (in)	E Base To Port C/L (in)	F Piston I.D. Thrds. (in)	F Piston Thrd. Depth (in)	G Collar Thrds. (in)	G Collar Thrd. Lgth. (in)	Wgt. (lbs)	Sugstd. Hand Pump
R152	15	2	5 7/8	7 7/8	2	3.14	9,554	6.3	2 3/4	1 5/8	3/4	1 x 8	1	2 1/2 x 16	1 3/16	3.3	P42
R154		4	7 7/8	11 7/8				12.5								10.8	
R156		6	10 11/16	16 11/16				19.0								14.5	
R1510		10	14 11/16	24 11/16				31.4								19.5	P140
R1514		14	18 11/16	32 11/16				44.0								24.5	
R251	25	1	5 1/2	6 1/2	2 9/16	5.15	9,700	5.2	3 3/8	2 1/4	1	1 1/2 x 16	1 1/8	3 5/16 x 12	1 15/16	12.0	P42
R252		2	6 1/2	8 1/2				10.3								15.0	
R254		4	8 1/2	12 1/2				20.6								18.0	
R256		6 1/4	10 3/4	17				32.2								23.0	
R258		8 1/4	12 3/4	21				42.5								27.0	P140
R2510		10 1/4	14 3/4	25				52.3								31.0	
R2512		12 1/4	16 3/4	29				63.1								35.0	
R2514		14 1/4	18 3/4	33				73.4								39.0	

COMPARES TO PAGE VI-3

ATTACHMENT VII

SHOP FABRICATION TOLERANCES AND STEEL SET INSTALLATION TOLERANCES

SHOP FABRICATION TOLERANCES :

I. **Source of Shop Fabrication Tolerances**

Tolerances are established based on AISC requirements. ~~and reviewed by the Constructor, based on mining practice and experience (see meeting notes dated March 22, 1994, p. VII-6,7 & 8).~~ MC 7/28/95 Constructor's comments and recommendations were incorporated. Tolerances for structural steel items, along with Constructor's options, will be shown on shop drawings reviewed and accepted by the A/E.

II. **General Requirements for Mill and Fabrication Tolerances**

1. Mill tolerances shall be in accordance with AISC M016-89, p. 1-145 to 1-158, and ASTM A6/A6M

2. FABRICATION tolerances are in accordance with Fabricator's PRACTICES and recommendations for fabricating steel sets and MISCELLANEOUS structural steel. In addition, based on Engineering judgement and observed field conditions, upper bound tolerances for bending & fabrication shall be as follows (also see Section III on next page):

A. **Bending Tolerances** - After bending, *all* steel shapes shall conform to mill tolerances except as allowed below for bounding the upper limits of the tolerances for bending:

- Departure from true template between rib ends - 1/2" max.
- Departure from true template for any one point - 1/4" max. in any gage length of 4'0 max.
- Flange droop - 1/4" max.
- Deviation from flat for web buckling - 3/16" max. within 1/2 beam depth from each end.
- Deviation from nominal beam depth - 1/4" (minus) max.

B. **Fabrication Tolerances** - Tolerances shall not exceed the following upper bounding limits:

- Departure from theoretical plane of face of butt plate - 1/4" max.
- Gap between butt plate and beam end - 1/16" max. for 75% of bearing prior to welding contact. Excess gap filled with weld.
- Tie rod hole spacing in a group - 3/8" max. between holes.

- Tie rod hole group spacing - 3/8" max. from flanges.
- Deviation of sheared plate dimensions from dimension shown - 1/8" plus or minus.
- Deviation of holes within butt plate group - 1/16" max.
- Deviation of butt plate holes after assembly - 1/16" max.

III. GENERAL NOTES AND TOLERANCES FOR FABRICATION DRAWINGS.

Unless otherwise noted, the following notes and tolerances apply to the fabrication of the products called for on the drawings.

1. NOTE: Reference made to mill rolling tolerances below are those tolerances for structural shapes and plates as specified in ASTM A6/A6M

2. Bending Tolerances.

   A. Rib segment assembly shall conform to true template at ends within tolerances stated below. Rib between end plates may depart from true template plus or minus 3/8" provided no point shall depart more than 3/16 in any 3 ft. gage length. The rib shall be of uniform contour.

   B. Flanges shall be true to shape within established mill rolling tolerances except that after bending the outer flange will be permitted to droop 1/8" maximum toward the inner flange.

   C. The web shall be true within established mill rolling tolerances being free of cracks and wrinkles. Where Radii of bend are 14 or more times the beam depth, buckling of the web for a distance of 1/2 the beam depth from each end will be permitted where deviation from flat does not exceed plus or minus 1/8".

   D. Depth of beam at web after bending can be a maximum of 1/4" less than the nominal depth.

   E. Sweep in beams between end plates will be permitted within established mill rolling tolerances.

3. Fabrication Tolerances.

   A. Chord out to out of butt and/or foot plates measured on

centerline of rib to be within plus or minus 1/16" of theoretical length.

B. Face of butt or foot plate after welding to be within plus or minus 1/16" of theoretical plane. Any Burrs or ragged edges on connection plates caused by cutting or punching shall be turned toward the rib segment in assembly.

C. Gap between ends of beams and butt or foot plates prior to welding shall not exceed 1/16" for at least 75% of the cross-sectional area of the beam. Where gaps are in excess of 1/16" they shall be filled by additional welding.

D. Tie rod holes in web of rib segments may be distorted and out of round due to piercing before bending. However, tie rods shall pass freely through the holes. Holes in each pair shall lie within plus or minus 1/4" of the 6" dimension shown. Pairs of tie rod holes shall lie within plus or minus 1/4" of the 31/2" dimension shown from the inside flange. See p. III-4 & III-58 of III-70.

E. Mill rolling tolerances to apply to width of mill edge plates. Width or length of sheared plates to be within plus or minus 1/8" of theoretical dimensions.

F. Center to center of hole dimensions on butt or foot plates to be held within plus or minus 3/64".

G. Groups of holes in butt plates after assembly shall lie within 1/16" of correct location irrespective of the variations which may exist in the beam as a result of allowable tolerances.

H. Camber and sweep permitted in straight structural members not to exceed mill rolling tolerances.

IV. CLARIFICATION

Fabrication tolerance(E): Mill rolling tolerances to apply to width of mill edge plates, width or length of sheared plates to be within plus or minus 1/8" of theoretical dimensions.

Can be translated as follows:

The width of mill edge plate delivered from the mill must fit within the tolerances specified in Page 1-158 of the AISC Steel Manual, 9th Edition. Width of plates that are sheared (cut) ~~by~~ ~~Pantex~~ must be within 1/8" of the design dimension. MC 9/6/95

Examples:

A plate ordered from the mill to be 12" side, 48" long and 3/4" thick, could be 11-13/16" wide to 12-3/16" wide.

A plate sheared by Pantex to 12" wide by 48" long can be a maximum of 12-1/8" wide by 48-1/8" long, and a minimum of 11-7/8" wide by 47-7/8" long.

STEEL SET INSTALLATION TOLERANCES:

MINIMUM EDGE DISTANCE FROM STEEL FOOT PLATE TO SEGMENT JOINTS

P_c = COMPRESSIVE STRESSES IN CONCRETE SEGMENT DUE TO STEEL SET LOADS

TRY 4" MINIMUM DISTANCE FROM EDGE OF STEEL SET FOOT PLATE TO ℄ SEGMENTS JOINT IS ESTABLISHED TO ENSURE THAT THE BOUNDARY LINE FOR P_c DISTRIBUTION SHOULD BE WITHIN THE FIRST LAYER OF REBARS. (SEE THE SKETCHES)

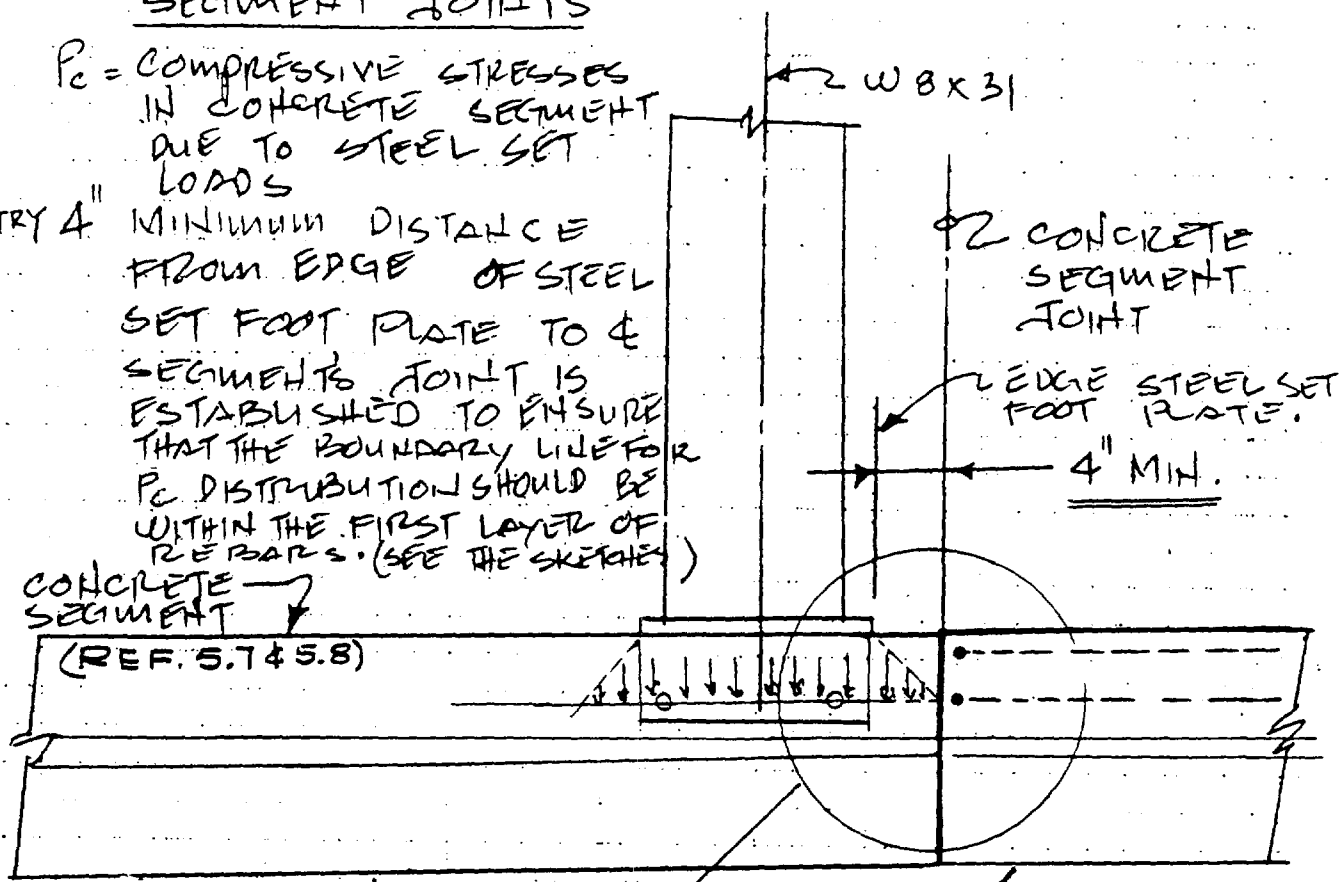

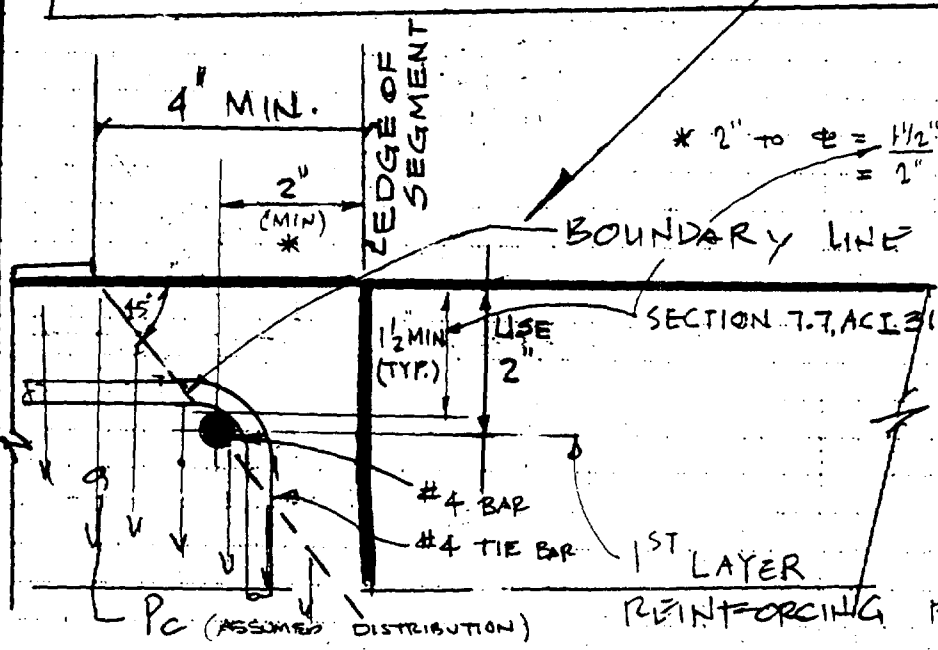

* 2" TO ℄ = 1½" CLR + ¼" (MIN) TIE + ½ (⅝) #4
= 2" MIN TO ℄ #4

BOUNDARY LINE FOR P_c DISTRIBUTION SHOULD BE WITHIN THE 1ST LAYER OF REINFORCING BARS WHICH WILL BE AIDED IN RESISTING SHEAR FAILURE @ CORNER BY #4 TIE BARS.

SECTION 7.7, ACI 318

TUNNEL GRADE :

TUNNEL REQUIRED GRADE = 2.148 % (REF. 5.24). TO INCLUDE TOLERANCE, A 5.0 % BOUNDING GRADE IS USED IN THE FOLLOWING CALCULATIONS FOR INVESTIGATIN THE IMPACT ON STEEL SET DESIGN DUE TO TUNNEL GRADE.

STEEL SETS TO BE POSITIONED ON PRECAST SEGMENTS SUCH THAT THE STEEL END PLATE BEARING SURFACES ARE FLUSH AND IN CONTACT. TO TRANSFER ROCK LOADS THRU STEEL SET BASE PLATE INTO PRECAST CONCRETE CURBS LOCATED ON THE INVERT OF THE TUNNEL.

DIAMETER OF TUNNEL = 7.62 m (REF. 5.20)
BASE THICKNESS OF CONCRETE SEGMENT = 715 mm (REF. 5.8)

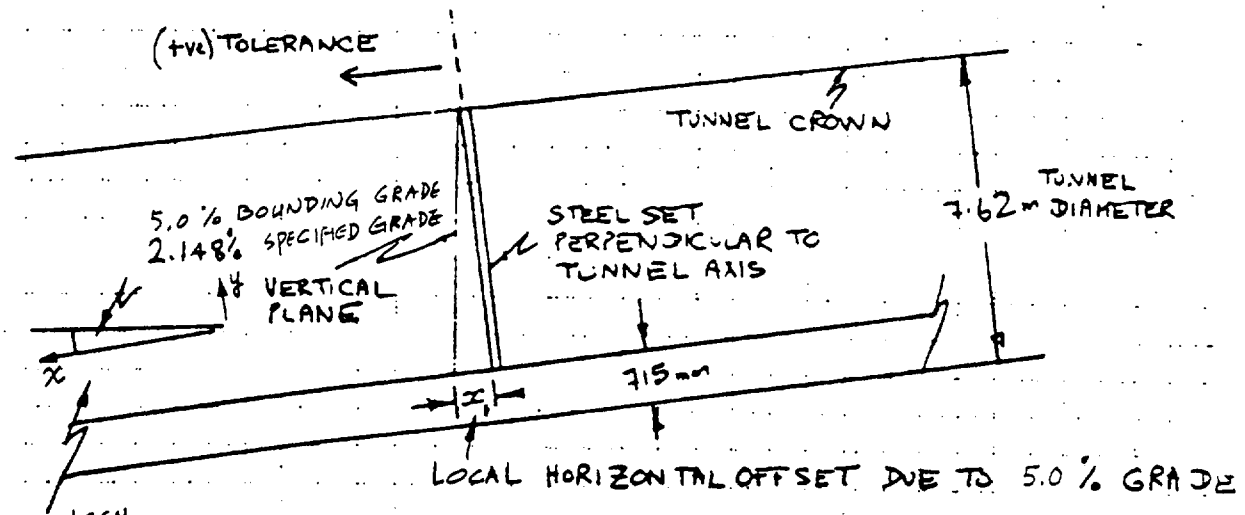

THE LOCAL HORIZONTAL OFF-SET "x_1" FOR A STEEL SET NORMAL TO TUNNEL AT 5.0 % GRADE

$$x_1 = \frac{5.0}{100}(7.62 - 0.715) \times 1000 \text{ mm}$$

$$x_1 = \underline{345 \text{ mm}} \; (\approx \cancel{6.8''}\ 13.6'')$$

MOB 9/11/95

STEEL SET / BEARING PLATE

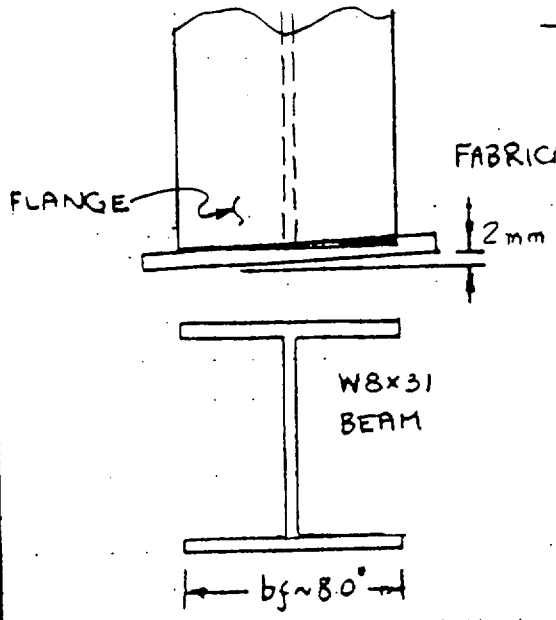

FABRICATION TOLERANCE = 1/16" ---(See Para. II.2.B, pg II-
= 1.588 mm USE 2 mm

VERTICAL OFF-SET INDUCED BY 1mm FABRICATION OFF-SET FROM PERPENDICULAR

$$\frac{1}{203}(7.62-0.715)(1000) = \underline{34.00\,mm} = (x_2)$$

CONCRETE SEGMENT

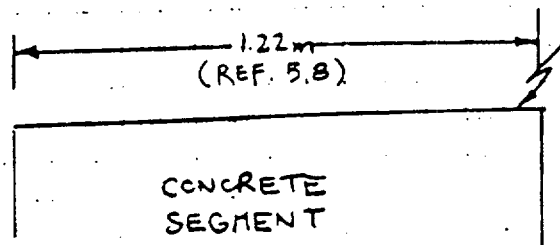

BEARING SURFACE ON EDGE OF SEGMENT **
1/4" = 6.35 mm say 6 mm
5 mm FABRICATION TOLERANCE (Code Ref. 4.4.1, ACI 301.) *
VERTICAL OFF-SET INDUCED BY 6 mm CASTING TOLERANCE

*NOTE: FABRICATION TOLERANCE OF 1/4" FROM REF 5.35, TABLE 4.3.1 IS 1/4" IN 10 FT FOR CAST-IN-PLACE FORMS. THIS VALUE IS CONSERVATIVELY APPLIED HERE AS THE MAXIMUM TOLERANCE ON THE FLATNESS OF THE PRECAST STEEL FORMED INVERT OVER ACROSS ONLY 4 FT.

$$\frac{6\,mm}{1.22\,(1000)}(7.62-0.715)(1000)$$

$$= \underline{34.0\,mm} = (x_3)$$

CUMMULATIVE TOLERANCE

$$\Sigma x = x_1 + x_2 + x_3$$

1. LINE & GRADE @ 5.0% 345.0 mm (x_1)
2. STEEL SET / BEARING PLATE. 34.0 mm (x_2)
3. CONCRETE INVERT SEGMENT. 34.0 mm (x_3)

413.0 mm ≈ (16 1/4")

INSTALLATION TOLERANCE = 16 1/4" (413 mm)

** THESE VALUES ROUNDED DOWN DUE TO CONSERVATISM IN INITIAL VALUE SELECTED (1/4") & UNLIKELYHOOD OF ALL WORST TOLERANCES OCCURRING SIMULTANEOUSL

IMPACT OF CUMMULATIVE OFFSET ON STEEL SET DESIGN:

THE OFFSET OF 16¼" FROM PLUMB AS SHOWN ON PAGE VII-8 OF THIS ATTACHMENT FOR THE STEEL SETS IS BASED ON STEEL FABRICATION TOLERANCE, CONCRETE SEGMENT TOLERANCE AND THE TUNNEL GRADE. THE OFFSET FROM PLUMB COULD CREATE ECCENTRIC LOAD FROM UTILITY WEIGHTS TO STEEL SET AND INDUCE A LOCAL BENDING IN STEEL SET WEB. REFERRING TO FIG. 1 ON THE RIGHT, THE ROCK LOAD IS RESOLVED INTO TWO COMPONENTS. THE PERPENDICULAR TO STEEL SET FLANGE SURFACE COMPONENT IS THE TRUE ROCK PRESSURE ON STEEL SET AND SHOULD INDUCE NO ECCENTRIC LOAD. THE PARALLEL TO STEEL SET FLANGE SURFACE COMPONENT IS SUPPORTED BY THE ROCK ITSELF. THE DESIGN OF STEEL SET USES FULL ROCK, NOT THE COMPONENT, WHICH IS CONSERVATIVE.

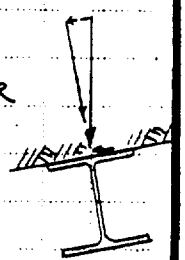

FIG. 1

TO EVALUATE THE IMPACT OF THE CUMULATIVE OFFSET ON STEEL SET DESIGN, A CALCULATION TO OBTAIN THE MAXIMUM STRESS IN W8 x 31 WEB IS SHOWN ON NEXT PAGE. THE MIDDLE SUPPORT OF VENTILATION DUCTS REPRESENTS THE HEAVIEST UTILITY LOAD ON STEEL SET & IS CHOSEN TO DEMONSTRATE THE WORST CONDITION. THE RESULT SHOWS THE MAXIMUM STRESS INDUCED BY CUMULATIVE TOLERANCE IS MUCH LESS THAN ALLOWABLE

STRESS AT CROWN OF STEEL SET INDUCED BY ECCENTRIC LOAD FROM INSTALLATION CUMMULATIVE OFFSET :

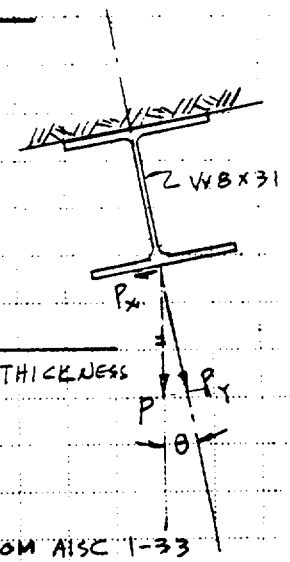

MAXIMUM UTILITY LOAD AT THE CROWN OF STEEL SET SUPPORTING VENTILATION DUCTS

$P = 3.88^k$ ----PAGE II-11, ATTACHMENT II

FOR 413 mm (OR 16 1/4") CUMMULATIVE OFFSET,

ANGLE $\theta \cong \tan^{-1} \dfrac{\text{CUMMULATIVE OFFSET}}{\text{TUNNEL DIAMETER} - \text{CONCRETE SEGMENT THICKNESS}}$

$= \tan^{-1} \dfrac{413^{mm}/1000 - 0.05931}{7.62 - 0.715}$

$= 3.423^\circ$

FROM AISC 1-33
$d = 8''$
$t_w = .285''$
$k = 15/16''$

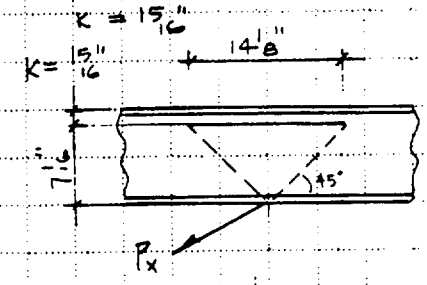

FORCES ACTING AT SUPPORT

$P_Y = P \cos\theta = 3.873^k \cong P = 3.88^k$

$P_x = P \sin\theta = 0.23^k$

P_x WILL INDUCE A LOCAL BENDING IN WB WEB.

SECTION MODULUS OF THE PORTION OF WEB IN BENDING DUE TO P_x

$= \dfrac{b t^2}{6} = 14.125'' \times (0.285)^2/6 = 0.1912 \text{ IN}^3$

$M = 0.23^k \times 7.0625'' = 1.624''^k$

$f_b = \dfrac{1.624}{0.1912} = 8.49^{ksi} << F_b = 0.75 F_y = 27^{ksi}$ --- O.K.
(AISC F2-1)

THE INDUCED STRESS IS WITHIN THE ALLOWABLE STRESS, AND THE ABOVE STRESS IS NOT ADDITIVE TO STEEL SET DESIGN UNITY CHECK. THEREFORE, THE IMPACT OF STEEL SET INSTALLATION TOLERANCES ON STEEL SET DESIGN IS NOT SIGNIFICANT.

ATTACHMENT VIII STRUCTURAL STEEL SET USING W6X20

PURPOSE AND DESCRIPTION

The purpose of the attachment VIII is to verify the capacity of the W6X20 steel shape to withstand jacking operation and long term rock load.

For jacking loads two computer analysis were performed, one with 20 Ton jacking load and another with 17 ton jacking load. The results are that the W6X20 shape is adequate for 17 Ton jacking, but not for 20 Ton jacking. (See "Summary of computer analyses for W6X20 steel shape" at the end of this attachment).

For all inputs used in the computer analyses performed in this attachment, see Attachment I, the 51 degrees runs. The jacking bracket for jacking without insert is situated at 51 degrees with the vertical axis. (See page IX-3).

The configuration from Attachment I can be used in this analysis because the difference in radius is 1" which represents a difference of less than 1% in configuration. From the resulting interaction coefficient for the 17 Ton jack (see page VIII-26), we can conclude that the results are adequate.

W6 x 20. 17 TON JACKING.
BOTH SIDES @ 51°.

CRITICAL MEMBERS: 3, 4, 41 & 42.

$P = 32.2^K$ $M = 15.41^{'K}$ (FROM STZRV3D-17 TON)

UNBRACED LENGTHS.

$L_y = 7.43' = 89.16'' = 35°$ TIE ROD SPACING

L_x = distance between blocking = $4 \times 18.79''$ $\cong 75''$

since $r_x > r_y$, L_x DOES NOT GOVERN FOR COLUMN BUCKLING

ARCH LENGTH FROM SPRINGLINE TO CONCRETE INVERT $= \frac{\pi r A}{180} = \frac{\pi (146)(90° - 31°)}{180}$

ARCH LENGTH $= \frac{\pi \times 146 \times 59}{180} = 150.34266$

MEMBER LENGTH $= \frac{150.34266}{8 (= \text{No. OF MEMBERS})} = 18.79$ in

COMPRESSIVE FLANGE UNBRACED LENGTH -

So $L_x \cong 3.0 \times 18.79'' \cong 56.37''$

SEE MOMENT DIAGRAM - FOR DISTANCE BTWEEN INFLEXION POINTS ≅ 3 MEMBER LENGTHS = UNBRACED COMPRESSIVE FLANGE LENGTH

$\frac{K l_x}{r_x} = \frac{56.37}{2.66} = 21.19$ $F'_e = 332.9$

AISC S-122

DETERMINE ALLOWABLE STRESSES

Fa USE K = 1 - CONSERVATIVELY

$$\frac{KL_y}{r_y} = \frac{89.16}{1.50} = 59.44$$ - CRITICAL BY INSPECTION

$$F_a = 17.49 \text{ ksi}$$ AISC TABLE C-36

Fb

AISC 5-45

$$L_c = \frac{76\, b_f}{\sqrt{F_y}} = \frac{76 \times 6.02}{6} = 76'' \quad (F1\text{-}2)$$

$$F_b = .66 F_y = 36 * .66 = 24 \text{ ksi}$$

(F1-1) -

DETERMINE INTERACTION COEFFICIENT

AISC 5-54

$C_m = 1.0$ AISC pg 5-55

H 1-1 :

$$\frac{f_a}{F_a} + \frac{C_m f_b}{\left(1 - \frac{f_a}{F'_{ex}}\right) F_b} = \frac{5.486}{17.49} + \frac{13.8}{\left(1 - \frac{5.486}{332.9}\right) 24}$$

.983

$$= .3137 + .585$$

$$= .898 < 1.0$$

OK

$$f_a = \frac{32.2}{5.87} = 5.486 \text{ ksi}$$

$$f_b = \frac{15.41 * 12}{13.4} = 13.8 \text{ ksi}$$

H 1-2 : $\frac{f_a}{21.6} + \frac{f_b}{24} = \frac{5.486}{21.6} + \frac{13.8}{24} = .829 < 1$

NOT CRITICAL

CHECK 20 TON JACKS.

CRITICAL MEMBERS 3, 4, 41, 42

$P_{axial} = 37.81^{K}$ $M = 17.6^{'K}$

FROM STR3D. 20 TON JACK

$f_a = \frac{37.81}{5.87} = 6.44^{ksi}$

$f_b = \frac{17.6 \times 12}{13.4} = 15.76^{ksi}$

$F_a = 17.49^{ksi}$
$F_b = 24^{ksi}$
$F_e' = 332.9^{ksi}$

see SHT VIII.2

AISC 5-54 - H1-1.

$$\frac{6.44}{17.49} + \frac{15.76}{\left(1 - \frac{6.44}{332.9}\right)24} = .368 + .67 = 1.038$$

.98

$> 1.$ NG.

HENCE 20T JACK IS TOO HIGH. -

```
**************************************************
*                                                *
*            S T A A D - III                     *
*            Revision 16.0b                      *
*            Proprietary Program of              *
*            RESEARCH ENGINEERS, Inc.            *
*            Date=    SEP 11, 1995               *
*            Time=    13:42:18                   *
*                                                *
**************************************************


STAAD PLANE BABEE0000-01717-0200-00003 ATTACHMENT VIII
* ESF GROUND SUPPORT-STRUCTURAL STEEL ANALYSIS REV 00
* FILE STLRV3D
* 20 TON JACKS APPLIED BOTH SIDES @ 51 DEGREES
* W6X20
UNIT FT KIP
JOINT COORDINATES
3 2.71 2.77 ; 4 2.43 3.13
5 1.58 4.44 ; 6 0.90 5.85 ; 7 0.40 7.33 ; 8 0.10 8.87
9 0.0 10.43 ; 10 0.08 11.79 ; 11 0.31 13.14 ; 12 0.68 14.45
13 1.21 15.71 ; 14 1.86 16.90 ; 15 2.65 18.02 ; 16 3.56 19.03
17 4.58 19.94 ; 18 5.69 20.73 ; 19 6.89 21.39 ; 20 8.15 21.91
21 9.46 22.29 ; 22 10.80 22.52 ; 23 12.17 22.60 ; 24 13.53 22.52
25 14.87 22.29 ; 26 16.18 21.91 ; 27 17.45 21.39 ; 28 18.64 20.73
29 19.75 19.94 ; 30 20.77 19.03 ; 31 21.68 18.02 ; 32 22.47 16.90
33 23.13 15.71 ; 34 23.65 14.45 ; 35 24.03 13.14 ; 36 24.26 11.79
37 24.33 10.43 ; 38 24.23 8.87 ; 39 23.93 7.33 ; 40 23.44 5.85
41 22.76 4.44 ; 42 21.90 3.13 ; 43 21.62 2.77
MEMBER INCIDENCE
3 3 4 42
UNIT KIP INCH
MEMBER PROPERTIES
3 TO 42 TA STA W6X20
CONSTANTS
E 29000.0 ALL
DENSITY 0.00028 ALL
BETA 0 ALL
UNIT FT
SUPPORT
3 7 11 35 39 43 FIXED BUT FY MZ
22 24 FIXED BUT FX MZ
16 30 PINNED
UNIT KIP
LOAD 1
SELF WEIGHT Y -1.0
LOADING 2
* 20 TON JACKS @ BOTH SIDES
* TO OBTAIN LOADS FOR 20 TON JACKS: MULTIPLY
* THE LOADS FOR 25 TON JACKS BY 0.80
* THEN, MULTIPLY MOMENTS BY 5/12 BECAUSE
* EXCENTRICITY IS 5" FOR  W6X20
* 31.47 X .8 = 25.176 K
* 38.86 X .8 = 31.088 K
* 40K X 5"/12 = 16.667 FT K
JOINT LOADING
3 FX -25.176
43 FX 25.176
```

```
48. 3 43 FY 31.088
49. 43 MZ -16.667
50. 3 MZ 16.667
51. LOADING COMBINATION 3
52. 1 2.5 2 1.0
53. PERFORM ANALYSIS

        P R O B L E M   S T A T I S T I C S
        -----------------------------------

  NUMBER OF JOINTS/MEMBER+ELEMENTS/SUPPORTS =    41/   40/   10
  ORIGINAL/FINAL BAND-WIDTH =     1/    1
  TOTAL PRIMARY LOAD CASES  =     2, TOTAL DEGREES OF FREEDOM =   111
  SIZE OF STIFFNESS MATRIX =      666 DOUBLE PREC. WORDS
  TOTAL REQUIRED DISK SPACE =     0.07 MEGA-BYTES

++ PROCESSING ELEMENT STIFFNESS MATRIX.                13:42:21
++ PROCESSING GLOBAL STIFFNESS MATRIX.                 13:42:21
++ PROCESSING TRIANGULAR FACTORIZATION.                13:42:22
++ CALCULATING JOINT DISPLACEMENTS.                    13:42:22
++ CALCULATING MEMBER  FORCES.                         13:42:22

54. LOAD LIST 3
55. PRINT ANALYSIS RESULTS
```

JOINT DISPLACEMENT (INCH RADIANS) STRUCTURE TYPE = PLANE

JOINT	LOAD	X-TRANS	Y-TRANS	Z-TRANS	X-ROTAN	Y-ROTAN	Z-ROTAN
3	3	0.00000	0.08192	0.00000	0.00000	0.00000	0.00474
4	3	-0.01809	0.06631	0.00000	0.00000	0.00000	0.00380
5	3	-0.04977	0.04079	0.00000	0.00000	0.00000	0.00068
6	3	-0.03522	0.04325	0.00000	0.00000	0.00000	-0.00138
7	3	0.00000	0.05094	0.00000	0.00000	0.00000	-0.00102
8	3	0.00240	0.04800	0.00000	0.00000	0.00000	0.00006
9	3	-0.00041	0.04444	0.00000	0.00000	0.00000	0.00002
10	3	0.00129	0.04139	0.00000	0.00000	0.00000	-0.00001
11	3	0.00000	0.03866	0.00000	0.00000	0.00000	0.00077
12	3	-0.02438	0.04216	0.00000	0.00000	0.00000	0.00125
13	3	-0.04181	0.04588	0.00000	0.00000	0.00000	0.00042
14	3	-0.04065	0.04146	0.00000	0.00000	0.00000	-0.00084
15	3	-0.02225	0.02440	0.00000	0.00000	0.00000	-0.00173
16	3	0.00000	0.00000	0.00000	0.00000	0.00000	-0.00135
17	3	0.00747	-0.00918	0.00000	0.00000	0.00000	-0.00038
18	3	0.00726	-0.00984	0.00000	0.00000	0.00000	0.00011
19	3	0.00470	-0.00638	0.00000	0.00000	0.00000	0.00026
20	3	0.00246	-0.00246	0.00000	0.00000	0.00000	0.00021
21	3	0.00122	-0.00026	0.00000	0.00000	0.00000	0.00009
22	3	0.00060	0.00000	0.00000	0.00000	0.00000	0.00003
23	3	0.00001	0.00050	0.00000	0.00000	0.00000	0.00000
24	3	-0.00057	0.00000	0.00000	0.00000	0.00000	-0.00003
25	3	-0.00119	-0.00024	0.00000	0.00000	0.00000	-0.00009
26	3	-0.00242	-0.00242	0.00000	0.00000	0.00000	-0.00021
27	3	-0.00465	-0.00633	0.00000	0.00000	0.00000	-0.00026
28	3	-0.00722	-0.00979	0.00000	0.00000	0.00000	-0.00011
29	3	-0.00745	-0.00916	0.00000	0.00000	0.00000	0.00038
30	3	0.00000	0.00000	0.00000	0.00000	0.00000	0.00135
31	3	0.02221	0.02437	0.00000	0.00000	0.00000	0.00173
32	3	0.04065	0.04146	0.00000	0.00000	0.00000	0.00085
33	3	0.04197	0.04601	0.00000	0.00000	0.00000	-0.00043
34	3	0.02425	0.04229	0.00000	0.00000	0.00000	-0.00125
35	3	0.00000	0.03866	0.00000	0.00000	0.00000	-0.00076
36	3	-0.00141	0.04137	0.00000	0.00000	0.00000	0.00000
37	3	-0.00015	0.04438	0.00000	0.00000	0.00000	-0.00004
38	3	-0.00292	0.04794	0.00000	0.00000	0.00000	-0.00004
39	3	0.00000	0.05078	0.00000	0.00000	0.00000	0.00106
40	3	0.03606	0.04302	0.00000	0.00000	0.00000	0.00141
41	3	0.05073	0.04051	0.00000	0.00000	0.00000	-0.00070
42	3	0.01832	0.06678	0.00000	0.00000	0.00000	-0.00385
43	3	0.00000	0.08257	0.00000	0.00000	0.00000	-0.00479

SUPPORT REACTIONS -UNIT KIP FEET STRUCTURE TYPE = PLANE

JOINT	LOAD	FORCE-X	FORCE-Y	FORCE-Z	MOM-X	MOM-Y	MOM Z
3	3	3.59	0.00	0.00	0.00	0.00	0.00
7	3	21.42	0.00	0.00	0.00	0.00	0.00
11	3	17.06	0.00	0.00	0.00	0.00	0.00
35	3	-17.11	0.00	0.00	0.00	0.00	0.00
39	3	-21.43	0.00	0.00	0.00	0.00	0.00
43	3	-3.56	0.00	0.00	0.00	0.00	0.00
22	3	0.00	-1.48	0.00	0.00	0.00	0.00
24	3	0.00	-1.49	0.00	0.00	0.00	0.00
16	3	-11.12	-28.26	0.00	0.00	0.00	0.00
30	3	11.15	-28.25	0.00	0.00	0.00	0.00

MEMBER END FORCES STRUCTURE TYPE = PLANE

ALL UNITS ARE -- KIP FEET

MEMB	LOAD	JT	AXIAL	SHEAR-Y	SHEAR-Z	TORSION	MOM-Y	MOM-Z
3	3	3	37.79	2.05	0.00	0.00	0.00	-16.67
		4	-37.77	-2.03	0.00	0.00	0.00	17.60
4	3	4	37.81	-1.20	0.00	0.00	0.00	-17.60
		5	-37.75	1.24	0.00	0.00	0.00	15.69
5	3	5	37.29	-5.98	0.00	0.00	0.00	-15.69
		6	-37.22	6.02	0.00	0.00	0.00	6.30
6	3	6	36.19	-10.56	0.00	0.00	0.00	-6.30
		7	-36.12	10.58	0.00	0.00	0.00	-10.21
7	3	7	30.30	5.73	0.00	0.00	0.00	10.21
		8	-30.22	-5.71	0.00	0.00	0.00	-1.23
8	3	8	30.70	1.80	0.00	0.00	0.00	1.23
		9	-30.63	-1.79	0.00	0.00	0.00	1.58
9	3	9	30.62	1.97	0.00	0.00	0.00	1.58
		10	-30.55	-1.97	0.00	0.00	0.00	1.11
10	3	10	30.15	5.31	0.00	0.00	0.00	-1.11
		11	-30.08	-5.30	0.00	0.00	0.00	8.37
11	3	11	33.98	-7.95	0.00	0.00	0.00	-8.37
		12	-33.92	7.97	0.00	0.00	0.00	-2.46
12	3	12	34.64	-3.75	0.00	0.00	0.00	2.46
		13	-34.58	3.77	0.00	0.00	0.00	-7.60
13	3	13	34.78	-0.24	0.00	0.00	0.00	7.60
		14	-34.72	0.27	0.00	0.00	0.00	-7.95
14	3	14	34.53	3.69	0.00	0.00	0.00	7.95
		15	-34.47	-3.65	0.00	0.00	0.00	-2.92
15	3	15	33.80	7.72	0.00	0.00	0.00	2.92
		16	-33.75	-7.68	0.00	0.00	0.00	7.55
16	3	16	5.61	-2.38	0.00	0.00	0.00	-7.55
		17	-5.56	2.43	0.00	0.00	0.00	4.26
17	3	17	5.79	-1.81	0.00	0.00	0.00	-4.26
		18	-5.76	1.86	0.00	0.00	0.00	1.76
18	3	18	5.93	-1.19	0.00	0.00	0.00	-1.76
		19	-5.90	1.25	0.00	0.00	0.00	0.09

MEMBER END FORCES STRUCTURE TYPE = PLANE

ALL UNITS ARE -- KIP FEET

MEMB	LOAD	JT	AXIAL	SHEAR-Y	SHEAR-Z	TORSION	MOM-Y	MOM-Z
19	3	19	6.00	-0.58	0.00	0.00	0.00	-0.09
		20	-5.98	0.64	0.00	0.00	0.00	-0.74
20	3	20	6.01	0.01	0.00	0.00	0.00	0.74
		21	-5.99	0.05	0.00	0.00	0.00	-0.77
21	3	21	5.96	0.62	0.00	0.00	0.00	0.77
		22	-5.95	-0.55	0.00	0.00	0.00	0.03
22	3	22	5.76	-0.27	0.00	0.00	0.00	-0.03
		23	-5.76	0.33	0.00	0.00	0.00	-0.39
23	3	23	5.76	0.34	0.00	0.00	0.00	0.39
		24	-5.76	-0.27	0.00	0.00	0.00	0.03
24	3	24	5.95	-0.55	0.00	0.00	0.00	-0.03
		25	-5.96	0.62	0.00	0.00	0.00	-0.77
25	3	25	5.99	0.05	0.00	0.00	0.00	0.77
		26	-6.01	0.01	0.00	0.00	0.00	-0.74
26	3	26	5.98	0.63	0.00	0.00	0.00	0.74
		27	-6.00	-0.56	0.00	0.00	0.00	0.08
27	3	27	5.90	1.26	0.00	0.00	0.00	-0.08
		28	-5.93	-1.21	0.00	0.00	0.00	1.76
28	3	28	5.76	1.86	0.00	0.00	0.00	-1.76
		29	-5.80	-1.81	0.00	0.00	0.00	4.26
29	3	29	5.56	2.43	0.00	0.00	0.00	-4.26
		30	-5.61	-2.38	0.00	0.00	0.00	7.55
30	3	30	33.77	-7.65	0.00	0.00	0.00	-7.55
		31	-33.82	7.69	0.00	0.00	0.00	-2.88
31	3	31	34.49	-3.62	0.00	0.00	0.00	2.88
		32	-34.55	3.66	0.00	0.00	0.00	-7.88
32	3	32	34.74	0.08	0.00	0.00	0.00	7.88
		33	-34.80	-0.05	0.00	0.00	0.00	-7.79
33	3	33	34.57	4.04	0.00	0.00	0.00	7.79
		34	-34.63	-4.01	0.00	0.00	0.00	-2.30
34	3	34	33.99	7.76	0.00	0.00	0.00	2.30
		35	-34.05	-7.74	0.00	0.00	0.00	8.27
35	3	35	30.08	-5.31	0.00	0.00	0.00	-8.27
		36	-30.15	5.32	0.00	0.00	0.00	0.99

MEMBER END FORCES STRUCTURE TYPE = PLANE

ALL UNITS ARE -- KIP FEET

MEMB	LOAD	JT	AXIAL	SHEAR-Y	SHEAR-Z	TORSION	MOM-Y	MOM-Z
36	3	36	30.56	-1.76	0.00	0.00	0.00	-0.99
		37	-30.63	1.76	0.00	0.00	0.00	-1.41
37	3	37	30.63	-1.78	0.00	0.00	0.00	-1.41
		38	-30.71	1.78	0.00	0.00	0.00	-1.37
38	3	38	30.22	-5.70	0.00	0.00	0.00	1.37
		39	-30.30	5.71	0.00	0.00	0.00	-10.32
39	3	39	36.06	10.83	0.00	0.00	0.00	10.32
		40	-36.14	-10.80	0.00	0.00	0.00	6.53
40	3	40	37.23	6.04	0.00	0.00	0.00	-6.53
		41	-37.30	-6.01	0.00	0.00	0.00	15.96
41	3	41	37.77	1.06	0.00	0.00	0.00	-15.96
		42	-37.83	-1.02	0.00	0.00	0.00	17.59
42	3	42	37.79	-2.01	0.00	0.00	0.00	-17.59
		43	-37.81	2.03	0.00	0.00	0.00	16.67

********** END OF LATEST ANALYSIS RESULT **********

56. CHECK CODE ALL

STAAD-III CODE CHECKING - (AISC)
****

ALL UNITS ARE - KIP FEET (UNLESS OTHERWISE NOTED)

MEMBER	TABLE	RESULT/ FX	CRITICAL COND/ MY	RATIO/ MZ	LOADING/ LOCATION
3	ST W6X 20	PASS	AISC- H1-2	0.963	3
		37.77 C	0.00	17.60	0.46
4	ST W6X 20	PASS	AISC- H1-2	0.964	3
		37.81 C	0.00	-17.60	0.00
5	ST W6X 20	PASS	AISC- H1-2	0.888	3
		37.29 C	0.00	-15.69	0.00
6	ST W6X 20	PASS	AISC- H1-2	0.671	3
		36.12 C	0.00	-10.21	1.56
7	ST W6X 20	PASS	AISC- H1-2	0.625	3
		30.30 C	0.00	10.21	0.00
8	ST W6X 20	PASS	AISC- H1-2	0.301	3
		30.63 C	0.00	1.58	1.56
9	ST W6X 20	PASS	AISC- H1-2	0.301	3
		30.62 C	0.00	1.58	0.00
10	ST W6X 20	PASS	AISC- H1-2	0.554	3
		30.08 C	0.00	8.37	1.37
11	ST W6X 20	PASS	AISC- H1-2	0.585	3
		33.98 C	0.00	-8.37	0.00
12	ST W6X 20	PASS	AISC- H1-2	0.560	3
		34.58 C	0.00	-7.60	1.37
13	ST W6X 20	PASS	AISC- H1-2	0.574	3
		34.72 C	0.00	-7.95	1.36
14	ST W6X 20	PASS	AISC- H1-2	0.573	3
		34.53 C	0.00	7.95	0.00
15	ST W6X 20	PASS	AISC- H1-2	0.552	3
		33.75 C	0.00	7.55	1.36
16	ST W6X 20	PASS	AISC- H1-3	0.331	3
		5.61 C	0.00	-7.55	0.00
17	ST W6X 20	PASS	AISC- H1-3	0.208	3
		5.79 C	0.00	-4.26	0.00
18	ST W6X 20	PASS	AISC- H1-3	0.114	3
		5.93 C	0.00	-1.76	0.00
19	ST W6X 20	PASS	AISC- H1-3	0.076	3
		5.98 C	0.00	-0.74	1.36
20	ST W6X 20	PASS	AISC- H1-3	0.077	3
		5.99 C	0.00	-0.77	1.36
21	ST W6X 20	PASS	AISC- H1-3	0.077	3
		5.96 C	0.00	0.77	0.00
22	ST W6X 20	PASS	AISC- H1-3	0.061	3
		5.76 C	0.00	-0.39	1.37
23	ST W6X 20	PASS	AISC- H1-3	0.061	3
		5.76 C	0.00	0.39	0.00
24	ST W6X 20	PASS	AISC- H1-3	0.077	3
		5.96 C	0.00	-0.77	1.36
25	ST W6X 20	PASS	AISC- H1-3	0.077	3
		5.99 C	0.00	0.77	0.00
26	ST W6X 20	PASS	AISC- H1-3	0.076	3
		5.98 C	0.00	0.74	0.00

L UNITS ARE - KIP FEET (UNLESS OTHERWISE NOTED)

MEMBER	TABLE	RESULT/ FX	CRITICAL COND/ MY	RATIO/ MZ	LOADING/ LOCATION
27	ST W6X 20	PASS	AISC- H1-3	0.114	3
		5.93 C	0.00	1.76	1.36
28	ST W6X 20	PASS	AISC- H1-3	0.208	3
		5.80 C	0.00	4.26	1.36
29	ST W6X 20	PASS	AISC- H1-3	0.331	3
		5.61 C	0.00	7.55	1.37
30	ST W6X 20	PASS	AISC- H1-2	0.552	3
		33.77 C	0.00	-7.55	0.00
31	ST W6X 20	PASS	AISC- H1-2	0.570	3
		34.55 C	0.00	-7.88	1.37
32	ST W6X 20	PASS	AISC- H1-2	0.572	3
		34.74 C	0.00	7.88	0.00
33	ST W6X 20	PASS	AISC- H1-2	0.567	3
		34.57 C	0.00	7.79	0.00
34	ST W6X 20	PASS	AISC- H1-2	0.581	3
		34.05 C	0.00	8.27	1.36
35	ST W6X 20	PASS	AISC- H1-2	0.550	3
		30.08 C	0.00	-8.27	0.00
36	ST W6X 20	PASS	AISC- H1-2	0.295	3
		30.63 C	0.00	-1.41	1.36
37	ST W6X 20	PASS	AISC- H1-2	0.295	3
		30.63 C	0.00	-1.41	0.00
38	ST W6X 20	PASS	AISC- H1-2	0.629	3
		30.30 C	0.00	-10.32	1.57
39	ST W6X 20	PASS	AISC- H1-2	0.675	3
		36.06 C	0.00	10.32	0.00
40	ST W6X 20	PASS	AISC- H1-2	0.898	3
		37.30 C	0.00	15.96	1.57
41	ST W6X 20	PASS	AISC- H1-2	0.964	3
		37.83 C	0.00	17.59	1.57
42	ST W6X 20	PASS	AISC- H1-2	0.963	3
		37.79 C	0.00	-17.59	0.00

********** END OF TABULATED RESULT OF DESIGN **********

57. PLOT DISPLACEMENT FILE
58. PLOT BENDING FILE
59. FINISH

********** END OF STAAD-III **********

DATE= SEP 11,1995 TIME= 13:42:26 ******

```
**********************************************************
*       For questions on STAAD-III/ISDS, contact:        *
*       RESEARCH ENGINEERS, Inc at (714) 974-2500        *
```

```
**************************************************
*                                                *
*            S T A A D - III                     *
*            Revision 16.0b                      *
*            Proprietary Program of              *
*            RESEARCH ENGINEERS, Inc.            *
*            Date=    SEP 11, 1995               *
*            Time=    13:57:37                   *
*                                                *
**************************************************

 1. STAAD PLANE BABEE0000-01717-0200-00003 ATTACHMENT VIII
 2. * ESF GROUND SUPPORT-STRUCTURAL STEEL ANALYSIS REV 00
 3. * FILE STLRV3D
 4. * 17 TON JACKS APPLIED BOTH SIDES @ 51 DEGREES
 5. * W6X20
 6. UNIT FT KIP
 7. JOINT COORDINATES
 8. 3 2.71 2.77 ; 4 2.43 3.13
 9. 5 1.58 4.44 ; 6 0.90 5.85 ; 7 0.40 7.33 ; 8 0.10 8.87
10. 9 0.0 10.43 ; 10 0.08 11.79 ; 11 0.31 13.14 ; 12 0.68 14.45
11. 13 1.21 15.71 ; 14 1.86 16.90 ; 15 2.65 18.02 ; 16 3.56 19.03
12. 17 4.58 19.94 ; 18 5.69 20.73 ; 19 6.89 21.39 ; 20 8.15 21.91
13. 21 9.46 22.29 ; 22 10.80 22.52 ; 23 12.17 22.60 ; 24 13.53 22.52
14. 25 14.87 22.29 ; 26 16.18 21.91 ; 27 17.45 21.39 ; 28 18.64 20.73
15. 29 19.75 19.94 ; 30 20.77 19.03 ; 31 21.68 18.02 ; 32 22.47 16.90
16. 33 23.13 15.71 ; 34 23.65 14.45 ; 35 24.03 13.14 ; 36 24.26 11.79
17. 37 24.33 10.43 ; 38 24.23 8.87 ; 39 23.93 7.33 ; 40 23.44 5.85
18. 41 22.76 4.44 ; 42 21.90 3.13 ; 43 21.62 2.77
19. MEMBER INCIDENCE
20. 3 3 4 42
21. UNIT KIP INCH
22. MEMBER PROPERTIES
23. 3 TO 42 TA STA W6X20
24. CONSTANTS
25. E 29000.0 ALL
26. DENSITY 0.00028 ALL
27. BETA 0 ALL
28. UNIT FT
29. SUPPORT
30. 3 7 11 35 39 43 FIXED BUT FY MZ
31. 22 24 FIXED BUT FX MZ
32. 16 30 PINNED
33. UNIT KIP
34. LOAD 1
35. SELF WEIGHT Y -1.0
36. LOADING 2
37. * 17 TON JACKS @ BOTH SIDES
38. * TO OBTAIN LOADS FOR 17 TON JACKS: MULTIPLY
39. * THE LOADS FOR 20 TON JACKS BY 0.85
40. * THEN, MULTIPLY MOMENTS BY 5/12 BECAUSE
41. * EXCENTRICITY IS 5" FOR  W6X20
42. * 25.176 K X .85 = 21.4 K
43. * 31.088 K X .85 = 26.425 K
44. * 34K X 5"/12 = 14.667 FT K
45. JOINT LOADING
46. 3 FX -21.4
47. 43 FX 21.4
```

```
48. 3 43 FY 26.425
49. 43 MZ -14.667
50. 3 MZ 14.667
51. LOADING COMBINATION 3
52. 1 2.5 2 1.0
53. PERFORM ANALYSIS

      P R O B L E M   S T A T I S T I C S
      -----------------------------------

 NUMBER OF JOINTS/MEMBER+ELEMENTS/SUPPORTS =    41/   40/   10
 ORIGINAL/FINAL BAND-WIDTH =    1/    1
 TOTAL PRIMARY LOAD CASES  =    2, TOTAL DEGREES OF FREEDOM =   111
 SIZE OF STIFFNESS MATRIX =     666 DOUBLE PREC. WORDS
 TOTAL REQUIRED DISK SPACE =    0.07 MEGA-BYTES

++ PROCESSING ELEMENT STIFFNESS MATRIX.              13:57:40
++ PROCESSING GLOBAL STIFFNESS MATRIX.               13:57:41
++ PROCESSING TRIANGULAR FACTORIZATION.              13:57:41
++ CALCULATING JOINT DISPLACEMENTS.                  13:57:41
++ CALCULATING MEMBER  FORCES.                       13:57:42

54. LOAD LIST 3
55. PRINT ANALYSIS RESULTS
```

JOINT DISPLACEMENT (INCH RADIANS) STRUCTURE TYPE = PLANE

JOINT	LOAD	X-TRANS	Y-TRANS	Z-TRANS	X-ROTAN	Y-ROTAN	Z-ROTAN
3	3	0.00000	0.06971	0.00000	0.00000	0.00000	0.00413
4	3	-0.01575	0.05615	0.00000	0.00000	0.00000	0.00331
5	3	-0.04322	0.03410	0.00000	0.00000	0.00000	0.00059
6	3	-0.03055	0.03632	0.00000	0.00000	0.00000	-0.00120
7	3	0.00000	0.04307	0.00000	0.00000	0.00000	-0.00089
8	3	0.00230	0.04063	0.00000	0.00000	0.00000	0.00004
9	3	-0.00010	0.03760	0.00000	0.00000	0.00000	0.00003
10	3	0.00122	0.03503	0.00000	0.00000	0.00000	0.00000
11	3	0.00000	0.03274	0.00000	0.00000	0.00000	0.00065
12	3	-0.02067	0.03571	0.00000	0.00000	0.00000	0.00106
13	3	-0.03541	0.03885	0.00000	0.00000	0.00000	0.00036
14	3	-0.03442	0.03510	0.00000	0.00000	0.00000	-0.00071
15	3	-0.01884	0.02066	0.00000	0.00000	0.00000	-0.00147
16	3	0.00000	0.00000	0.00000	0.00000	0.00000	-0.00115
17	3	0.00634	-0.00780	0.00000	0.00000	0.00000	-0.00033
18	3	0.00618	-0.00839	0.00000	0.00000	0.00000	0.00009
19	3	0.00402	-0.00548	0.00000	0.00000	0.00000	0.00022
20	3	0.00212	-0.00216	0.00000	0.00000	0.00000	0.00018
21	3	0.00105	-0.00026	0.00000	0.00000	0.00000	0.00008
22	3	0.00051	0.00000	0.00000	0.00000	0.00000	0.00003
23	3	0.00001	0.00044	0.00000	0.00000	0.00000	0.00000
24	3	-0.00049	0.00000	0.00000	0.00000	0.00000	-0.00003
25	3	-0.00103	-0.00025	0.00000	0.00000	0.00000	-0.00008
26	3	-0.00208	-0.00212	0.00000	0.00000	0.00000	-0.00018
27	3	-0.00398	-0.00544	0.00000	0.00000	0.00000	-0.00022
28	3	-0.00614	-0.00835	0.00000	0.00000	0.00000	-0.00009
29	3	-0.00632	-0.00778	0.00000	0.00000	0.00000	0.00033
30	3	0.00000	0.00000	0.00000	0.00000	0.00000	0.00114
31	3	0.01881	0.02063	0.00000	0.00000	0.00000	0.00147
32	3	0.03442	0.03510	0.00000	0.00000	0.00000	0.00072
33	3	0.03556	0.03896	0.00000	0.00000	0.00000	-0.00036
34	3	0.02056	0.03581	0.00000	0.00000	0.00000	-0.00106
35	3	0.00000	0.03273	0.00000	0.00000	0.00000	-0.00065
36	3	-0.00132	0.03501	0.00000	0.00000	0.00000	-0.00001
37	3	-0.00038	0.03755	0.00000	0.00000	0.00000	-0.00004
38	3	-0.00275	0.04058	0.00000	0.00000	0.00000	-0.00003
39	3	0.00000	0.04293	0.00000	0.00000	0.00000	0.00092
40	3	0.03127	0.03613	0.00000	0.00000	0.00000	0.00123
41	3	0.04403	0.03386	0.00000	0.00000	0.00000	-0.00060
42	3	0.01594	0.05656	0.00000	0.00000	0.00000	-0.00335
43	3	0.00000	0.07027	0.00000	0.00000	0.00000	-0.00418

SUPPORT REACTIONS -UNIT KIP FEET STRUCTURE TYPE = PLANE

JOINT	LOAD	FORCE-X	FORCE-Y	FORCE-Z	MOM-X	MOM-Y	MOM Z
3	3	2.93	0.00	0.00	0.00	0.00	0.00
7	3	18.36	0.00	0.00	0.00	0.00	0.00
11	3	14.40	0.00	0.00	0.00	0.00	0.00
35	3	-14.45	0.00	0.00	0.00	0.00	0.00
39	3	-18.37	0.00	0.00	0.00	0.00	0.00
43	3	-2.90	0.00	0.00	0.00	0.00	0.00
22	3	0.00	-1.24	0.00	0.00	0.00	0.00
24	3	0.00	-1.24	0.00	0.00	0.00	0.00
16	3	-9.36	-23.84	0.00	0.00	0.00	0.00
30	3	9.39	-23.84	0.00	0.00	0.00	0.00

MEMBER END FORCES STRUCTURE TYPE = PLANE

ALL UNITS ARE -- KIP FEET

MEMB	LOAD	JT	AXIAL	SHEAR-Y	SHEAR-Z	TORSION	MOM-Y	MOM-Z
3	3	3	32.20	1.64	0.00	0.00	0.00	-14.67
		4	-32.18	-1.63	0.00	0.00	0.00	15.41
4	3	4	32.20	-1.13	0.00	0.00	0.00	-15.41
		5	-32.14	1.17	0.00	0.00	0.00	13.62
5	3	5	31.74	-5.20	0.00	0.00	0.00	-13.62
		6	-31.67	5.24	0.00	0.00	0.00	5.45
6	3	6	30.78	-9.10	0.00	0.00	0.00	-5.45
		7	-30.71	9.13	0.00	0.00	0.00	-8.79
7	3	7	25.71	4.89	0.00	0.00	0.00	8.79
		8	-25.63	-4.88	0.00	0.00	0.00	-1.13
8	3	8	26.05	1.55	0.00	0.00	0.00	1.13
		9	-25.97	-1.55	0.00	0.00	0.00	1.30
9	3	9	25.97	1.64	0.00	0.00	0.00	1.30
		10	-25.90	-1.64	0.00	0.00	0.00	0.94
10	3	10	25.56	4.47	0.00	0.00	0.00	-0.94
		11	-25.50	-4.46	0.00	0.00	0.00	7.05
11	3	11	28.79	-6.71	0.00	0.00	0.00	-7.05
		12	-28.73	6.73	0.00	0.00	0.00	-2.10
12	3	12	29.34	-3.16	0.00	0.00	0.00	2.10
		13	-29.27	3.19	0.00	0.00	0.00	-6.44
13	3	13	29.45	-0.20	0.00	0.00	0.00	6.44
		14	-29.39	0.23	0.00	0.00	0.00	-6.73
14	3	14	29.22	3.13	0.00	0.00	0.00	6.73
		15	-29.17	-3.09	0.00	0.00	0.00	-2.47
15	3	15	28.59	6.53	0.00	0.00	0.00	2.47
		16	-28.54	-6.49	0.00	0.00	0.00	6.38
16	3	16	4.81	-2.01	0.00	0.00	0.00	-6.38
		17	-4.77	2.06	0.00	0.00	0.00	3.60
17	3	17	4.97	-1.52	0.00	0.00	0.00	-3.60
		18	-4.93	1.58	0.00	0.00	0.00	1.49
18	3	18	5.08	-1.00	0.00	0.00	0.00	-1.49
		19	-5.04	1.06	0.00	0.00	0.00	0.09

MEMBER END FORCES STRUCTURE TYPE = PLANE

ALL UNITS ARE -- KIP FEET

MEMB	LOAD	JT	AXIAL	SHEAR-Y	SHEAR-Z	TORSION	MOM-Y	MOM-Z
19	3	19	5.13	-0.49	0.00	0.00	0.00	-0.09
		20	-5.10	0.55	0.00	0.00	0.00	-0.62
20	3	20	5.13	0.01	0.00	0.00	0.00	0.62
		21	-5.12	0.06	0.00	0.00	0.00	-0.65
21	3	21	5.09	0.52	0.00	0.00	0.00	0.65
		22	-5.08	-0.45	0.00	0.00	0.00	0.01
22	3	22	4.92	-0.22	0.00	0.00	0.00	-0.01
		23	-4.92	0.29	0.00	0.00	0.00	-0.34
23	3	23	4.92	0.29	0.00	0.00	0.00	0.34
		24	-4.92	-0.22	0.00	0.00	0.00	0.01
24	3	24	5.08	-0.45	0.00	0.00	0.00	-0.01
		25	-5.09	0.52	0.00	0.00	0.00	-0.65
25	3	25	5.12	0.05	0.00	0.00	0.00	0.65
		26	-5.13	0.01	0.00	0.00	0.00	-0.62
26	3	26	5.11	0.53	0.00	0.00	0.00	0.62
		27	-5.13	-0.47	0.00	0.00	0.00	0.08
27	3	27	5.04	1.07	0.00	0.00	0.00	-0.08
		28	-5.07	-1.01	0.00	0.00	0.00	1.49
28	3	28	4.93	1.57	0.00	0.00	0.00	-1.49
		29	-4.97	-1.52	0.00	0.00	0.00	3.60
29	3	29	4.77	2.06	0.00	0.00	0.00	-3.60
		30	-4.82	-2.01	0.00	0.00	0.00	6.38
30	3	30	28.56	-6.46	0.00	0.00	0.00	-6.38
		31	-28.61	6.51	0.00	0.00	0.00	-2.44
31	3	31	29.18	-3.06	0.00	0.00	0.00	2.44
		32	-29.24	3.10	0.00	0.00	0.00	-6.66
32	3	32	29.40	0.07	0.00	0.00	0.00	6.66
		33	-29.46	-0.03	0.00	0.00	0.00	-6.60
33	3	33	29.26	3.41	0.00	0.00	0.00	6.60
		34	-29.32	-3.39	0.00	0.00	0.00	-1.96
34	3	34	28.78	6.56	0.00	0.00	0.00	1.96
		35	-28.85	-6.54	0.00	0.00	0.00	6.97
35	3	35	25.49	-4.47	0.00	0.00	0.00	-6.97
		36	-25.56	4.48	0.00	0.00	0.00	0.84

MEMBER END FORCES STRUCTURE TYPE = PLANE

ALL UNITS ARE -- KIP FEET

MEMB	LOAD	JT	AXIAL	SHEAR-Y	SHEAR-Z	TORSION	MOM-Y	MOM-Z
36	3	36	25.91	-1.46	0.00	0.00	0.00	-0.84
		37	-25.98	1.47	0.00	0.00	0.00	-1.16
37	3	37	25.97	-1.54	0.00	0.00	0.00	-1.16
		38	-26.05	1.54	0.00	0.00	0.00	-1.25
38	3	38	25.64	-4.86	0.00	0.00	0.00	1.25
		39	-25.71	4.88	0.00	0.00	0.00	-8.89
39	3	39	30.66	9.33	0.00	0.00	0.00	8.89
		40	-30.73	-9.31	0.00	0.00	0.00	5.64
40	3	40	31.68	5.26	0.00	0.00	0.00	-5.64
		41	-31.75	-5.22	0.00	0.00	0.00	13.85
41	3	41	32.16	1.01	0.00	0.00	0.00	-13.85
		42	-32.22	-0.97	0.00	0.00	0.00	15.40
42	3	42	32.20	-1.61	0.00	0.00	0.00	-15.40
		43	-32.21	1.62	0.00	0.00	0.00	14.67

********** END OF LATEST ANALYSIS RESULT **********

56. CHECK CODE ALL

STAAD-III CODE CHECKING - (AISC)
****

ALL UNITS ARE - KIP FEET (UNLESS OTHERWISE NOTED)

MEMBER	TABLE	RESULT/ FX	CRITICAL COND/ MY	RATIO/ MZ	LOADING/ LOCATION
3	ST W6X 20	PASS	AISC- H1-2	0.837	3
		32.18 C	0.00	15.41	0.46
4	ST W6X 20	PASS	AISC- H1-2	0.837	3
		32.20 C	0.00	-15.41	0.00
5	ST W6X 20	PASS	AISC- H1-2	0.765	3
		31.74 C	0.00	-13.62	0.00
6	ST W6X 20	PASS	AISC- H1-2	0.575	3
		30.71 C	0.00	-8.79	1.56
7	ST W6X 20	PASS	AISC- H1-2	0.535	3
		25.71 C	0.00	8.79	0.00
8	ST W6X 20	PASS	AISC- H1-2	0.254	3
		25.97 C	0.00	1.30	1.56
9	ST W6X 20	PASS	AISC- H1-2	0.254	3
		25.97 C	0.00	1.30	0.00
10	ST W6X 20	PASS	AISC- H1-2	0.468	3
		25.50 C	0.00	7.05	1.37
11	ST W6X 20	PASS	AISC- H1-2	0.494	3
		28.79 C	0.00	-7.05	0.00
12	ST W6X 20	PASS	AISC- H1-2	0.474	3
		29.27 C	0.00	-6.44	1.37
13	ST W6X 20	PASS	AISC- H1-2	0.486	3
		29.39 C	0.00	-6.73	1.36
14	ST W6X 20	PASS	AISC- H1-2	0.485	3
		29.22 C	0.00	6.73	0.00
15	ST W6X 20	PASS	AISC- H1-2	0.466	3
		28.54 C	0.00	6.38	1.36
16	ST W6X 20	PASS	AISC- H1-3	0.280	3
		4.81 C	0.00	-6.38	0.00
17	ST W6X 20	PASS	AISC- H1-3	0.176	3
		4.97 C	0.00	-3.60	0.00
18	ST W6X 20	PASS	AISC- H1-3	0.097	3
		5.08 C	0.00	-1.49	0.00
19	ST W6X 20	PASS	AISC- H1-3	0.065	3
		5.10 C	0.00	-0.62	1.36
20	ST W6X 20	PASS	AISC- H1-3	0.066	3
		5.12 C	0.00	-0.65	1.36
21	ST W6X 20	PASS	AISC- H1-3	0.066	3
		5.09 C	0.00	0.65	0.00
22	ST W6X 20	PASS	AISC- H1-3	0.052	3
		4.92 C	0.00	-0.34	1.37
23	ST W6X 20	PASS	AISC- H1-3	0.052	3
		4.92 C	0.00	0.34	0.00
24	ST W6X 20	PASS	AISC- H1-3	0.066	3
		5.09 C	0.00	-0.65	1.36
25	ST W6X 20	PASS	AISC- H1-3	0.066	3
		5.12 C	0.00	0.65	0.00
26	ST W6X 20	PASS	AISC- H1-3	0.065	3
		5.11 C	0.00	0.62	0.00

L UNITS ARE - KIP FEET (UNLESS OTHERWISE NOTED)

MEMBER	TABLE	RESULT/ FX	CRITICAL COND/ MY	RATIO/ MZ	LOADING/ LOCATION
27	ST W6X 20	PASS	AISC- H1-3	0.097	3
		5.07 C	0.00	1.49	1.36
28	ST W6X 20	PASS	AISC- H1-3	0.176	3
		4.97 C	0.00	3.60	1.36
29	ST W6X 20	PASS	AISC- H1-3	0.280	3
		4.82 C	0.00	6.38	1.37
30	ST W6X 20	PASS	AISC- H1-2	0.466	3
		28.56	0.00	-6.38	0.00
31	ST W6X 20	PASS	AISC- H1-2	0.483	3
		29.24 C	0.00	-6.66	1.37
32	ST W6X 20	PASS	AISC- H1-2	0.484	3
		29.40 C	0.00	6.66	0.00
33	ST W6X 20	PASS	AISC- H1-2	0.480	3
		29.26 C	0.00	6.60	0.00
34	ST W6X 20	PASS	AISC- H1-2	0.491	3
		28.85 C	0.00	6.97	1.36
35	ST W6X 20	PASS	AISC- H1-2	0.465	3
		25.49 C	0.00	-6.97	0.00
36	ST W6X 20	PASS	AISC- H1-2	0.249	3
		25.98 C	0.00	-1.16	1.36
37	ST W6X 20	PASS	AISC- H1-2	0.253	3
		26.05 C	0.00	-1.25	1.56
38	ST W6X 20	PASS	AISC- H1-2	0.539	3
		25.71 C	0.00	-8.89	1.57
39	ST W6X 20	PASS	AISC- H1-2	0.578	3
		30.66 C	0.00	8.89	0.00
40	ST W6X 20	PASS	AISC- H1-2	0.774	3
		31.75 C	0.00	13.85	1.57
41	ST W6X 20	PASS	AISC- H1-2	0.837	3
		32.22 C	0.00	15.40	1.57
42	ST W6X 20	PASS	AISC- H1-2	0.836	3
		32.20 C	0.00	-15.40	0.00

********** END OF TABULATED RESULT OF DESIGN **********

57. PLOT DISPLACEMENT FILE
58. PLOT BENDING FILE
59. FINISH

********** END OF STAAD-III **********

DATE= SEP 11,1995 TIME= 13:57:46 ******

```
**********************************************************
*       For questions on STAAD-III/ISDS, contact:        *
*       RESEARCH ENGINEERS, Inc at (714) 974-2500        *
```

TITLE: ESF Ground Support - Structural Steel Analysis

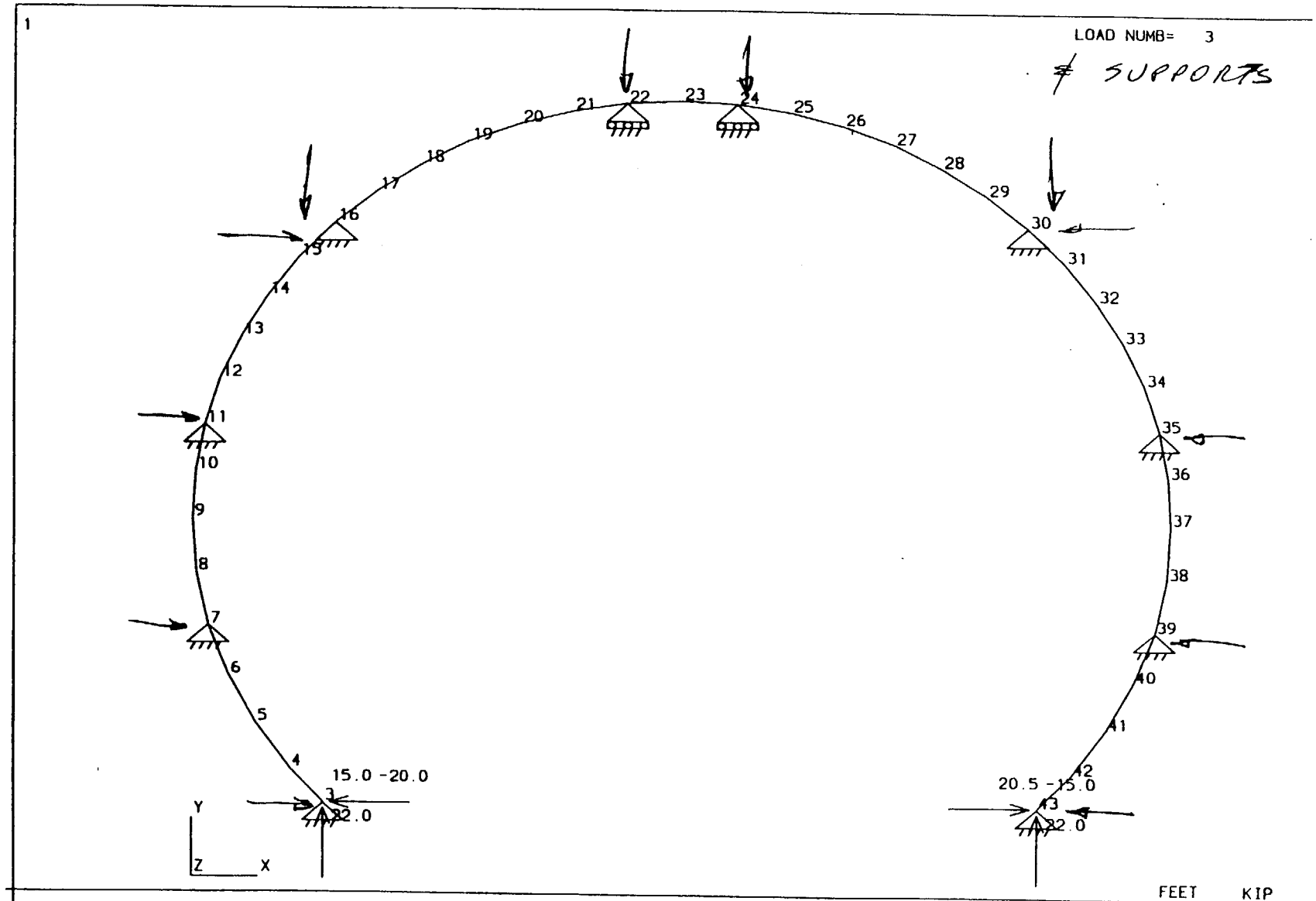

COMPANY: M&O
DATE: JUN 30, 1995

S T A A D P L - P L O T (REVISION 16.0)
TITLE: BABEE0000-01717-0200-00003 REV.00
STRUCTURE DATA NJ= 41, NM= 40, NE= 0

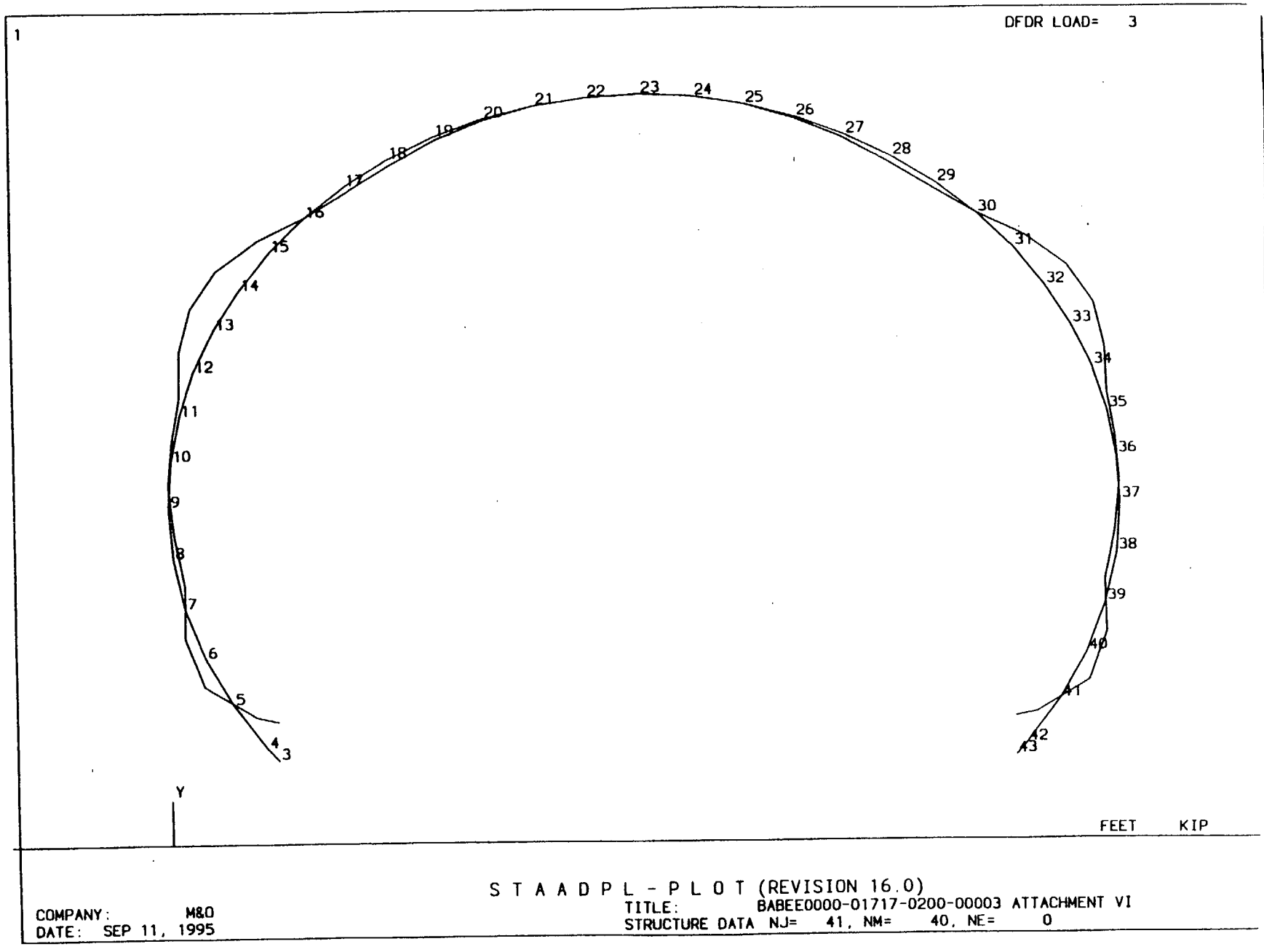
1
DFDR LOAD= 3
1 2 3 4 5 6 7 8 9 10 11 12 13 14 15 16 17 18 19 20 21 22 23 24 25 26 27 28 29 30 31 32 33 34 35 36 37 38 39 40 41 42 43
Y
FEET KIP
S T A A D P L - P L O T (REVISION 16.0)
TITLE: BABEE0000-01717-0200-00003 ATTACHMENT VI
STRUCTURE DATA NJ= 41, NM= 40, NE= 0
COMPANY: M&O
DATE: SEP 11, 1995

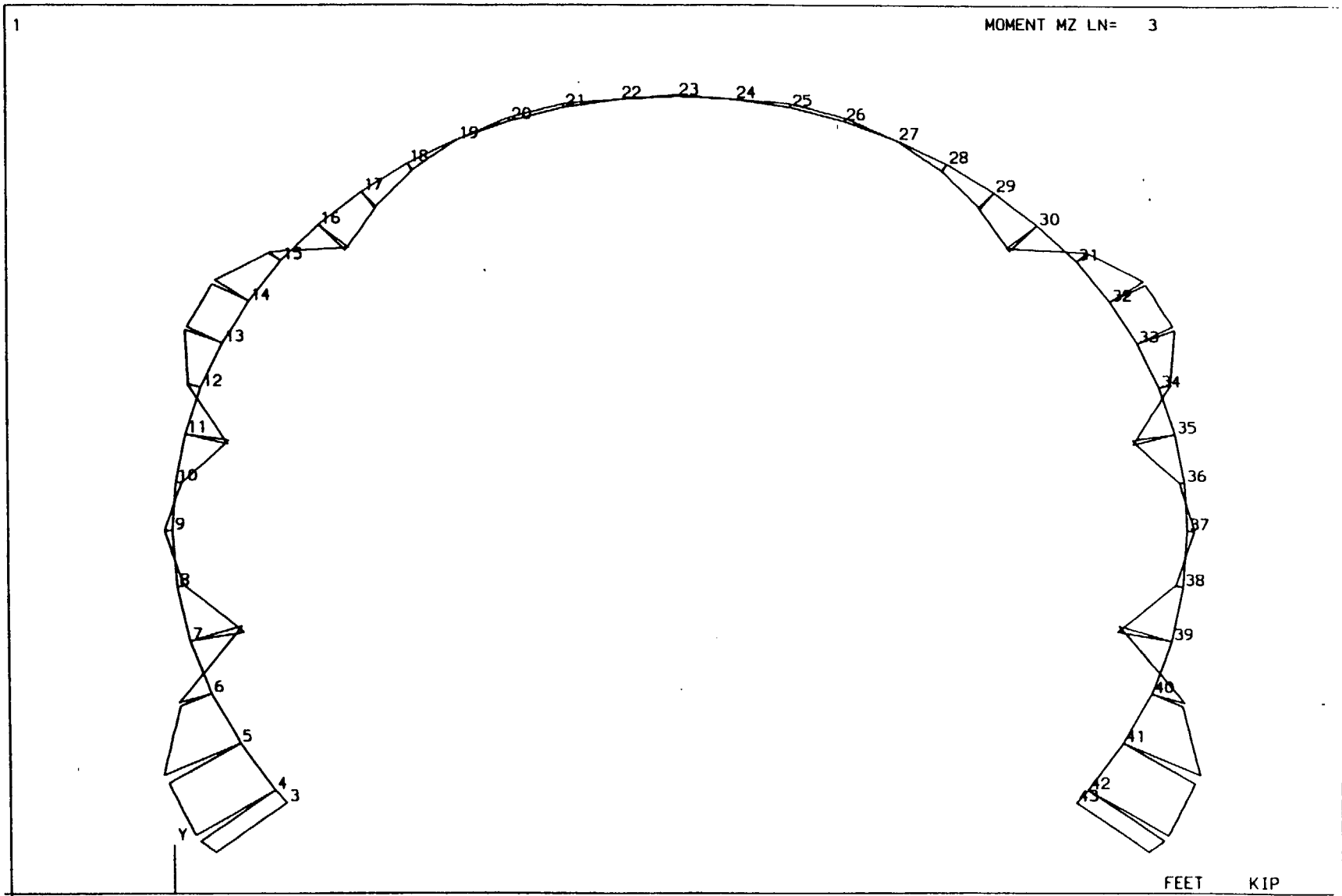

S T A A D P L - P L O T (REVISION 16.0)

COMPANY: M&O
DATE: SEP 11, 1995

TITLE: BABEE0000-01717-0200-00003 ATTACHMENT VI
STRUCTURE DATA NJ= 41, NM= 40, NE= 0

SUMMARY OF COMPUTER ANALYSES FOR W6X20 STEEL SHAPE

Analysis No.	LOAD	SCOPE	INTERACTION COEFFICIENT Computer	Hand calc's	MEMBER	CONCLUSIONS
1. STLRV3 20 TONS	20 TON JACK	)Determine)W6X20)Jack	0.964	1.038	3,4,41,42	W6X20 is not adequate for 20 T jack
2. STLRV3 17 TONS	17 TON JACK	)capacity)	0.837	0.898	3,4,41,42	W6X20 is adequate for 17 T jack

ATTACHMENT VIII

CONCLUSIONS

The conclusions of the analyses performed in attachment VIII are:

1. The W6X20 steel shape is adequate for a 17 Ton jacking force, but not for a 20 Ton jacking force.

ATTACHMENT IX — SUMMARY OF DESIGN SKETCHES

GENERAL NOTES :

<1> ALL MATERIALS USED IN ENGINEERING CALCULATIONS FOR ESF GROUND SUPPORT — STRUCTURAL STEEL ANALYSIS AND DESIGN SHALL BE AS SPECIFIED IN THE FOLLOWING UNLESS NOTED OTHERWISE :

ITEM	DESIGNATION	CRITICAL CHARACTERISTIC OF MATERIAL
a. STRUCTURAL STEEL SHAPES AND PLATES	ASTM A36	58^{KSI} MINIMUM TENSILE STRENGTH 36^{KSI} MINIMUM YIELD STRENGTH
b. HIGH STRENGTH BOLTS	ASTM A325 TYPE 1	120^{KSI} MINIMUM TENSILE STRENGTH 92^{KSI} MINIMUM YIELD STRENGTH.
HIGH STRENGTH NUTS	ASTM A563 HEAVY HEX GRADE DH	175^{KSI} PROOF LOAD STRESS.
c. UNFINISHED BOLTS	ASTM A307 GRADE A OR GRADE C	58^{KSI} MINIMUM TENSILE STRENGTH
TIE RODS	ASTM A307 GRADE C	58^{KSI} MINIMUM TENSILE STRENGTH.
UNFINISHED NUTS	ASTM A563 HEAVY HEX GRADE DH	175^{KSI} PROOF LOAD STRESS.
WASHERS	ASTM F436 TYPE 1	HARDNESS 38 TO 45 HRC MINIMUM.
d. STRUCTURAL PIPES	ASTM A53 GRADE B OR ASTM A106 GRADE B	35^{KSI} MINIMUM YIELD STRENGTH. 35^{KSI} MINIMUM YIELD STRENGTH.
e. WELDING	AWS A5.1 E70XX OR AWS A5.20 E7XT	70^{KSI} MINIMUM TENSILE STRENGTH 72^{KSI} MINIMUM TENSILE STRENGTH.
f. SHIM PLATE	ASTM A36 OR ASTM A570 GRADE 36 OR ASTM A606	36^{KSI} MINIMUM YIELD STRENGTH. 36^{KSI} MINIMUM YIELD STRENGTH. 45^{KSI} MINIMUM YIELD STRENGTH.
g. STRUCTURAL TUBING	ASTM A500 GRADE B	42^{KSI} MINIMUM YIELD STRENGTH
h. CONCRETE		$f'_c = 5000^{PSI}$

(2) THE DESIGN SKETCHES CONTAINED IN THIS ATTACHMENT ARE THE ESF GROUND SUPPORT STRUCTURAL STEEL SET SUMMARY INCLUDING SUPPORT COMPONENTS AND CONNECTION DETAILS. THE FABRICATOR AND/OR CONSTRUCTOR MAY MODIFY THE CONFIGURATION OR DETAILS SHOWN IF THE MODIFICATION WILL RESULT IN SIGNIFICANT OVERALL COST SAVING. THE MODIFICATION MAY ALSO BE DONE AT THE DISCRE N OF THE CONSTRUCTOR TO FACILITATE STEEL SET ASSEMBLY, EREC) AND INSTALLATION. THE CONTRUCTOR SHALL SUBMIT ANY MODIFIC ON FOR A/E REVIEW AND APPROVAL. HOWEVER, THE FOLLOWING ITEMS ARE NOT SUBJECT TO MODIFICATION:

a. STRUCTURAL STEEL SHAPES FOR RING BEAMS AND LAGGING.
b. NORMINAL TUNNEL DIAMETER.
c. STEEL SET SPACING.
d. INVERT SEGMENT FOUNDATION CURB CONFIGURATION.

(3) CONNECTIONS FOR UTILITY SUPPORT BRACKET TO STEEL SET SHALL BE BOLTED AND THE BOLT HOLES IN STEEL SET SHALL BE FIELD DRILLED.

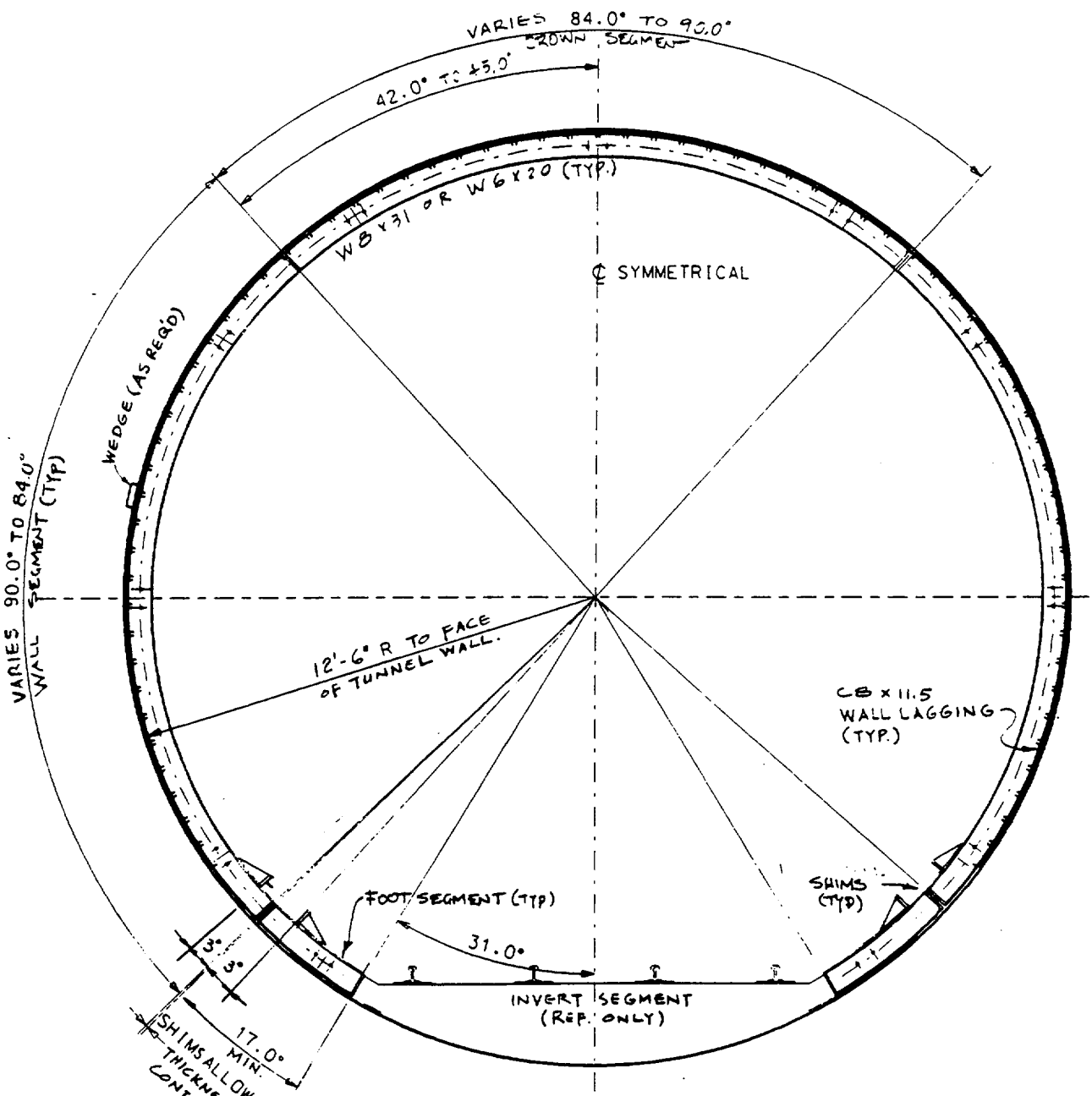

NOTE 1: VARIATION IN THE ANGLE OF THE SUBTENDED ARC AND THE RELATED ARC LENGTH SHALL BE AT THE CONTRACTOR'S OPTION.

NOTE 2: FOR SOURCE OF DIMENSIONS, ANGLES & STEEL SET CONFIGURATION SEE SECTION 4.1.4, THIS ANALYSIS.

STEEL SET DIMENSIONS

ALTERNATE I *

* (LONGER FOOT SEGMENT & NO INSERT, SHIMS ONLY)

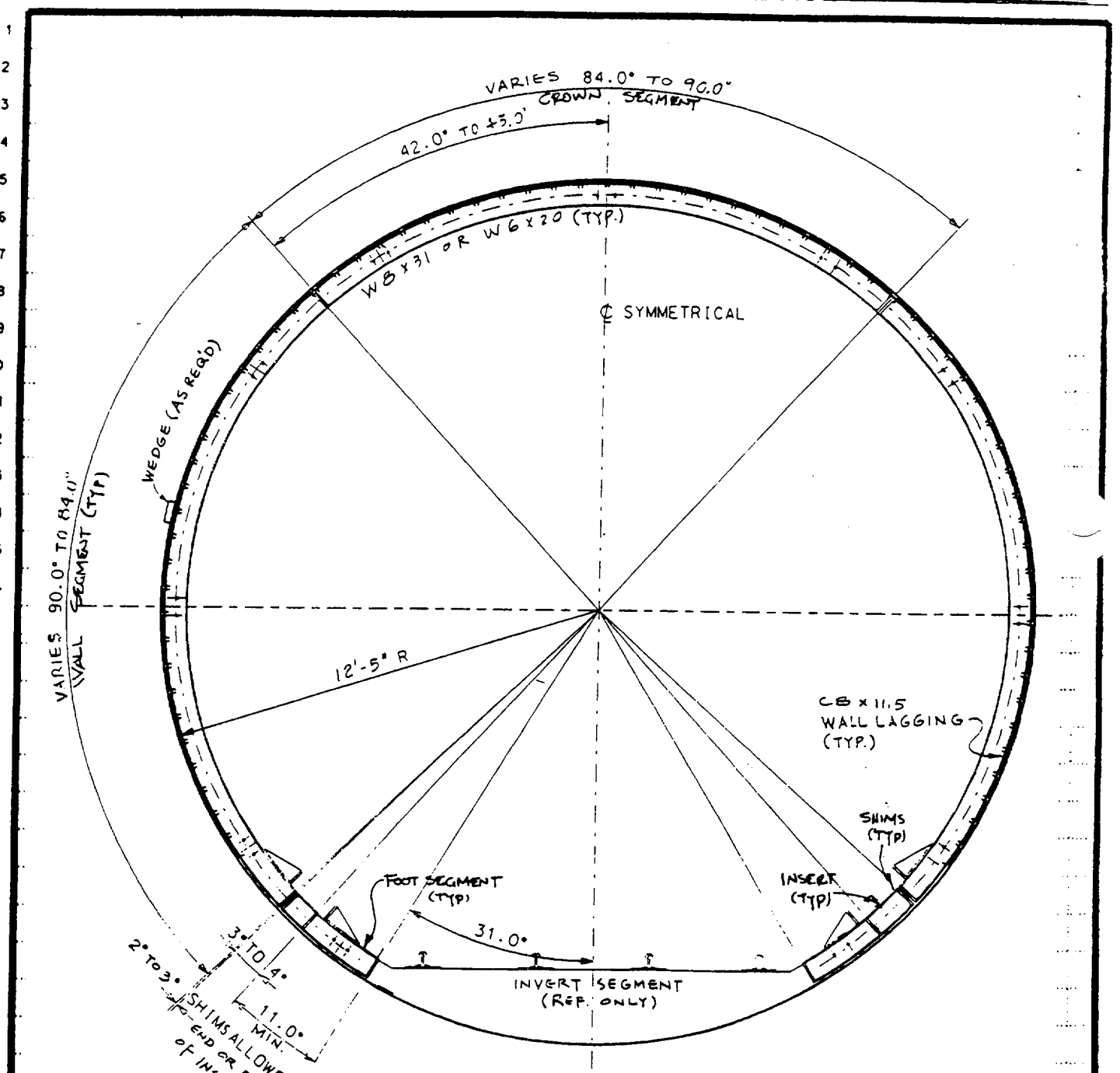

NOTE: VARIATION IN THE ANGLE OF THE SUBTENDED ARC AND THE RELATED ARC LENGTH SHALL BE AT THE CONTRACTOR'S OPTION.

STEEL SET DIMENSIONS

ALTERNATE III *

* (SHORTER FOOT SEGMENT, INSERT & SHIMS = PREVIOUS DESIGN, REF 5.6)

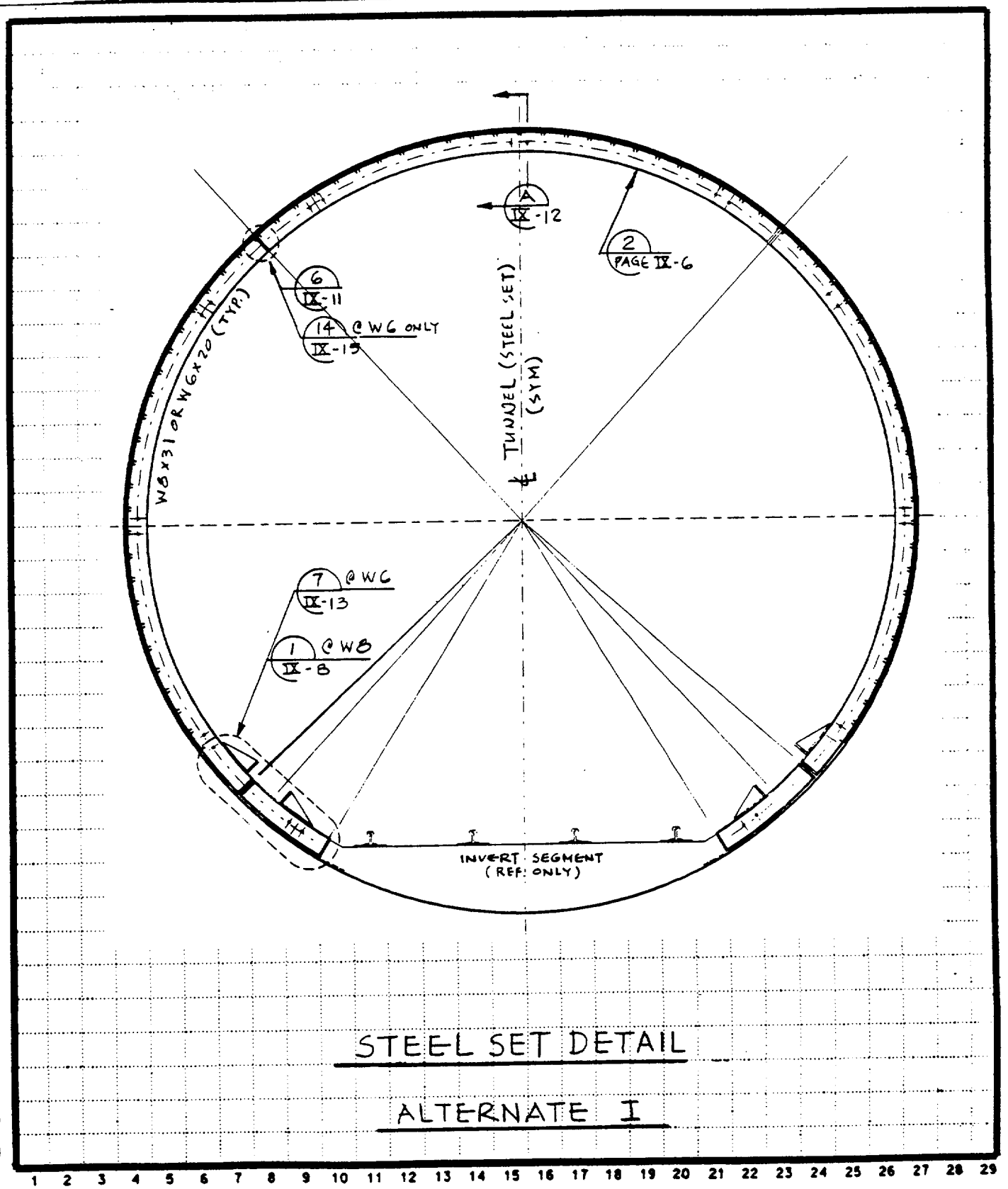

STEEL SET DETAIL

ALTERNATE I

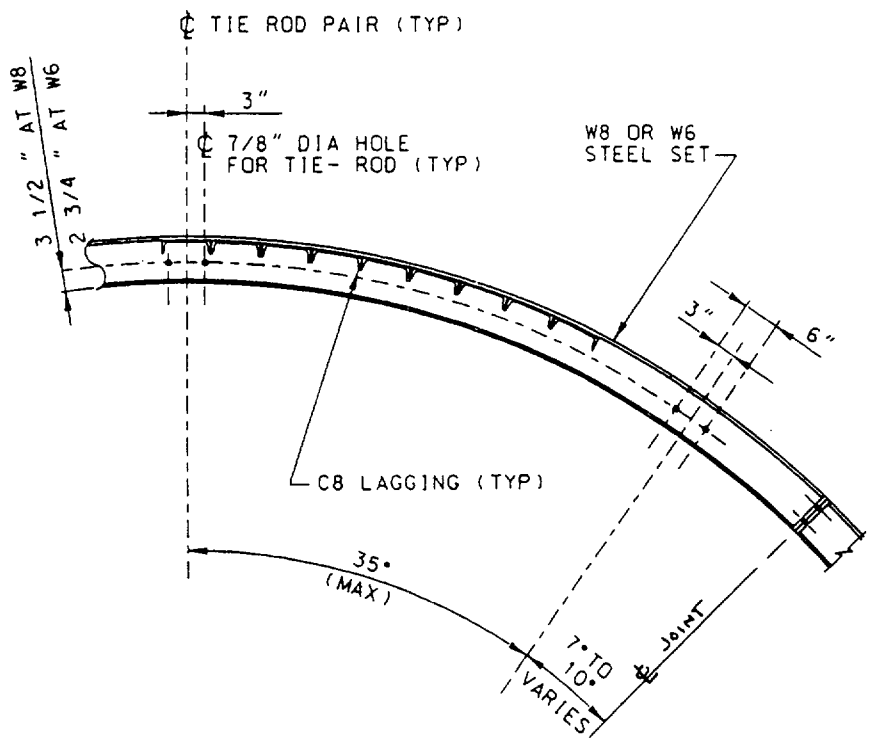

DETAIL 2

SCALE: NONE

PAGE IX-5 & IX-16

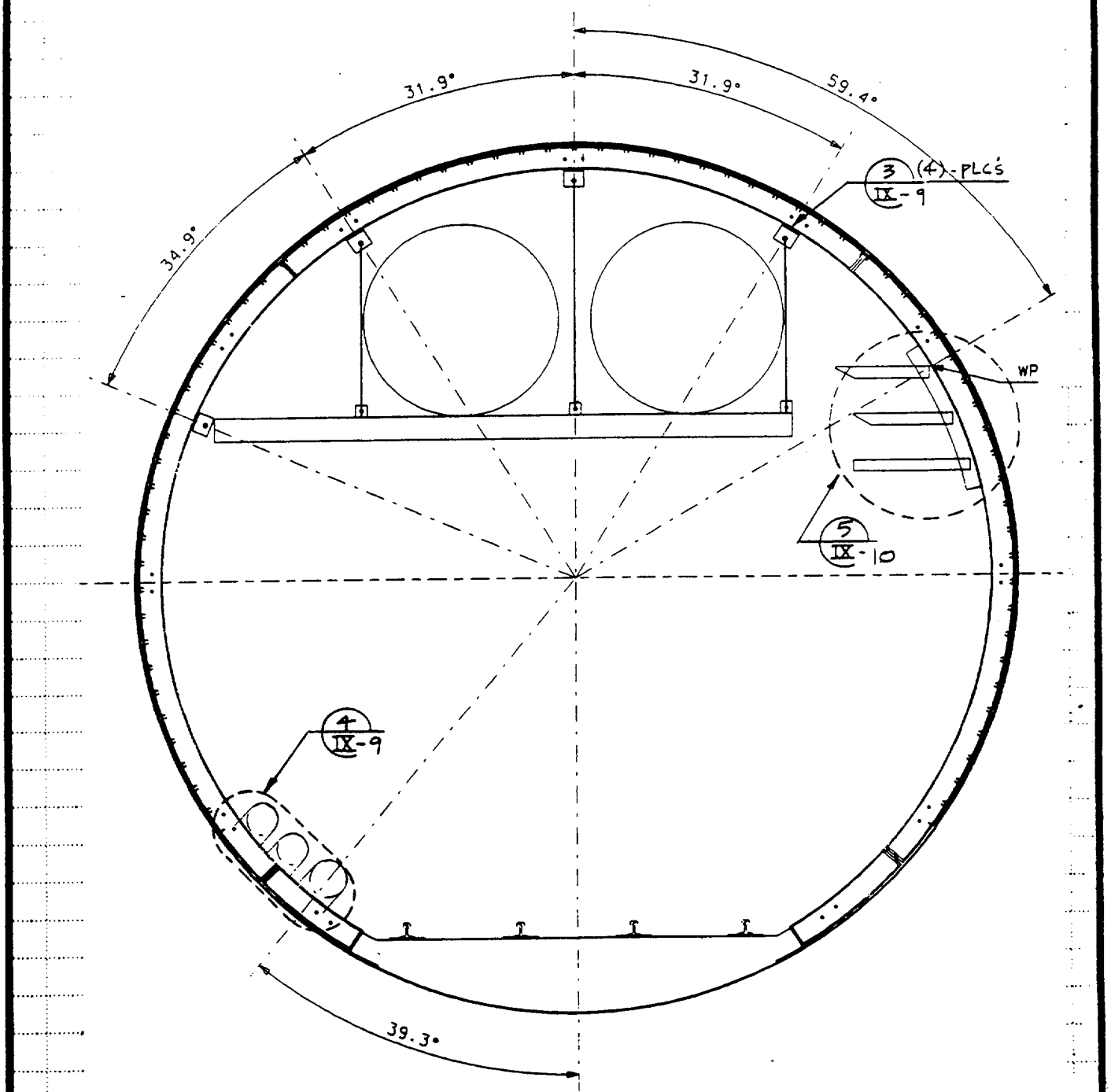

UTILITY SUPPORT DETAILS

NOTE: SEE GENERAL NOTE 3, PAGE IX-2

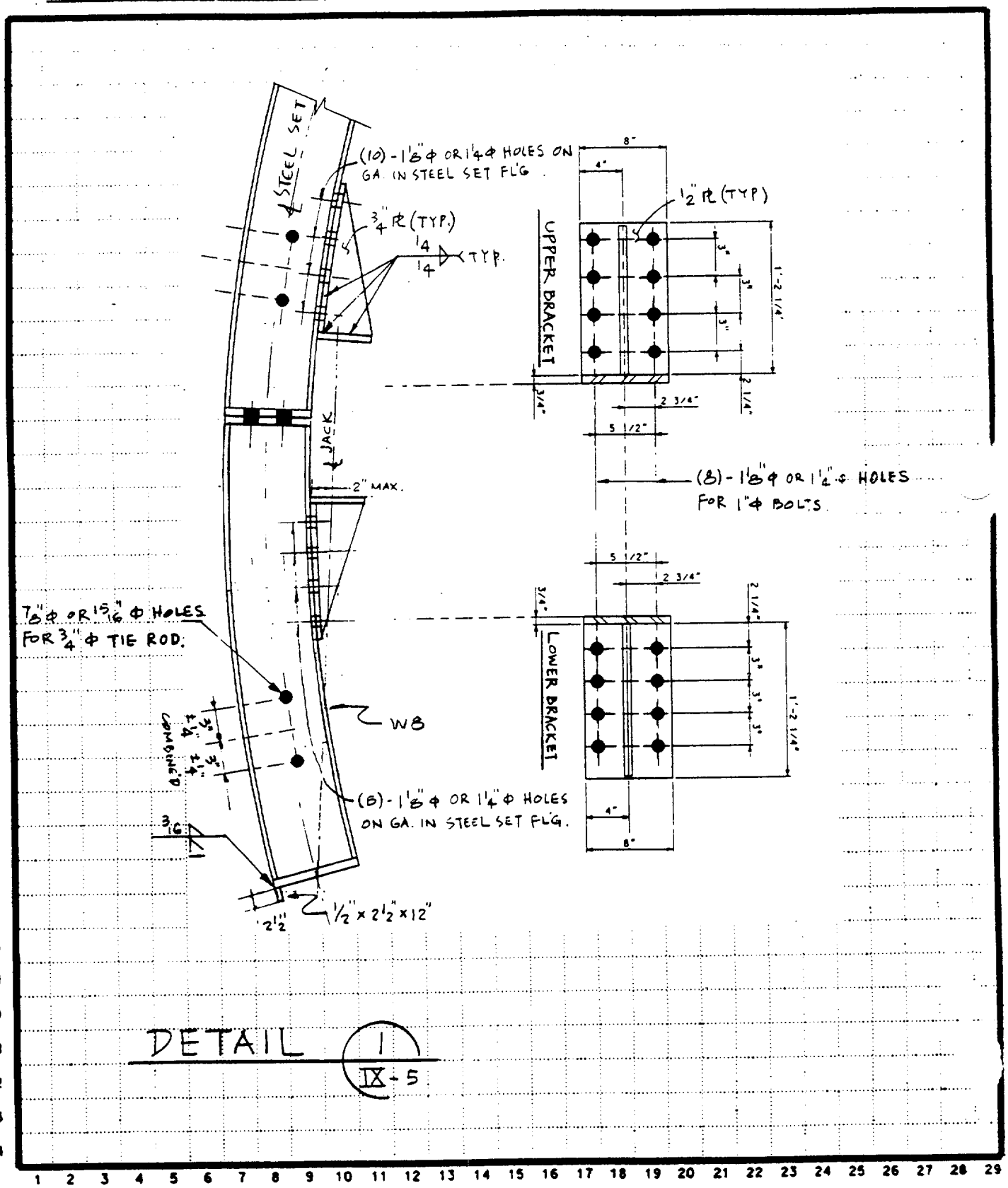
STEEL SET
(10) - 1 1/8" ϕ OR 1 1/4" ϕ HOLES ON GA. IN STEEL SET FLG.
3/4" R (TYP.)
1/4
1/4
TYP.
JACK
2" MAX.
7/8" ϕ OR 15/16" ϕ HOLES FOR 3/4" ϕ TIE ROD.
3" ± 1/4"
3" ± 1/4"
COMBINED
W8
(6) - 1 1/8" ϕ OR 1 1/4" ϕ HOLES ON GA. IN STEEL SET FLG.
3/16
1/2" x 2 1/2" x 12"
2 1/2"
8"
4"
1/2" R (TYP)
UPPER BRACKET
3"
3"
3"
1'-2 1/4"
3/4"
2 3/4"
2 1/4"
5 1/2"
(8) - 1 1/8" ϕ OR 1 1/4" ϕ HOLES FOR 1" ϕ BOLTS.
5 1/2"
2 3/4"
3/4"
2 1/4"
LOWER BRACKET
3"
3"
3"
1'-2 1/4"
4"
8"

DETAIL 1
IX-5

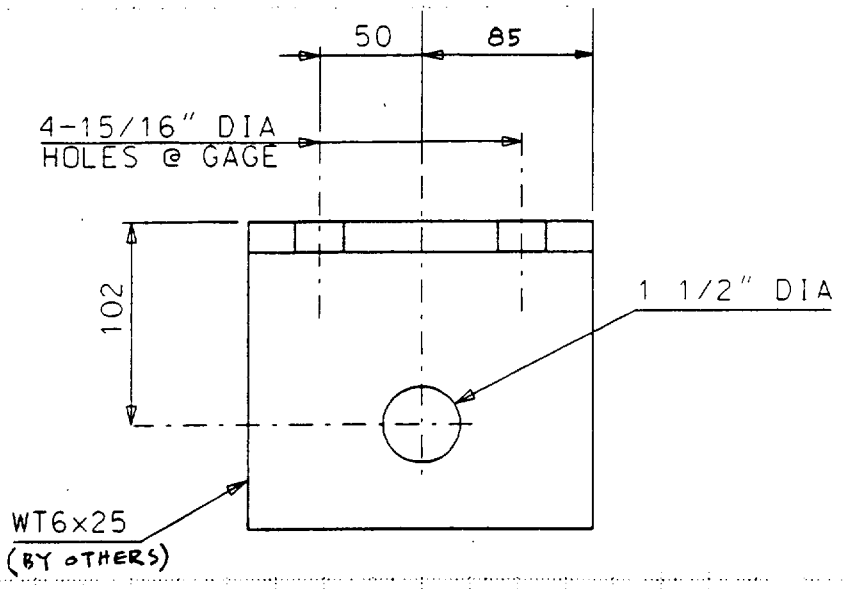

DETAIL 3 IX-7 VENTILATION DUCT BRACKET.

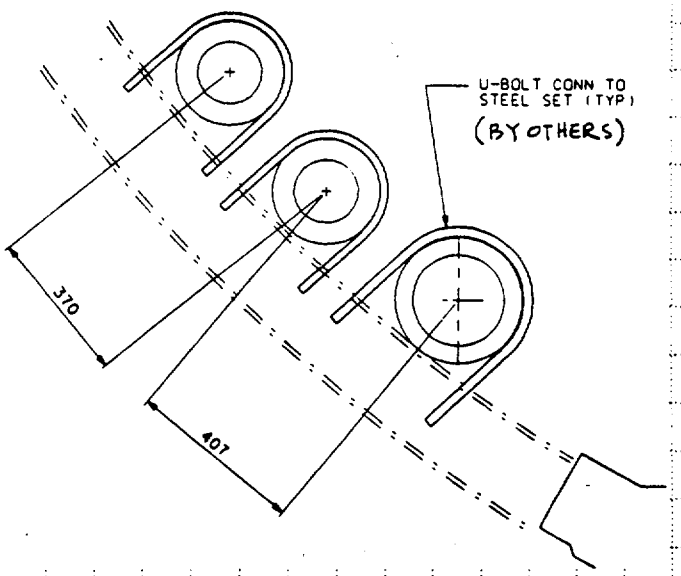

DETAIL 4 IX-7 SUPPLY/WASTE WATER & AIR PIPE SUPPORTS

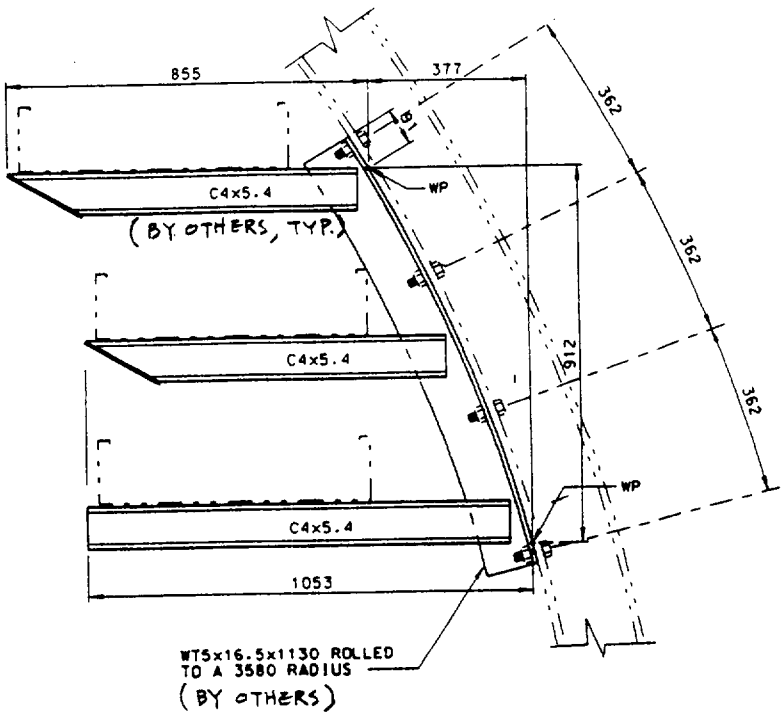

DETAIL 5 ELECTRICAL CABLE TRAY SUPPORT
IX-7

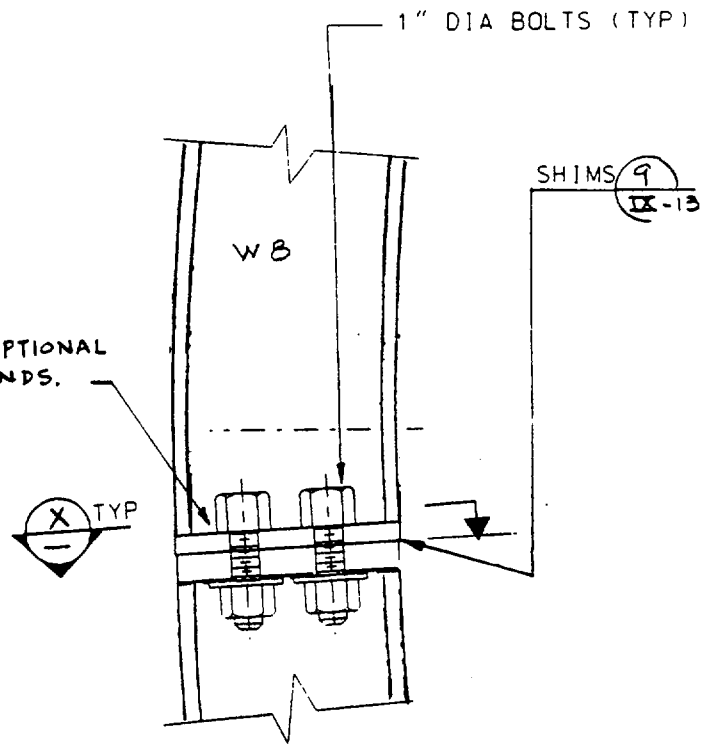

DETAIL 6 IX-5 & 8

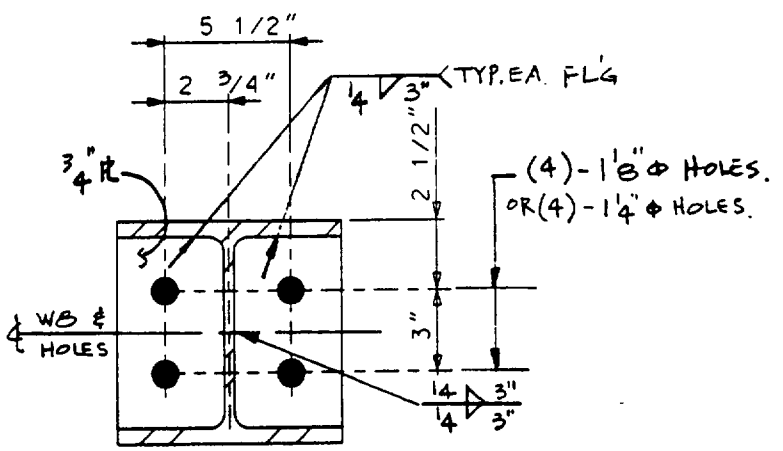

SECTION X

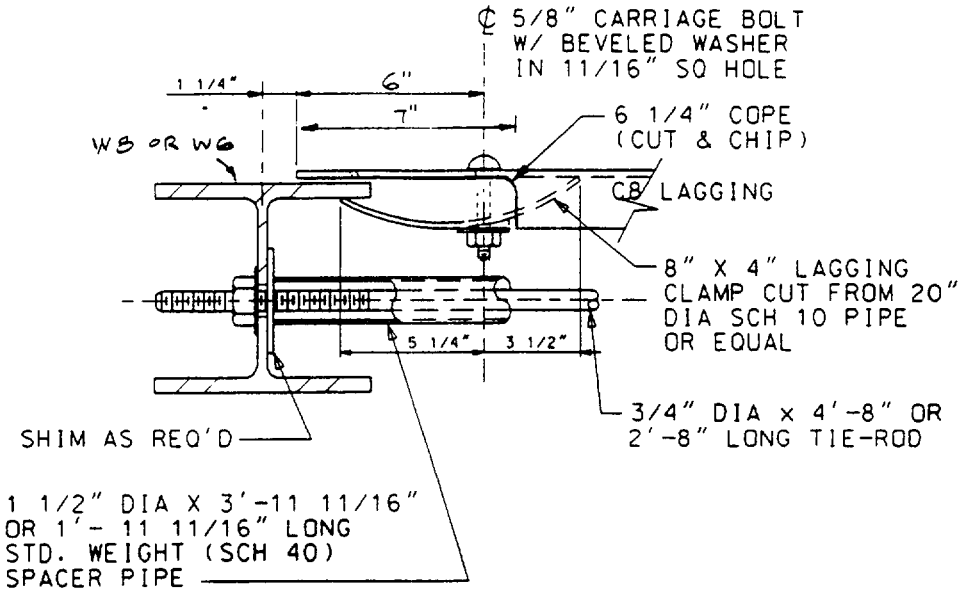

SECTION (A) IX-5 LAGGING CLAMP, CARRIAGE BOLT, NUT AND WASHER ARE NON-Q ITEMS.

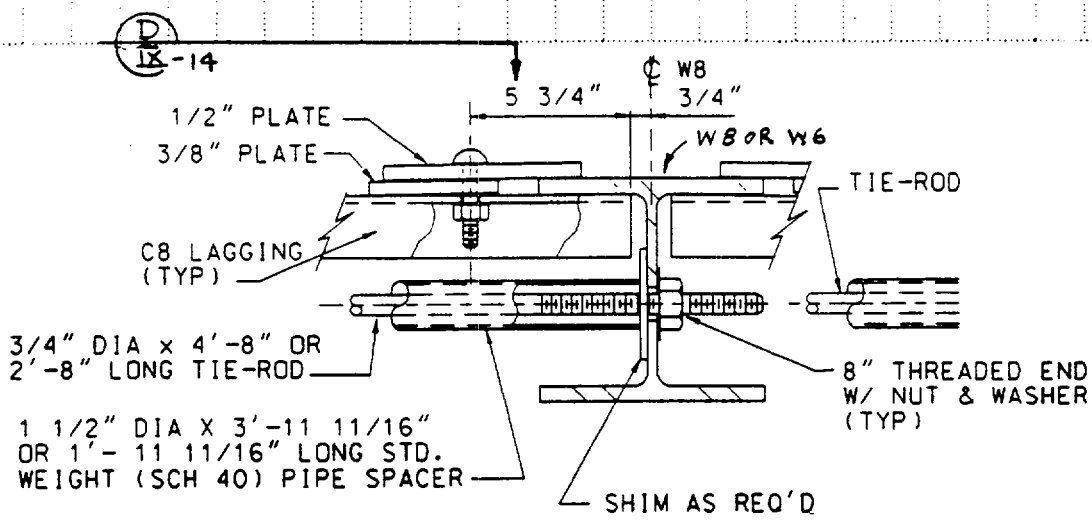

(8) — THIS DETAIL IS CONTRACTOR'S OPTION TO SECTION "A" (FOR W8 ONLY)

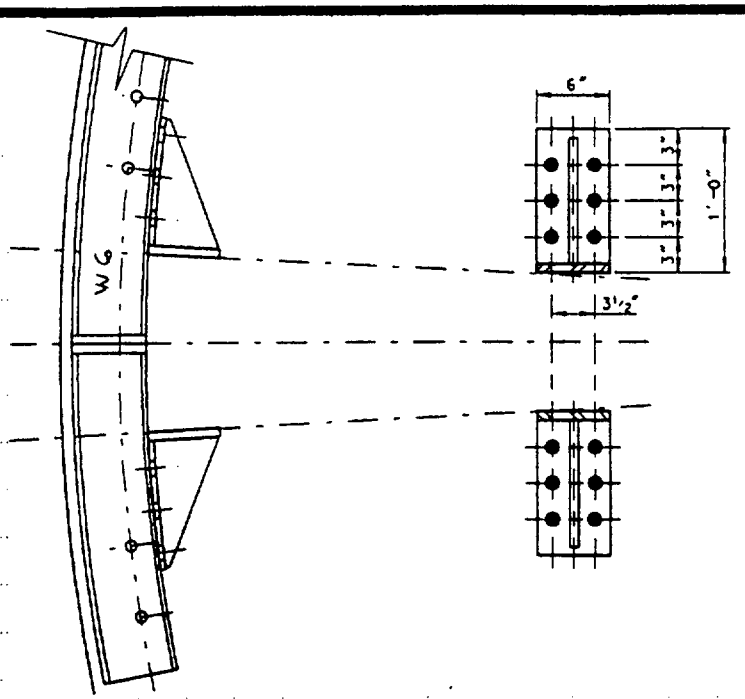

NOTE: 1. SAME DIMENSIONS FOR UPPER & LOWER BRACKETS.
2. FOR INFORMATION NOT SHOWN SEE DETAIL 1, PAGE IX-8

DETAIL 7
PAGE IX-5 & IX-17

SHIM PLATE PACK
2 EA 1/8" PLATE
2 EA 1/4" PLATE
2 EA 1/2" PLATE
1 1" PLATE

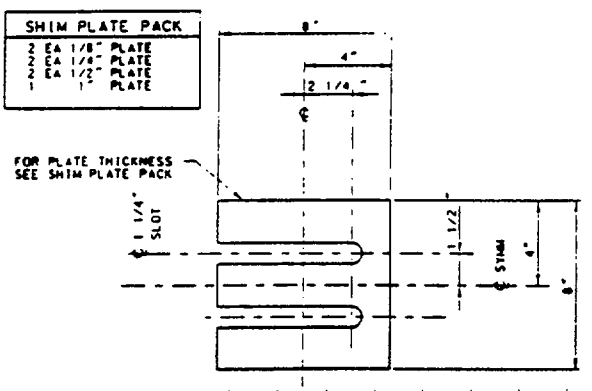

DETAIL 9
IX-11

QUANTITY OF SHIM PACK AN PLATE THICKNESS ARE CONTRACTOR'S OPTION.

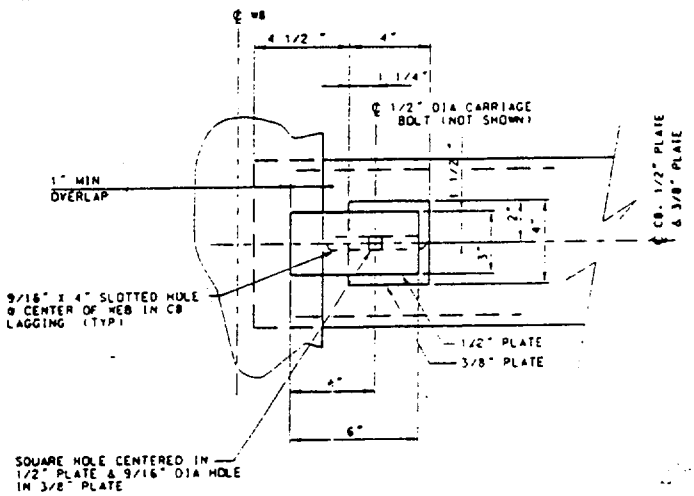

VIEW D
SCALE: 3" = 1'-0"
IX-12

FABRICATION OF STEEL WEDGES SHALL BE CONSTRUCTORS OPTION OF THE FOLLOWING:

(A) FABRICATE AS SHOWN ON THIS DETAIL.
(B) CUT FROM TS 8x2x3/8 STRUCTURAL TUBING.
(C) CUT & BEND 3/8" PLATE.
(D) CUT FROM C8x11.5
(E) ALTERNATE DESIGNS BY CONSTRUCTOR SHALL BE REVIEWED BY A/E

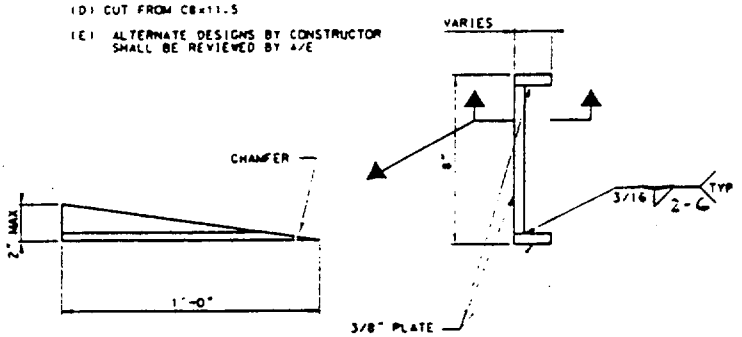

WEDGE DETAIL

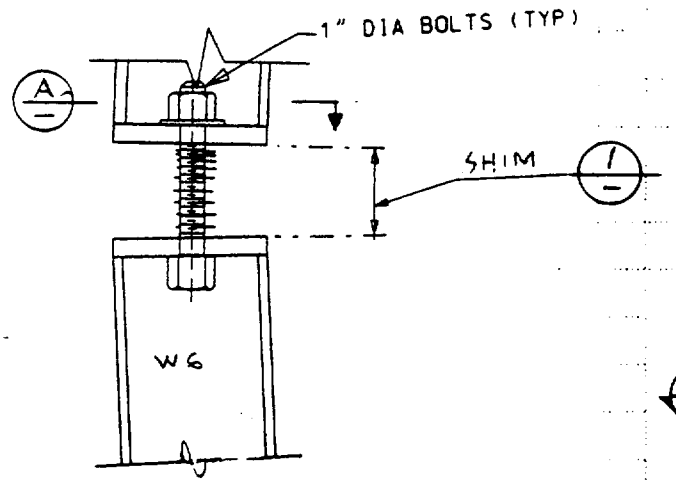

DETAIL 13 IX-5

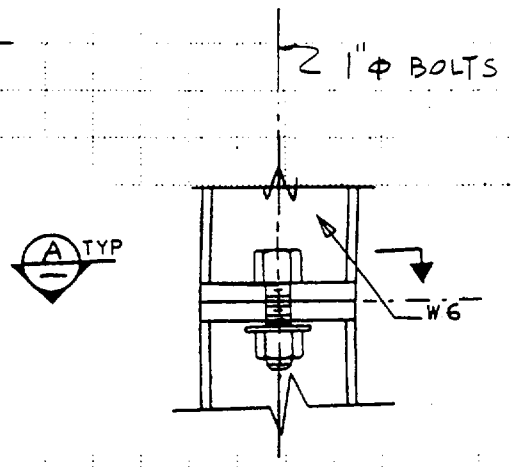

DETAIL 14 IX-5

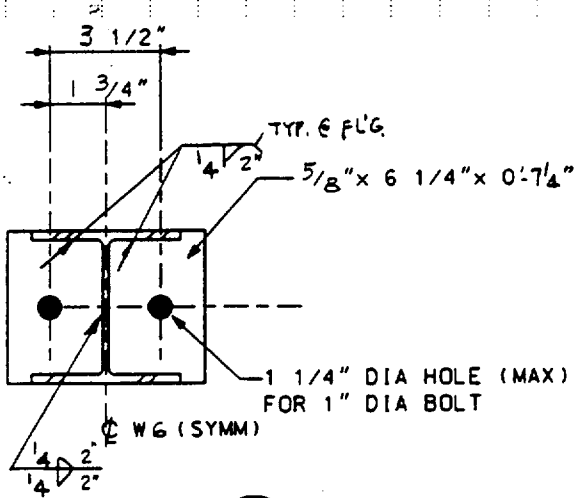

SECTION A

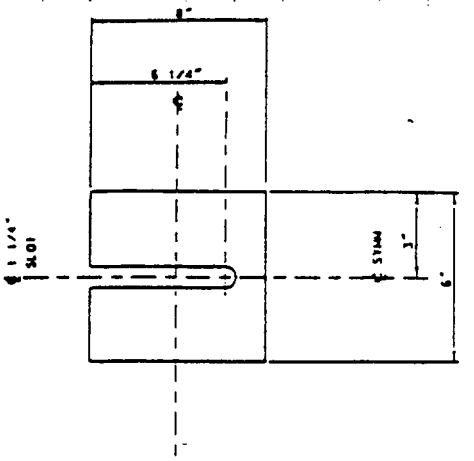

DETAIL 1
SCALE: NONE

QUANTITY OF SHIM PACK AND PLATE THICKNESS IS CONSTRUCTORS OPTION

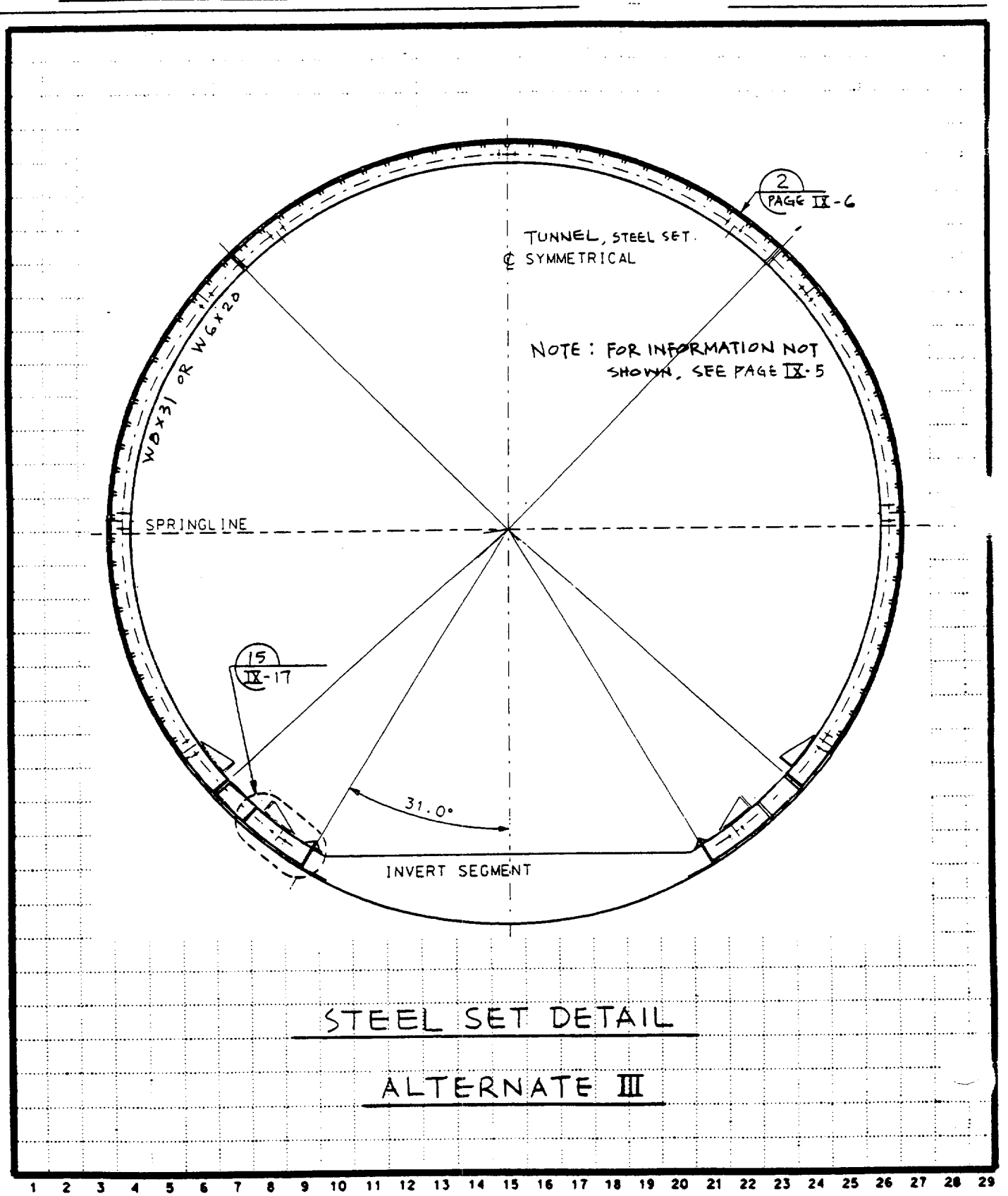

STEEL SET DETAIL

ALTERNATE III

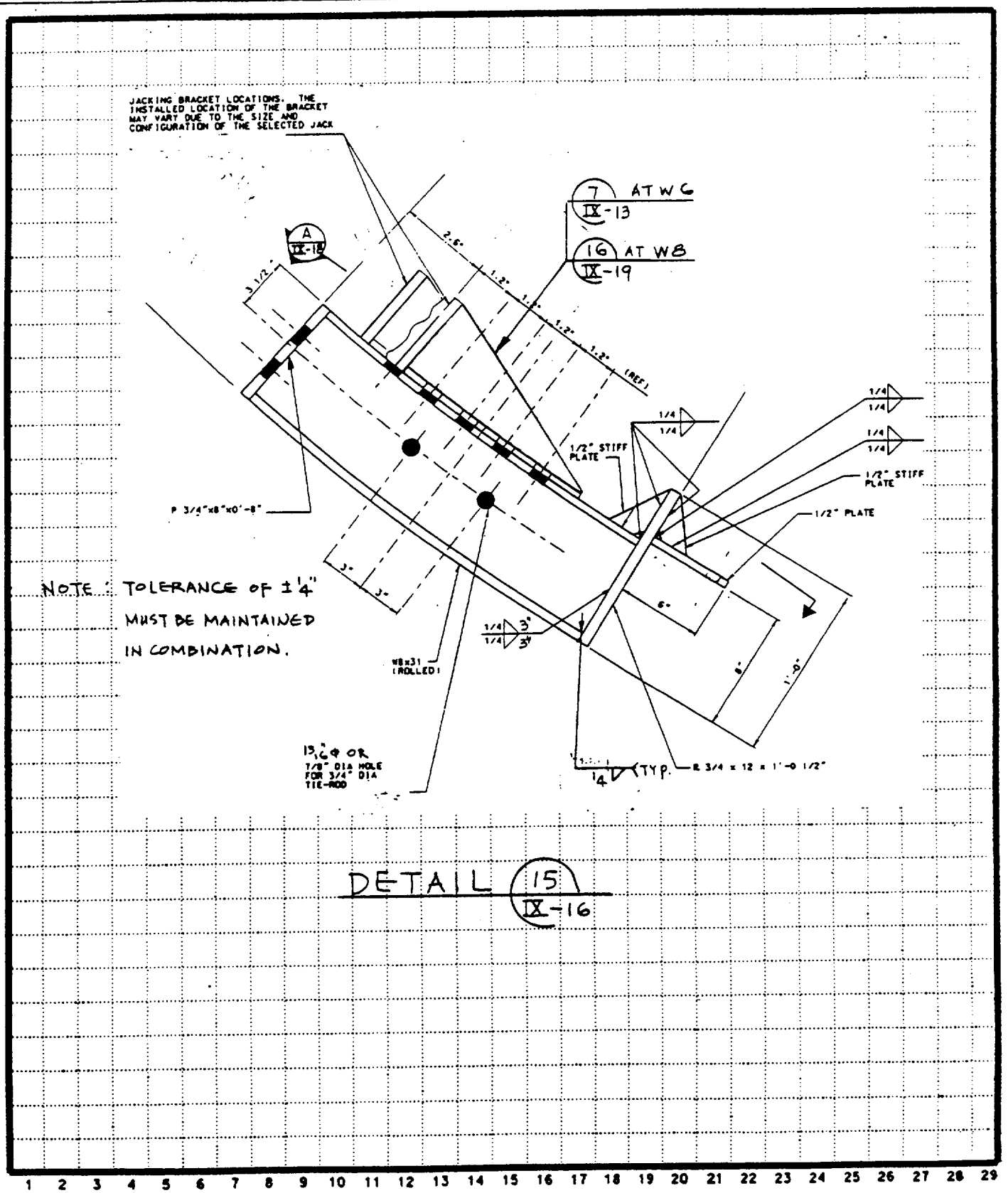

NOTE: TOLERANCE OF ±1/4" MUST BE MAINTAINED IN COMBINATION.

DETAIL 15
IX-16

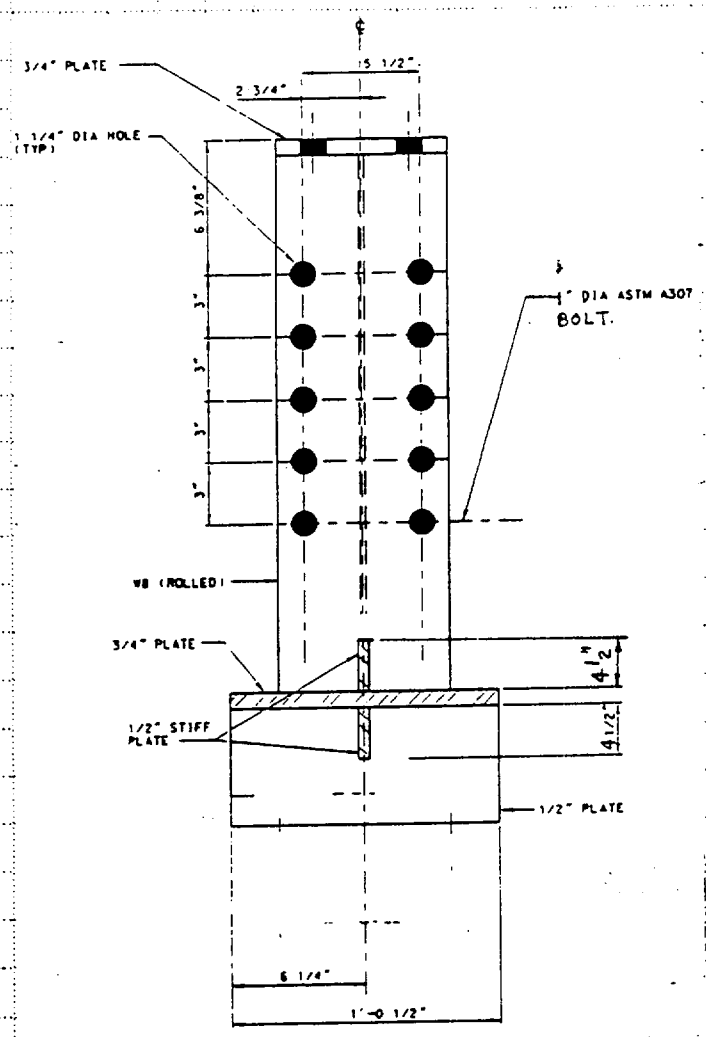
3/4" PLATE
15 1/2"
2 3/4"
1 1/4" DIA HOLE (TYP)
6 3/8"
3"
3"
3"
3"
1" DIA ASTM A307 BOLT.
W8 (ROLLED)
3/4" PLATE
4 1/2"
4 1/2"
1/2" STIFF PLATE
1/2" PLATE
6 1/4"
1'-0 1/2"

VIEW A
IX-17

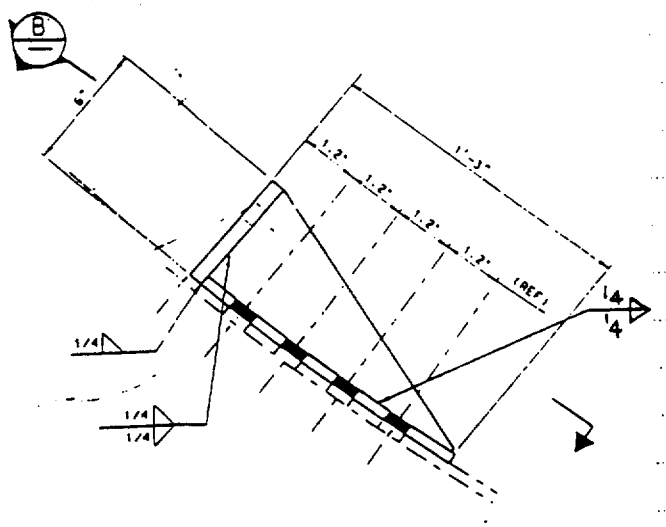

DETAIL 16 IX-17
SCALE: 3" = 1'-0"
2 BRACKETS EA RIB
14 TOTAL ; REQD

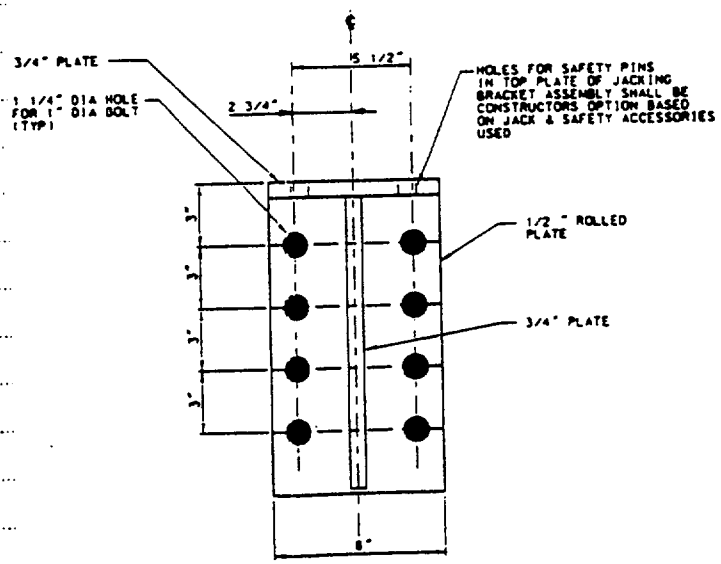

VIEW B
SCALE: 3" = 1'-0"

CRWMS/M&O

Specification Cover Sheet

Complete only applicable items.

(1.)

QA: ~~L~~ N 9.27.95

2. TITLE

SUBSURFACE GENERAL CONSTRUCTION PRELIMINARY

3. DOCUMENT IDENTIFIER (Including Rev. No.)	4. REV. NO.
BAB000000-01717-6300-01501 REV 04C	04C

5. QA CLASSIFICATIONS
See Subsection 1.04 for QA Classifications and Quality Assurance information.
QA Controls apply to permanent items and related activities

6. Rev. No.	7. Total Pages	8. Description of Revision
00 7/11/94	14	Approved but not issued
01 9/12/94	14	Issued for Construction Revised to incorporate change in DIE and review comments Editorial changes throughout the entire Specification Section Add "(HOLD POINT)" to Paragraphs where applicable Article 1.01 Delete DIE reference Delete Paragraphs 1.02B through 1.02I (not specifically referenced) Paragraph 1.03A Delete CRWMS M&O DIE and Analysis and add YMP-025-1-SP09 Section 15485 Delete Paragraph 1.03A CFR Requirements Add Paragraph 1.03C CTS Reference Delete Paragraph 1.04B Delete Paragraph 1.05J DIE definition , add Paragraphs 1.05K QA Surveyor of Records, and 1.05L for Permanent Function Ground Support Delete Paragraphs 1.06A and 1.06B Paragraph 3.01A Clarify QA Controls Paragraph 3.01B Add Hold Point Paragraph 3.01C Add Hold on ventilation requirements Paragraph 3.01E Add Hold on ESF Selection of Ground Support and delete original 3.01E and F and renumber accordingly Paragraph 3.01I Original paragraph deleted and included in 3.01J Paragraph 3.01G Add QA Surveyor of Record provision and add Hold Point Paragraph 3.01H Add TBM construction tolerance and Hold Point Paragraph 3.01I Revised for DIE Revision Paragraph 3.01K Delete original, include in 1.04B Paragraph 3.01 J Add TBV -199 and TBV 200, add statement for maintenance/repair on permanent function ground support

9. ORIGINATOR	Date
10. CHECKER	Date
11. LDE	Date
12. VERIFIER	Date
13. QUALITY ASSURANCE	Date
4. DEPARTMENT MANAGER	Date

ENCLOSURE

Complete only applicable items.

2.TITLE
SUBSURFACE GENERAL CONSTRUCTION PRELIMINARY

3. DOCUMENT IDENTIFIER (Including Rev. No.)
BAB000000-01717-6300-01501 REV 04C

4. REV. NO.
04C

5. Rev No.	6.Total Pages	7. Description of Revision
01 Cont.		Paragraph 3.01K Add control for addition of appurtenance to permanent function ground support, Hold Point and Hold Paragraph 3.01L Add "batch mixing" for chemical tracers Paragraph 3.01M Add for Spill Response Plan Paragraph 3.01N Clarify for SRP and pumping of ponded water Paragraph 3.01O Revised to better address DIE Rev 01 and Constructor's responsibilities Paragraph 3.01P Add that water limits do not apply to conveyor dust control water Paragraph 3.01R Revised to better address DIE Rev 01 Paragraph 3.01S Place on Hold Paragraphs 3.01S2d and 3.01S2e Restrict starting diesel in tunnel Paragraph 3.01T Add "equal to or" , delete Note and place Hold Paragraph 3.01U Add conveyor equipment Paragraph 3.01V Original removed Paragraph 3.01W Revised to better address DIE Rev 01 Paragraph 3.01X Clarify for Constructor/AE responsibilities Paragraph 3.01Y Remove original and replace with 3.02C Paragraph 3.01Y Expand on use of chlorides Paragraph 3.01Z Expand for DIE QA Controls, place Hold Paragraph 3.01Z Remove original and include with 3.02C Paragraph 3.01AA Original remove and place in 3.02B Add Paragraph 3.01AA for TBM ventilation system Add Paragraph 3.01AB for temporary lightning protection Paragraph 3.01AC add 1.04B Paragraph 3.02C Remove original and place in 3.01W Paragraph 3.02C Replaces 3.02F add QA Control for operating fluids Paragraph 3.02D Original deleted replaces 3.02E and G Paragraph 4.01B Delete original and add statement for A/E review and acceptance of revisions to submittals Paragraph 4.01C Remove original Paragraph 4.02 Changes as required to reflect changes in submittal listing Paragraph 1.03B Replace document number
02 10/ 10/94	15	Paragraph 3.01C Remove HOLD HM94-16.0000-16 Paragraph 3.01C1 Change wording to state Constructor to support testing of ventilation system(s) Paragraph 3.01C2 Modify for fan location based on data evaluation Paragraph 3.01C3 Add "and shall perform periodic dust and gas sampling as necessary" and remove "and A/E Specification Sections" Paragraph 3.01E Remove HOLD HM94-16.0000-15 Paragraph 3.01E1 add "Installation of ground support shall be in accordance with the applicable Drawings and Specification Sections." Paragraph 3.01E4, remove "cross-reference to thew A/E geotechnical log." Paragraphs 3.01K and 3.01L - remove HOLD HM94-16.0000-15 Paragraph 3.01J - add "Specification 01400 and shall be maintained as QA Records" and remove "the applicable Specification Section(s) Paragraph 3.01J - remove "for their useful ....whichever is greater"

Complete only applicable items.

.TITLE
SUBSURFACE GENERAL CONSTRUCTION PRELIMINARY

3. DOCUMENT IDENTIFIER (Including Rev. No.)	4. REV. NO.
BAB000000-01717-6300-01501 REV 04C	04C

5. Rev No.	6. Total Pages	7. Description of Revision
02 Cont.		Paragraph 3.01L - add "piped or otherwise transported into" and remove the last sectence Submittal and Notification Requirements - Remove "Vent Air Monitoring Data" Remove HOLDs and place submittal information
03 1/9/95	15	Paragraph 3.01N - Revised paragraph to incorporate BCP-02-95-0011 Rev 00 Paragraph 3.01S - Revised entire paragraph, added note and removed HOLD HM94-16.0000-17 Paragraph 3.01T - Revised entire paragraph Submittal and Notification Requirements Table - Revise line 3.01S Paragraph 3.01S - Revised to incorporate discipline check comments Specification Cover Sheet and para. 1.04 A & B - Revised to agree with NLP-3-18 Rev 02 Para's 3.01S, 3.01S1c, 3.01S3, 3.01S5, and 3.01S6 - Revised to incorporate ID Review Comments. Para. 3.01J & 3.01S3a - Revised in response to Verification Review comments.
04C 9/27/95	16	Issued for External Review Editorial changes and clarifications throughout Revised to incorporate conclusions of Subsurface General Construction Analysis, BAB000000-01717-0200-00148 Rev 00 Revised to incorporate requirements of QAP-3-8 Rev 05 Revised to incorporate requirements of NLP-3-18 Rev 03 and clarify QA Control applicability Change TFM Management Plan to TFM Procedure where used Revisions throughout to reflect discipline and interdiscipline check comments Change scope from TS North Ramp to TS Tunnel Loop Incorporated and clarified BCP-02-95-0046, BCP-02-95-0072, BCP-02-95-0091, BCP-02-95-0157, BCP-02-95-0175, ECR E95-0006, ECR E95-0034 Para. 3.01C - Revised per Discipline Check comment Para. 3.01E2 & 3.01J - Revised to reflect Ground Support Systems Classification Analysis Para. 3.01Q - Deleted per Discipline Check Comment Para. 3.01R - Changed to 3.01T Paras. 3.01U thru W, and Y thru AB - Reordered and Renumbered Para. 3.01AB - Deleted per Discipline Check comment Para. 3.01AC - Add I.D. Review comment Para. 3.02 - Revised to clarify Submittal and Notification Requirements Table - Revised to incorporate BCP-02-95-0157 , BCP-02-95-0175 & and also correct error in ECR E95-0034.

SECTION 01501

SUBSURFACE GENERAL CONSTRUCTION

PART 1 GENERAL

1.01 SECTION INCLUDES

This Specification Section applies to Exploratory Studies Facility (ESF) subsurface construction activities, including construction equipment (e.g., equipment, temporary utilities, and systems furnished by the Constructor), materials, and related construction activities as required by the Architect/Engineer (A/E) "Issued for Construction" Drawings and Specification Sections.

1.02 RELATED SECTIONS

Division 1 General Requirements

YMP-025-1-SP09 Section 15485 Operation of Initial Tank Chemical Tracer Injection System

1.03 REFERENCES

A. Construction and Tunneling Services (CTS):

CTS Operating and Service Manual, Yucca Mountain Tunnel Boring Machine Model 760-8, YMP-025-1-SP05-11910-VD-01-5

B. Yucca Mountain Site Characterization Project (YMP) Documents:

1. Tracers, Fluids, and Materials Data Reporting and Management procedure, YAP 2.8Q, Rev 0, ICN 0

2. M&O Technical Document Preparation Plan, "Plans for Continuing TBM Advance", BAB000000-01717-4600-00024 Rev 00

3. Specification Inputs List

C. Office of Civilian Radioactive Waste Management (OCRWM):

DOE/RW-0333P Quality Assurance Requirements and Description (QARD), Rev. 4

1.04 QUALITY ASSURANCE

A. QA shall be conducted in accordance with Specification Section 01400.

B. This Specification Section covers permanent items and associated activities classified QA-1, QA-2, and QA-5. QA controls are denoted by underlining and are preceded by "QA Control"

or "QA-X Control". Items not underlined are QA:N/A.

1.05 DEFINITIONS

A. Constructor: The Constructor, including its subcontractors, is the contracting organization responsible for construction, including the furnishing and acceptance of construction equipment and materials.

B. A/E: The organization responsible for design of the ESF, including preparation of the design Drawings and Specification Sections and for providing Title III engineering services.

C. A/E Specified Equipment: Equipment specified by the A/E in approved Specification Sections for ESF subsurface construction and operation (e.g., Tunnel Boring Machine [TBM], rail haulage equipment, conveyor, ventilation system, utility lines, substations, and power lines).

D. Constructor Furnished Equipment: Equipment furnished by the Constructor which is not A/E specified equipment, or is furnished as a temporary substitute for A/E specified equipment and may include transferred Nevada Test Site equipment.

E. Temporary Construction Systems: Those systems comprised of Constructor furnished and/or A/E specified equipment and materials installed prior to the final installation of the A/E designed systems.

F. A/E Designed Systems: The A/E "Issued for Construction" Drawings and approved Specification Sections issued to the Constructor.

G. Construction: ESF excavation and other construction activities including the installation of utilities and facilities required for operation.

H. Operation: ESF site characterization activities. These activities may be ongoing during construction.

I. Utility Systems: Those service systems required to support the ESF for site characterization operation (e.g., compressed air, water and wastewater pipelines, power lines, communication lines, ventilation). These utilities may be in use during construction and operation.

J. Tracers, Fluids, and Materials (TFM): Generally refers to any material consumed within the Subsurface ESF; specifically refers to those materials evaluated and controlled in accordance with YAP 2.8Q, a procedure to regulate, control, and document the use of TFM to ensure that the impact of their use is adequately evaluated and accounted for.

K. QA Surveyor of Record: ESF surveyors with an approved QA program and procedures for performing quality-affecting survey activities.

L. Permanent Function Ground Support: Ground support items designated QA-1 and QA-5 on the A/E approved Drawings and Specification Sections.

1.06 SYSTEM DESCRIPTION

(NOT USED)

PART 2 PRODUCTS

(NOT USED)

PART 3 EXECUTION

3.01 ESF CONSTRUCTION REQUIREMENTS

A. The Constructor shall install temporary support systems for performing construction work and for supporting the ESF Site Characterization testing program until the A/E designed systems are installed. These temporary support systems may include muck handling, electric power, lighting, compressed air, ventilation, water, wastewater, fire protection, communications, and monitoring systems. The Constructor shall remove, to the extent practical, all temporary construction systems in a planned expeditious manner upon transferring to the A/E designed systems.

QA Control: Any temporary items not removed shall be documented and reported in accordance with the TFM Data Reporting and Management procedure.

B. The Constructor shall submit for A/E review and acceptance, plans for installing temporary support systems and for transitioning to the A/E designed systems. These plans may be submitted in phases. (HOLD POINT)

C. Ventilation Requirements

1. The Constructor shall provide support as necessary to the A/E for conducting tests of the ventilation system(s) installed on the TBM, in the TS Tunnel Loop and in associated alcoves. Monitoring by the A/E may include, but is not limited to, fan performance, system leakage, duct and tunnel resistance to air flow, and duct and ramp air velocities.

2. The Constructor shall maintain sufficient airflow and shall perform periodic dust and gas sampling as necessary to satisfy the air quantity/quality/velocity criteria imposed by regulatory requirements. In working headings, where excavation and drilling equipment are operating, the minimum average air velocity shall be maintained at 0.51 mps (100 fpm).

D. The Constructor shall provide support for TS Tunnel Loop construction and operations, including testing, mapping, and construction monitoring activities as required. QA Control: Selected location and timing for test alcove construction shall be subject to Test Coordination Office (TCO) acceptance. The A/E will coordinate the selected location and timing requirements with the Constructor.

E. TS Tunnel Loop Selection of Ground Support

1. Ground support classes are shown on the Drawings for application in the TS Tunnel Loop. These ground support classes are intended to address the anticipated range of ground conditions. Installation of ground support shall be in accordance with the applicable Drawings and Specification Sections. The ground support guidelines included on the Drawings are the current best estimates of ground support requirements and are based on the projected information and apply to the normal anticipated conditions. It is the responsibility of the A/E to observe ground conditions and provide geotechnical expertise in the selection of ground support.

   QA-1,5 Control: The ground support selection shall be made by the Constructor with signature concurrence of the A/E and shall be based on observation of actual conditions, which may include local off-normal or anomalous conditions.

2. QA-1,5 Control: The Constructor shall submit a ground support selection procedure to the A/E for review and acceptance prior to installation of any ground support in the TS Tunnel Loop and transition zones at support area intersections. The procedure as a minimum shall include proposed record keeping procedures, and shall identify Constructor personnel responsible for selection of ground support and for interfacing with the A/E. (HOLD POINT)

3. The Constructor may modify selection of ground support to meet his responsibility for personnel safety in accordance with the approved procedures.

4. QA-1,5 Control: Records shall include the support class installed, including as-built field adjustments, brief description of changes in ground conditions, and A/E signature. For records purposes, modifications within the support class will be considered normal events. Changes to support class, with the exception of expected changes due to lithostratigraphic boundaries and known faults or fault features, are to be reported as anomalous conditions.

F. QA-2 Control: Constructor shall submit to the A/E, documentation addressing qualifications and training of TBM operators and first line supervisory personnel. (HOLD POINT)

G. QA-2 Control: The QA Surveyor of Record shall provide a primary survey control network for use by the Constructor. The Constructor shall develop and submit to the A/E for review and acceptance, a procedure to monitor the alignment and ensure that tolerances of the excavated opening are within one-half tunnel diameter (i.e. 3.81 meters) of the established line and grade as shown on the approved A/E Design Drawings. To ensure this requirement is met, only qualified operators shall operate the TBM. (HOLD POINT)

H. Construction tolerance for TBM excavation shall not exceed a maximum departure of 300 mm from established line and grade as shown on the approved A/E design Drawings. The maximum gradient including design gradient plus runoff shall not exceed 1:33 (3.0%). Laser corrections applied to return to established line and grade shall not exceed an average rate of 300 mm per 100 m of tunnel. The Constructor shall develop and submit to the A/E for review and acceptance, procedures that address controls for adhering to the aforementioned

construction tolerances. These procedures shall address equipment and methodology to be used, including references as appropriate to primary survey control network established by the QA Surveyor of Record. (HOLD POINT)

I. Constructor shall develop for A/E review and acceptance, procedures for the operations and maintenance (O&M) of the TBM (Ref. 1.03A).(HOLD POINT) QA Control: These procedures will include as a minimum the following:

1. QA Control: Use maintenance procedures which require that a circuit be tested for residual pressure prior to servicing, to prevent oil loss due to inadvertent depressurization of a circuit when a component is removed.

2. QA Control: Use proper sanitation procedures to contain or clean-up oil loss due to removal of hydraulic lines or component in accordance with paragraph 3.01M & T.

3. QA Control: Maintain spill response kits in operational readiness and accessible locations.

4. QA Control: Perform maintenance/change-out and testing of components on the surface (i.e., in a cleaner environment) where practical (e.g., use of spare grease pump and a self contained hydraulic test stand when replacing a pressure controlling valve to set valve actuation pressure).

5. QA Control: Perform sampling of hydraulic and lube oils, based on manufacturer's recommendation, for contaminants as part of preventative maintenance (e.g., as an indication of seal degradation).

6. QA Control: Use replacement hydraulic and lube oil hoses that meet or exceed the minimum manufacturer's rating.

7. QA Control: Use cutter maintenance procedures which detail seal installation and testing procedures to minimize seal failures.

8. QA Control: Perform periodic maintenance based on manufacturers' recommended maintenance/surveillance frequencies, including, for example: cutter inspection, leak inspection, oil sampling, lubrication point inspection, belt tensioning, belt inspection, scrubber cleaning, parts replacement, belt replacement, etc.

9. QA Control: Use check sheets for routine inspections or maintenance.

NOTE: The tools, materials, instruments, and laboratories used for implementing the above controls are not "Q".

J. QA-1.5 Control: In order to meet the maintainable life of 100 years required for incorporation into a potential repository, Constructor shall develop and submit to the A/E for review and acceptance, procedures for routine inspection, maintenance, monitoring, and repair (as required) of the permanent function ground support system in both the TS Tunnel Loop and transition zones at support area intersections. Any supplemental permanent function

ground support shall be installed per applicable Specification Sections. Post-installation welding on permanent function ground support components must consider the applicable sections of QARD Section 9.0. The inspection, maintenance, and repair procedures shall document work processes in conformance with Specification 01400 and shall be maintained as QA records.

K. QA-1.5 Control: The Constructor shall develop and submit to the A/E for review and acceptance, any planned addition of appurtenances to the permanent function ground support. (HOLD POINT)

L. QA Control: All non-potable water used underground during construction and operation of the ESF shall have chemical tracer added (except for water used outside the tunnel for mixing concrete, grout or shotcrete which is then used in the TS Tunnel Loop and associated alcoves). The tracer concentration of 20 ppm ± 10 ppm for either the manual or automatic water supply system shall be verified by sampling and analysis. The Constructor shall develop a procedure that describes the sampling and analysis process for verifying the lithium bromide concentration and the verification frequency. The procedure shall be submitted to the A/E for review and acceptance. The concentration shall not exceed the limit specified in Nevada Department of Environmental Protection Permit No. NEV 89031.

1. Initial Tank Chemical Tracer System, "Batch Mixing" for tunnel construction water, shall be used in accordance with YMP-025-1-SP09 Section 15485 until the automatic chemical injection system is installed, tested, and approved for operation.

   Constructor shall submit to the A/E for review and acceptance, the necessary procedures for "Batch Mixing." (HOLD POINT)

2. Automatic Chemical Tracer Injection System for tunnel construction water shall consist of a skid mounted automatic chemical injection system.

   QA Control: The Constructor shall develop a procedure that describes the process and the frequency for checking the alarm systems of the automatic chemical tracer delivery system. The procedure shall be submitted to the A/E for review and acceptance. (HOLD POINT)

   If the alarm system is not functioning or the automatic chemical tracer injection system is in the manual operating mode, the system shall be continuously manned by an operator trained and qualified to the systems operating procedure.

M. QA Control: The Constructor shall submit to the A/E for review and acceptance, a Spill Response Procedure (SRP) that describes methods that will be used in the removal of spills and that identifies Constructor personnel responsible for determination of response actions to be taken. The procedure shall also address documentation of employee training with regard to the SRP. (HOLD POINT)

N. QA Control: Water use in the TS Tunnel Loop and associated alcoves and refuge chambers shall be minimized; accidental spills of water are to be minimized to the extent practical, and any spills that do occur shall be cleaned up in accordance with the SRP required in paragraph

3.01M. Any ponded water shall be removed from the TS Tunnel Loop, associated alcoves, and refuge chambers whenever quantities are sufficient that they can be removed by the Constructor's pumping equipment. Any unrecoverable water shall be reported as a consumed quantity in accordance with the TFM Data Reporting and Management procedure.

O. QA Control: The Constructor shall maintain a water balance and shall report water consumed in accordance with the TFM Data Reporting and Management procedure. The water balance data shall be obtained by metering or measuring water delivered to and discharged from the TS Tunnel Loop each working shift. Water reports shall list water consumption by area.

P. QA Control: Water consumption in the 7.62 meter diameter TS Tunnel Loop (including the Starter Tunnel) shall not exceed 7.4 m^3 per lineal meter of tunnel excavated. Verification that this limit has not been exceeded shall be performed for each working shift by dividing the total cubic meters of water consumed during the shift (as calculated by the water balance) by the linear meters of tunnel advance for the shift and comparing the value to the above limit. If less than 3 lineal meters advance are recorded for an individual shift, then the water consumed and any tunnel advance shall be included in the totals for the last shift during which at least 3 meters of advance was recorded and the water consumed per lineal meter recalculated.

Q. QA Control: The water consumption limit in alcoves (m^3 per linear meter) shall be calculated by multiplying the "C-Line" alcove excavation width (m) by 0.97 m^2. Water delivered into the alcoves shall be measured each shift to determine the alcoves portion of the total water delivered into the tunnel. Water recovered from alcoves may be estimated as a portion of the total discharged from the portal for comparisons against the water limits. Verification that alcove water limits have not been exceeded shall be made for each full face round blasted (water consumed since last full face blast divided by nominal round depth) during alcove construction.

R. QA Control: The water consumption limits shall not include water used for: (1) Cutterhead dust control on the TBM or other mechanical excavation equipment, (2) Dust control on subsurface conveyors, (3) Water used for wetting muckpiles. Water used for these purposes shall be measured and shall be assumed to be removed with the muck. Quantities of water used for shotcrete or grout shall not be considered consumed quantities above the Ptn-TSw1 contact , but shall be considered consumed quantities beyond the Ptn-TSw1 contact.

S. QA Control: The Constructor is permitted, subject to controls, to use diesel powered equipment in the TS Tunnel Loop and associated alcoves. Beyond Station 28+05 m diesel locomotives shall have exhaust treatment systems installed to reduce DPM emissions. Diesel equipment exhaust emissions shall be monitored by the Constructor as described below and the information acquired under this monitoring program documented as QA records.

1. Engines for all diesel powered equipment used in the TS Tunnel Loop and associated alcoves shall be maintained in accordance with the manufacturer's recommendations, including adjustment of the fuel system, proper maintenance of the engine air intake system and exhaust conditioning system. Exhaust emissions shall be tested/monitored prior to first use in the TS Tunnel Loop and thereafter as follows:

a. When excessive emissions are visually observed (excluding warm-up periods or hard acceleration when "smoking" is normal)

b. Prior to taking the equipment underground following maintenance of any emission related engine system

c. At not more than 500 hour intervals (+ 5%) of engine operation

2. Exhaust emission constituents to be monitored include the following:

a. Diesel Particulate Matter (DPM)

b. Oxides of Nitrogen (NO_x)

c. Sulphur Dioxide (SO_2)

d. Carbon Monoxide (CO) and Carbon Dioxide (CO_2)

3. The Constructor shall implement a program to minimize diesel exhaust emissions in the tunnel. The program shall include the following:

a. Diesel engines shall be tuned in accordance with the manufacturer's recommendations for the service application and shall be tested for the exhaust emission constituents specified in Para. 3.01S2. Constructor shall use the test results to develop on-site standards for each engine. The on-site standards shall include a 25% allowance factor for engine wear (i.e. multiply test result by 1.25). Engines that exceed the on-site exhaust emission standard on subsequent tests shall be brought into compliance before using underground.

b. Minimize engine idling time in the tunnel (e.g. shut engine down if the equipment is expected to remain in one location for more than five minutes).

c. Engine warm-up prior to taking the equipment underground

d. Other similar, practical measures that will mitigate the amount of emissions exhausted in the tunnel.

The Constructor shall prepare a procedure for implementing the exhaust emission minimization program and submit it to the A/E for review and acceptance. Accepted Procedure shall be implemented prior to tunnel advance beyond Station 4+00m. (HOLD POINT)

4. Only low sulphur diesel fuel less than 0.05% sulphur by weight shall be used in the ESF Subsurface Facilities. The following related controls shall also apply:

a. The sulphur content of fuel delivered to the storage facility at the NTS shall be documented in accordance with current NTS procurement sampling. If a sample tests more than 0.05% sulphur, Constructor shall ensure that the dispensed composite

diesel fuel blend meets the sulphur criteria.

b. The Constructor shall record equipment hour meter readings and fuel usage for each piece of underground equipment when it is refueled.

NOTE: The tools, materials, instruments and laboratories used for implementing the controls in Paragraph S are not "Q".

T. QA Control: The use of permanently retained organics during the construction and operation of the TS Tunnel Loop and associated alcoves shall be avoided, when practical alternative materials and methods exist. Potential equipment fluid leaks shall be minimized by performing regular inspections and scheduled maintenance. Spills of hydrocarbons, solvents and powders in excess of drips (e.g. ruptured hoses, spills from reservoirs) shall be cleaned up in accordance with the SRP (Para. 3.01M) and disposed of in accordance with Federal and State requirements. Cleanup of liquids shall include removal of puddles and partially saturated soils. Cleanup of powders shall include removal of the powder and sweeping solid surfaces to remove powder remnants. Organic spills on the invert segment which are absorbed by the invert segment need not be removed if it is clear that the spilled material is not likely to penetrate to the tunnel floor or past the invert segment seals. Inverts may be removed or inspection ports drilled after a spill if necessary to facilitate further inspection. Any unrecovered organics spilled or permanently retained in the TS Tunnel Loop and associated alcoves shall be reported in accordance with the TFM Data Reporting and Management procedure.

U. A Diesel Test Plan will be implemented by project testing participants to monitor the effects of diesel emissions on the ESF. The Constructor shall provide support as required for activities included in this Plan.

V. QA Control: The placement of large fluid storage systems underground shall be prohibited. Large systems are defined as storage tanks or vessels that exceed the volume of normal on-board vehicle fluid reservoirs, not including the sump storage tank or those volumes within tanks or systems mounted on the TBM, TBM trailing gear, rolling stock, or conveyor equipment.

W. QA Control: The Constructor shall include in its construction plans, provisions for notification of the Test Coordinator Officer (TCO) if flowing water from the excavation is encountered.

X. In the event that adverse ground conditions prevent normal TBM operations and jeopardize continued advance, special actions may be necessary to continue operations. The special actions will be dependent on actual ground conditions and cannot be developed in advance. The immediate response shall be to initiate actions that ensure personnel safety, tunnel stability and TBM integrity. Based on the actual conditions the Constructor and A/E shall jointly develop a plan in accordance with Reference 1.03B2.

QA Control: The plan for continuing TBM advance will be documented by the A/E and treated as QA Records. Documentation shall include impacts to Specification Sections under QA control and shall include signature concurrence by the A/E, Constructor, TCO and DIE

representation.

NOTE: The plan in Paragraph X may be implemented prior to completion of documentation.

Y. The Constructor shall operate and maintain equipment and utility systems consistent with regulatory requirements and tunneling industry standard operating practices.

Z. QA Control: The use of chloride shall be limited. Only non-chloride-based electrical ground enhancing material shall be used. The use of chloride-based concrete and grout accelerators and any other use of chlorides shall be limited to the extent practical and the amount used shall be recorded. Use of chlorides in the TS Tunnel Loop and associated alcoves shall first require TCO concurrence.

AA. The Constructor shall operate the TBM ventilation system according to manufacturer's O&M manual.

AB. The Constructor shall implement an administrative procedure for suspending construction activities in the tunnel during an electrical storm until the ESF lightning protection system is installed and operational.

AC. Wastewater Handling

1. The Constructor shall plan for continued and long term handling of tunnel wastewater with a temporary dewatering system.

2. The temporary dewatering system from underground to surface (including pipeline and pumps) shall have the capability to handle at least 200 gpm at maximum head.

3. The Constructor shall prepare a dewatering plan to meet these requirements and submit to the A/E for review and acceptance. Submittal shall be included under section 3.01B.

AD. The Constructor shall maintain electrical isolation between the surface ground grid and the subsurface (safety) ground grid.

3.02 ESF CONSTRUCTION EQUIPMENT

A. Equipment acquisition for ESF construction and operations is classified into three categories - (1) Equipment specified by approved A/E drawings and specifications; (2) Equipment that is furnished by the Constructor as a temporary replacement for A/E specified equipment; (3) Equipment that has not been specified by the A/E and will be furnished by the Constructor. The Constructor furnished equipment shall comply with regulatory requirements, tunneling industry standards and shall be reviewed and accepted by the A/E. To request A/E acceptance of Constructor furnished equipment to be substituted for A/E specified equipment the Constructor shall submit the following documentation: (HOLD POINT)

(1) A description of the equipment including intended purpose, safety features, fluid containing components, and compatibility with other interfacing equipment.

(2) A description of variances from the specified equipment.

(3) Locomotives - haulage calculation including weight, power, drawbar load, speed and stopping distance.

(4) Major equipment - Constructor shall specify that Supplier provide maintenance manuals and (if available) operating videotapes.

B. QA Control: Construction activities shall be conducted to minimize, to the extent practical, the potential for leaks and spills of equipment operating fluids.

1. The Constructor shall ensure that all Constructor furnished equipment incorporates reasonable features to minimize and mitigate the leakage and spillage of fluids, grease, and similar products to the extent practical. The Constructor shall identify components of the Constructor furnished equipment that contain such products and shall include this information in the submittal required under item 2 of this paragraph.

2. The Constructor shall develop and submit to the A/E for review and acceptance, procedures for O&M of all equipment (Constructor furnished equipment and A/E specified equipment with exception of the TBM, which is covered under a separate paragraph) with regard to operating fluids in the TS Tunnel Loop and associated alcoves. These procedures shall address documentation of checks made to assure the operational readiness of all equipment, with respect to leaks, prior to use in the tunnel. The procedure shall also address any specialized employee training (e.g. training for maintenance and operator personnel) with regard to leak prevention and mitigation. (HOLD POINT)

3.03 ESF CONSTRUCTION MATERIALS

A. The Constructor shall furnish the materials required to construct and operate the ESF in accordance with approved A/E Drawings and Specification Sections. Prior to use underground, the proposed materials shall be submitted for review and analysis in accordance with the TFM Data Reporting and Management procedure.

B. Materials for temporary construction systems installed prior to the A/E designed systems shall be in accordance with tunneling industry standard construction and operating practices. The quality shall be commensurate with regulatory requirements, tunneling industry standards, and local codes governing ESF construction operations.

PART 4 SUBMITTALS AND NOTIFICATION

4.01 SUBMITTALS

A. Submittals shall be in accordance with Specification Section 01300 and the attached Submittal and Notification Requirements sheet.

B. Any revisions to previously approved submittals shall be submitted to the A/E for review and acceptance.

4.02 NOTIFICATION

Should any change in this Specification Section be required to comply with these requirements, the Constructor shall notify the A/E in writing for review.

SUBMITTAL AND NOTIFICATION REQUIREMENTS

ONLY APPLICABLE ITEMS ARE TO BE COMPLETED

SECTION NO. 01501

TITLE: Subsurface General Construction

Requirements	Paragraph	STATUS: INFORMATION	REVIEW	CERTIFICATION	RECORD			TIMING: PRIOR TO TESTING	DAYS AFTER AWARD	PRIOR TO PROCUREMENT	PRIOR TO SHIPMENT	WITH SHIPMENT	PRIOR TO INSTALLATION	DAILY REPORT	AS DIRECTED	PRIOR TO FINAL ACCEPTANCE	PRIOR TO CONSTRUCTION	PRIOR TO USE	NOTIFICATI: WITNESS (DAYS)	HOLD (DAYS)		
Temporary Systems	3.01B		X		X												X			20		
Grd Support Selection Proc	3.01E2		X		X												X			20		
TBM Personnel T&Q Doc-Exc	3.01F				X												X			5		
Control TBM Line/Grade	3.01G		X		X												X			5		
Constructor Surveying	3.01H		X		X												X			5		
TBM O&M Procedures	3.01I		X		X												X			20		
Grd Support Maint Proc	3.01J		X		X												X					
Grd Support Appurtenances	3.01K		X		X													X		20		
Tracer Surveillance-Batch	3.01L1		X		X													X		5		
Tracer Surveillance-Auto	3.01L2		X		X													X		5		
Spill Response Procedure	3.01M		X		X												X			5		
Sample/Test Diesel Emissions	3.01S		X		X													X		5		
Wastewater Management	3.01AC		X		X												X			20		
Substitute Equipment	3.02A		X							X										20		
Misc. Equipment O & M	3.02B		X		X												X			20		

COMMENTS:

END OF SPECIFICATION SECTION

CRWMS/M&O

Design Analysis Cover Sheet

Complete only applicable items.

1.

QA: N

2. DESIGN ANALYSIS TITLE		
ESF Ground Support - Material Dedication Analysis for Structural Steel and Accessories from a Commercial Grade Source		
3. DOCUMENT IDENTIFIER (Including Rev. No.)	4. REV. NO.	5. TOTAL PAGES
BABEE0000-01717-0200-00004, REV 00C	00C	19
6. TOTAL ATTACHMENTS	7. ATTACHMENT NUMBERS - NO. OF PAGES IN EACH	8. SYSTEM ELEMENT
I	I-16	MGDS

	Print Name	Signature	Date
9. Originator	Marvin D. Stine		
10. Checker	Matthew J. Gomez		
11. Lead Design Engineer	Malcolm E. Taylor, Jr.		
12.QA Manager			
13. Department Manager			

14. REMARKS

1. The following TBVs/ TBDs apply to this analysis as noted herein:
   a. TBV-193-ESF: Seismic design values for steel sets to be verified.
   b. TBD-146-ESF: Thermal design loads for the ESF to be determined.
   c. TBD-147-ESF: Thermally-induced stresses in the steel sets (or lining) to be determined.
   d. TBD-154-RDR: Upgrades (if needed) to linings and ground supports due to a credible explosion & fire will be determined after completion of risk assessment.

ENCLOSURE 2

Design Analysis Revision Record

Complete only applicable items.

1.

2. DESIGN ANALYSIS TITLE	
ESF Ground Support - Material Dedication Analysis for Structural Steel and Accessories from a Commercial Grade Source	
3. DOCUMENT IDENTIFIER (Including Rev. No.)	4. REVISION NO.
BABEE0000-01717-0200-00004 REV 00C	00C

5. Revision No.	6. Total Pages	7. Description of Revision
00C	19	NOTE: The DI for this analysis has been changed to adopt the new CII system. The original DI for this analysis was BABEAB000-01717-0200-00003. Revisions 00, 01, 02, and 03 were developed and approved under the original DI. The new DI is BABEE0000-01717-0200-00004 which is adopted in this analysis. The new DI will start with Revision 00. This analysis has been expanded to address the ESF ground support structural steel and accessories material dedication. BABEE0000-01717-0200-00004 REV 00 Title of analysis changed. Analysis was reformatted to match QAP-3-9, Rev. 05. Commercial Grade definitions expanded to include EPRI Guidelines. General associated changes made throughout. Added Attachment I. Added: TBV-193-ESF, TBD-146-ESF, TBD-147-ESF, and TBD-154-RDR. Issued for External Review

1. PURPOSE

The purpose of this analysis is to select the critical characteristics to be verified for steel sets and accessories and the verification methods to be implemented via material dedication requirements for the procurement and use of Commercial Grade structural steel and accessories (which have a nuclear safety function) to be used in ground support (with the exception of alcove ground support and alcove opening framing) for the Exploratory Studies Facility (ESF).

2. QUALITY ASSURANCE

The quality assurance (QA) classification for items discussed in this analysis is presented in QA Classification Analysis of Ground Support Systems (Reference 5.3). The items analyzed in this document are only those structural steel and accessories used in the ESF ground support that have been classified: QA-1 and QA-5.

3. METHOD

The analytical method is used in this analysis.

4. DESIGN INPUTS

4.1 DESIGN PARAMETERS

The following design parameters represent minimum material characteristics for the items addressed in this analysis. Each of these items perform a safety related function and require material dedication.

4.1.1 Structural steel **Shapes** and steel **Plates**: American Society for Testing and Materials (ASTM) A36 - 58 kips per square inch (ksi) minimum tensile strength and 36 ksi minimum yield point (Reference 5.1).

4.1.2 Welding **Electrodes**: American Welding Society (AWS) A5.1 E70XX - 70 ksi minimum tensile strength (Reference 5.1).

4.1.3 Connection **Bolts**: ASTM A307 - 58 ksi minimum tensile strength (Reference 5.1).

4.1.4 Connection and Tie Rod **Nuts**: ASTM A563 heavy hex, Grade DH - 175 ksi minimum proof load stress (Reference 5.1).

4.1.5 **Pipe Spacer**: ASTM A53, Grade B - 60 ksi minimum tensile strength (Reference 5.1).

4.1.6 Threaded **Tie Rods**: ASTM A307 - 58 ksi minimum tensile strength (Reference 5.1).

4.1.7 **Shim Plates**: ASTM A36 carbon steel, 58 ksi minimum tensile strength and 36 ksi minimum yield point (Reference 5.1).

4.2 CRITERIA

The following criteria, applicable to ground support Structural Steel and Accessories, were developed in response to requirements found in the Exploratory Studies Facility Design Requirements (ESFDR) document (Reference 5.4).

4.2.1 The structural steel and accessories material and workmanship shall have the same criteria, standards, and QA as required for a repository, to the extent known at the time of structural steel design. (ESFDR 3.2.1.H, H.1, H.1.c)

4.2.2 Structural steel and accessories material and workmanship shall limit adverse effects, to the extent practical, on the long-term performance of the geologic repository and shall not adversely affect in situ site characterization. (ESFDR 3.2.1.M, M.1, M.6)

4.2.3 Special processes for structural steel, including welding and nondestructive testing, shall be controlled and performed by qualified personnel using approved procedures, in accordance with accepted commercial industry standards, as specified in applicable design specifications and drawings. In addition, workmanship criteria shall reflect the applicable current codes, standards, regulations and principles specified in DOE Order 6430.1A, Chapter 0109 (i.e., AISC, ASTM, AWS, and ANSI). (ESFDR 3.2.1.17.A, and B)

4.3 ASSUMPTIONS

Not Used.

4.4 CODES AND STANDARDS

4.4.1 American Institute of Steel Construction (AISC):

AISC M016-89	Manual of Steel Construction, Allowable Stress Design, Ninth Edition

4.4.2 American National Standards Institute (ANSI):

ANSI B18.2.1-81	Square and Hex Bolts and Screws, Inch Series
ANSI B18.2.2-87	Square and Hex Nuts, Inch Series

4.4.3 American Society for Testing and Materials (ASTM):

ASTM A6/A6M-94a	Standard Specification for General Requirements for Rolled Steel Plates, Shapes, Sheet Piling, and Bars for Structural Use
ASTM A36/A36M-94	Standard Specification for Carbon Structural Steel
ASTM A53-94	Standard Specification for Pipe, Steel, Black and Hot-Dipped, Zinc-Coated, Welded and Seamless
ASTM A307-94	Standard Specification for Carbon Steel Bolts and Studs 60,000 psi Tensile Strength
ASTM A370-94	Standard Test Methods and Definitions for Mechanical Testing of Steel Products
ASTM A563-94	Standard Specification for Carbon and Alloy Steel Nuts
ASTM F436-93	Standard Specification for Hardened Steel Washers
ASTM F606-90	Standard Test Methods for Determining the Mechanical Properties of Externally and Internally Threaded Fasteners, Washers, and Rivets

4.4.4 American Welding Society (AWS):

AWS D1.1-94	Structural Welding Code-Steel, 13th Edition
AWS A5.1-91	Specification for Carbon Steel Electrodes for Shielded Metal Arc Welding

4.4.5 Code of Federal Regulations (CFR):

10 CFR 21-95	Title 10, Chapter 1, Part 21, Reporting of Defects and Non-Compliance

4.4.6 Department of Energy (DOE) Orders:

DOE 6430.1A-89	General Design Criteria.

5. REFERENCES

5.1 ESF Ground Support - Structural Steel Analysis, DI: BABEE0000-01717-0200-00003 REV 00.

5.2 Quality Assurance Requirements and Description (QARD), U.S. Department of Energy, DOE/RW-0333P Rev. 5.

5.3 QA Classification Analysis of Ground Support Systems (CI: BABEE0000), DI: BABEE0000-01717-2200-00001 REV 02.

5.4 ESFDR, YMP/CM-0019 Rev. 1/ICN-3.

5.5 U.S. Nuclear Regulatory Commission (NRC) Generic Letter 91-05, April 9, 1991, Licensee Commercial-Grade Procurement and Dedication Programs.

5.6 NRC Generic Letter 89-02, March 21, 1989, Actions to Improve the Detection of Counterfeit and Fraudulently Marketed Products.

5.7 Electric Power Research Institute, (EPRI NP-5652) Guideline for the Utilization of Commercial Grade Items in Nuclear Safety Related Applications (NCIG-07), 1988.

5.8 Electric Power Research Institute, (EPRI NP-7218) Guideline for the Utilization of Sampling plans for Commercial-Grade Item Acceptance (NCIG-19), 1992.

5.9 Baumeister and Marks, Standard Handbook for Mechanical Engineers, Seventh Edition.

5.10 Kiewit/PB Yucca Mountain Project Quality Control Procedure QCP-008, Steel Set Installation Inspection, Rev. 2.

6. USE OF COMPUTER SOFTWARE

Not Used.

7. DESIGN ANALYSIS

7.1 DEFINITIONS

Following are definitions of selected terms used in this analysis:

7.1.1 *Critical Characteristic*: Identifiable and measurable attributes/variables of a Commercial Grade Item (CGI), which, once selected to be verified, provide reasonable assurance that the item received is the item specified and that the item will perform its intended safety function.

7.1.2 *Dedication*: The process by which a CGI is designated for use as a basic component and includes identification and verification of critical characteristics. It also represents the point in time after which a CGI is accepted (dedicated) for a safety-related application and deficiency reporting becomes the responsibility of the party performing the acceptance.

7.1.3 *Commercial Grade Item*: An item that is 1) not subject to design or specification requirements that are unique to nuclear facilities, 2) used in applications other than nuclear facilities or activities, and 3) to be ordered from the manufacturer/supplier on the basis of specifications set forth in the manufacturer's published product description.

7.1.4 *Certificates of Compliance* (C of Cs): A written statement, signed by a qualified party, certifying that the items comply with specific requirements in the purchasing documents. In addition, the C of Cs should confirm that the required commercial grade quality control activities were invoked by the supplier.

7.2 BACKGROUND

CGIs intended for use in nuclear safety-related applications are dedicated to ensure that they are acceptable for their intended use. The term dedicated defines the point in time after acceptance when the CGI becomes subject to 10 CFR 21 reporting requirements and deficiency reporting becomes the responsibility of the party performing the acceptance.

The NRC has published several Generic Letters (References 5.5 and 5.6) that explain their interpretation and position on effective material dedication programs. (The NRC Generic letters are not ESF Program Requirements, but cover the topic of concern.) These letters clearly state that procurement is both a purchasing and an engineering function. The engineering function is essential in any material dedication program to identify the critical characteristics of a CGI for the particular design application and to specify acceptance methods necessary to provide assurance that the critical characteristics are verified for the intended application.

In order to utilize a CGI in a safety-related application, reasonable actions must be taken to assure the item is appropriate for its intended application. As described in Paragraph 7.2.3, below, safety-related items need not be procured from suppliers that maintain a QARD (Reference 5.2) quality assurance program, provided those items meet the CGI definition (Paragraph 7.1.3).

A technical specification for procurement and installation of structural steel and accessories is prepared by the Management and Operating (M&O) Contractor's design organization identifying the technical requirements for the steel materials used in the fabrication of structural steel sets and accessories used for ESF ground support. This steel is not subject to design or specification requirements that are unique to nuclear facilities. Steel sets are used in mine drifts and civil tunnel projects throughout the world. Consequently, such steel sets are used in applications other than nuclear facilities. A commercial grade steel set fabrication

source is then presented with the technical specifications and requested to provide detailed shop drawings. The fabricator's shop drawings are or become their published product description. It must be understood that a fabricator of steel sets identifies the items they can fabricate in their standard catalog. A fabricator does not identify a specific steel set they make. They must rely upon the purchaser's design specification for the dimensions required and the commercial materials identification. The fabricator then produces a set of shop drawings that are presented to the purchaser for review and approval.

The purchaser's design organization conducts a technical evaluation of the fabricator's product description to verify that the product to be supplied is appropriate for the intended application. This is a standard commercial practice in the international mining and tunneling industry. Mine drifts and civil tunnels may vary in dimension, but the structural steel sets are typically fabricated of commercially available materials such as ASTM A36 structural steel, E-70XX weld filler material, and commercial ASTM fasteners (bolts, nuts, and washers). It is because mine drifts and civil tunnels vary in opening dimensions and rock or soil loadings that technical specifications identify the tunnel/drift opening dimensions, design structural shape, steel set dimensions, and material types to the fabricator and the fabricator then provides detail drawings of the fabrication for steel sets.

Upon receipt of the fabricator's detail drawings it becomes the designers responsibility to conduct a technical evaluation of the fabricator's published product description (detail drawings) to verify that the commercial grade steel sets that perform a safety-related function are appropriate for their intended application. This technical evaluation, in combination with the appropriately specified acceptance processes leading to material dedication (further described in this analysis) for the steel sets, provides the assurance that the steel sets are suitable for their intended application, that the items received are the items specified, and that the steel sets can be dedicated as safety-related components after verification of critical characteristics by the purchaser.

It is also important to recognize that steel sets installed in the ESF will not be inaccessible. During the life of the steel sets in the ESF, structural loadings at selected locations will be monitored by strain gages. All of the steel sets will be readily observable for inspection purposes. Most will probably not be subjected to their full design loading capability because the sets were designed to unlikely, worst case rock loads which, for the vast majority of steel sets, will never be seen. Consequently, should a limited number of steel sets exhibit an overstress condition, they can be supplemented by additional structural members or removed and replaced should the need arise.

The M&O addresses the Generic Letter (GL) concerns and ESF programmatic requirements by:

- Preparing a material dedication analysis to select those critical characteristics to be verified and identification of testing/inspection requirements appropriate to provide reasonable assurance that the items specified are the items received.

- Incorporating inspection and testing requirements into the appropriate specification to ensure that the critical characteristics are tested and/or inspected.

- Surveillance of inspection and test results to ensure that the critical characteristics are met and properly documented.

7.2.1 NRC GL 91-05, Licensee Commercial-Grade Procurement and Dedication Programs (Reference 5.5) explains that certain key activities, including engineering involvement, are required to achieve the successful implementation of licensees' programs for material dedication with respect to critical characteristics. Quoting Reference 5.5:

> The term 'critical characteristics' is not contained in [NRC regulations or guidelines] and has no special regulatory significance beyond its use and definition in various industry guides and standards. The NRC first used the term critical characteristics in GL 89-02 as constituting those characteristics which need to be identified and verified during product acceptance as part of the procurement process.

7.2.2 NRC GL 89-02, Actions to Improve the Detection of Counterfeit and Fraudulently Marketed Products (Reference 5.6) states:

> Appropriate engineering involvement is warranted during the procurement and product acceptance processes, including testing, for products used in nuclear power plants. Inadequate engineering involvement has been a common weakness in licensees' procurement programs, particularly when commercial-grade procurements were involved. Involvement of a licensee's engineering staff in an effective procurement process would normally include (1) development of specifications to be used for the procurement of products to be used in the plant, (2) determination of the critical characteristics of the selected products that are to be verified during product acceptance, (3) determination of specific testing requirements applicable to the selected products, and (4) evaluation of test results. The extent of necessary engineering involvement is dependent on the nature and use of the products involved.

7.2.3 A Commercial Grade source, for the purpose of this analysis, is a supplier who has not been qualified to the requirements of the QARD (Reference 5.2). Items and components from a Commercial Grade source for use in safety-related applications need not be procured from suppliers that maintain a quality assurance program which meets the requirements of the QARD, provided that the items meet the CGI definition (Paragraph 7.1.3).

CGIs used in safety-related applications can be shown to be equivalent to a safety-related item purchased as a basic component from a qualified supplier through the implementation of material dedication, provided material dedication is performed in accordance with nuclear industry standards. The Electric Power Research Institute (EPRI) has published a guidance document (Reference 5.7) for dedication

of CGIs that is recognized by licensees within the industry as well as the licensor, the NRC.

A. Commercial Grade Acceptance Methods: The EPRI NP-5652 (Reference 5.7) guidelines states that utilization of a CGI involves two distinct processes: 1) a technical evaluation to assure requirements are specified in the procurement documents, and 2) acceptance methods to reasonably assure the item received is the item specified.

This analysis, combined with the Structural Steel Analysis (Reference 5.1), forms the design basis for the steel set specification. These two analyses constitute the technical evaluation, while the specification provides the method to specify requirements for procurement.

Regarding acceptance methods, the EPRI guideline identifies four methods which may be used to accept a CGI. These four methods are:

- Method 1: Special Tests and Inspections
- Method 2: Commercial Grade Survey of Supplier(s)
- Method 3: Source Verification,
- Method 4: Acceptable Supplier/Item Performance Record.

Any of the above methods, or a combination of methods can be used to accept a given CGI. Selection of the appropriate acceptance method or methods to be used is based on factors such as 1) selected critical characteristics, 2) available supplier information, 3) quality history, and 4) degree of standardization.

After a review of the four acceptance methods available, it is determined that Method 2 (Commercial Grade Survey) in combination with a limited version of Method 1 (Special Tests and Inspections) would be most appropriate for acceptance and dedication of the commercial grade structural steel and accessories used in ground support for the ESF.

Method 2 was selected as the primary acceptance method for the following reasons:

- Typically, the steel sets and accessories are obtained from a single supplier,

- Large groups of similar items (steel sets) are repeatedly procured from one supplier,

- The CGI (steel sets) are an assembly of many parts,

- Destructive testing and detailed inspections on receipt are time consuming, costly, and these tests/inspections are seldom cost effective,

- All of the steel set components are produced to nationally recognized standards (e.g., ASTM).

- The majority of the critical characteristics of the component items can be related to material characteristics that will be tested, documented, and certified on material test reports or conformance certifications,

- Suppliers (fabricators) of steel sets normally have established systems of quality controls for procurement and fabrication of structural steel assemblies, and

- The steel sets and accessories are relatively simple, passive items.

In order to ensure delivery of the specified CGIs, a limited number of special receipt and/or post-installation inspections and tests (Method 1) have been selected to complement the Commercial Grade Survey. These inspections and tests (see Attachment I) will typically consist of non-destructive hardness tests and/or visual inspections on a lot sample of structural steel components at receipt or after installation. One important aspect of acceptance of the CGIs will be the verification of the acceptability of the Certificates of Conformance (C of Cs) and Certified Material Test Reports (CMTRs) or Mill Test Reports (MTRs), as appropriate, during the Commercial Grade Survey, and receipt of these documents prior to or soon after the receipt of the related items. Therefore, CGIs for use in the ESF shall be subject to material dedication as prescribed above and in accordance with the following:

B. Commercial Grade Survey: Commercial Grade fabricators/suppliers shall be subject to a documented Commercial Grade Survey (Method 2 of EPRI NP-5652) to verify that a system of quality controls are in place to control the critical characteristics of the CGIs. For new procurements, this survey should be conducted prior to award to either pre-qualify potential suppliers or to disqualify suppliers with inadequate systems for controlling the critical characteristics of the CGIs. Typical fabricator/supplier controls that should be surveyed, as a minimum, include the items as outlined below (from EPRI NP-5652, Exhibit 3):

- *Quality Program*: Number of QA/QC personnel in relation to total production force, existence and type of quality program documentation, quality program indoctrination and training with regard to handling of CGIs, and management involvement in the quality program.

- *Procurement Document Control:* Do purchase orders (POs) specify technical requirements, and who reviews and accepts POs for CGIs?

- *Control of Subsuppliers:* Is there an approved suppliers list (ASL) for CGI subsuppliers, how is a subsupplier added to the list, were subsuppliers

evaluated prior to award of contracts, does the system assure only qualified subsuppliers are furnishing CGIs if there is no ASL, are orders for CGIs only issued to qualified subsuppliers or are they issued solely based on price, and is subsupplier documentation reviewed and acceptable?

- *Test and Inspection Controls*: Are receipt inspections performed for CGIs to any procedure, are CGI drawings or catalogs available and used for receipt inspections, what do CGI receipt inspections include, are they documented and maintained, what items have receipt inspections, is there a system to ensure CGIs are inspected against PO requirements, are any critical characteristics tested, are in-process and final inspections conducted to assure product conformance, are testing devices (if used) calibrated to an approved program, how are deficiencies dispositioned, and who performs the tests and inspections?

- *Material Control and Traceability*: Is the supplier's material control system adequate, is there a system of marking and identifying CGIs, and are CGIs traceable from their source?

- *Control of Special Processes (Welding)*: Are welders and welding procedures documented and qualified to AWS D1.1 or equivalent standards, is weld filler material controlled and traceable, and are non-destructive examinations performed and documented in accordance with the applicable codes and procurement documents?

- *Control of Handling and Storage:* Are CGIs properly packaged for shipment, are CGIs properly stored, and traced from storage through to shipment? Who is responsible for CGI packaging and shipment release, and how are non-conforming items handled?

The survey criteria and supplier controls will vary from item to item. A Commercial Grade Survey procedure will be developed, and will include a checklist of items/controls (for each critical characteristic) that will be evaluated at the fabricator's and/or supplier's facilities using EPRI NP-7218 (Ref. 5.8), Exhibit 3 and the above outline as a general guideline. The system of fabricator/supplier controls in place need not be formal, documented procedures. However, the system of controls should 1) confirm that the item's critical characteristics are controlled, and 2) assure that the fabricator's/supplier's activities control the CGIs supplied.

C. Critical Characteristics: The Critical Characteristics of Attachment I will be documented on acceptable C of Cs, CMTRs or MTRs (see Attachment I), and will be verified during the Commercial Grade Survey. Should the results of the survey not provide reasonable assurance that the items furnished comply with those Critical Characteristics, or results in a determination that the fabricator

does not have a Commercial Grade system of controls, additional steps can be taken to provide assurance in the quality of the items furnished. If the fabricator/supplier has no system of controls, this may result in the disqualification of the fabricator and/or suppliers. Normally, however, deficiencies identified during the Commercial Grade survey will be corrected by the fabricator/supplier instituting additional controls or by utilizing other acceptance methods.

D. Sample Selection: The sampling methods considered appropriate for dedication of CGIs covered by this analysis are testing and inspection of a statistically significant number of the items. QARD Section 10.2.4 (Reference 5.2) requires that when statistical sampling is used to verify the acceptability of a group of items, the statistical sampling method shall be based on recognized standard practice. For purposes of this analysis, "recognized standard practice" is considered satisfied by development of sampling procedures based upon methods outlined in the EPRI guidelines for acceptance of CGIs (Reference 5.8). The approach utilizes statistical sampling population and develops rationale for the selection of overall sampling procedures (see Attachment I).

The selection of sampling procedures should consider applicable selection factors (Reference 5.8) such as lot formation, complexity of items, acceptance history, national standards, performance history, cost effectiveness of tests or inspections and correlations between critical characteristics. The EPRI guideline also implies that non-qualified information from the commercial grade suppliers should be used to aid in establishing the inspection lot size. The guidelines states: "The confidence in the homogeneity of the lot is directly related to how the lot is formed." Therefore, the use of production traceability of lots, such as heat number, production number or batch number; production line item lots from a single product manufacturer; production line item lots from multiple product manufacturers and multiple production line item lots from single product manufacturers are typically used in establishing lot formation (Reference 5.8).

CGIs shall be subject to acceptance in accordance with a sampling procedure based on the lot sample acceptance methodology of EPRI NP-7218 to verify the critical characteristics of the material (see Paragraph 7.3.3). For a description of the lot sample methods to be employed for each CGI, see Attachment I.

E. Inspection and Testing: Inspection and testing of representative samples shall be performed to verify that the critical characteristics of the CGIs conform to the minimum critical material and dimensional characteristics as determined in Attachment I and summarized in Paragraphs 7.3.2.2.A and B for the purpose of acceptance and dedication. In addition to special tests and inspections, C of Cs (and, in some instances, CMTRs and/or MTRs) should be furnished for the CGIs. Adequacy and traceability of the C of Cs (and CMTRs/MTRs) should

be established during the Commercial Grade Survey and will be furnished prior to or soon after receipt of the items.

F. Buy American: In addition to the above, the M&O procurement documents currently require that all Commercial Grade products be manufactured in the U.S. to accepted industry standards. In addition, the procurement of certain items (i.e., bolts, nuts, washers) are subject to controls in existing contracts which prevent the use or acquisition of suspect or counterfeit items.

7.3 STRUCTURAL STEEL GROUND SUPPORT IN ESF

7.3.1 Design Basis

Structural steel ground support in the ESF will consist of steel sets and lagging for the tunnels. The configuration and material properties of steel sets and lagging have been determined by separate analyses (Reference 5.1).

7.3.2 Descriptions/Functions and Critical Characteristics

7.3.2.1 Component Item Descriptions/Functions

The purpose of the structural steel ground support system, comprised of the steel sets, lagging, and accessories, is to maintain a stable, functional opening. Based on a review of Reference 5.1, the basic structural components of the steel set ground support system and a summary of their descriptions/functions are as follows. Also see Attachment I for more detailed descriptions and an evaluation of critical characteristics and identification of verification methods.

A. Steel Sets are curved, wide-flange structural steel ring beams that act as compression rings to transfer the rock loads onto the precast concrete invert segments.

B. Lagging is a beam element that spans the gap between steel sets to prevent spalling and to distribute the loosening load onto the ring beam while preventing loosened rock from falling from between steel sets.

C. Tie rods are threaded steel tension rods that run between the steel sets to laterally brace the sets.

D. Pipe spacers are used to maintain separation of steel sets during erection and to maintain steel set stability and prevent lateral buckling in combination with the tie rods.

E. Connections of structural steel framing include accessories of bolts, nuts, and weld materials. Performance of structural steel components depends upon the developed strength of the connections and therefore the material properties of the connections.

F. Shims are full size flat plates used as filler material or spacers between the inserts and/or the segments of the steel sets or between the pipe spacers and the steel sets. Shims are subject to compression forces and help to maintain the structural continuity of the steel sets.

G. Washers are placed under nuts and/or bolt heads (especially when oversized holes are used) to facilitate tightening of the nuts and/or bolts without gouging caused by misalignment or skew of the bolts in the holes. For connections using ASTM A307 bolts, washers are optional. Where used, failure of the washers will more than likely not result in failure of the connection; therefore, reduced sampling methods will be employed.

7.3.2.2 Structural Steel and Accessories Critical Characteristics

The principal Critical Design Attribute for structural steel and accessories that directly relates to material dedication is the structural capacity of the members which is a function of the material grade and physical dimensions of the structural steel, fasteners, and welding materials. Following is a brief summary of the critical characteristics for the items to be dedicated. A detailed determination of the critical characteristics may be found in Attachment I.

A. Critical Characteristics (Material Properties)

The Critical Characteristics of structural steel and accessories have been selected (see Attachment I) and are summarized below. These critical characteristics as well as other material and physical characteristics necessary to confirm that the items conform to the applicable national code or standard will be documented on C of Cs (and/or CMTRs/MTRs as appropriate).

1. Structural steel shapes and plates: ASTM A36 - 58 ksi minimum tensile strength, 36 ksi minimum yield point.

2. Welded steel set connection: AWS A5.1, E70XX, 70 ksi minimum tensile strength.

3. Bolted steel set connections:

   - ASTM A307 bolts, 58 ksi minimum tensile strength, and hardness in accordance with ASTM A307, Table 1.

   - ASTM A563, heavy hex, Grade DH nuts, 175 ksi proof load stress; and hardness in accordance with ASTM A563, Table 3.

   - ASTM F436 through-hardened carbon steel washers, Type 1, minimum hardness 38 to 45 HRC.

4. Tie rods: ASTM A307, Grade C or higher strength, 58 ksi minimum tensile strength; and hardness in accordance with ASTM A307, Table 1. For tie rod nuts, see item 3, above.

5. Pipe spacers: ASTM A53, Grade B black steel pipe, 60 ksi minimum tensile strength.

NOTE: For any of the above items, material of equal or greater strength may be substituted subject to A/E approval.

B. Critical Characteristics (Dimensional)

The physical dimensions of the structural steel and certain accessories identified above are critical to the performance of these items and shall comply with the A/E approved shop drawings, the dimensional tolerances in Reference 5.1, and the following:

1. Structural steel shapes and plates: ASTM A6
2. Bolts: ANSI/ASME B18.2.1
3. Nuts: ANSI/ASME B18.2.2
4. Tie Rods: ANSI/ASME B18.2.1
5. Pipe spacers: ASTM A53, Sections 15, 16, and Table X2.2.

It should be noted that some of the dimensional tolerances identified in Attachment VII of Reference 5.1 may differ from those national standards, shown above. In case of conflict, the relaxed tolerances in Reference 5.1 will govern.

7.3.3 Sampling Method

The sampling method considered appropriate for receipt inspection and testing of steel materials is the lot sample acceptance methodology based on the guidelines contained in EPRI NP-7218, Table 2-1. A sampling procedure that conforms to the EPRI NP-7218 generic guidelines and the more detailed sampling requirements on the worksheets of Attachment I should be developed by the Constructor to address

receipt inspection of items and welds. The Constructor shall submit this sampling procedure to the A/E for approval.

7.3.3.1 Inspection/Testing Criteria for Items to be Dedicated

A. Receipt Inspection/Testing

Documented receipt verification inspection and testing of a lot sample of items classified QA-1 and QA-5 that are purchased from a Commercial Grade source shall include (also see Attachment I):

1. Dimensional/visual inspection for conformance with purchasing documents (shop drawings and specification).

2. Verification that certification documents (C of Cs, CMTRs or MTRs) required by the purchasing documents are received, acceptable, and consistent with the results of the Commercial Grade survey.

3. Inspection to verify that damage was not sustained during shipping.

4. Verification that the items received are the items identified on the purchasing documents and accompanying C of Cs, CMTRs or MTRs.

5. Inspection of welds on a sample of items in accordance with Attachment I.

6. Mechanical testing of structural steel shapes and plates, ASTM A36 materials, shall consist of hardness testing, which can be used to obtain a quick approximation of tensile strength, in accordance with the methods described in ASTM A370, Sections 15 through 18 as follows:

   - For ASTM A36 carbon steel materials, Brinell hardness shall be a minimum of 119 (corresponds to approximate tensile strength of 58 ksi).

   - For materials other than ASTM A36 steels, Brinell hardness shall be derived from ASTM A370, Table 2B corresponding to the approximate tensile strength range for the material from the applicable ASTM Standard for that material.

   - Hardness scales other than the Brinell scale may be used by utilizing ASTM A370, Table 2B to convert the Brinell hardness numbers to the other scale.

The use of hardness testing is currently being used in the commercial nuclear industry as a means of assessing the relative mechanical strength of carbon steel products. As noted in ASTM A370, Section 15 and in the Mechanical Engineer Handbook, Chapter 5 (Reference 5.9, pp. 5-15 to 5-17), hardness is a composite mechanical property that includes yield strength, work hardening, true tensile strength, modulus of elasticity, and others. Due to the empirical relationships of hardness to such properties as tensile strength, ductility, and fatigue strength, items likely to be deficient may be detected and rejected by verification of the hardness value.

7. Visual confirmation that the bend radius of the steel sets is reasonably uniform.

8. Verification that the tie rod hole spacing conforms to requirements.

B. Post Installation Inspection

Prior to completing dedication and acceptance of each steel set assembly, visual verification that the steel set assembly is able to be installed, that it makes positive contact with the rock to the extent practical, that the set is properly founded on the concrete invert segment curb, and that the set spacing conforms to requirements will be performed after the jacking/expansion process is complete. This will confirm the adequacy of the steel set bend radius. In addition, a minimum of one out of every 10 steel sets shall be randomly selected to have all bolted connections on that steel set visually inspected for snug tightness as defined in AISC M016.

C. Material Control

In addition to the receipt and post installation inspection requirements, above, the following controls are needed to ensure the integrity of the dedicated CGIs after receipt and prior to installation:

1. Verify that storage of materials is in accordance with manufacturer's recommendations and approved Constructor storage requirements.

2. Ensure that materials received are controlled to preclude inadvertent use of items prior to receipt verification.

3. Ensure materials that are purchased and accepted for use in Q applications are identified to distinguish them from those like items purchased and accepted for use in non-Q applications.

4. Ensure materials that are purchased and accepted for use in Q applications are segregated from those like items purchased and accepted for use in non-Q applications.

8. CONCLUSIONS

The information in Section 7 and Attachment I provides the necessary architect/engineer design inputs for providing material dedication requirements in the specification section for structural steel and accessories.

9. ATTACHMENTS

ATTACHMENT	TITLE
I	Commercial Grade Item (CGI) Critical Characteristics Identification Worksheets.

ATTACHMENT I
COMMERCIAL GRADE ITEMS (CGI)
CRITICAL CHARACTERISTICS IDENTIFICATION WORKSHEETS

INTRODUCTION:

The following worksheets provide a rationale for the selection of critical characteristics for the Q-items (identified in the body of this analysis) and verification methods for those characteristics based on the guidelines in EPRI NP-5652 and NP-7218. Selection of Normal or Reduced sampling methods is based on the relative importance of each item to the overall performance of the ground support system (e.g., steel sets & lagging), and on a review of lots of steel set & accessory items and associated C of Cs, CMTRs & MTRs delivered to date. The Tightened sampling method is not considered appropriate since the Commercial Grade (CG) Survey will provide a reasonable degree of assurance in the quality of items delivered, and only limited (non-destructive) receipt inspection and verification is needed.

Using a success rate of 100% of 32 samples inspected is considered to be a satisfactory acceptance history to justify relaxing the receipt inspection sampling from the Normal method to the Reduced method. This is based on the fact that for lots of over 225 items, the Normal sampling method only requires a maximum of 32 samples (EPRI NP-7218, Table 2-1). Based on historical delivery rates and lot sizes, using the Normal sampling plan for the first 32 samples and a Reduced plan thereafter will still provide a reasonably acceptable percentage of items sampled at receipt. For items not critical to the performance of the ground support system, the Reduced sampling method is considered appropriate throughout the receipt acceptance process.

The use of a hardness test and/or a magnet test can be used to verify with reasonable assurance that selected steel items are acceptable, or can be used to detect deficiencies and as a means to reject items. The magnet test will verify that the item contains some iron. The results of the CG Survey, C of Cs, with or without a hardness test (correlated to tensile strength using ASTM A370, Table 2B) can provide reasonable assurance that the minimum tensile strength attribute is present. It is important to note that these tests will not provide quantitative evidence of the tensile strength or that the items are carbon steel. However, once the hardness attributes in combination with the presence of iron are verified, one can be reasonably assured that the item will perform its safety function.

The frequency of testing necessary to represent material hardness was selected as an average of 3 tests to be slightly less stringent than the hardness verification & calibration testing of from 3 to 5 tests in ASTM A370 and related hardness testing standards. A post-installation minimum test frequency of 20% (one in five) for the steel sets was based on the current Constructor's steel set installation inspection procedure (Kiewit/PB QCP-008 - Reference 5.10). This inspection frequency is judged to provide adequate assurance in the acceptability of the as-installed steel sets. Reference 5.10 can still be used, with only minor modifications.

WORKSHEET FOR IDENTIFYING CRITICAL CHARACTERISTICS FOR A COMMERCIAL GRADE ITEM

Parent Component: Steel Set Assembly
Part/Item: W-Shape Ring Beam Segments (Including Inserts)

1. *What is the Function of the Item and how could it fail in service?*

The W-shape ring beam, which consists of wall, crown, insert, and foot segments, carries the long term rock loads (including utility and seismic loads) primarily in ring compression and transfers those loads into the precast concrete invert segments. These primary components maintain a stable, functional tunnel opening when using steel sets for ground support. The W-shape ring beam segments could fail in compression (buckling), bending, or shear. Failure of the individual segments of the steel set could also result in failure of the overall steel set.

2. *Based on the Safety Function of the item, what characteristics are considered critical to ensuring the item performs its Safety Function?*

a. *Product Identification Characteristics:*
- Mark (Mk) Nos. from fabricator shop drawings

b. *Physical Attributes:*
- Minimum tensile strength 58 ksi
- Minimum yield point 36 ksi
- Dimensions comply with specification requirements
- Radius to accommodate nominal tunnel diameter
- Spacing of tie rod holes to comply with specification requirements and located along steel set centerline

c. *Performance Characteristics:*
- Makes positive contact with tunnel wall
- Founded on invert segment curb
- Spaced at nominal 2, 4, or 6 ft based on rock conditions encountered

3. *How will the critical characteristics of item 2, above be verified?*

a. Mk numbers will be verified on receipt by comparing marks on segments to shop drawings.

b. Minimum tensile strength will be verified based on the results of the Commercial Grade (CG) Survey, receipt of acceptable C of Cs with accompanying CMTRs and MTRs, & hardness test on lot samples.

c. Minimum yield point will be verified based on the results of the CG Survey and receipt of acceptable C of Cs with CMTRs and MTRs.

d. Verification that the steel sets comply with specification requirements will be based on the results of the CG Survey, receipt of acceptable MTRs, and lot sample receipt inspection/measurement of the following: 1) The radius of the steel set segments will be verified by successful installation on top of the invert segment curb, and by the successful expansion of the steel set such that positive contact with the rock is achieved to the extent practical, i.e. consistent with standard industry practice; and 2) Tie rod hole spacing and location, & W-shape dimensions (see below) will be measured during lot sample receipt inspection.

e. For the verification of the performance characteristics of item 2.c, above, see item 4.b, below.

4. *What inspection, testing & sampling methods are required, and what sample populations are recommended?*

   a. In addition to the normal receipt inspection, randomly selected lot samples for inspection of dimensions and hardness test shall be performed after receipt. Hardness value used will be the average of **3** tests at random locations on each segment sampled, to be used as a basis for rejection of an item or lot as non-conforming. Beam dimensions (**depth, flange width & thickness**) will be measured at a minimum of **one** random location to confirm shape size. Overall segment dimensions need not be measured on receipt as these characteristics will be verified by successful installation. For each segment heat number, because the segments are critical to the performance of the steel set assembly, the test population shall be based on the **Normal** Sampling Plan of EPRI NP-7218, Table 2-1. Once a successful history has been established (100% acceptance for a total of **32** samples), the sampling may be changed to the **Reduced** Sampling Plan of Table 2-1. Defects may be cause for rejection of a lot, and will result in increased sampling frequencies to a **Tightened** Sampling Plan on that lot (if not rejected), and on subsequent lots until satisfactory evidence of a history of successful results (see above) are again achieved.

   b. Post installation inspection of the items in Paragraph 2.c, above, shall be performed on a minimum of **20%** of all steel sets. The inspection shall consist of visually verifying positive contact with the tunnel rock wall to the extent practical, measuring steel set spacing, and visually verifying proper base plate location on the curb of the concrete invert.

WORKSHEET FOR IDENTIFYING CRITICAL CHARACTERISTICS FOR A COMMERCIAL GRADE ITEM

Parent Component: Steel Set Assembly
Part/Item: Base Plates and Connection Plates

1. *What is the Function of the Item and how could it fail in service?*
The base plates spread the steel set load onto the precast concrete invert segments in bearing on the concrete. The connection plates join the segments of the steel set together so they will function as a unit, and transfer the load in one segment into the other segment through compression bearing. The base and connection plates could fail in compression. In addition, if the base plates are of insufficient size (area) or are offset from the curb face, the base plates could fail in bending, could fail in sliding, or could cause localized bearing or shear failure in the curb of the concrete invert. Failure of these plates could also result in failure of the overall steel set. However, failure of the connection plates is considered unlikely as the loads which would cause failure are well in excess of anticipated load conditions. In addition, the compression area on the W-shape is many times smaller than the connection plates, and would fail in compression buckling long before the connection plates would. Therefore, a reduced sampling plan will be used for the plates.

2. *Based on the Safety Function of the item, what characteristics are considered critical to ensuring the item performs its Safety Function?*
   a. *Product Identification Characteristics:*
      - N/A
   b. *Physical Attributes:*
      - Minimum tensile strength 58 ksi
      - Minimum yield point 36 ksi
      - Dimensions comply with specification requirements
   c. *Performance Characteristics:*
      - None

3. *How will the critical characteristics of item 2, above be verified?*
   a. Minimum tensile strength will be verified based on the results of the CG Survey, and receipt of acceptable C of Cs with accompanying CMTRs or MTRs.
   b. Minimum yield point will be verified based on the results of the CG Survey and receipt of acceptable C of Cs with CMTRs or MTRs.
   c. Verification that the base plate dimensions comply with specification requirements will be based on the results of the CG Survey, receipt of acceptable MTRs, and lot sample receipt inspection/measurement of dimensions.

4. *What inspection, testing & sampling methods are required, and what sample populations are recommended?*
In addition to the normal receipt inspection, randomly selected lot samples for inspection of critical dimensions (**thickness and plan dimensions**) on segment base and connection plates shall be performed after receipt. Note that each steel set segment will be furnished with two connection plates - one at each end. For each segment heat number, because it is unlikely that failure of these plates would occur, the base/connection plate test population shall be based on the **Reduced** Sampling Plan of EPRI NP-7218, Table 2-1. Plates sampled may be the plates on the segments selected for receipt inspection. Both plates on each segment sample selected will be inspected. Defects may be cause for rejection of a lot, and will result in increased sampling frequencies on that lot (if not rejected) and on subsequent lots until satisfactory evidence of a history of successful results (see above) are again achieved.

WORKSHEET FOR IDENTIFYING CRITICAL CHARACTERISTICS FOR A COMMERCIAL GRADE ITEM

Parent Component: Steel Set Assembly
Part/Item: Shim Plates

1. *What is the Function of the Item and how could it fail in service?*
The shim plates act as spacers in the joints between the steel set segments (or insert segment) and act in compression bearing. Like the connection plates, the shim plates transfer the load in one segment into the other segment through compression bearing. The shim plates could theoretically fail in compression or could slide out of the joint if loaded laterally. However, failure of the shim plates is considered unlikely as the loads which would cause failure are well in excess of anticipated load conditions. In addition, the compression area on the W-shape is many times smaller than the shim plates, and would fail in compression buckling long before the shim plates would. Therefore, since failure of the shim plates is unlikely, reduced sampling methods will apply.

2. *Based on the Safety Function of the item, what characteristics are considered critical to ensuring the item performs its Safety Function?*
   a. *Product Identification Characteristics:*
      - N/A
   b. *Physical Attributes:*
      - Shim plates should conform to ASTM A36
      - Shim plates shall be made of carbon steel
      - Dimensions comply with specification requirements
   c. *Performance Characteristics:*
      - N/A

3. *How will the critical characteristics of item 2, above be verified?*
   a. Conformance with ASTM A36 will be verified based on the results of the CG Survey, and receipt of acceptable Certificates of Compliance (C of Cs).
   b. Assurance that the shims were made of carbon steel will be verified by a magnet test.
   c. Verification that the shim plate dimensions comply with specification requirements will be based on the results of the CG Survey, receipt of acceptable C of Cs, and minimal lot sample receipt inspection/measurement of dimensions.

4. *What inspection, testing & sampling methods are required, and what sample populations are recommended?*
In addition to the normal receipt inspection, randomly selected lot samples for inspection of critical dimensions (**thickness and plan dimensions**) and verification of metallic properties using a magnet on shim plates shall be performed after receipt. For each shim plate thickness (or heat number), because failure of the shim plates is unlikely, the shim plate test population shall be based on the **Reduced** Sampling Plan of EPRI NP-7218, Table 2-1. Defects may be cause for rejection of a lot, and will result in increased sampling frequencies on that lot (if not rejected) and on subsequent lots until satisfactory evidence of a history of successful results (see above) are again achieved.

WORKSHEET FOR IDENTIFYING CRITICAL CHARACTERISTICS FOR A COMMERCIAL GRADE ITEM

Parent Component: Steel Set Assembly
Part/Item: Connection Assembly (**Bolts**, Nuts, Washers & Welds)

1. *What is the Function of the Item and how could it fail in service?*

   The connection bolts, along with the nuts, washers & welds act to join the segments of the steel set together so they will function as a unit, and transfers the load in one segment into the other segment through shear alone, or in shear and tension (if bending is present). The connection bolts could fail in shear and/or tension under loads that exceed the design load conditions. Failure of the bolts could also result in failure of the overall steel set; however, by design, the bolts are only loaded to a fraction of their design capacity under worst case rock and seismic load conditions.

2. *Based on the Safety Function of the item, what characteristics are considered critical to ensuring the item performs its Safety Function?*

   a. *Product Identification Characteristics:*
      - ASTM A307 Head Markings

   b. *Physical Attributes:*
      - Minimum tensile strength 58 ksi
      - Hardness in accordance with ASTM A307, Table 1
      - Dimensions comply with specification requirements

   c. *Performance Characteristics:*
      - None

3. *How will the critical characteristics of item 2, above be verified?*

   a. Minimum tensile strength will be verified based on the results of the CG Survey and receipt of acceptable C of Cs (with or without CMTRs).

   b. Minimum hardness will be verified based on the results of the CG Survey and receipt of acceptable C of Cs.

   c. Verification that the bolt head dimensions, bolt diameter and grade marking comply with specification requirements will be based on the results of the CG Survey, receipt of acceptable C of Cs, and lot sample receipt inspection/measurement of dimensions and verification of head markings.

4. *What inspection, testing & sampling methods are required, and what sample populations are recommended?*

   In addition to the normal receipt inspection, randomly selected lot samples for inspection of critical dimensions (**diameter**) and head markings on connection bolts shall be performed after receipt. For each bolt size and lot (or heat) number, because the bolts are lightly loaded, the bolt test population shall be based on the **Reduced** Sampling Plan of EPRI NP-7218, Table 2-1. Defects may be cause for rejection of a lot, and will result in increased sampling frequencies on that lot (if not rejected) and on subsequent lots until satisfactory evidence of a history of successful results (see above) are again achieved.

WORKSHEET FOR IDENTIFYING CRITICAL CHARACTERISTICS FOR A COMMERCIAL GRADE ITEM

Parent Component: Steel Set Assembly
Part/Item: Connection Assembly (Bolts, **Nuts**, Washers & Welds)

1. *What is the Function of the Item and how could it fail in service?*

The connection nuts, along with the bolts, washers & welds act to join the segments of the steel set together so they will function as a unit by tensioning the bolts and compressing the connection plates together. The connection nuts could fail in tension (proof load) under loads well in excess of the design load conditions. Failure of the nuts, under certain unlikely conditions, might result in failure of the bolts in the connecting joint thus resulting in possible failure of the overall steel set.

2. *Based on the Safety Function of the item, what characteristics are considered critical to ensuring the item performs its Safety Function?*

a. *Product Identification Characteristics:*
- ASTM A563 grade marking (DH) on one face

b. *Physical Attributes:*
- Minimum proof load stress 175 ksi
- Hardness in accordance with ASTM A563, Table 3
- Dimensions comply with specification requirements

c. *Performance Characteristics:*
- None

3. *How will the critical characteristics of item 2, above be verified?*

a. Minimum proof load stress will be verified based on the results of the CG Survey and receipt of acceptable C of Cs (with or without CMTRs).

b. Minimum hardness will be verified based on the results of the CG Survey and receipt of acceptable C of Cs.

c. Verification that the nut dimensions and grade marking comply with specification requirements will be based on the results of the CG Survey, receipt of acceptable C of Cs, and lot sample receipt inspection/measurement of dimensions and verification of grade marking.

4. *What inspection, testing & sampling methods are required, and what sample populations are recommended?*

In addition to the normal receipt inspection, randomly selected lot samples for inspection of critical dimensions (**diameter & thickness**) and grade marking on connection nuts shall be performed after receipt. For each nut size and lot (or heat) number, because the nuts are lightly loaded and failure is unlikely, the nut test population shall be based on the **Reduced** Sampling Plan of EPRI NP-7218, Table 2-1. Defects may be cause for rejection of a lot, and will result in increased sampling frequencies on that lot (if not rejected) and on subsequent lots until satisfactory evidence of a history of successful results (see above) are again achieved.

WORKSHEET FOR IDENTIFYING CRITICAL CHARACTERISTICS FOR A COMMERCIAL GRADE ITEM

Parent Component: Steel Set Assembly
Part/Item: Connection Assembly (Bolts, Nuts, **Washers** & Welds)

1. *What is the Function of the Item and how could it fail in service?*

The connection washers, along with the bolts, nuts & welds act to join the segments of the steel set together so they will function as a unit. The washers, typically used at oversized holes in the connecting plates and where high strength bolts are used, facilitate tightening of the nuts and/or bolts without causing gouging in the connected parts due to misalignment or skew of the bolts in the bolt holes. For connections using ASTM A307 bolts, washers are optional. If used, the connection washers could fail in compression bearing. However, it is considered unlikely that failure of a washer could result in progressive failure of the nut, bolt, or connection. Primarily, the washer is used as a good workmanship practice in accordance with the AISC Code. Therefore, since failure of the washers is unlikely and will not result in failure of the connection, reduced sampling methods will be employed.

2. *Based on the Safety Function of the item, what characteristics are considered critical to ensuring the item performs its Safety Function?*

a. *Product Identification Characteristics:*
- N/A

b. *Physical Attributes:*
- Washers should conform to ASTM F436
- Washers should have a minimum hardness of 38 to 45 HRC
- Washer dimensions to comply with ASTM F436, Tables 2 & 4

c. *Performance Characteristics:*
- N/A

3. *How will the critical characteristics of item 2, above be verified?*

a. Conformance with ASTM F436 will be verified based on the results of the CG Survey, and receipt of acceptable Certificates of Compliance (C of Cs).

b. Hardness will be verified based on the results of the CG Survey, and receipt of acceptable C of Cs.

c. Verification that the washer dimensions comply with specification requirements will be based on the results of the CG Survey, receipt of acceptable C of Cs, and minimal lot sample receipt inspection/measurement of dimensions.

4. *What inspection, testing & sampling methods are required, and what sample populations are recommended?*

In addition to the normal receipt inspection, randomly selected lot samples for inspection of critical dimensions (size & thickness) and verification of metallic properties using a magnet on connection washers shall be performed after receipt. For each washer size and lot (or heat) number, because the washers perform no safety function, the washer test population shall be based on the **Reduced** Sampling Plan of EPRI NP-7218, Table 2-1. Defects may be cause for rejection of a lot, and will result in increased sampling frequencies on that lot (if not rejected) and on subsequent lots until satisfactory evidence of a history of successful results (see above) are again achieved.

WORKSHEET FOR IDENTIFYING CRITICAL CHARACTERISTICS FOR A COMMERCIAL GRADE ITEM

Parent Component: Steel Set Assembly
Part/Item: Connection Assembly (Bolts, Nuts, Washers & **Welds**)

1. *What is the Function of the Item and how could it fail in service?*
The connection welds (electrodes), along with the bolts, nuts & washers act to join the segments of the steel set together so they will function as a unit by connecting the W-shapes to the connection plates. The welds attaching the W-shape webs to the connection/base plates are the primary shear resisting welds in the connection. The connection welds could fail in tension (direct or due to bending) or shear. Failure of the welds, under certain conditions, might result in failure of the connecting joint thus resulting in possible failure of the overall steel set. However, the welds provided are relatively lightly loaded in shear, have a capacity many times that of the demand load, and primarily provide continuity between the steel set W-shape and the connection plates.

2. *Based on the Safety Function of the item, what characteristics are considered critical to ensuring the item performs its Safety Function?*
   a. *Product Identification Characteristics:*
      - N/A
   b. *Physical Attributes:*
      - Minimum tensile strength 70 ksi
      - Dimensions (throat & length) comply with specification requirements
      - Weld quality complies with AWS D1.1 criteria
   c. *Performance Characteristics:*
      - None

3. *How will the critical characteristics of item 2, above be verified?*
   a. Minimum tensile strength will be verified based on the results of the CG Survey and receipt of acceptable CMTRs and/or MTRs.
   b. Verification that the weld dimensions comply with specification requirements will be based on the results of the CG Survey, and lot sample receipt inspection/measurement of dimensions and 100% visual survey.
   c. Verification that weld quality complies with AWS Code requirements will be accomplished relying on the results of the CG Survey, 100% visual examination and 10% magnetic particle examination of all welds at the fabricator's facility, and 100% visual examination on receipt on a lot sample of (accessible) steel set segment connection plates. The W-shape web welds should be the ones receiving the magnetic particle examinations at the fabricator's shop.

4. *What inspection, testing & sampling methods are required, and what sample populations are recommended?*
In addition to the normal receipt inspection, randomly selected lot samples of steel set segments for visual inspection of 100% of the welds on the lot samples shall be performed after receipt. For each lot of steel set segments received, the number of segments to be have welds examined shall be based on the **Normal** Sampling Plan of EPRI NP-7218, Table 2-1. Welds sampled may be the welds on the steel set segments selected for receipt inspection (see previous worksheet for steel set segments). Once a successful history has been established (100% acceptance for a total of **32** samples), the sampling may be changed to the **Reduced** Sampling Plan of Table 2-1. Defects may be cause for rejection of a lot, and will result in increased sampling frequencies on that lot (if not rejected) and on subsequent lots until satisfactory evidence of a history of successful results (see above) are again achieved.

WORKSHEET FOR IDENTIFYING CRITICAL CHARACTERISTICS FOR A COMMERCIAL GRADE ITEM

Parent Component: Lagging Assembly
Part/Item: Channel Lagging Beam

1. *What is the Function of the Item and how could it fail in service?*
The channel lagging beams carry the long term rock loads (including seismic loads) in shear and bending and transfer those loads into the steel set ring beam. This maintains a stable, functional tunnel opening. The channel lagging beam could fail in bending or shear, or the ends could be dislodged from the steel set. Failure of the lagging beams could also result in the failure of the overall lagging assembly, but would probably not result in the failure of the steel set assembly.

2. *Based on the Safety Function of the item, what characteristics are considered critical to ensuring the item performs its Safety Function?*
   a. *Product Identification Characteristics:*
      - Mk numbers from fabricators shop drawings
   b. *Physical Attributes:*
      - Minimum tensile strength 58 ksi
      - Minimum yield strength 36 ksi
      - Dimensions comply with specification requirements
   c. *Performance Characteristics:*
      - None

3. *How will the critical characteristics of item 2, above be verified?*
   a. Mk numbers will be verified on receipt by comparing marks on lagging beams to shop drawings.
   b. Minimum tensile strength will be verified based on the results of the CG Survey, receipt of acceptable C of Cs (with accompanying CMTRs or MTRs), & hardness test on lot samples.
   c. Minimum yield strength will be verified based on the results of the CG Survey and receipt of acceptable C of Cs with CMTRs or MTRs.
   d. Verification that the lagging beam dimensions comply with specification requirements will be based on the results of the CG Survey, receipt of acceptable C of Cs with CMTRs or MTRs, and lot sample receipt inspection/measurement of dimensions.

4. *What inspection, testing & sampling methods are required, and what sample populations are recommended?*
In addition to the normal receipt inspection, randomly selected lot samples for inspection of dimensions and hardness test shall be performed after receipt. Hardness value used will be the average of **3** tests at random locations on each nominal 2 ft or 4 ft length of C-shape beam sampled and will only be used as a basis for rejection of an item. C-shape lagging beam critical dimensions (**depth, web thickness, and flange width & thickness**) will be measured at a minimum of **one** location. For each delivery and heat number, because this item is critical to the performance of the lagging assembly (and rock support), the test population shall be based on the **Normal** Sampling Plan of EPRI NP-7218, Table 2-1. Once a successful history has been established (100% acceptance for a total of **32** samples), the sampling may be changed to the **Reduced** Sampling Plan of Table 2-1. Defects may be cause for rejection of a lot, and will result in increased sampling frequencies on that lot (if not rejected) and on subsequent lots until satisfactory evidence of a history of successful results (see above) are again achieved.

WORKSHEET FOR IDENTIFYING CRITICAL CHARACTERISTICS FOR A COMMERCIAL GRADE ITEM

Parent Component: Lagging Assembly
Part/Item: Lagging Clamps

1. *What is the Function of the Item and how could it fail in service?*

The QA-1 & QA-5 lagging clamps support the lagging beam under long term rock loads. The Constructor also has the option of using a clamp configuration that is non-Q (identified in reference 5.1). The Q-class clamps could fail in friction, bending, or shear. However, failure of this item could possibly result in failure of the lagging beams. Even though failure of the lagging clamps is unlikely, their failure might result in failure of the lagging beam; therefore, Normal sampling methods will be employed, but only on the Q-class clamps.

2. *Based on the Safety Function of the item, what characteristics are considered critical to ensuring the item performs its Safety Function?*

a. *Product Identification Characteristics:*
- N/A

b. *Physical Attributes:*
- Lagging clamps should conform to ASTM A36
- Lagging clamps should be made of carbon steel
- Minimum tensile strength 58 ksi
- Dimensions comply with specification requirements

c. *Performance Characteristics:*
- N/A

3. *How will the critical characteristics of item 2, above be verified?*

a. Conformance with ASTM A36 and minimum tensile strength will be verified based on the results of the CG Survey, and receipt of acceptable C of Cs.

b. Verification that the lagging clamps are made of carbon steel will be by use of a magnet test.

c. Verification that the lagging clamp dimensions comply with specification requirements will be based on the results of the CG Survey, receipt of acceptable C of Cs, and minimal lot sample receipt inspection/measurement of dimensions.

4. *What inspection, testing & sampling methods are required, and what sample populations are recommended?*

In addition to the normal receipt inspection, randomly selected lot samples for inspection of critical dimensions (thickness & size) and verification of metallic properties using a magnet on the clamps shall be performed after receipt. For each clamp size and lot (or heat) number, because failure of this item could result in failure of the lagging beam, the clamp test population shall be based on the **Normal** Sampling Plan of EPRI NP-7218, Table 2-1. Once a successful history has been established (100% acceptance for a total of **32** samples), the sampling may be changed to the **Reduced** Sampling Plan of Table 2-1. Defects may be cause for rejection of a lot, and will result in increased sampling frequencies on that lot (if not rejected) and on subsequent lots until satisfactory evidence of a history of successful results (see above) are again achieved.

WORKSHEET FOR IDENTIFYING CRITICAL CHARACTERISTICS FOR A COMMERCIAL GRADE ITEM

Parent Component: Lagging Assembly
Part/Item: Lagging Clamp Accessories (Carriage Bolts, Nuts & Washers)

1. *What is the Function of the Item and how could it fail in service?*

   The lagging clamp accessories of carriage bolts, nuts & washers in Q-class lagging clamp connections tie the lagging clamps to the lagging beams and to the steel set in a friction type connection. The bolts & nuts are in tension (proof load), and the washers are in compression. The bolts, nuts & washers could fail in shear, tension or compression (washers). Failure of the lagging clamp bolts, nuts, & washers could possibly result in failure of the overall lagging assembly. Although failure of these accessory items might result in failure of the lagging beam, their anticipated loading is well below their design capacity; therefore, reduced sampling methods will apply.

2. *Based on the Safety Function of the item, what characteristics are considered critical to ensuring the item performs its Safety Function?*

   a. *Product Identification Characteristics:*
      - N/A

   b. *Physical Attributes:*
      - Bolts conform to ASTM A307
      - Nuts conform to ASTM A563, Grade (DH)
      - Washers conform to ASTM F436
      - Dimensions comply with specification requirements

   c. *Performance Characteristics:*
      - N/A

3. *How will the critical characteristics of item 2, above be verified?*

   a. Conformance with ASTM A307 (Bolts), A563 (Nuts), and F436 (Washers) will be verified based on the results of the CG Survey, and receipt of acceptable Certificates of Compliance (C of Cs).

   b. Verification that the lagging clamp accessory items dimensions comply with specification requirements will be based on the results of the CG Survey, receipt of acceptable C of Cs, and minimal lot sample receipt inspection/ measurement of dimensions.

4. *What inspection, testing & sampling methods are required, and what sample populations are recommended?*

   In addition to the normal receipt inspection, randomly selected lot samples for inspection of critical dimensions (diameter & thickness) on lagging clamp accessories shall be performed after receipt. For each accessory and lot (or heat) number, because these items perform no safety function, the test population shall be based on the **Reduced** Sampling Plan of EPRI NP-7218, Table 2-1. Defects may be cause for rejection of a lot, and will result in increased sampling frequencies on that lot (if not rejected) and on subsequent lots until satisfactory evidence of a history of successful results (see above) are again achieved.

WORKSHEET FOR IDENTIFYING CRITICAL CHARACTERISTICS FOR A COMMERCIAL GRADE ITEM

Parent Component: Tie Rod Assembly
Part/Item: Tie Rod

1. *What is the Function of the Item and how could it fail in service?*

   The tie rod acts in tension to laterally brace the steel sets during erection and against compression buckling and weak axis column buckling under long term rock loads by limiting the unbraced length of the steel set ring beam in weak axis bending. The tie rod could fail in tension, and failure of the tie rod could also result in failure of the overall tie rod assembly, possibly resulting in buckling of the steel set.

2. *Based on the Safety Function of the item, what characteristics are considered critical to ensuring the item performs its Safety Function?*

   a. *Product Identification Characteristics:*
      - N/A

   b. *Physical Attributes:*
      - Minimum tensile strength 58 ksi
      - Hardness in accordance with ASTM A307, Table 1
      - Dimensions comply with specification requirements

   c. *Performance Characteristics:*
      - None

3. *How will the critical characteristics of item 2, above be verified?*

   a. Minimum tensile strength will be verified based on the results of the CG Survey and receipt of acceptable C of Cs with CMTRs or MTRs.

   b. Minimum hardness will be verified based on the results of the CG Survey and receipt of acceptable C of Cs with CMTRs or MTRs.

   c. Verification that the tie rod dimensions comply with specification requirements will be based on the results of the CG Survey, receipt of acceptable C of Cs with CMTRs or MTRs, and lot sample receipt inspection/measurement of dimensions.

4. *What inspection, testing & sampling methods are required, and what sample populations are recommended?*

   In addition to the normal receipt inspection, randomly selected lot samples for inspection of dimensions (**diameter & length**) on tie rods shall be performed after receipt. For each tie rod lot (or heat) number, because this item is critical to the performance (stability) of the steel set assembly, the tie rod test population shall be based on the **Normal** Sampling Plan of EPRI NP-7218, Table 2-1. Once a successful history has been established (100% acceptance for a total of **32** samples), the sampling lot size may be changed to the **Reduced** Sampling Plan of Table 2-1. Defects may be cause for rejection of a lot, and will result in increased sampling frequencies on that lot (if not rejected) and on subsequent lots until satisfactory evidence of a history of successful results (see above) are again achieved.

WORKSHEET FOR PARTS CLASSIFICATION & IDENTIFYING CRITICAL CHARACTERISTICS FOR A COMMERCIAL GRADE ITEM

Parent Component: Tie Rod Assembly
Part/Item: Tie Rod Nut

1. *What is the Function of the Item and how could it fail in service?*

   The tie rod nut resists a tension load on the tie rod from the steel sets. The tie rod nut could fail under the tension load in the tie rod under loads well in excess of the design load conditions. Failure of the tie rod nut could also result in failure of the overall tie rod and tie rod assembly, possibly resulting in buckling of the steel set.

2. *Based on the Safety Function of the item, what characteristics are considered critical to ensuring the item performs its Safety Function?*

   a. *Product Identification Characteristics:*
      - ASTM A563 grade marking (DH) on one face

   b. *Physical Attributes:*
      - Minimum proof load stress 175 ksi
      - Hardness in accordance with ASTM A563, Table 3
      - Dimensions comply with specification requirements

   c. *Performance Characteristics:*
      - None

3. *How will the critical characteristics of item 2, above be verified?*

   a. Minimum proof load stress will be verified based on the results of the CG Survey and receipt of acceptable C of Cs with CMTRs or MTRs.

   b. Minimum hardness will be verified based on the results of the CG Survey and receipt of acceptable C of Cs with CMTRs or MTRs.

   c. Verification that the nut dimensions and grade marking comply with specification requirements will be based on the results of the CG Survey, receipt of acceptable C of Cs with CMTRs or MTRs, and lot sample receipt inspection/measurement of dimensions and verification of grade marking.

4. *What inspection, testing & sampling methods are required, and what sample populations are recommended?*

   In addition to the normal receipt inspection, randomly selected lot samples for inspection of critical dimensions (diameter & thickness) and grade markings on tie rod nuts shall be performed after receipt. For each nut size and lot (or heat number), because this item is loaded well below its proof load capacity, the nut test population shall be based on the **Reduced** Sampling Plan of EPRI NP-7218, Table 2-1. Defects may be cause for rejection of a lot, and will result in increased sampling frequencies on that lot (if not rejected) and on subsequent lots until satisfactory evidence of a history of successful results (see above) are again achieved.

WORKSHEET FOR IDENTIFYING CRITICAL CHARACTERISTICS FOR A COMMERCIAL GRADE ITEM

Parent Component: Tie Rod Assembly
Part/Item: Pipe Brace

1. *What is the Function of the Item and how could it fail in service?*

The pipe brace acts in compression to laterally brace the steel sets against compression buckling and limit the unbraced length of the steel set ring beam in weak axis bending. The pipe brace is needed because the tie rod is not effective in compression. The pipe brace could fail (buckle) in compression. However, the pipe brace is typically not loaded by action (deflection) of the steel sets, but by the tensioning of the tie rod - a load only about 1/2 of the capacity of the brace. Failure of the pipe brace (only on the first and last steel sets in series of steel sets) could also result in failure of the overall tie rod assembly, possibly resulting in buckling of the steel set.

2. *Based on the Safety Function of the item, what characteristics are considered critical to ensuring the item performs its Safety Function?*

a. *Product Identification Characteristics:*
   - N/A

b. *Physical Attributes:*
   - Minimum tensile strength 60 ksi
   - Dimensions comply with specification requirements

c. *Performance Characteristics:*
   - None

3. *How will the critical characteristics of item 2, above be verified?*

a. Minimum tensile strength will be verified based on the results of the CG Survey, receipt of acceptable C of Cs, & hardness test on lot samples.

b. Verification that the pipe brace dimensions comply with specification requirements will be based on the results of the CG Survey, receipt of acceptable MTRs, and lot sample receipt inspection/measurement of dimensions.

4. *What inspection, testing & sampling methods are required, and what sample populations are recommended?*

In addition to the normal receipt inspection, randomly selected lot samples for inspection of critical dimensions (outside diameter and wall thickness), and hardness test shall be performed after receipt. Hardness value used will be the average of **3** tests at random locations on each pipe brace sampled.. For each delivery and lot (or heat) number, because this item is loaded to less than 50% of available capacity and is critical only on the end sets in a series, the test population shall be based on the **Normal** Sampling Plan of EPRI NP-7218, Table 2-1. Once a successful history has been established (100% acceptance for a total of **32** samples), the sampling may be changed to the **Reduced** Sampling Plan of Table 2-1. Defects may be cause for rejection of a lot, and will result in increased sampling frequencies on that lot (if not rejected) and on subsequent lots until satisfactory evidence of a history of successful results (see above) are again achieved.

WORKSHEET FOR PARTS CLASSIFICATION & IDENTIFYING CRITICAL CHARACTERISTICS FOR A COMMERCIAL GRADE ITEM

Parent Component: Tie Rod Assembly
Part/Item: Tie Rod Shims & Washers

1. *What is the Function of the Item and how could it fail in service?*

   The tie rod shims and washers will be under compression when the tie rod is tensioned to ensure firm contact between the tie rod nut and/or the pipe brace and the web of the steel set. The tie rod shims & washer could fail in compression due to the tension in the tie rod . Failure of the tie rod shim or washer would not result in failure of the overall tie rod nor the tie rod assembly. Therefore, since failure of these items is unlikely and will not result in failure of the tie rod, reduced sampling methods will apply.

2. *Based on the Safety Function of the item, what characteristics are considered critical to ensuring the item performs its Safety Function?*

   a. *Product Identification Characteristics:*
      - N/A

   b. *Physical Attributes:*
      - Shims conform to ASTM A36
      - Washers conform to ASTM F436
      - Dimensions comply with specification requirements

   c. *Performance Characteristics:*
      - N/A

3. *How will the critical characteristics of item 2, above be verified?*

   a. Conformance with ASTM A36 (Shims), and F436 (Washers) will be verified based on the results of the CG Survey, and receipt of acceptable Certificates of Compliance (C of Cs).

   b. Verification that the tie rod shim and washer dimensions comply with specification requirements will be based on the results of the CG Survey, receipt of acceptable C of Cs, and minimal lot sample receipt inspection/ measurement of dimensions.

4. *What inspection, testing & sampling methods are required, and what sample populations are recommended?*

   In addition to the normal receipt inspection, randomly selected lot samples for inspection of critical dimensions (**diameter, plan dimensions & thickness**) and verification of metallic properties using a magnet on tie rod shims and washers shall be performed after receipt. For each shim or washer size and lot (or heat) number, because these items perform no safety function, the test population shall be based on the **Reduced** Sampling Plan of EPRI NP-7218, Table 2-1. Defects may be cause for rejection of a lot, and will result in increased sampling frequencies on that lot (if not rejected) and on subsequent lots until satisfactory evidence of a history of successful results (see above) are again achieved.