AN ANALYSIS OF A SPENT FUEL TRANSPORTATION CASK UNDER SEVERE FIRE ACCIDENT CONDITIONS

Christopher S. Bajwa
Spent Fuel Project Office
U.S. Nuclear Regulatory Commission
Washington, D.C.
(301) 415-1237, csb1@nrc.gov

ABSTRACT

Title 10 of the Code of Federal Regulations Part 71 section 73(c)(4), (10 CFR 71.73(c)(4)) requires that transportation packages used to ship radioactive material must be designed to resist an engulfing fire of a 30 minute duration and prevent release of radioactive material to the environment.

In July, 2001, a derailed train carrying hazardous materials caught fire in a railroad tunnel in Baltimore, Maryland, and burned for several days. Although the occurrence of a fire of such duration during the shipment of spent nuclear fuel is unlikely, questions were raised about the performance of spent nuclear fuel casks under conditions similar to those experienced in the Baltimore tunnel fire incident.

The U.S. Nuclear Regulatory Commission evaluates the performance of spent fuel transportation casks under accident conditions. The National Transportation Safety Board is responsible for investigating railroad accidents and identifying the probable cause(s) and offers recommendations for safety improvements. They are currently investigating the Baltimore tunnel fire accident. This paper assesses the performance of a spent fuel transportation cask with a welded canister under severe fire conditions. The paper describes the analytic model used for the assessment and presents a discussion of the preliminary results.

INTRODUCTION

Fire is a concern in the transportation of radioactive material, as transportation accidents can cause fires that might involve spent fuel transportation packages.

On July 18, 2001, a freight train derailed in a tunnel in Baltimore, Maryland. A fire involving hazardous materials occurred as a result of the derailment. The fire burned for several days. Although fires as severe as the one that occurred in Baltimore are rare, they do happen. Several questions have been raised, both in the media and by the public, regarding how a spent fuel cask would perform if exposed to a fire for longer than 30 minutes. This analysis was done to help answer those questions.

This paper discusses the Baltimore tunnel fire, transportation of spent nuclear fuel, the analysis performed on a spent fuel cask under severe fire conditions, including the ANSYS® model that was developed for the analysis, and finally the preliminary results of the analysis including a discussion of the significance of those results.

The Baltimore Tunnel Fire

The CSX freight train involved in the accident traveled through the Howard Street tunnel in downtown Baltimore, Maryland. The details of the accident as recorded in this paper were derived from media reports concerning the accident, and press releases provided by the National Transportation Safety Board (NTSB).

The Howard Street tunnel is a single track rail tunnel, 1.65 miles in length, with generally a 0.8% upward grade from the entrance to the exit. The original tunnel was constructed in 1895, with additions being made to the original length to reach the current length. The tunnel is constructed of mostly concrete and refractory brick, and its ventilation system was not operating at the time of the derailment. The tunnel has an oval shape cross-section measuring approximately 22 feet high by 27 feet wide, but varies slightly along the length of the tunnel.

The CSX freight train consisted of 3 locomotives and 60 cars. As the train traveled through the tunnel there was a derailment of 11 of the 60 rail cars, the cause of which is currently under investigation. A tanker railcar transporting approximately 28,600 gallons of liquid tripropylene was ruptured in the derailment and subsequently caught fire. Liquid tripropylene carries a National Fire Protection Association hazards rating of 3 for flammability, which is the same rating as gasoline. This rating means that tripropylene can be ignited at ambient conditions.

The freight train was also transporting tanker cars full of hydrochloric acid and other hazardous materials, which were not thought to have contributed to the fire. Reports from emergency responders indicate that the tripropylene tanker car burned for no more than 12 hours.

Temperatures in the tunnel during the fire were reported (in the local media) to be as high as 1,500°F (815°C). There are indications that portions of the tunnel may have reached this temperature; however, the actual time/temperature history of the fire is not known. It is not believed at this time that the temperature of the tunnel was at 1,500°F for an extended period of time, nor was this temperature pervasive. The NTSB

ML022340066

investigation of the accident may provide information that will aid the staff in determining the actual tunnel temperatures.

TRANSPORTATION OF SPENT NUCLEAR FUEL

The occurrence of the Baltimore Tunnel fire has raised questions about the performance of Spent Fuel Transportation Casks should a cask be involved in an accident and fire similar to what occurred in Baltimore. Current NRC regulations require that transportation casks be evaluated for a fully engulfing fire accident with an average flame temperature of no less that 1,475°F (800°C) for a period of no less than 30 minutes. Transportation casks must be subjected to an open pool fire test or analyzed for a fire event meeting the aforementioned criteria. Casks must maintain shielding and criticality control functions throughout the fire event and post-fire cool down.

Description of Spent Fuel Transportation Cask

The spent fuel transportation cask used in this analysis is an NRC approved cask design that utilizes a welded canister, called a multi-purpose canister (MPC), to hold spent fuel. The MPC has an integral fuel basket with space for 24 Pressurized Water Reactor (PWR) fuel assemblies. The MPC is placed within the transportation overpack for shipment. The outer shell of the overpack is fabricated of carbon steel and is 0.25" thick. The next layer is a neutron shield, a polymeric material, which is strengthened by a network of stainless steel stiffeners. The neutron shield layer with the integral stiffeners is almost 4.5" thick. The next layer, the gamma shield layer, is actually 6 layers of carbon steel plates and is a total of 6.5" thick. The overpack inner shell is stainless steel and is 2.5" thick.

Impact limiters are affixed to the ends of the transportation overpack to prevent damage to the MPC in case of a cask drop accident. A diagram of the spent fuel cask (MPC and overpack) is provided in Figure 1.

Description of Cask Analysis Model

A model of the cask was developed in ANSYS® in order to analyze the performance of the cask when subjected to a severe fire. The thermal model is a 2-dimensional planar (circular) cross section of the cask, utilizing PLANE55 thermal elements for conduction and SURF151 surface effect elements for convection and radiation. The model consists of several layers as described above, and is shown in Figure-2. The model has approximately 7,500 elements.

The material properties used in the analysis were from the cask vendor's SAR. The neutron shield region is modeled as a composite of the neutron shield polymer material and the stainless steel stiffeners. This composite region is given an effective thermal conductivity and effective density to simplify the modeling process. Similarly, the analysis model utilizes two homogenized fuel "regions" rather than a detailed model of the fuel basket and individual fuel assemblies. The outer region represents the area between the outer fuel basket and the MPC shell. The inner region models the bulk of the fuel assemblies and fuel basket, and is a homogenization of the fuel assemblies (fuel pellets, fuel rods, and rod fill gas), fuel basket, and helium fill gas within the MPC.

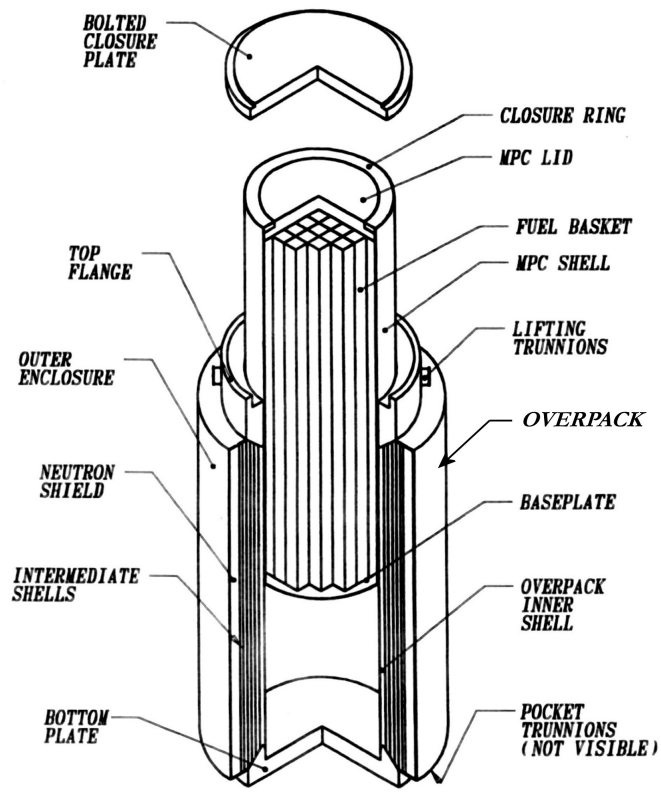

Figure 1. Canister (MPC) and Overpack

The homogenization for this analysis takes into account the main heat transfer mechanisms in the fuel basket region including conduction, radiation, and to a lesser degree, convection. The values used in this analysis were based on effective conductivity and average density and specific heat calculations performed by the vendor. The procedure the vendor used for determining the effective conductivity and density values is briefly described below.

First, a detailed model of a single fuel assembly (including fuel pellets, fuel cladding and rod fill gasses) was developed to account for all heat transfer mechanisms involved, including conduction, radiation, and convection. This model was verified against spent fuel temperature data to ensure that it provided an accurate fuel assembly temperature profile to work with.

Next the vendor solved the fuel assembly model to obtain a temperature difference across the assembly for a given heat generation. Using the calculated temperature difference and the

geometry of the fuel assembly an effective conductivity for the fuel assembly region was calculated using an empirical relation.

Finally, the effective conductivity region was modeled to assure that the temperature profile closely matched that of the original detailed fuel model. The vendor further reduced the homogenized fuel assembly and fuel basket model to obtain two homogenized fuel regions. The effective conductivity values for these two regions were used in this analysis.

Separate calculations were performed by the vendor for the fuel assembly and fuel basket region to obtain an average density and average heat capacity. The values for these were also used in the analysis.

It should be noted that when fuel is homogenized the peak temperatures of the fuel will be less than with a detailed fuel model. This must be accounted for when attempting to draw conclusions about peak fuel cladding temperatures from homogenized fuel models.

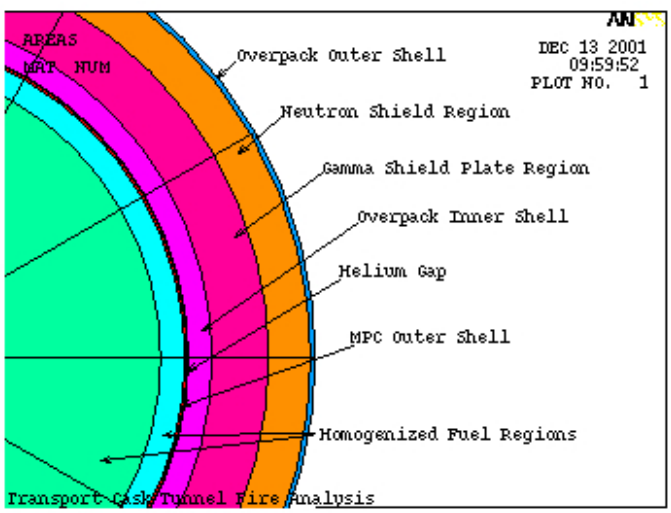

Figure 2.Cask Analysis Model

ANALYSIS OF SPENT FUEL TRANSPORTATION CASK

Boundary Conditions

Federal Regulations in 10 CFR 71.71 describe normal conditions for transportation of spent fuel casks as an ambient of 100°F, with a specified insolation to account for heat flux from sunlight on the surface of the cask. It was assumed that the cask would be exposed to sunlight before the fire exposure. The surface of the cask was also radiating heat to the environment, and was given an emissivity value of 0.85 for the analysis. This is based on the emissivity value of the painted cask surface. Radiation is modeled using surface effect elements (SURF151). Convection is also applied to the surface of the cask using surface effect elements, and the convective heat transfer coefficient is given a value of 0.891 BTU/ft^2-hr-°F (5.1 W/m-°C). This value was derived from the cask vendor's analysis, and is roughly equivalent to natural convection.

Internally, heat generation was applied to the inner and outer fuel regions to simulate a 20kW internal heat loading. This internal heat loading was present for all parts of the analysis. Radial conduction was modeled through all components of the cask, including the fuel region. The fuel region model also accounts for radiation and convection in the formation of an effective thermal conductivity value.

The normal (pre-fire) condition defined above is run to steady state to achieve a normal condition temperature distribution for the cask. This temperature distribution was checked against an analysis performed by the cask vendor, and was found to be in good agreement with the vendor's results. A plot of the normal condition temperatures for the cask is provided. (See Figure 3.)

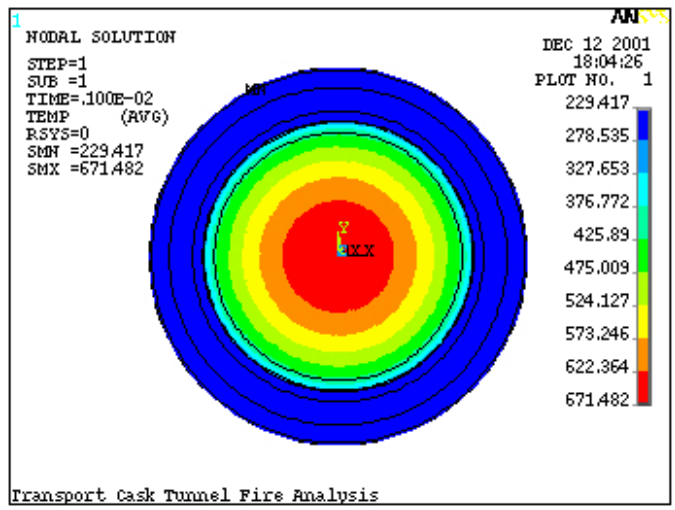

Figure 3.Transport Cask Normal Condition Temperature Distribution

The cask was then subjected to a fire transient which consisted of the following conditions: an ambient of 1,500°F (815.5°C), no solar heat flux (insolation), and an external convective coefficient of 2.5 BTU/ ft^2-hr-°F (14.2 W/m-°C). The convection coefficient is based upon the temperature and velocity of gasses in an open pool fire. Gas velocities in a pool fire can range from 13 feet/sec (4 m/sec) to almost 40 feet/sec (12 m/sec)[10]. The convective coefficient used in the analysis is based on a gas velocity of over 40 feet/sec and serves to simulate the turbulent nature of the fire environment. The fire condition described above was run until the fuel region approached the fuel clad temperature limits described in the next section.

Following the fire transient, the cask was returned to normal conditions for 20 hours. For this post-fire transient, no solar

heat flux (insolation) was applied. The ambient temperature was once again 100°F (38°C).

ANALYSIS RESULTS AND DISCUSSION

The results of the analysis show a maximum outer fuel region temperature of 1,015°F (546°C), which occurred at 19.7 hours into the transient. The temperature distribution of the cask at the end of the fire (7 hours) is provided. (See Figure 4.) A graph depicting the temperature rise of the cask skin, outer fuel region and fuel basket centerline is also provided. (See Figure 5.) Due to the large mass of the cask, the maximum internal temperature of the MPC occurred over 12 hours after the end of the fire.

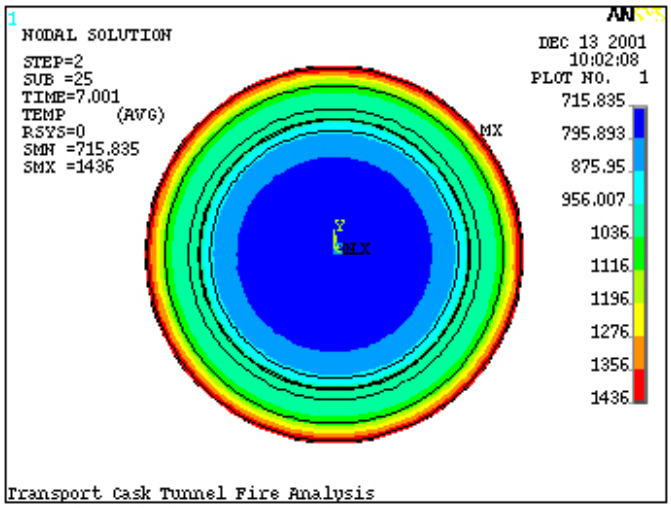

Figure 4.Accident Condition Temperatures at 7 Hours

It should be noted that the maximum fuel region temperatures are not necessarily a precise indicator of what the maximum spent fuel cladding temperatures would be for this event. Spent fuel assemblies, when modeled accurately, will show a significant temperature gradient across the assembly, with the highest temperature (hottest fuel pin) usually near the center of the assembly. The gradient can be as much as 40°F from the coolest fuel pin to the hottest fuel pin in the assembly[9]. Fuel assembly homogenization tends to reduce the magnitude of the temperature gradient, producing an average temperature for the fuel assembly rather than a true maximum fuel temperature. Therefore, this analysis conservatively predicted that actual fuel cladding temperatures could be as much as 40 degrees (F) higher than the calculated maximum fuel region temperature.

The currently accepted short term fuel temperature limit for Zircalloy clad spent fuel is 1,058°F (570°C)[4]. This limit is based on creep experiments done at this temperature. Two fuel cladding test samples held at 1,058°F (570°C) remained undamaged (i.e., there was no significant observable damage) for times up to 30 and 71 days. These results indicate that in order for fuel cladding to be damaged, the 1,058°F (570°C) limit would have to be exceeded continuously for more than 71 days.

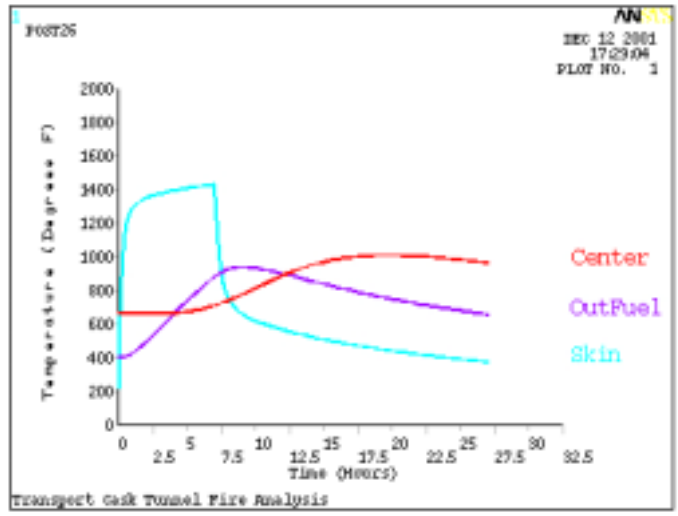

Figure 5.Time vs. Temperature Plot

For a 7-hour fire and 20-hour cooldown, a conservative estimate of the maximum fuel cladding temperature would be 1,055°F (568°C). (This number is reached by adding 40°F to the maximum inner fuel region temperature). This temperature would only be present for a short amount of time (less than 1 hour). Therefore, it is reasonable to conclude that no cladding damage would have occurred due to this fire event.

The MPC, which contains the spent fuel, is a seal welded pressure vessel and is designed to American Society of Mechanical Engineers Boiler and Pressure Vessel Code, Section III, Subsection NB[8]. In order for an external release of radioactive material to occur, the welds of the MPC would have to fail. The MPC has a maximum internal pressure limit specified at 125 psig (868 kPa) for accident conditions; however, this limit is only a fraction of the pressure that would be necessary to possibly cause a seal weld failure. A pressure calculation was completed using the methodology provided in the cask vendor's SAR, and the pressure in the MPC at the highest cask internal temperature was found to be 98 psig (676 kPa).

Conservatism in Cask Analysis

Several assumptions made in this analysis could be considered conservative. First, because the model was a 2-dimensional model, axial conduction is neglected. Therefore, temperatures obtained in the model will be higher than in an actual cask. Second, the rail car that would carry the cask for transport was not modeled. The transport railcar would have prevented the spent fuel cask from being fully engulfed by the fire and would have provided an additional heat sink. With the cask in place on the transport railcar, less heat would be directly absorbed by the cask, and cask temperatures would be lower. Third, natural convective cooling was assumed after the fire event. In reality,

if a transport cask was involved in an accident and a fire ensued, there would be forced cooling (such as a hose-stream or a cooling fan) provided to the surface of the cask from emergency responders. This would reduce the internal temperature rise of the cask. Finally, the internal heat load for the cask was the maximum allowed for the cask design (20 kW). It is unlikely that a cask would be carrying fuel at the maximum design thermal load.

CONCLUSION

It is clear from the preliminary analysis described in this paper that this specific transportation cask design could endure an engulfing fire of 1,500°F (816°C) for 7 hours or more with no spent fuel cladding failure. An extension of this study to include the effects of the cask transport rail car, the surrounding tunnel walls, and the effects of airflow within the tunnel would provide additional insight into the performance of a spent fuel transportation cask in an actual tunnel fire event. The robust nature of such casks is clearly evident in the results of this analysis.

An adjustment to the boundary conditions of this analysis may be made in the future to better simulate the actual conditions of the Baltimore tunnel fire. Current information indicates that the fire did not likely burn at full strength for the duration of the event, which means that if temperatures as high as 1,500°F (816°C) were reached during the fire, it is unlikely that the temperature remained that high for a prolonged period of time. As more information becomes available, the analysis described in this paper will be refined.

ACKNOWLEDGMENTS

I would like to acknowledge Mr. Richard M. Downs, Jr. of the National Transportation Safety Board, and Mr. Thomas E. Michener and Ms. Judith M. Cuta of the Pacific Northwest National Labs for their assistance in writing this paper.

REFERENCES

[1] Title 10, Code of Federal Regulations, Part 71, *Packaging and Transportation of Radioactive Material*, Jan. 1, 2000, United States Government Printing Office, Washington, D.C.

[2] Title 49, Code of Federal Regulations, Subchapter C, *Hazardous Materials Regulations*, Oct. 1, 2000, United States Government Printing Office, Washington, D.C.

[3] National Transportation Safety Board Advisory, *Investigation into the Derailment of CSX Train L41216 in Howard Street Tunnel, Baltimore, Maryland*, August 7, 2001, Washington, D.C.

[4] Johnson, A.B., Gilbert, E.R., *Technical Basis for Storage of Zircalloy-Clad Spent Fuel in Inert Gases*, Pacific Northwest Laboratory, PNL-4835, September 1983.

[5] NRC Docket Number 72-1008, *Final Safety Analysis Report for Holtec International Storage Transport and Repository Cask System* (HI-STAR 100 Cask System), Holtec Report HI-210610, Volumes I and II, March 30, 2001.

[6] ANSYS, Inc., "ANSYS Users Guide for Revision 5.7.1," ANSYS, Inc., Canonsburg, PA, USA. 2001.

[7] Siegel, R. and Howell, J., 1992, Thermal Radiation Heat Transfer, 3rd ed., Hemisphere Publishing Co., p. 1040.

[8] ASME Boiler and Pressure Vessel Code, Section III, Subsection NB, American Society of Mechanical Engineers, 1995.

[9] Creer, J.M., et. al., "TN-24P PWR Spent Fuel Storage Cask: Testing and Analysis," EPRI NP-5128, Electric Power Research Institute, Palo Alto, California, 1987.

[10] Nakos, J.T., and Keltner, N.R., *The Radiative-Convective Partitioning of Heat Transfer to Structures in Large Pool Fires*, Heat Transfer Phenomena in Radiation, Combustion, and Fires, ASME-HTD-Vol. 106, pp 381-387, 1989.