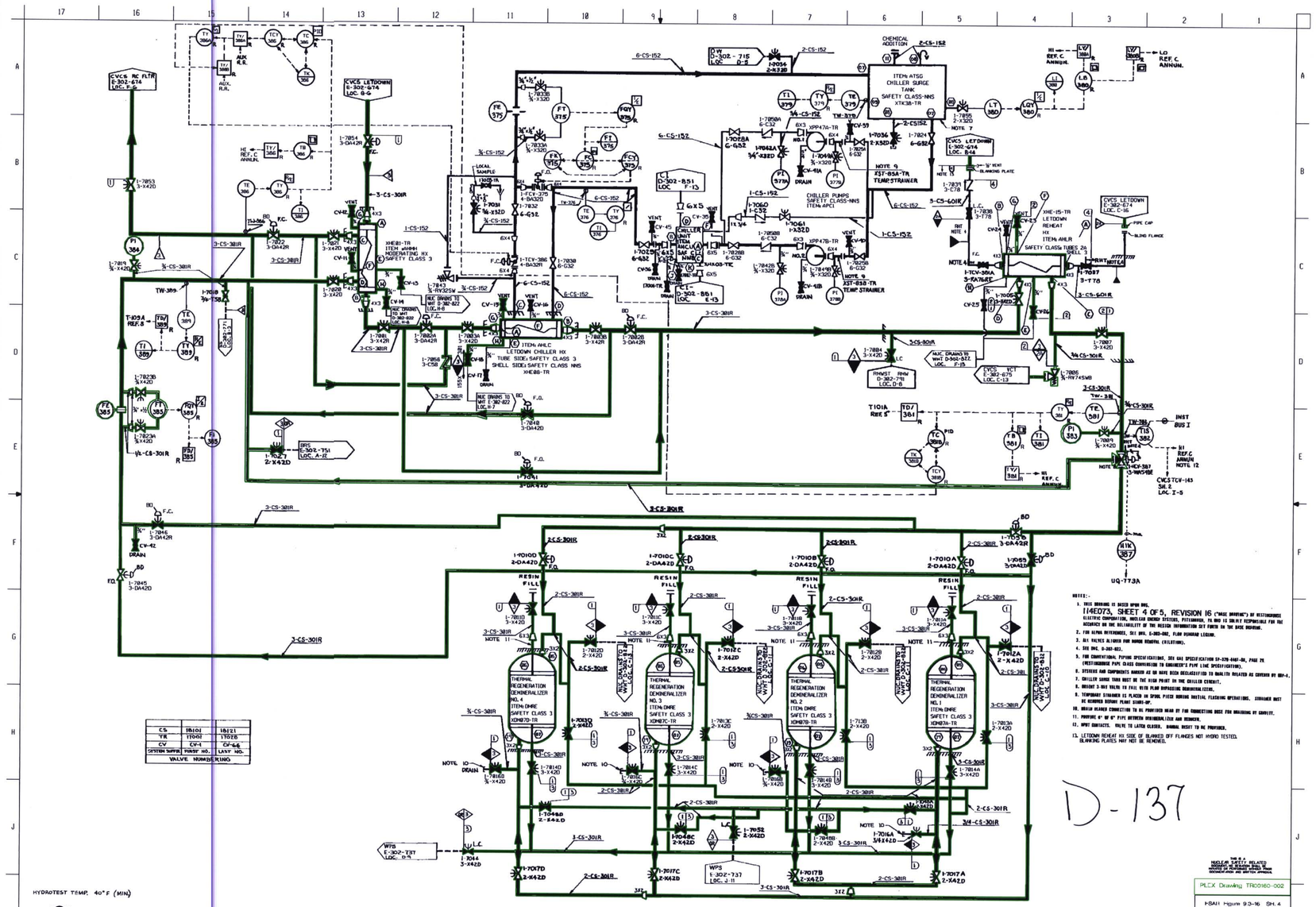

CS	1B101	1B121
YR	17001	17026
CV	CV-1	CV-66
SYSTEM SUFFIX	PURSF NO.	LASY NO.
VALVE NUMBERING		

HYDROTEST TEMP. 40°F (MIN)

4	390	381	600	382	≤1%	750	750		
3	20	140	150	140	≤1%	190	22		
2	250	140	320	340	≤1%	375	330		
1	250	140	300	360	≤1%	290	275		
0	PSIG	°F	PSIG	°F	DURATION	DESIGN PRESS	DESIGN TEMP		
	NORMAL		UPSET						

DESIGN DATA

NOTES:-

1. THIS DRAWING IS BASED UPON DWG. 114E073, SHEET 4 OF 5, REVISION 16 ("MASS DRAWING") OF WESTINGHOUSE ELECTRIC CORPORATION, NUCLEAR ENERGY SYSTEMS, PITTSBURGH, PA AND IS SOLELY RESPONSIBLE FOR THE ACCURACY OR THE RELIABILITY OF THE DESIGN INFORMATION SET FORTH ON THE MASS DRAWING.
2. FOR ALPHA DIFFERENCES, SEE DWG. E-302-002, FLOW DIAGRAM LEGEND.
3. ALL VALVES ALIGNED FOR NORMAL READING (DILEVITIES).
4. SEE DWG. D-302-022.
5. FOR CONVENTIONAL PIPING SPECIFICATIONS, SEE GAI SPECIFICATION SP-378-0001-00, PAGE 29 (WESTINGHOUSE PIPE CLASS CONVERSION TO ENGINEER'S PIPE LINE SPECIFICATIONS).
6. SYSTEMS AND COMPONENTS DOWNSTREAM AS ARE BEING DECLASSIFIED TO QUALITY RELATED AS CONTAINED BY QDP-4.
7. CHILLER SURGE TANK MUST BE THE HIGH POINT IN THE CHILLER CIRCUIT.
8. BRIDGE 3-WAY VALVE TO FACE WITH FLOW PURPOSELY DEMINERALIZER.
9. TEMPORARY STRAINER IS PLACED IN DRAIN PIECE DURING INITIAL FLUSHING OPERATIONS. STRAINER MUST BE REMOVED BEFORE PLANT START-UP.
10. DRAIN HEADER CONNECTED TO BE PROVIDED WITH BY FOR CONNECTING HOSE FOR DRAINING BY GRAVITY.
11. PROVIDE 4" NO 4" PIPE BETWEEN DEMINERALIZER AND DRAINER.
12. NPWT CONTACTS. VALVE TO LATER CLOSED. ANNUNC RESET TO BE PROVIDED.
13. LETDOWN REHEAT HX SIDE OF BLANKED OFF FLANGES NOT HYDRO TESTED. BLANKING PLATES MAY NOT BE REMOVED.

D-137

9	03/09/93		REVISED PER ECP-92-0050	TEW	LEC		
8	10/08/91	JMG	REVISED PER ECP-91-0044	LEC	JMG		
7	10/08/91	JMG	REVISED PER ECP-91-0044	LEC	JMG		
6	07/09/91	JMG	REVISED PER MP-91-0014 REV 0	MGR	JMG		
5	07/09/91	JMG	REVISED PER MP 2041	MGR	JMG		
NO.	DATE	BY	REVISION	CHK. BY	APPROVED		

NOTE: NUCLEAR SAFETY RELATED ACCORDING TO QUALITY GROUP D, SEISMIC CATEGORY I, QUALITY GROUP D, SEISMIC CATEGORY I AND ASME CODE APPROVAL

PLEX Drawing TR00160-002

FSAR Figure 9.3-16 SH. 4

SOUTH CAROLINA ELECTRIC & GAS COMPANY

VIRGIL C. SUMMER NUCLEAR STATION

DRAWING: SYSTEM FLOW DIAGRAM CHEMICAL AND VOLUME CONTROL

DRAWING LEGIBILITY CLASS 1

SCEG CAD DRAWING

DESIGN ENGINEERING

DRAWN BY	CHECKED BY	APPROVED BY	
ACI	MGR	JMG	

DRAWING NUMBER: E-302-676 REVISION: 9