## SYS. OPER. DATA

| # | AIR FLOW ACFM | AIR TEMP °F |
|---|---|---|
| 1 | 20,000 | 65-95 |
| 2 | 30,000 | 65-95 |
| 3 | 10,000 | 65-95 |
| 4 | 40,000 | 65-104 |
| 5 | 20,000 | 65-104 |
| 6 | 8,000 TO 40,000 | 65-104 |
| 7 | 32,000 TO 8 | 65-104 |
| 8 | 8,000 TO 40,000 | 19-95 |
| 9 | 40,000 | 55-95 |
| 10 | 2600 | 56 |
| 11 | 3600 | 56 |

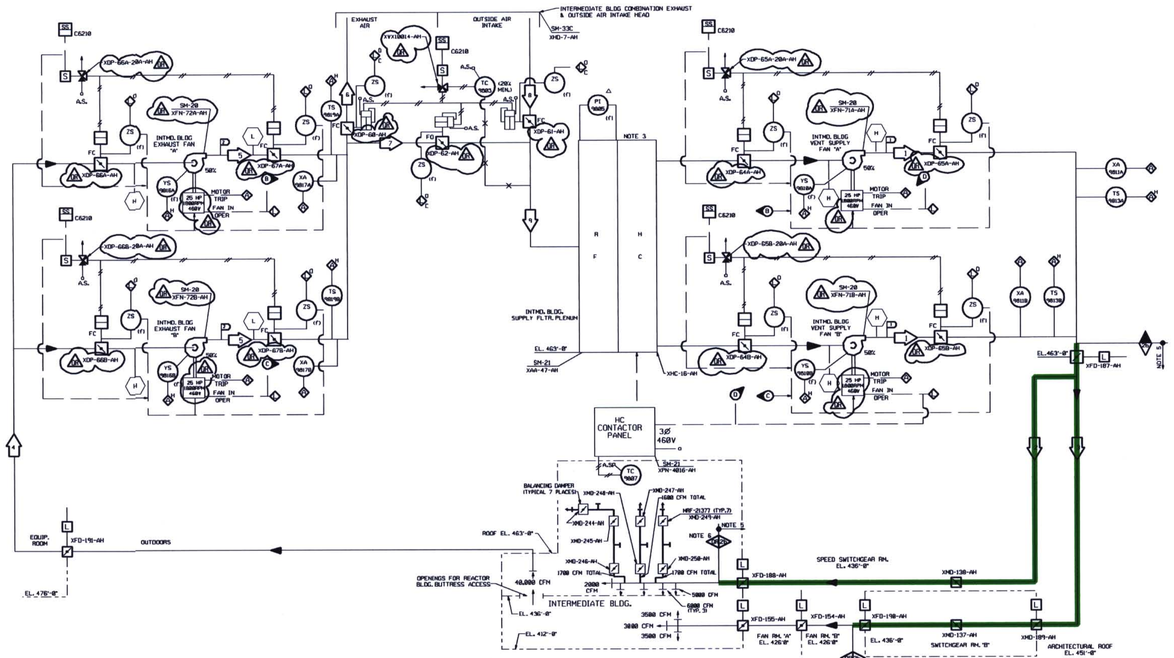


INTERMEDIATE BLDG. GENERAL VENTILATION SYSTEM

NON NUCLEAR SAFETY EXCEPT AS NOTED.

D-127

PLEX Drawing TR00160-007

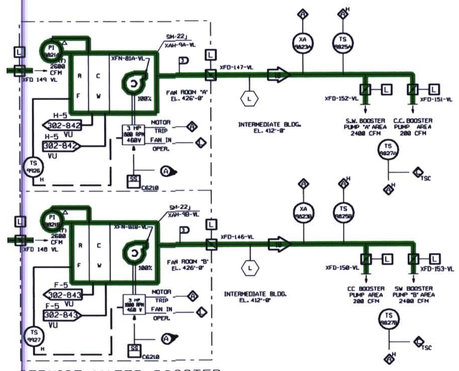


SERVICE WATER BOOSTER PUMP COOLING UNITS

SAFETY CLASS 2b

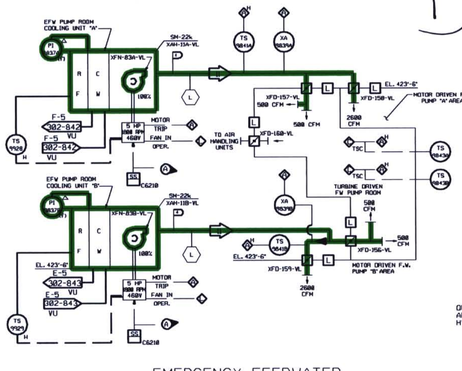


EMERGENCY FEEDWATER PUMP AREA COOLING UNITS

SAFETY CLASS 2b

NOTES:

1. EXCEPT WHERE OTHERWISE NOTED, ALL ALARMS & INDICATING LIGHTS ARE LOCATED AT THE HVAC CONTROL BOARD (XCP-6210-AH) IN THE MAIN CONTROL ROOM.
2. (F) INDICATES INSTRUMENT IS FURNISHED WITH EQUIPMENT.
3. HEATING COIL INCLUDES OVER-TEMP. & LOW FLOW PROTECTIVE DEVICES.
4. FOR SAFETY CLASSIFICATION OF INSTRUMENTATION, SEE THE INSTRUMENT LIST.
5. SPECIAL HIGH PRESSURE DUCT CONSTRUCTION SPEED SWITCH ROOM AREA EL. 436'-0" (XFD-187-AH, XFD-188-AH & XFD-190-AH ARE NON-NUCLEAR SAFETY ONLY DUCT IS SAFETY CLASS 2b)
6. ALL DUCTWORK IDENTIFIED AS OR TO BE PER QRP-4.
7. ALL EQUIPMENT IDENTIFIED AS OR TO BE PER TRP-31.

(A) UNIT STARTS WHEN ASSOCIATED PUMP STARTS. (4 PLCS)

QUALITY RELATED-FABRICATION, ERECTION AND INSPECTION PER SCE&G QRP FOR HVAC DUCTS AND SUPPORTS

DRAWING CLASS LEGEBILITY 1

| NO. | DATE | BY | REVISION | CHD. BY | LE APPROVAL |
|---|---|---|---|---|---|
| 15 | 04/27/93 | JMH | REVISED PER CGSS-930328 | DVW | GAA |
| 14 | 09/03/92 | CRR | REVISED PER MRF-21377 | SRM | D.J. |
| 13 | 07/29/92 | SRM | REVISED PER MRF-22010. | CRR | R.S. |

SOUTH CAROLINA ELECTRIC & GAS COMPANY

VIRGIL C. SUMMER NUCLEAR STATION

INTERMEDIATE BUILDING GENERAL VENTILATION AND PUMP AREA COOLING SYSTEMS

DESIGN ENGINEERING

V. C. SUMMER NUCLEAR STATION JENKINSVILLE, S.C.

| MADE | CHECKED | LE APPROVAL |
|---|---|---|
| SRM | CRR | R.S. |

DRAWING NUMBER: D-912-158 SHT NUMBER: 15 REV

## SYS. DESIGN DATA

| # | AIR FLOW ACFM | AIR TEMP °F |
|---|---|---|
| 4 | 3600 | 56 |
| 3 | 2600 | 56 |
| 2 | 20,000 | 65/104 |
| 1 | 20,000 | 65/95 |