SYSTEM OPER. DATA			
	AIR FLOW ACFM	AIR TEMP °F	
1	15700	54.6	
2	8350	54.6	
3	6300	55.6	

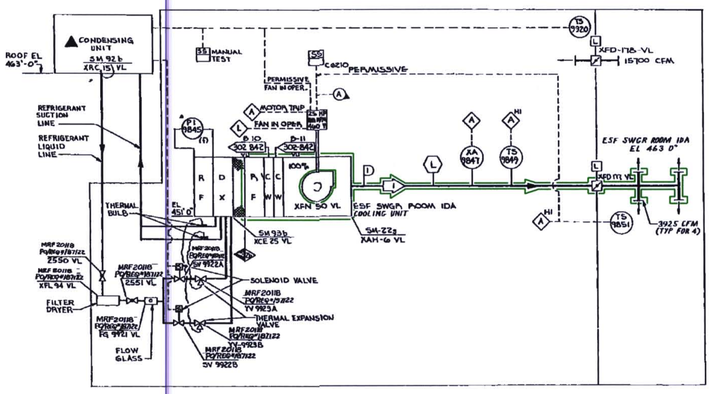

ESF SWGR ROOM IDA COOLING SYSTEM

SAFETY CLASS VERIFICATION
ORIGINATED BY [signature] 11/4/76
REVIEWED BY [signature] 11/4/76

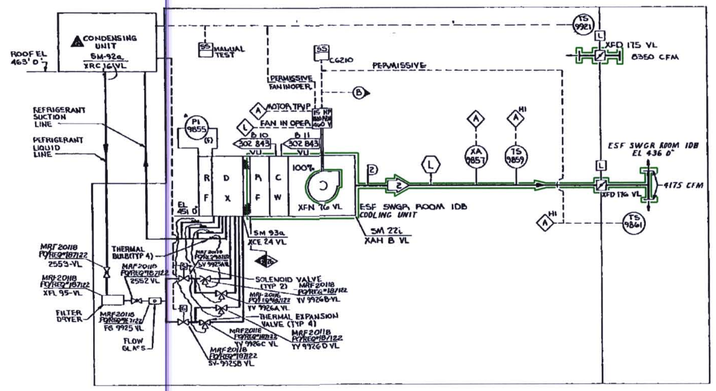

ESF SWGR ROOM IDB COOLING SYSTEM

3	6300	55.6	
2	8350	54.6	
1	15700	54.6	
	AIR FLOW ACFM	AIR TEMP °F	
	SYSTEM DESIGN DATA		

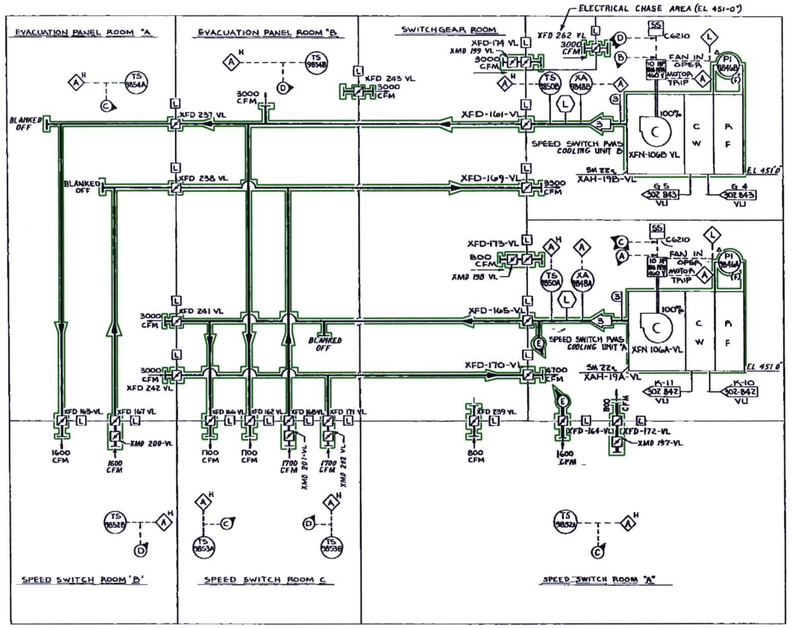

SPEED SWITCH ROOM COOLING SYSTEM

(A) ESF LOADING SEQUENCE SIGNAL CHANNEL "A" START SIGNAL

(B) ESF LOADING SEQUENCE SIGNAL CHANNEL B START SIGNAL

ALL SYSTEM COMPONENTS ARE SAFETY CLASS 2b

NOTES
1 EXCEPT WHERE NOTED OTHERWISE ALL ALARMS and INDICATING LIGHTS ARE LOCATED AT THE HVAC CONTROL BOARD (XCP 6210-AH) IN THE MAIN CONTROL ROOM
2 (I) INDICATES INSTR. IS FURNISHED WITH EQUIPMENT
3 FOR SAFETY CLASSIFICATION OF INSTRUMENTATION SEE THE INSTR. LIST

D-126

DRAWING LEGIBILITY CLASS 1
SCE&G CAD ENHANCED

PLEX Drawing TR00160-007

SOUTH CAROLINA ELECTRIC & GAS COMPANY
VIRGIL C. SUMMER NUCLEAR STATION
BUILDING SERVICE SYSTEM FLOW DIAGRAM
INTERMEDIATE BUILDING ESF SWGR
ROOMS AND SPEED SWITCH ROOMS COOLING SYSTEMS
DESIGN ENGINEERING
V. C. SUMMER NUCLEAR STATION JENKINSVILLE, S. C.

NO.	DATE	BY	REVISION	CKD. BY	APPROVAL
11	11/30/87	PS	REV.PER MRF-2011B, MCN-U	PJS	PJS

SIZE	DESIGNED	DRAWN	APPROVAL
PS	PJS	PJS	

SCALE NO. 1 | DRAWING NUMBER D-912-157 | SHT. NUMBER 11 | REV.