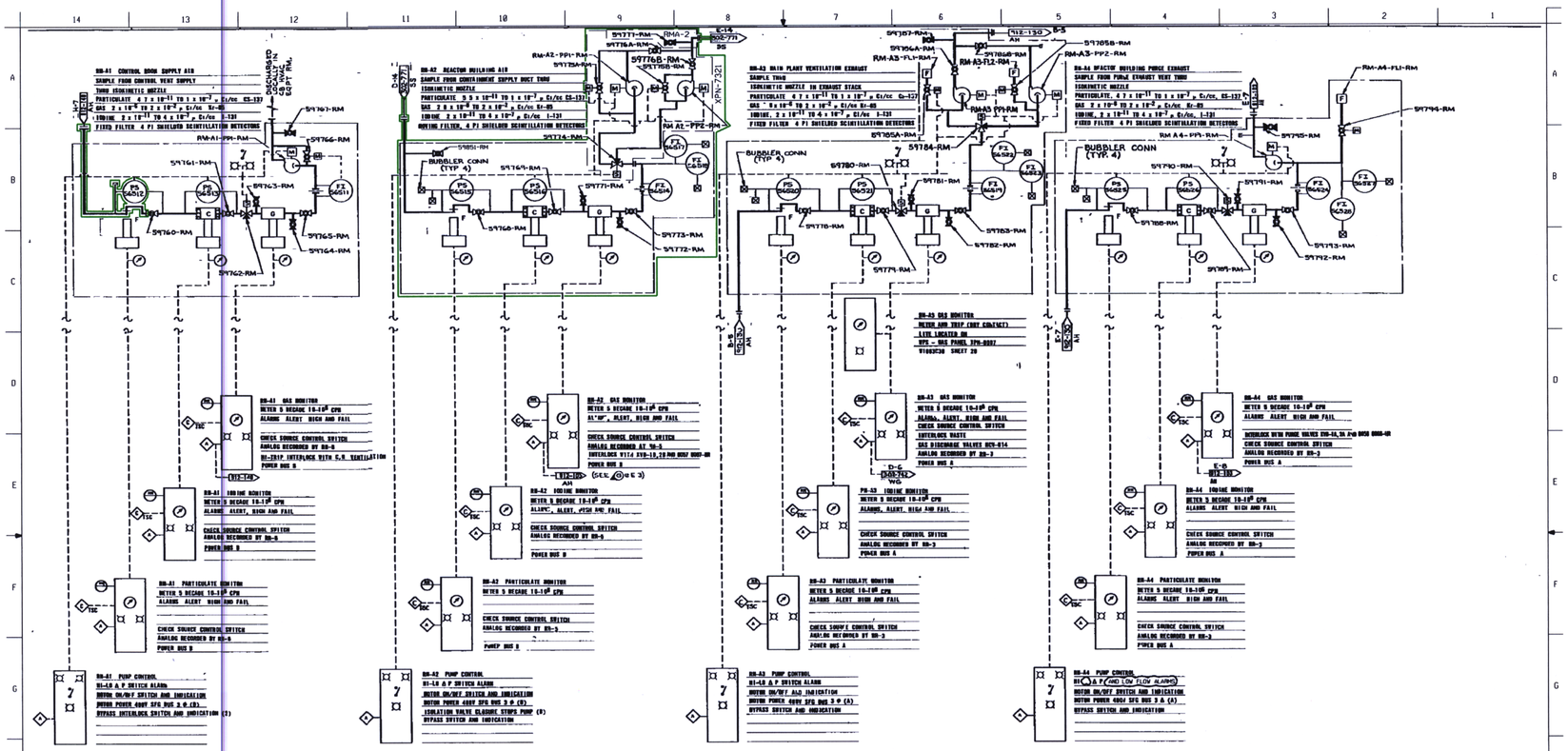

D-107

NOTES

1 ALL DETECTORS ARE SCINTILLATION TYPE UTILIZING 4 PI SHIELDING (EXCEPT RM-A4, RM-A12 AND RM-A14)
2 CALIBRATION DATA IS REQUIRED FOR EACH DETECTOR AND READOUT
3 ALL DATEMETER INDICATORS ARE 5 DECADE 10 TO 10^5 CPM EXCEPT RM-A13 (8 DECADE) AND RM-A14 (6 DECADE)
4 LOCAL METER READOUT AND ALARM INDICATION IS PROVIDED FOR ALL CHANNELS LOCAL METER IS 5 DECADE ANALOG EXCEPT RM-A13 AND RA-A14
5 RECORDERS ON TYPE RADIATION MONITORING PANEL IN THE CONTROL ROOM ARE MULTI-POINT STRIP CHART ILLUMINATED RECORDERS WITH A FULL SCALE RESPONSE OF AT LEAST 2 SECONDS.
6. EACH CHANNEL PROVIDES ADJUSTABLE TRIP SETPOINT FOR ALERT ALARM, AND HIGH ALARM AND ALSO HAS A FAIL ALARM FOR LOSS OF SIGNAL AND ON LOSS OF POWER.
7. EACH CHANNEL UTILIZES AN ISOTOPE CHECK SOURCE WITH REMOTE OPERATION CONTROL SWITCH LOCATED ON RADIATION MONITORING PANEL IN CONTROL ROOM, EXCEPT FOR RM-A7, RM-A8, AND RM-A12 WHICH HAVE LOCAL CONTROL.
8. ALL PUMPING STATIONS INCLUDE PUMPING TIME METER WITH RESET. FLOW DEMONSTRATED ON ALL PUMPING STATIONS. PUMP INPUTS HAVE PROTECTIVE FILTERS.
9. ANNUNCIATOR PANEL: RM RADIATION MONITORING PANEL INDICATES ALERT, HIGH, FAIL - BYPASS - LO-FLOW OR A P ALARMS, INCLUDES AUDIBLE ALARM, RESET AND ACKNOWLEDGE.
10. RM-A8 AND RM-A9 CHANNELS USE LOCAL VISUAL AND AUDIBLE ALARM.
11. DETAILS ARE IN SPECIFICATION SP-815-844401-000.
12. RM-A7 IS SEISMIC CATEGORY 1.
13. ALL FIXED CHANNELS PROVIDE OUTPUT TO COMPUTER.
14. ALL SCINTILLATION CHANNELS PROVIDE PULSE OUTPUT FOR SELECTED USE BY ANALYZER AT SAMPLER
15. RM-A2 AND RM-A3 HAVE REDUNDANT BACKUP PUMP WITH LOCAL TRANSFER SWITCH FOR POWER.
16. PANEL LAYOUT, SEE VENDOR DWG. 1N6-814-02-1.

PLEX Drawing TR00160-007
PLEX Drawing TR00160-002

DRAWING LEGIBILITY CLASS 3
SCE&G CAD ENHANCED

SOUTH CAROLINA ELECTRIC & GAS COMPANY
VIRGIL C. SUMMER NUCLEAR STATION

RADIATION MONITORING SYSTEM DIAGRAM
ATMOSPHERIC

DESIGN ENGINEERING
S.C. SUMMER NUCLEAR STATION (CONSTRUCTION)
DESIGN ACI | CHECKED MGR | APPROVAL JMG

NO	DATE	BY	REVISION	ORIG. BY	APPROVAL
7	10-31-94	SRM	REVISED PER NCN-4970	MGR	RB
6	11-9	ACI	REVISED PER MRF-21577	MGR	JMG

DRAWING NUMBER D-806-001 SHT. NUMBER 7 REV. 7