SYSTEM DATA							
	NORMAL		UPSET		°F	BY	REMARKS
	GPM	PSIG	GPM	PSIG			
1	52	90	----	----	45	JAH	
2	53	93	----	----	45	JAH	
3	78	95	----	----	45	JAH	
4	58	184	----	----	45	JAH	
5	58	188	----	----	45	JAH	
6			----	----	45	JAH	
7	65	83	----	----	45	JAH	
8	535	77	----	----	45	JAH	
9	53	76	----	----	45	JAH	
10	79	89	----	----	45	JAH	
11			----	----	45	JAH	
12			----	----	45	JAH	
13	14	188	----	----	45	JAH	

SAFETY CLASS VERIFICATION

ORIGINATED BY [illegible] 8/8/77

REVIEWED BY [illegible] 8/8/77

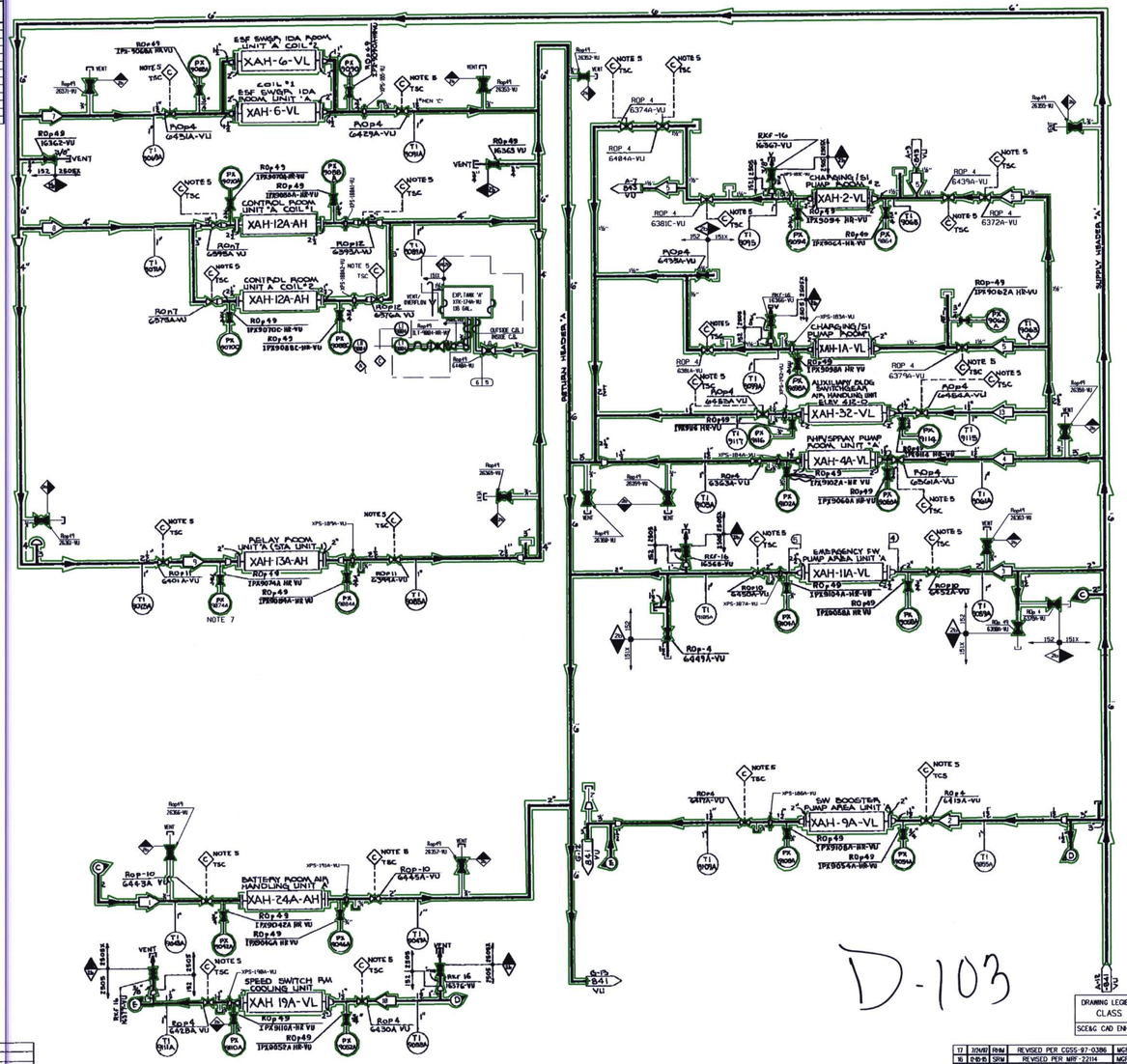

NOTES:

1. ALL EQUIPMENT SAFETY CLASS 2b, UNLESS NOTED OTHERWISE.
2. ALL SAFETY CLASS PIPING TO BE IN ACCORDANCE WITH LINE SPEC. 1B2A.
3. ALL NON SAFETY CLASS PIPING TO BE IN ACCORDANCE WITH LINE SPEC 1B1X.
4. ALL ALARMS & INDICATION LIGHTS ARE LOCATED ON THE HVAC CONTROL BOARD(DCP 6210-1) IN THE MAIN CONTROL ROOM, EXCEPT WHERE NOTED OTHERWISE.
5. OPERATOR INITIATED INPUT TO THE TSC COMPUTER.
6. THE HYDROSTATIC PRESSURE LISTED ON THIS DRAWING IN THE DESIGN DATA BOX IS PER SECTION XI OF THE ASME CODE. THE VALUE IS BASED ON DEAD HEAD PRESSURE AT THE PUMP DISCHARGE. THE VALUE DOES NOT INCLUDE ELEVATION CORRECTIONS.
7. CONNECTION CONTAINS PERMANENT SAMPLE CONNECTION. REFER TO IMS-22-1619 FOR DETAILS.

PLEX Drawing TR00160-003

D-103

6	ATM	187	—	—	—	5	
5	123	54	—	—	—	136	DJL
4	123	45	—	—	—	136	DJL

DESIGN DATA									
NO.	DESIGN PRESSURE NORMAL		DESIGN PRESSURE UPSET		DESIGN TEMPERATURE	RQP2 BY	CVD	REMARKS	
	PSIG	IN. H2O	PSIG	IN. H2O	°F				
6	ATM	187	—	—	—	5			
5	123	54	—	—	—	136	DJL	336 IN (TYP)	
4	123	45	—	—	—	136	DJL	336 OUT (TYP)	

1/4"=1'-0" 0" 5' 10' 15' 20'

NO.	DATE	BY	REVISION	CKD. BY	APPROVAL
17	10/4/97	RHM	REVISED PER CDSS-97-0386	MGR	GJM
16	12-15-95	SRM	REVISED PER MRF-22114	MGR	D.L.
15	10-3-95	SRM	REVISED PER MRF-22594 & MRF-22114	MGR	CHR
14	8-9-93	AVN	REVISED PER MRF-34096 &	MGR	D.L.
			REVISED PER MRF-34054	MGR	DJC

DRAWING LEGIBILITY CLASS 1

SCE&G CAD ENHANCED

NUCLEAR SAFETY RELATED
NOTE: DO NOT SCALE THIS DRAWING
DOCUMENTATION AND WRITTEN APPROVAL

FSAR Figure 9.4-23

SOUTH CAROLINA ELECTRIC & GAS COMPANY

VIRGIL C. SUMMER NUCLEAR STATION

PIPING — SYSTEM FLOW DIAGRAM

CHILLED WATER - TO COOLING COILS

"A"

DESIGN ENGINEERING

V. C. SUMMER NUCLEAR STATION JENKINSVILLE, S.C.

DRAWN BY	CHECKED	LEAD APPROVAL
CRR	RHM	DJC

DRAWING NUMBER: D-302-842 — SHT. NUMBER: 17 — REV.: 17