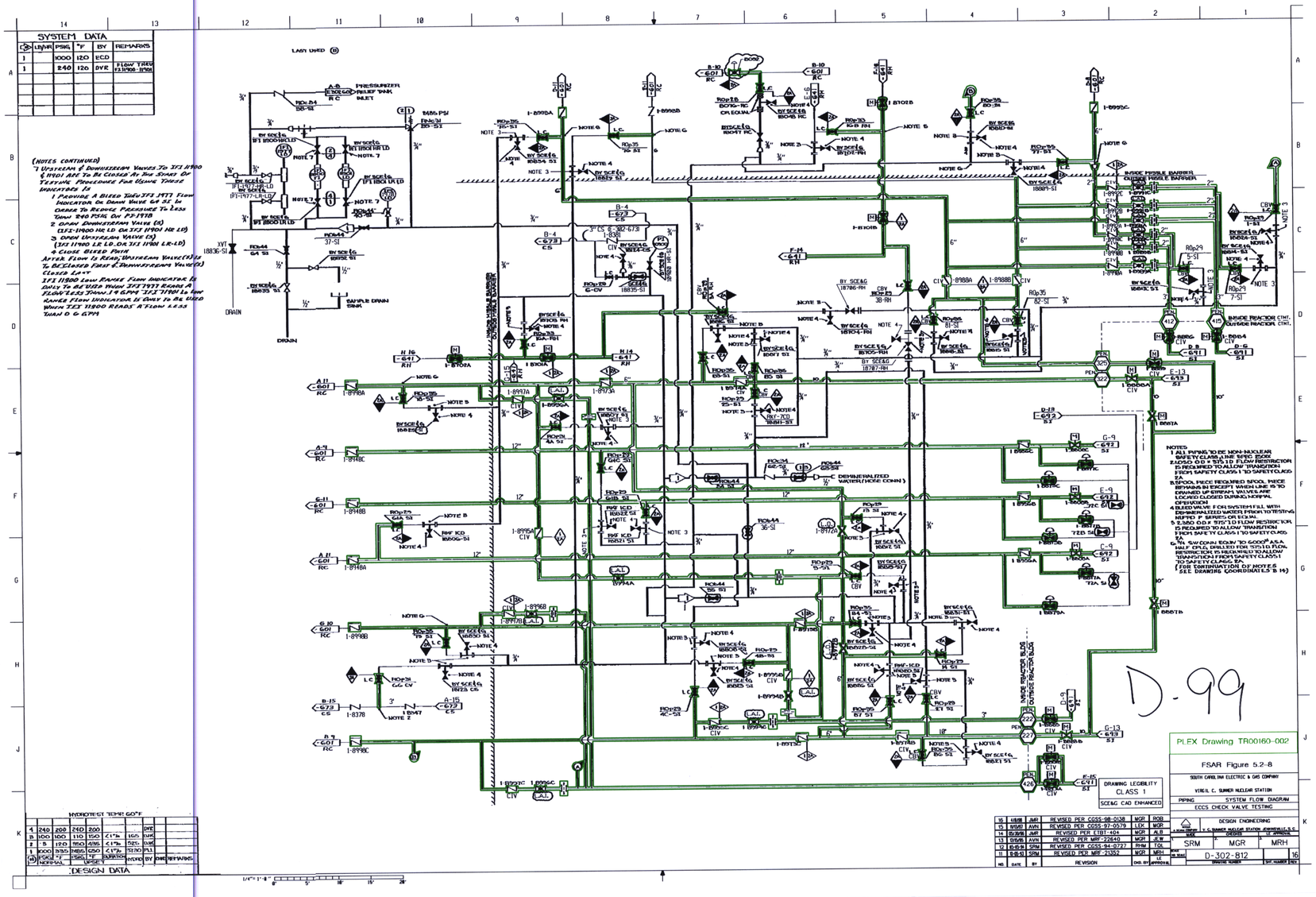
SYSTEM DATA
(NOTES CONTINUED)
7 UPSTREAM & DOWNSTREAM VALVES TO IFI 11900 & 11901 ARE TO BE CLOSED AT THE START OF TESTING PROCEDURE FOR USING THESE INDICATORS IS
1 PROVIDE A BLEED THRU IFI 1977 FLOW INDICATOR OR DRAIN VALVE 64 SI IN ORDER TO REDUCE PRESSURE TO LESS THAN 240 PSIG ON PI-1978
2 OPEN DOWNSTREAM VALVE (S) (IFI-11900 HR LD OR IFI 11901 HR LD)
3 OPEN UPSTREAM VALVE (S) (IFI 11900 LR LD OR IFI 11901 LR-LD)
4 CLOSE BLEED PATH
AFTER FLOW IS READ, UPSTREAM VALVE(S) IS TO BE CLOSED FIRST & DOWNSTREAM VALVE(S) CLOSED LAST
IFI 11900 LOW RANGE FLOW INDICATOR IS ONLY TO BE USED WHEN IFI 1977 READS A FLOW LESS THAN 1.9 GPM IFI 11901 LO LOW RANGE FLOW INDICATOR IS ONLY TO BE USED WHEN IFI 11900 READS A FLOW LESS THAN 0.6 GPM
NOTES
1 ALL PIPING TO BE NON-NUCLEAR SAFETY CLASS, LINE SPEC 2502
2 LOSO OD X 375 ID FLOW RESTRICTOR IS REQUIRED TO ALLOW TRANSITION FROM SAFETY CLASS 1 TO SAFETY CLASS 2A
3 SPOOL PIECE REQUIRED SPOOL PIECE BEHAVES IN EXCEPT WHEN LINE IS TO DRAINED UP STREAM VALVES ARE LOCKED CLOSED DURING NORMAL OPERATION
4 BLEED VALVE FOR SYSTEM FILL WITH DEMINERALIZED WATER PRIOR TO TESTING NUPTO P SERIES OR EQUIV.
5 2.380 OD X 375 ID FLOW RESTRICTOR IS REQUIRED TO ALLOW TRANSITION FROM SAFETY CLASS 1 TO SAFETY CLASS 2A
6 3/4 SW CONN EQUIV TO 6000# A.S.A. HALF CPLG DRILLED FOR 375 ID FLOW RESTRICTOR IS REQUIRED TO ALLOW TRANSITION FROM SAFETY CLASS 1 TO SAFETY CLASS 2A
(FOR CONTINUATION OF NOTES SEE DRAWING COORDINATES B 14)
HYDROTEST TEMP 60°F
DESIGN DATA
D-99
PLEX Drawing TR00160-002
FSAR Figure 5.2-8
SOUTH CAROLINA ELECTRIC & GAS COMPANY
VIRGIL C. SUMMER NUCLEAR STATION
PIPING
SYSTEM FLOW DIAGRAM
ECCS CHECK VALVE TESTING
DRAWING LEGIBILITY CLASS 1
SCE&G CAD ENHANCED
DESIGN ENGINEERING
SRM
MGR
MRH
D-302-812
16
REVISED PER CGSS-98-0138
REVISED PER CGSS-97-0579
REVISED PER ETBT-404
REVISED PER MRF-22640
REVISED PER CGSS-94-0727
REVISED PER MRF-21352
REVISION