SYSTEM DATA					
#	GPM	PSIG	°F	BY	REMARKS
1	0.5	600	80	DTK	NORMAL
2	0.5	2235	80	DTK	NORMAL
3	0.5	2235	80	DTK	NORMAL
4	1.0	2235	80	DTK	NORMAL
5	1.2	2235	80	DTK	POST ACCIDENT
6	1.5	600	80	DTK	FLUSH
7	1.5	500	80	DTK	—
8	1.0	110	80	DTK	FLUSH & DILUTION
9	24	39	50	JDM	
10	24	39	60	JDM	

SAFETY CLASS VERIFICATION	
ORIGINATED BY	[signature]
REVIEWED BY	[signature]

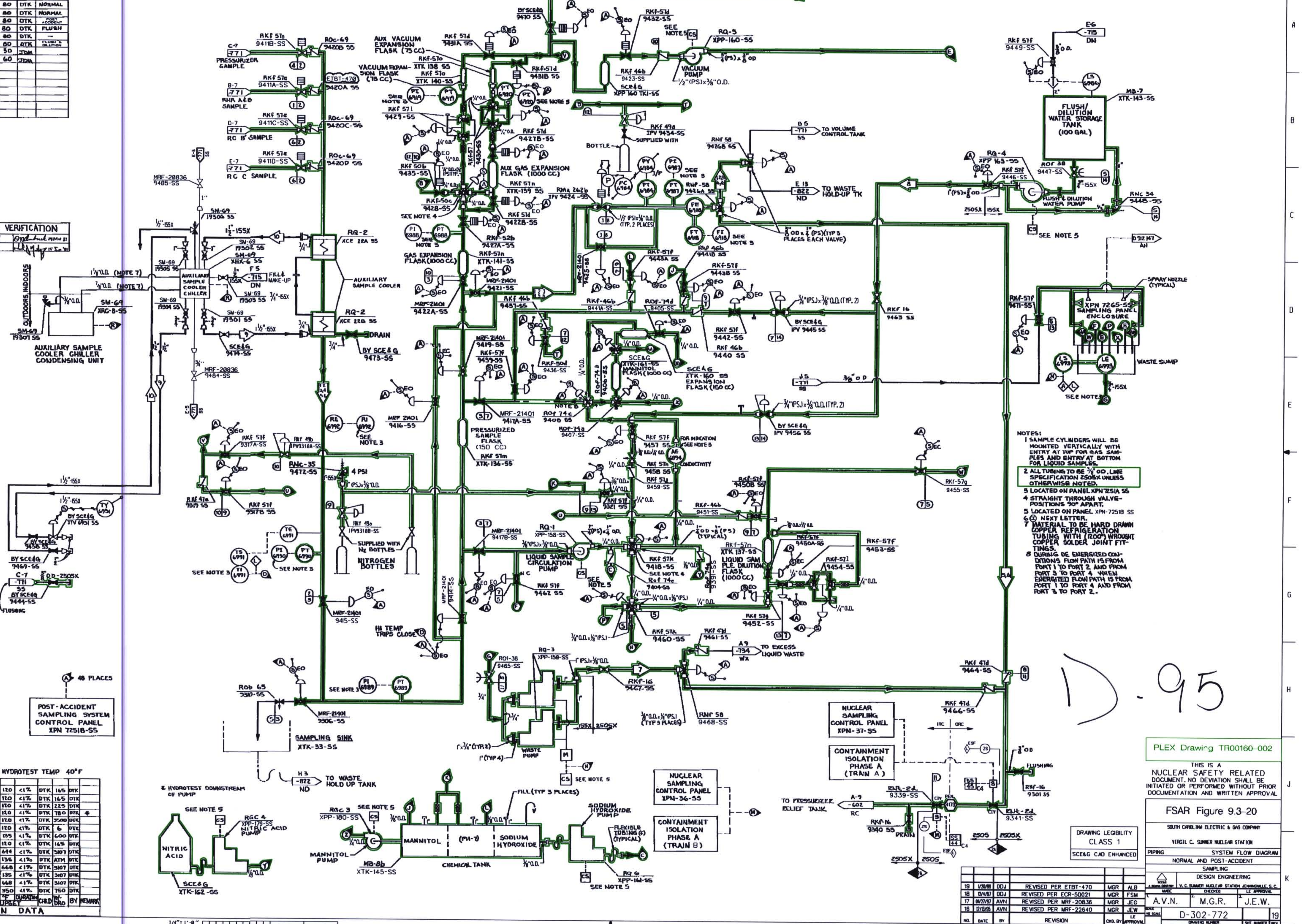

NOTES:

1. SAMPLE CYLINDERS WILL BE MOUNTED VERTICALLY WITH ENTRY AT TOP FOR GAS SAMPLES AND ENTRY AT BOTTOM FOR LIQUID SAMPLES.
2. ALL TUBING TO BE 3/8" OD. LINE SPECIFICATION 2505X UNLESS OTHERWISE NOTED.
3. LOCATED ON PANEL XPN 7251A SS
4. STRAIGHT THROUGH VALVE-POSITIONS 90° APART.
5. LOCATED ON PANEL XPN-7251B SS
6. ⊗ NEXT LETTER.
7. MATERIAL TO BE HARD DRAWN COPPER REFRIGERATION TUBING WITH (1200°) WROUGHT COPPER SOLDER JOINT FITTINGS.
8. DURING DE ENERGIZED CONDITIONS FLOW PATH IS FROM PORT 1 TO PORT 2 AND FROM PORT 3 TO PORT 4. WHEN ENERGIZED FLOW PATH IS FROM PORT 1 TO PORT 4 AND FROM PORT 3 TO PORT 2.

NOTE MINIMUM HYDROTEST TEMP 40°F

#	NORMAL PSIG	NORMAL °F	UPSET PSIG	UPSET °F	DURATION	CHKD	HYDRO	BY	REMARK
14	110	120	110	120	<1%	DTK	165	DTK	
13	50	120	110	120	<1%	DTK	165	DTK	
12	2	120	150	120	<1%	DTK	225	DTK	
11	500	120	625	120	<1%	DTK	780	DTK	*
10	75	120	2000	120	<1%	DTK	3500	DTK	
9	2	120	4	120	<1%	DTK	6	DTK	
8	600	135	900	135	<1%	DTK	600	DTK	
7	5	120	110	120	<1%	DTK	165	DTK	
6	2235	135	2485	644	<1%	DTK	3107	DTK	
5	ATM	135	2	136	<1%	DTK	ATM	DTK	
4	2235	135	2485	668	<1%	DTK	3107	DTK	
3	2235	135	2485	135	<1%	DTK	3107	DTK	
2	2235	135	2485	668	<1%	DTK	3107	DTK	
1	595	350	600	350	<1%	DTK	750	DTK	

DESIGN DATA

1/4" = 1'-0" 0' 5' 10' 15' 20'

D-95

PLEX Drawing TR00160-002

THIS IS A NUCLEAR SAFETY RELATED DOCUMENT. NO DEVIATION SHALL BE INITIATED OR PERFORMED WITHOUT PRIOR DOCUMENTATION AND WRITTEN APPROVAL

DRAWING LEGIBILITY CLASS 1
SCE&G CAD ENHANCED

NO.	DATE	BY	REVISION	CKD. BY	LE APPROVAL
19	1/20/99	DDJ	REVISED PER ETBT-470	MGR	ALB
18	12/4/97	DDJ	REVISED PER ECR-50021	MGR	FSM
17	01/27/97	AVN	REVISED PER MRF-20836	MGR	JEG
16	12/13/95	AVN	REVISED PER MRF-22640	MGR	JEW

FSAR Figure 9.3-20

SOUTH CAROLINA ELECTRIC & GAS COMPANY
VIRGIL C. SUMMER NUCLEAR STATION
PIPING — SYSTEM FLOW DIAGRAM
NORMAL AND POST-ACCIDENT
SAMPLING
DESIGN ENGINEERING
V. C. SUMMER NUCLEAR STATION JENKINSVILLE, S. C.

MADE	CHECKED	LE APPROVAL
A.V.N.	M.G.R.	J.E.W.

SCALE: NO SCALE
DRAWING NUMBER: D-302-772
REV: 19
302772.0001