SYSTEM DATA

	GPM	PSIG	°F	BY	REMARKS
1	4900	26	120	KAC	
2	2650	31	120	KAC	
3	2500	44	120	KAC	INJECTION
	2500	44	196	KAC	RECIRC.
4	2500	230	120	KAC	INJECTION
	2500	230	196	KAC	RECIRC.
5	1214	97	120	KAC	INJECTION
	1214	97	196	KAC	RECIRC.
6	76	97	120	KAC	INJECTION
	76	97	196	KAC	RECIRC.
7	2500	26	196	KAC	
8	90	27	105	KAC	*
9	65	31	105	KAC	**
10	2500	50	120	KAC	
11	100	7	100		
12	100	42	100		
13	50	75	100		
14	0441	50	100		

*MAXIMUM FLOW WITH BOTH PUMPS OPERATING
** MAXIMUM FLOW WITH ONE PUMP OPERATING

NOTES:
1. FOR PUMP CASING DRAINS FOR BOTH PUMPS, SEE DETAIL "A".
2. SPECTACLE ORIFICE PLATES FOR TESTING ISOLATION CHECK VALVES.
4. RECORDER SHARED WITH SERVICE WATER FLOW INSTRUMENTATION FOR R.B. COOLING UNIT FLOW.
5. THE FLANGE HAS BEEN DRILLED AND TAPPED TO ACCEPT A ¾" COMPRESSION FITTING TO FACILITATE LLRT WORK. THE FITTING SHOULD BE CAPPED AT OTHER TIMES.

(2 PLACES) A — CONTAINMENT SPRAY ACTUATION TRAIN "A" REF. IMS-41-011-8 (W DWG 108 D 897 SH.8)

(2 PLACES) B — CONTAINMENT SPRAY ACTUATION TRAIN "B" REF. IMS-41-011-8 (W DWG 108 D 897 SH.8)

(2 PLACES) C — ALARM REPEAT INTERLOCKED WITH PUMP BREAKER CIRCUIT.

(4 PLACES) D — PHASE "A" CONTAINMENT ISOLATION SIGNAL. (OPEN VALVES)

SAFETY CLASS VERIFICATION
ORIGINATED BY
REVIEWED BY

NOTE:
A. TEMPORARY STRAINER FOR SYS. CLEAN UP TO BE REMOVED AFTER FINAL FLUSH.

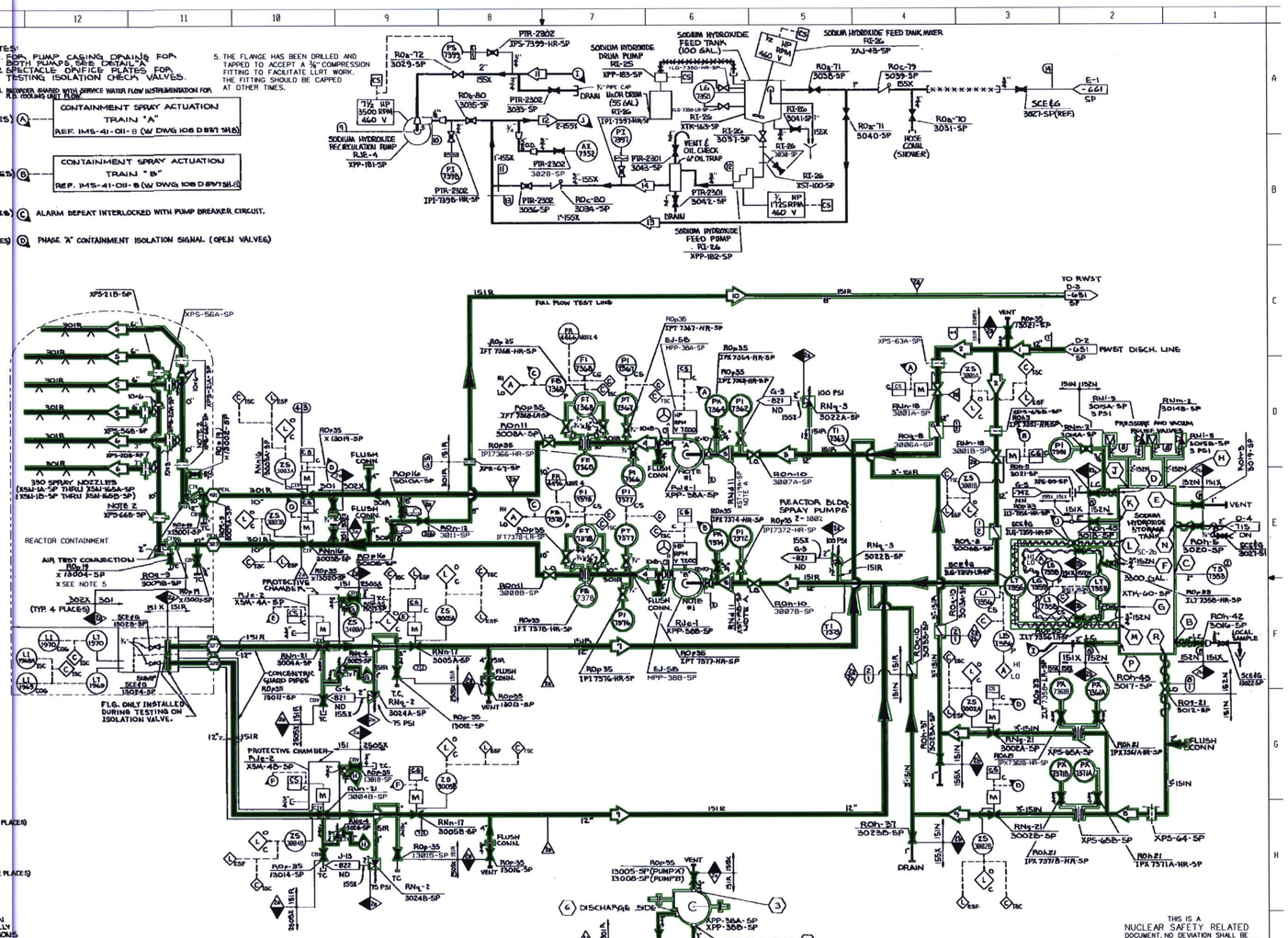

RECIRCULATION SUMP AUTO SWITCHOVER LOGIC "TRAIN A" — E (2 PLACES)

RECIRCULATION SUMP AUTO SWITCHOVER LOGIC "TRAIN B" — F (2 PLACES)

NOTE:
WHEN APPLICABLE, THE NORMAL DESIGN PRESSURES & TEMPERATURES (ESPECIALLY TEMPERATURES) ARE THE WORST CONDITIONS THAT EXIST DURING INJECTION PHASE OF SAFETY INJECTION. THE UPSET CONDITIONS ARE THE WORST CONDITIONS FOR RECIRCULATION.

DESIGN DATA

	P NORMAL	T NORMAL	P EMERGENCY 1	T EMERGENCY 1	P UPSET	T UPSET	DESIGN P	DESIGN T	REMARKS
14	100	100	110	150			165		
13	100	100	110	150			165		
12	125 **	100	150	100			225		CONTINUATION SUMP TEMP. ALSO FOR SUMP 11 & 13
11	125 **	100	150	100			225		
10	35	120	45	120			67.5		
9	7	120	3	120					
8	3.8	120	3.8	120			4.8	FLL	P AND TEMP. FOR SUMP 9 & 10
7	ATM	120	70	250			88	DYN	
6	225	120	45	120			282	DYN	
5	45	120	45	120			81	ECD	
4	ATM	120	145	150			207	DYN	
3	225	120	245	250			307	ECD	
2	45	120	80	250			100	ECD	
1	30	120	30	120			44	ECD	

NOTE:
FLAG 6 "NORMAL" REPRESENTS THE DESIGN "IN SERVICE" PRESSURE. EMERGENCY 1 FOR THIS FLAG REPRESENTS AN ISOLATED CONDITION FROM PUMP DISCHARGE PRESSURE.

NOTE:
HYDROTEST TEMP. TO BE AT OR ABOVE 60°F FOR CARBON STEEL SUBSYSTEM, AND AT OR ABOVE 40°F FOR STAINLESS STEEL SUBSYSTEMS. HYDROSTATIC TESTING OF RING HEADERS & NOZZLES TO BE ACCOMPLISHED PER CODE N-58, PAR. 1614

1/4" = 1'-0"

D-92

THIS IS A NUCLEAR SAFETY RELATED DOCUMENT. NO DEVIATION SHALL BE INITIATED OR PERFORMED WITHOUT PRIOR DOCUMENTATION AND WRITTEN APPROVAL

PLEX Drawing TR00160-002

FSAR Figure 6.2-46

SOUTH CAROLINA ELECTRIC & GAS COMPANY
VIRGIL C. SUMMER NUCLEAR STATION
PIPING — SYSTEM FLOW DIAGRAM
REACTOR BUILDING SPRAY SYSTEM

DESIGN ENGINEERING
V.C. SUMMER NUCLEAR STATION JENKINSVILLE, S.C.

DRAWN	CHECKED	LEAD ENGINEER
DDJ	MGR	GAL

D-302-661 — 31

DRAWING LEGIBILITY CLASS 1
SCE&G CAD ENHANCED

NO.	DATE	BY	REVISION	CHG. BY	LEAD ENGINEER APPROVAL
30	01/07	FRM	REVISED PER CGSS-97-0636	MGR	WTW
29	7/30/97	FRM	REVISED PER CGSS-97-0389	MGR	WWD
28	01/09/96	AWM	REVISED PER MRF-22640	MGR	JEW
27	12/21/91	JMH	REVISED AS PER NCN-4903	MGR	GVM
26	8-01-91	SRM	REVISED PER MRF-21475	MGR	RLJ
31	5/29/91	JMF	REVISED PER CGSS-89-0261	SHM	TOC

DRAWING NUMBER — DRAWING TYPE — SHEET NUMBER — REV. NUMBER

=====SYTIME=====
DGN=SPEC=====