SYSTEM DATA					
ID	BASE GPM	P SIG	°F	BY	REMARKS
1	40	100	120	N/C	
2	15	90	195	N/C	
3	5	90	140	N/C	
4	40	85	155	N/C	
5	75	100	120	EBT	
6	75	95	125	EBT	
7	55	100	120	EBT	
8	55	50	126	EBT	

* THIS TEMPERATURE IS A MAXIMUM EXPECTED FOR 95 DEG. SERVICE WATER TEMPERATURE & LOSS OF ONE COMPONENT COOLING WATER HEAT EXCHANGER DURING COOLDOWN MODE.

SAFETY CLASS VERIFICATION
ORIGINATED BY
REVIEWED BY

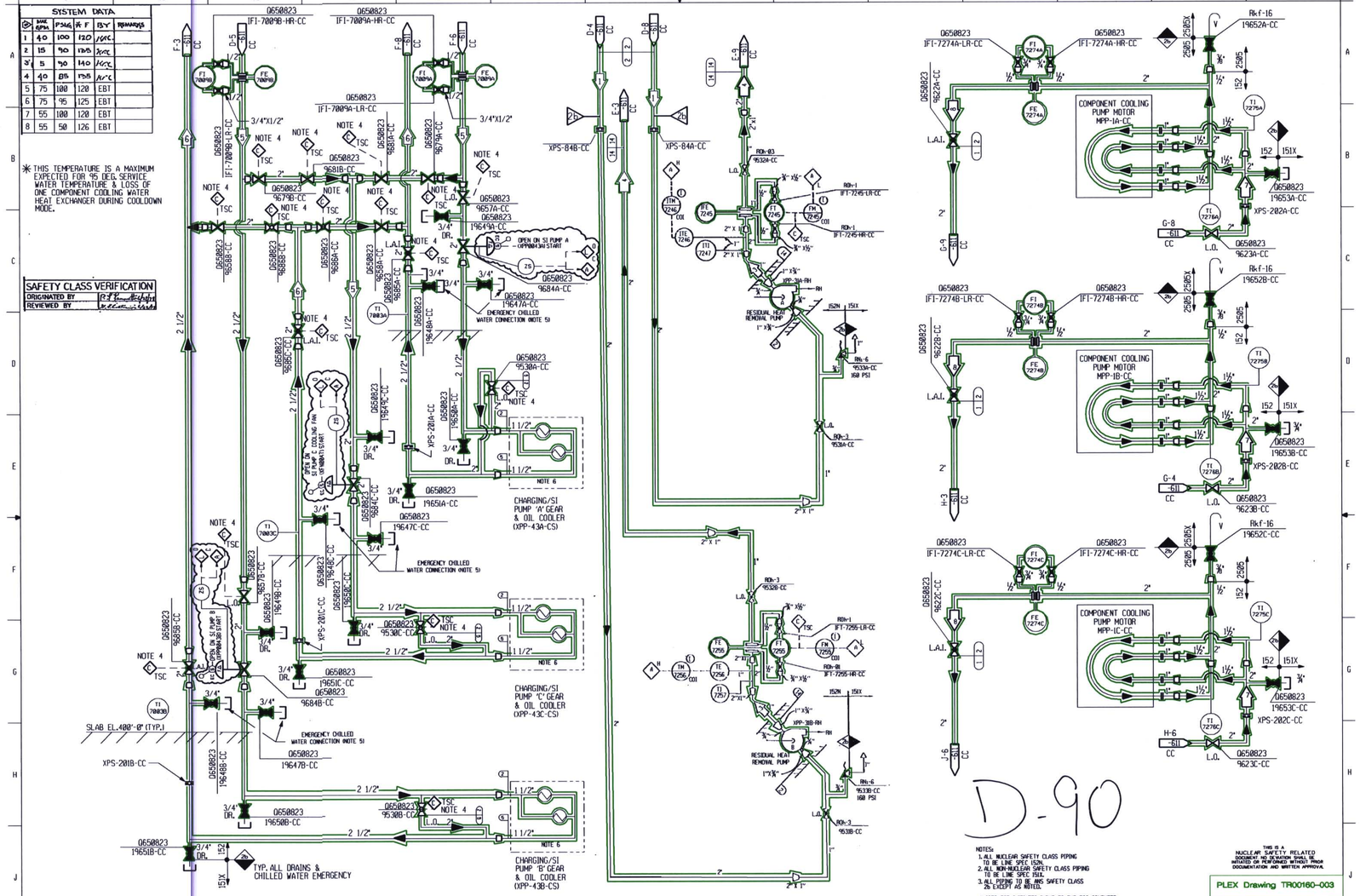

HYDRO TEMP COLD WATER											
5	120	160	150	180	2 HR.	190	EBT				
14	120	160	150	180	2hr	150	DTK				
2	120	160	150	180	2hr	190	DTK				
1	30	160	30	180	2hr	40	EBT				
ID	PSIG NORMAL	°F NORMAL	PSIG UPSET	°F UPSET	DURATION	HYDRO	BY	CHK	REMARKS		

DESIGN DATA

1/4" = 1'-0"

NOTES:
1. ALL NUCLEAR SAFETY CLASS PIPING TO BE LINE SPEC 152N.
2. ALL NON-NUCLEAR SAFETY CLASS PIPING TO BE LINE SPEC 151X.
3. ALL PIPING TO BE ANSI SAFETY CLASS 2b EXCEPT AS NOTED.
4. OPERATOR INITIATED INPUT TO THE TSC COMPUTER.
5. FOR CHARGING PUMP COOLING AFTER LOSS OF CCW.
6. SEE IMS-12-004-2 FOR PIPING ON CHARGING PUMP SKID.

THIS IS A NUCLEAR SAFETY RELATED DOCUMENT NO DEVIATION SHALL BE MADE OR CONFORMED WITHOUT PROPER DOCUMENTATION AND WRITTEN APPROVAL.

DRAWING LEGIBILITY CLASS 1
SCE&G CAD ENHANCED

NO.	DATE	BY	REVISION	CHK. BY	LE APPROVAL
13	6/8/98	DDJ	REVISED PER MRF-22594	MGR	CHR
12	05/05/98	JMP	REVISED PER CCSS-98-0261	RBM	TOC
11	03-3-95	SRM	REVISED PER MRF-22594	MGR	CHR
10	9/15/81	SRM	REVISED PER MRF-21475	MGR	RLJ

PLEX Drawing TR00160-003

FSAR Figure 9.2-7

SOUTH CAROLINA ELECTRIC & GAS COMPANY

VIRGIL C. SUMMER NUCLEAR STATION

PIPING SYSTEM FLOW DIAGRAM

COMPONENT COOLING SYSTEM TO NSSS PUMPS

DESIGN ENGINEERING
V. C. SUMMER NUCLEAR STATION JENKINSVILLE, S.C.

DRAWN	CHECKED	LE APPROVAL
SRM	MGR	RLJ

D-302-614 — 13