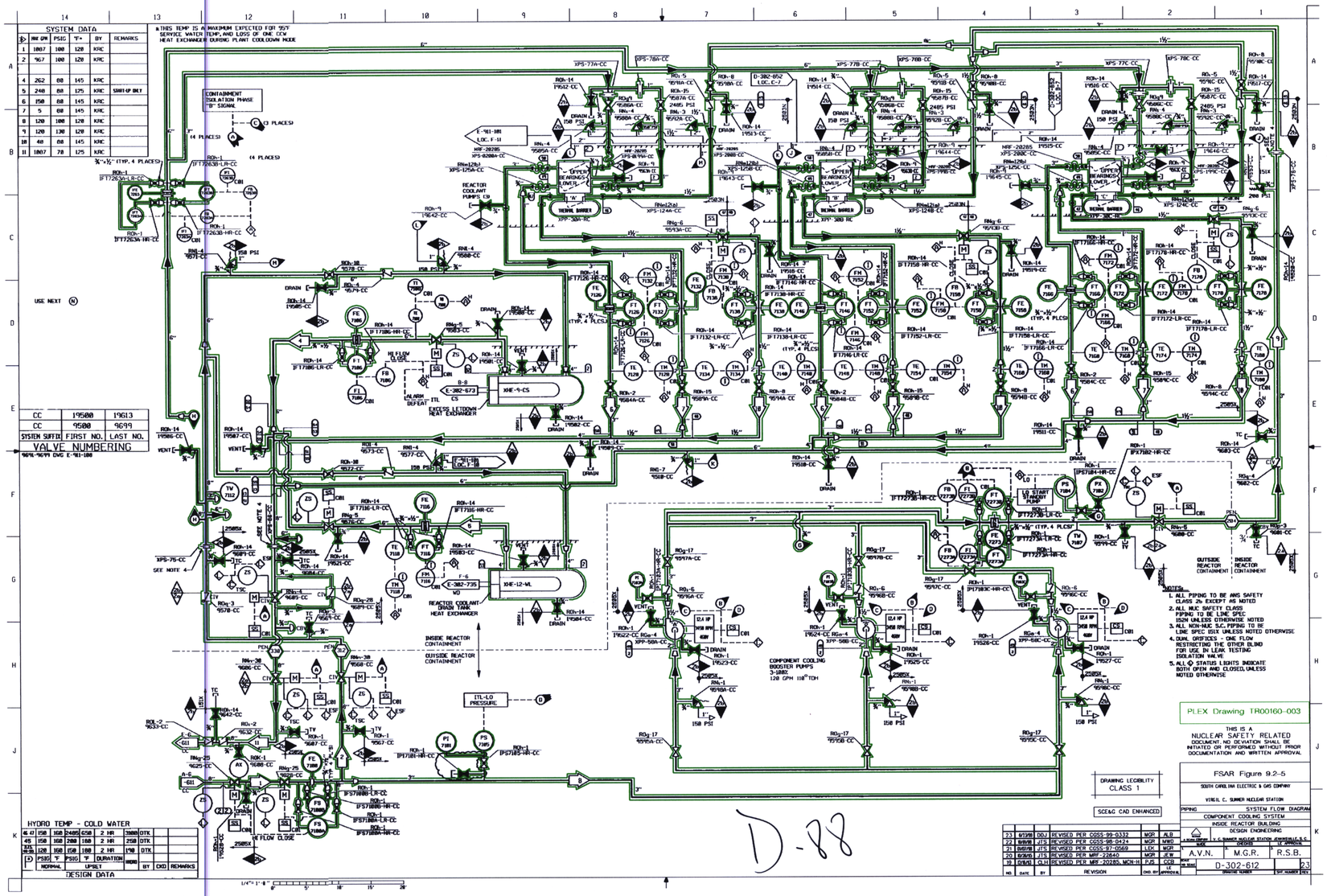

SYSTEM DATA
*THIS TEMP IS A MAXIMUM EXPECTED FOR 95°F SERVICE WATER TEMP, AND LOSS OF ONE CCW HEAT EXCHANGER DURING PLANT COOLDOWN MODE
CONTAINMENT ISOLATION PHASE "B" SIGNAL
USE NEXT
CC 19500 19613
CC 9500 9699
SYSTEM SUFFIX FIRST NO. LAST NO.
VALVE NUMBERING
9691-9699 DWG E-911-100
HYDRO TEMP - COLD WATER
DESIGN DATA
NORMAL
UPSET
REACTOR COOLANT PUMPS
REACTOR COOLANT DRAIN TANK HEAT EXCHANGER
INSIDE REACTOR CONTAINMENT
OUTSIDE REACTOR CONTAINMENT
COMPONENT COOLING BOOSTER PUMPS 3-100% 120 GPM 110° TDH
ITL-LO PRESSURE
OUTSIDE REACTOR CONTAINMENT
INSIDE REACTOR CONTAINMENT
NOTES:
1. ALL PIPING TO BE ANS SAFETY CLASS 2b EXCEPT AS NOTED
2. ALL NUC SAFETY CLASS PIPING TO BE LINE SPEC 152N UNLESS OTHERWISE NOTED
3. ALL NON-NUC S.C. PIPING TO BE LINE SPEC 151X UNLESS NOTED OTHERWISE
4. DUAL ORIFICES - ONE FLOW RESTRICTING THE OTHER BLIND FOR USE IN LEAK TESTING ISOLATION VALVE
5. ALL Φ STATUS LIGHTS INDICATE BOTH OPEN AND CLOSED, UNLESS NOTED OTHERWISE
PLEX Drawing TR00160-003
THIS IS A NUCLEAR SAFETY RELATED DOCUMENT. NO DEVIATION SHALL BE INITIATED OR PERFORMED WITHOUT PRIOR DOCUMENTATION AND WRITTEN APPROVAL
DRAWING LEGIBILITY CLASS 1
SCE&G CAD ENHANCED
FSAR Figure 9.2-5
SOUTH CAROLINA ELECTRIC & GAS COMPANY
VIRGIL C. SUMMER NUCLEAR STATION
PIPING
SYSTEM FLOW DIAGRAM
COMPONENT COOLING SYSTEM
INSIDE REACTOR BUILDING
DESIGN ENGINEERING
V. C. SUMMER NUCLEAR STATION JENKINSVILLE, S.C.
A.V.N.
M.G.R.
R.S.B.
D-302-612
23
D-88