SYSTEM DATA

System	GPM	PSIG	°F	BY	REMARKS
1	500	100	120	JGS	
2	500	5	120	JGS	
3	470	5	120	JGS	
4	50	100	120	JGS	
5	85	5	120	JGS	
6	45	5	120	JGS	

SAFETY CLASS VERIFICATION

ORIGINATED BY	[illegible]
REVIEWED BY	[illegible]

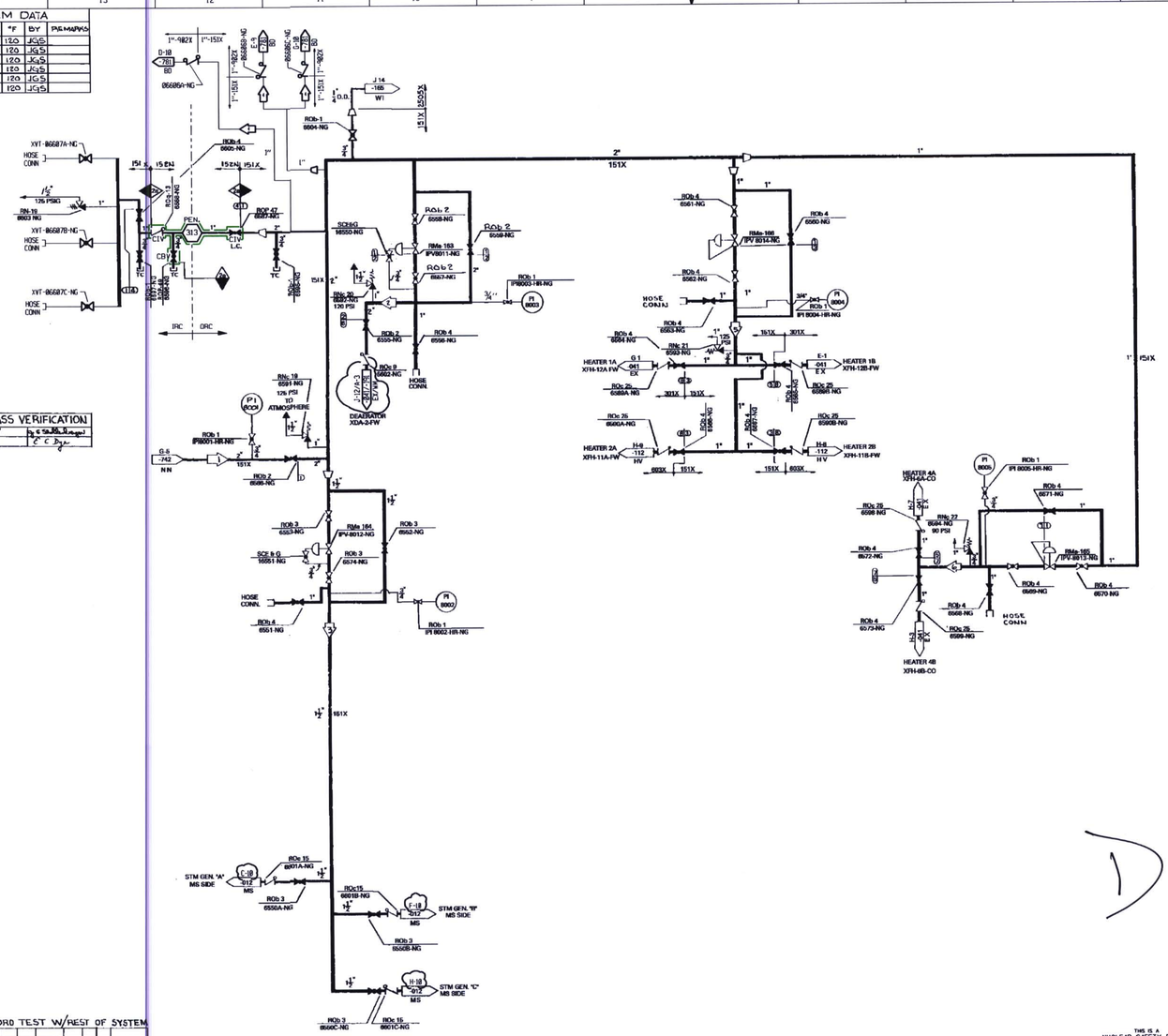

* FOR HYDRO TEST W/REST OF SYSTEM

8	450	420	—	—	—	250*	JGS	REF-041
7	190	120	90	120	<1%	100	JGS	REF-041
6	120	410	—	—	—	100*	JGS	REF-041
5	90	335	—	—	—	110*	JGS	
4	110	120	125	120	<1%	160	PLL	REF-NG 01
3	110	120	125	120	<1%	100	JGS	
2	110	120	120	120	<1%	100	JGS	
1	110	120	125	120	<1%	100	JGS	
ID	FLOW NORMAL	°F NORMAL	PSIG UP-SET	°F UP-SET	BURNOUT PRVNT	DWG	BY	REMARKS

DESIGN DATA 1

1/4" = 1'-0"

THIS IS A NUCLEAR SAFETY RELATED DOCUMENT. NO DEVIATION SHALL BE INITIATED OR PERFORMED WITHOUT PRIOR DOCUMENTATION AND WRITTEN APPROVAL

DRAWING LEGIBILITY CLASS 1
SCE&G CAD ENHANCED

NO.	DATE	BY	REVISION	CHK. BY	LE APPROVAL
12	09/09/98	JTS	REVISED PER CGSS-97-0569	LEK	MGR
11	06/01/95	AVN	REVISED PER MRF-22640	MGR	LEW
10	11/01/91	SRM	REVISED PER MRF-90004 & MRF-90003	MGR	TRC
9	3/10/90	JMH	REVISED AS PER MRF-21714	MGR	LEK
8	9/01/87	RHM	REVISED PER CGSC-16180-DE	SRM	TQL

PLEX Drawing TR00160-006

SOUTH CAROLINA ELECTRIC & GAS COMPANY
VIRGIL C. SUMMER NUCLEAR STATION

PIPING — SYSTEM FLOW DIAGRAM
NITROGEN BLANKETING

DESIGN ENGINEERING
V. C. SUMMER NUCLEAR STATION JENKINSVILLE, S.C.

DRAWN	CHECKED	LE APPROVAL
JMH	MGR	LEK

D-302-311 — 12

x3020018