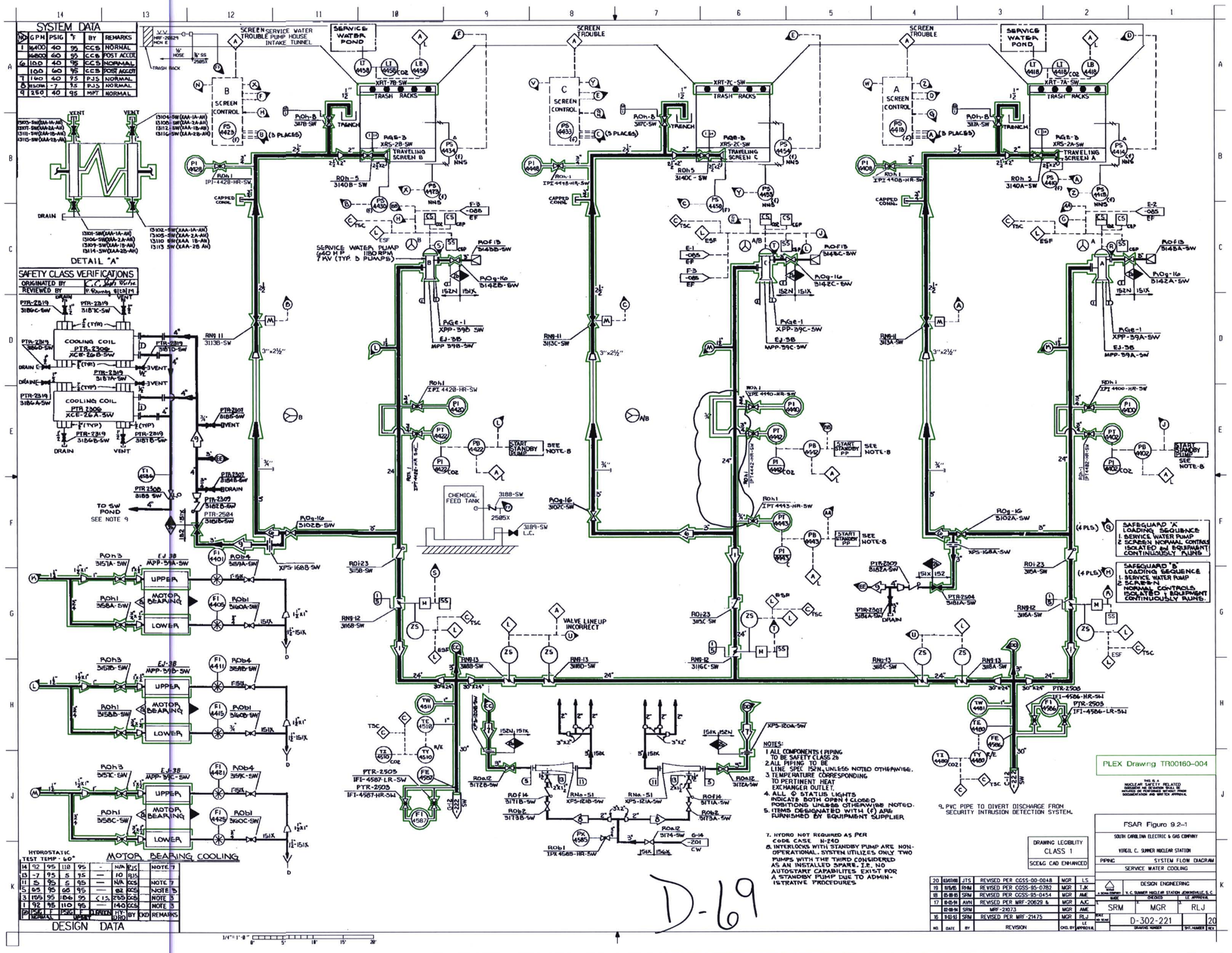
SYSTEM DATA
SERVICE WATER POND
SCREEN TROUBLE
SERVICE WATER TROUBLE PUMP HOUSE INTAKE TUNNEL
TRASH RACKS
TRAVELING SCREEN B
TRAVELING SCREEN C
TRAVELING SCREEN A
SCREEN CONTROL
TRENCH
DETAIL "A"
SAFETY CLASS VERIFICATIONS
COOLING COIL
SERVICE WATER PUMP
CHEMICAL FEED TANK
VALVE LINEUP INCORRECT
TO SW POND
SEE NOTE 9
MOTOR BEARING COOLING
DESIGN DATA
SAFEGUARD 'A' LOADING SEQUENCE
SAFEGUARD 'B' LOADING SEQUENCE
NOTES:
1. ALL COMPONENTS & PIPING TO BE SAFETY CLASS 2b
2. ALL PIPING TO BE LINE SPEC 152N, UNLESS NOTED OTHERWISE.
3. TEMPERATURE CORRESPONDING TO PERTINENT HEAT EXCHANGER OUTLET.
4. ALL Φ STATUS LIGHTS INDICATE BOTH OPEN & CLOSED POSITIONS UNLESS OTHERWISE NOTED.
5. ITEMS DESIGNATED WITH (*) ARE FURNISHED BY EQUIPMENT SUPPLIER.
7. HYDRO NOT REQUIRED AS PER CODE CASE N-240
8. INTERLOCKS WITH STANDBY PUMP ARE NON-OPERATIONAL. SYSTEM UTILIZES ONLY TWO PUMPS WITH THE THIRD CONSIDERED AS AN INSTALLED SPARE. I.E. NO AUTO-START CAPABILITES EXIST FOR A STANDBY PUMP DUE TO ADMINISTRATIVE PROCEDURES
9. PVC PIPE TO DIVERT DISCHARGE FROM SECURITY INTRUSION DETECTION SYSTEM.
PLEX Drawing TR00160-004
DRAWING LEGIBILITY CLASS 1
SCE&G CAD ENHANCED
FSAR Figure 9.2-1
SOUTH CAROLINA ELECTRIC & GAS COMPANY
VIRGIL C. SUMMER NUCLEAR STATION
PIPING SYSTEM FLOW DIAGRAM
SERVICE WATER COOLING
DESIGN ENGINEERING
SRM MGR RLJ
D-302-221
D-69