TAG NUMBER	AIR SUPPLY DWG.	① TAG NUMBER	② TAG NUMBER	③ TAG NUMBER
XDP-22A-AH	B-816-107	XDP-22A-AVI-AH	XDP-22A-PRI-AH	XDP-22A-20A-AH
XDP-22B-AH	B-816-106	XDP-22B-AVI-AH	XDP-22B-PRI-AH	XDP-22B-20A-AH

TAG NUMBER	AIR SUPPLY DWG	① TAG NO	② TAG NO	③ TAG NO	④ TAG NO	⑤ TAG NO	⑥ TAG NO	⑦ TAG NO	⑧ TAG NO
XVB-3A-3H	B-816-107	XVB-3A-AVI-AH	XVB-3A-AV2-AH	XVB-3A-TC-AH	XVB-3A-CVI-AH	IPI-9401-HI IPI-9401-TC	IPI-9401	XVB-3A-PRI-AH	XVB-3A-20A-AH
XVB-4A-AH	B-816-106	XVB-4A-AVI-AH					IPI-9401	XVB-4A PRI-AH	XVB-4A 20A-AH
XVB-3B-AH	B-816-107	XVB-3B-AVI-AH	XVB-3B-AV2-AH	XVB-3B-TC-AH	XVB-3B-CVI-AH	IPI-9402-HI IPI-9402-TC	IPI-9402	XVB-3B PRI-AH	XVB-3B 20A-AH
XVB-4B-AH	B-816-106	XVB-4B-AVI-AH					IPI-9402	XVB-4B-PRI-AH	XVB-4B-20A-AH

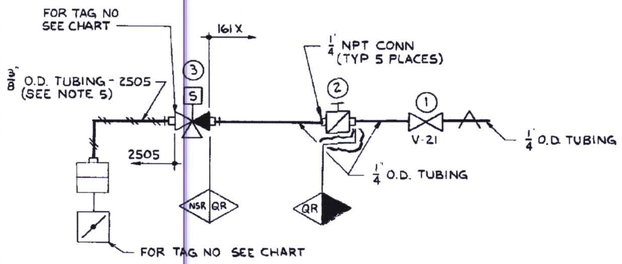

NOTES:

1. FOR PIPE MATERIAL SHOWN ON THIS DWG REFER TO PIPING SPECIFICATIONS SP-337-4461-00 LINE SPEC 161X AND SP-545-044461-000 LINE SPEC 2505.
2. ALL TUBING TO BE 1/4" O.D (UNLESS NOTED).
3. ELECTRICAL CIRCUIT SAFETY CLASS OF SOLENOID VALVE IS 1E.
4. SOLENOID VALVE TO BE SEISMICALLY SUPPORTED
5. ALL 2505 TUBING TO BE SEISMICALLY SUPPORTED. SEE "SEISMIC SUPPORT CRITERIA FOR HVAC TUBING", DWG E-817-401.

REFERENCES
TUBE FITTINGS B/M RKF5(161X), RKF-1(2505)
TUBE B/M RKF4(161X); RKF-2(2505)
VALVE B/M RKF9a
FILTER REGULATOR B/M RKF86
D-912-140 CONTROL RM NORMAL & EMERG AIR HANDLING SYSTEMS FLOW DIAGRAM.

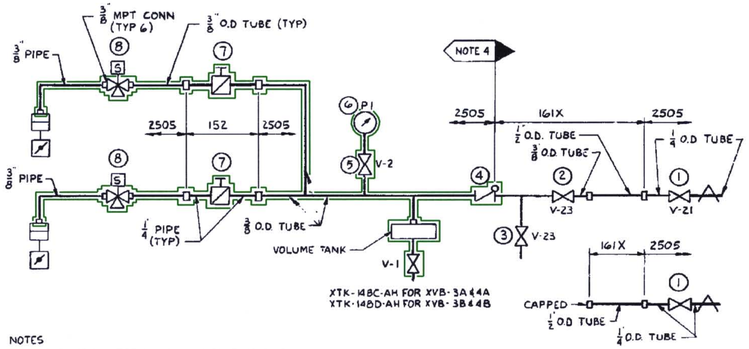

NOTES

1. FOR PIPE MATERIAL SHOWN ON THIS DWG REFER TO PIPING SPECIFICATIONS SP-337-4461-00 LINE SPEC 161X AND SP-545-044461-000 LINE SPEC 2505.
2. ALL TUBING TO BE AS NOTED
3. ELECTRICAL CIRCUIT SAFETY CLASS OF SOLENOID VALVES IS 1E
4. PIPE AND TUBE FROM FLAG TO VALVE OPERATOR IS TO MEET ALL REQUIREMENTS, EXCEPT FOR STAMPING, OF ASME CODE SECTION III, CLASS 3, AND IS SPECIFICALLY INCLUDED IN THE SCOPE OF SPECIFICATION SP-544-044461-000.
5. ALL ITEMS COVERED UNDER NOTE 4 ARE TO BE SEISMICALLY SUPPORTED
6. FOR PHYSICAL ROUTING OF NUCLEAR SAFETY RELATED PIPE & TUBING SEE DWGS C-818-140 SH 1 & SH 2.

REFERENCES:
TUBE FITTINGS B/M RKF5(161X); RKF-1(2505)
TUBE B/M RKF4(161X); RKF-2(2505)

D-912-140 CONTROL RM. NORMAL & EMERG. AIR HANDLING SYSTEMS FLOW DIAGRAM.

D-53

PLEX Drawing TR00160-006

THIS IS A NUCLEAR SAFETY RELATED DOCUMENT. NO DEVIATION SHALL BE INITIATED OR PERFORMED WITHOUT PRIOR DOCUMENTATION AND WRITTEN APPROVAL

REV	DATE	DESCRIPTION	DRAFTING	ENGINEERING	CHKD	SQ CL	APP
14	12/5/84	REVISED PER CGSG 15250	TMN	MK			
13	11/26/84	REVISED PER NRF-32815	MN	MK			
12	1/1/84	"AS BUILT" PER ECN-2472	MN	MK			
11		REVISED TAG NUMBERS AS INDICATED PER ECN-2293 FM	RMZ	YG			
10	1/1/82	REVISED AS INDICATED PER ECN 1948	DB	RE			
9	11/15/81	GENERAL REVISION	DB	PJ			
8	11/16/80	DELETED AIR SUPPLY TO SOLENOID VLV. 7	EW	PJ			
7	12/21/79	REV. G MIN. DIM. PER SFR-1239.	KP	DB			
6	11/28/79	ADDED "NSR" NOTE. ECN NA	KP	DB	PJ	JB	
5	4/4/79	REVISED AS INDICATED 4 PLACES.	DB	MB	PJ	MC	
4	3/26/79	REVISE AS INDICATED PER ECN 1233	DB	PJ	PJ	JB	
3	4/18/74	GENERAL REVISION	DB	PJ	PJ	JB	
2	8/14/78	REVISED AS INDICATED PLACES	JW	PJ	PJ	JW	
1	10/23/77	REV MADE	JW	PJ	PJ	JW	

REVISIONS

DATE	RELEASED FOR	ENGR.
10-10-77	CONSTRUCTION	WCW
	PRELIMINARY NOT FOR CONSTRUCTION	
	BIDDING PURPOSES	

DRAFTING MADE	CHECKED	ENGINEERING INTERFACES 1.	2.	3.
JEV	PJM			
9-15-77	10-3-77			
SQ LDR 10-7-77		ENGINEER APPROVAL	DEPT.	DATE

SCALE: NONE W.O. 044461-000

SOUTH CAROLINA ELECTRIC & GAS COMPANY
VIRGIL C. SUMMER NUCLEAR STATION UNIT #1
I & C INSTRUMENT DETAILS
CONTROL AIR SIGNAL
TUBING DIAGRAM
Gilbert Commonwealth Companies
GILBERT ASSOCIATES, INC. ENGINEERS AND CONSULTANTS READING, PA

DRAWING NUMBER	SH. NO.	REV
04 4461 B-817-113		14

1/4"=1'-0" 0' 5' 10' 15' 20'

CONTROL AIR SIGNAL TUBING DIAGRAM