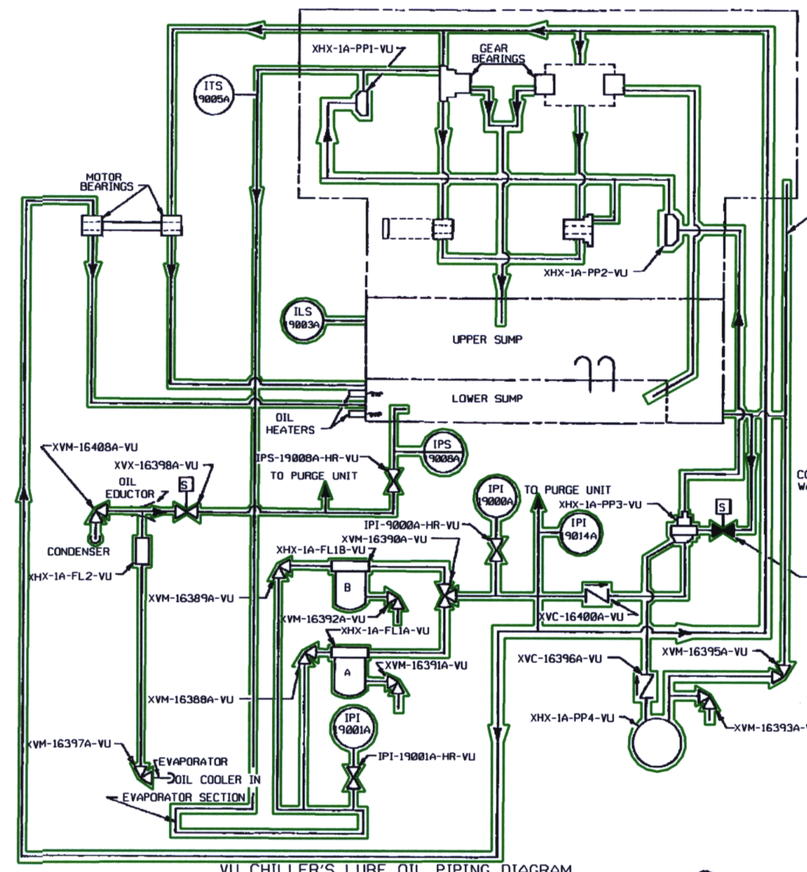

VU CHILLER'S LUBE OIL PIPING DIAGRAM
"A" UNIT SHOWN - "B" & "C" IDENTICAL

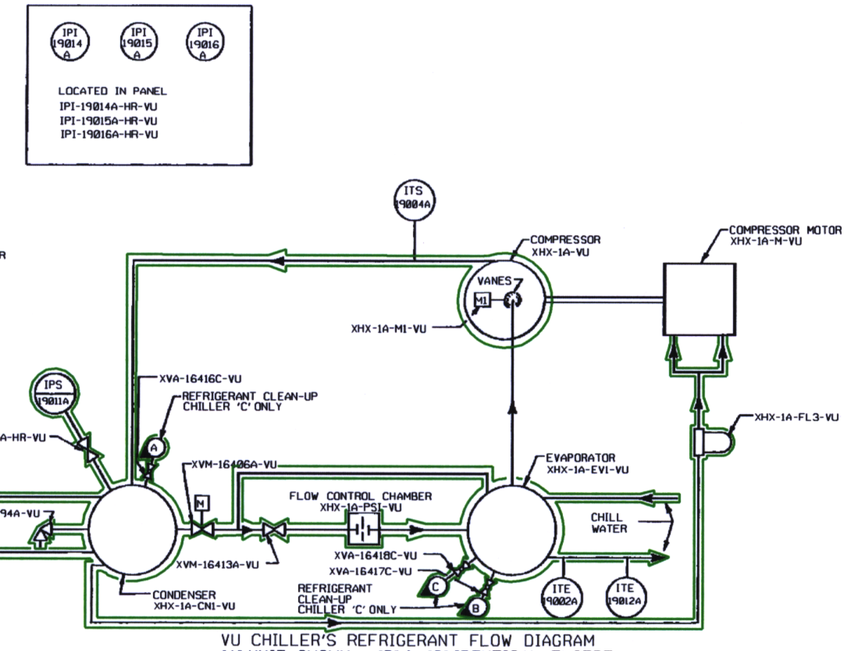

VU CHILLER'S REFRIGERANT FLOW DIAGRAM
"A" UNIT SHOWN - "B" & "C" IDENTICAL, EXCEPT
FOR CLEAN-UP ON "C" CHILLER ONLY

FOR VU MECHANICAL CHILLERS SKID SEE DWG. IMS-54-064-1-0

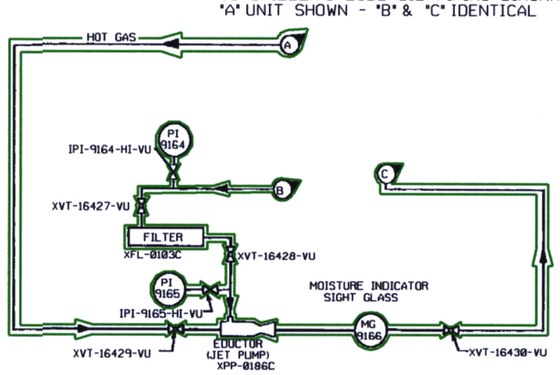

CHILLER "C" ONLY
REFRIGERANT CLEAN-UP

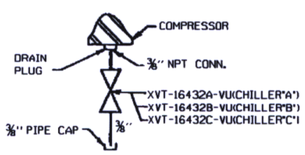

DETAIL "A"

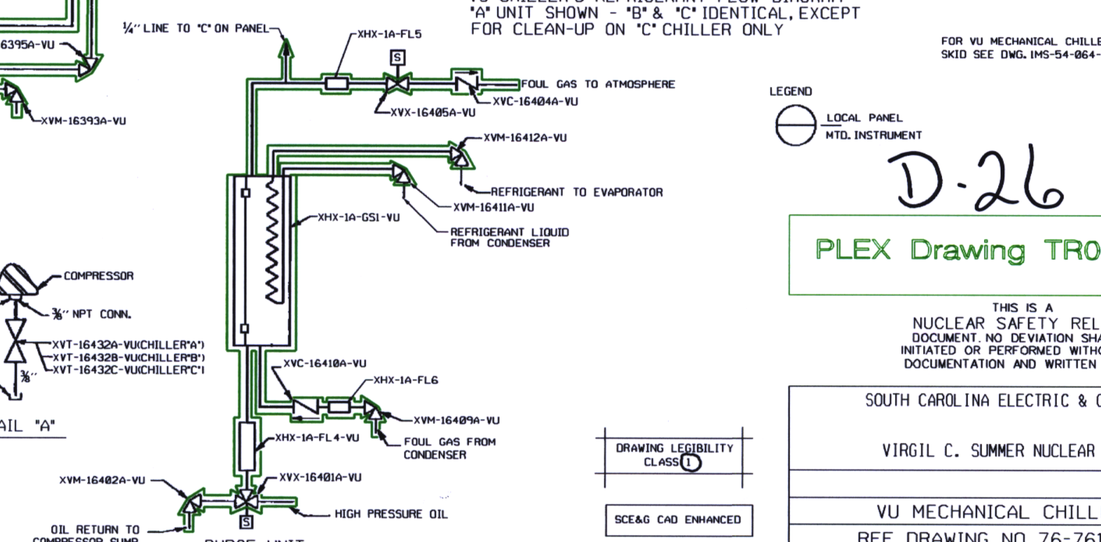

PURGE UNIT

LEGEND
LOCAL PANEL MTD. INSTRUMENT

D-26

PLEX Drawing TR00160-003

THIS IS A
NUCLEAR SAFETY RELATED
DOCUMENT. NO DEVIATION SHALL BE
INITIATED OR PERFORMED WITHOUT PRIOR
DOCUMENTATION AND WRITTEN APPROVAL

DRAWING LEGIBILITY CLASS 1

SCE&G CAD ENHANCED

REV	BY	CHECKED	LE APPROVAL	REVISIONS
6	DDJ	MGR	3/24/98	REVISED PER CGSS-97-0662
5	DDJ	MGR	1/6/98	REVISED PER ECR-50029 WRF REPLACES PURGE UNITS FOR A, B & C
4	SRF	RHM	04-24-92	REVISED PER WRF-21051
3	DDJ	MGR	RW 2/7/91	REVISED PER CGSS-27257-DE
2	KS	PFA	KS	REVISED PER MRE-2114. INTERFACE
1	NZ	NZ	NZ	REVISED PER MRE-10747 MCN A INTERFACE

SOUTH CAROLINA ELECTRIC & GAS COMPANY

VIRGIL C. SUMMER NUCLEAR STATION

VU MECHANICAL CHILLERS

REF DRAWING NO. 76-761609-1

SCE&G A SCANA COMPANY

DESIGN ENGINEERING
V. C. SUMMER NUCLEAR STATION JENKINSVILLE S. C.

MADE	CHECKED	LE APPROVAL
1. DDJ	2. MGR	3. R. WORD

SCALE	DRAWING NUMBER	SHT. NUMBER	REV
NONE	IMS-54-064	2	6

cadd file = xv540022

VU MECH CHILLERS