ITEM	PART NO.	QTY.	DESCRIPTION	MATERIAL
1	C-2974-A	4	TIE ROD	STRESSPROOF
2	CFP-294-A	4	TIE ROD NUT	GRADE B 1¾-12
3	C-2975-D	1	CYLINDER CAP	A36 STEEL
4	CFP-227-A	4	TUBE END SEAL-389	VITON E60C OR 2170
5	C-2976-A	1	AIR STORAGE TUBE	A106 GR.C - SEAMLESS STL.
6	C-2977-D	1	CENTER HEAD	A36 STEEL
7	C-2978-A	2	TUBE END SEAL-280	VITON E60C OR 2170
8	C-2979-A	2	PISTON PACKING	VITON E60C OR 2170
9	C-2980-A	1	PISTON O-RING-382	VITON E60C OR 2170
10	C-2981-C	1	PISTON	DUCTILE IRON 80550G
11	C-2982-A	1	PISTON ROD SEAL-222	VITON E60C OR 2170

NOTE:
THE FOLLOWING PARTS ARE SAFETY RELATED/ESSENTIAL TO FUNCTION KEY NUMBERS 1, 2, 3, 4, 5, 6, 7, 8, 9, 10, 11, 12, 13, 14, 15, 16, 17, 22, 23 AND 27.

ITEM	PART NO.	QTY.	DESCRIPTION	MATERIAL
12	C-2983-B	1	PISTON ROD	1045 CHR. PL. STEEL
13	C-2984-A	1	CYLINDER TUBE	A106 GR. C- SEAMLESS STL.
14	C-2985-A	1	INNER CYL. TUBE	C.D. SEAMLESS STL.
15	C-2986-A	1	ROD PACKING	VITON E60C OR 2170
16	C-2987-E	1	CYL. HEAD-RABBET MT.	A36 STEEL
17	C-2988-A	1	ROD BUSH. SEAL -039	VITON E60C OR 2170
18	C-2989-B	1	ROD BUSHING	BRONZE S.A.E. 660
19	C-2990-A	1	ROD BUSHING RETAINER	STEEL 11L17
20	C-2991-A	1	ROD WIPER	VITON E60C OR 2170
21	C-2992-A	8	SOC. HD. CAPSCREW ⅜-16×1	HEAT TREATED ALLOY STEEL
22	C-3069-A	1	O-RING -110	VITON E60C OR 2170

ITEM	PART NO.	QTY	DESCRIPTION	MATERIAL
23	C-3068-A	1	CHECK VALVE	
24	C-3196-A	1	CHECK VALVE PORTING BLOCK	ALUMINUM 6061
25	C-3067-A	2	SOC. HD. CAPSCREW ⅝-18×1½	HEAT TREATED ALLOY STEEL
26	CFP-[illegible]-A	6	½ NPT PIPE PLUG	HEAT TREATED ALLOY STEEL
27	CFP-244-A	1	O-RING - 116	VITON E60C OR 2170
28		1	O-RING 2-228	VITON E60C OR 2170
29	SCE&G	1	SEAL PLATE	STAINLESS STEEL 316

• NOT SHOWN IN CENTER HEAD

NOTE:
2. ALL HEAT TREATED ALLOY STEEL FASTENERS HAVE A TENSILE STRENGTH OF 180 KSI FOR DIAMETERS UP TO ½", AND 170 KSI FOR DIAMETERS OF ⅝" AND LARGER.

SCE&G Design MRF 20724
Equipment No. XVG-1611A,B,C-D-FW

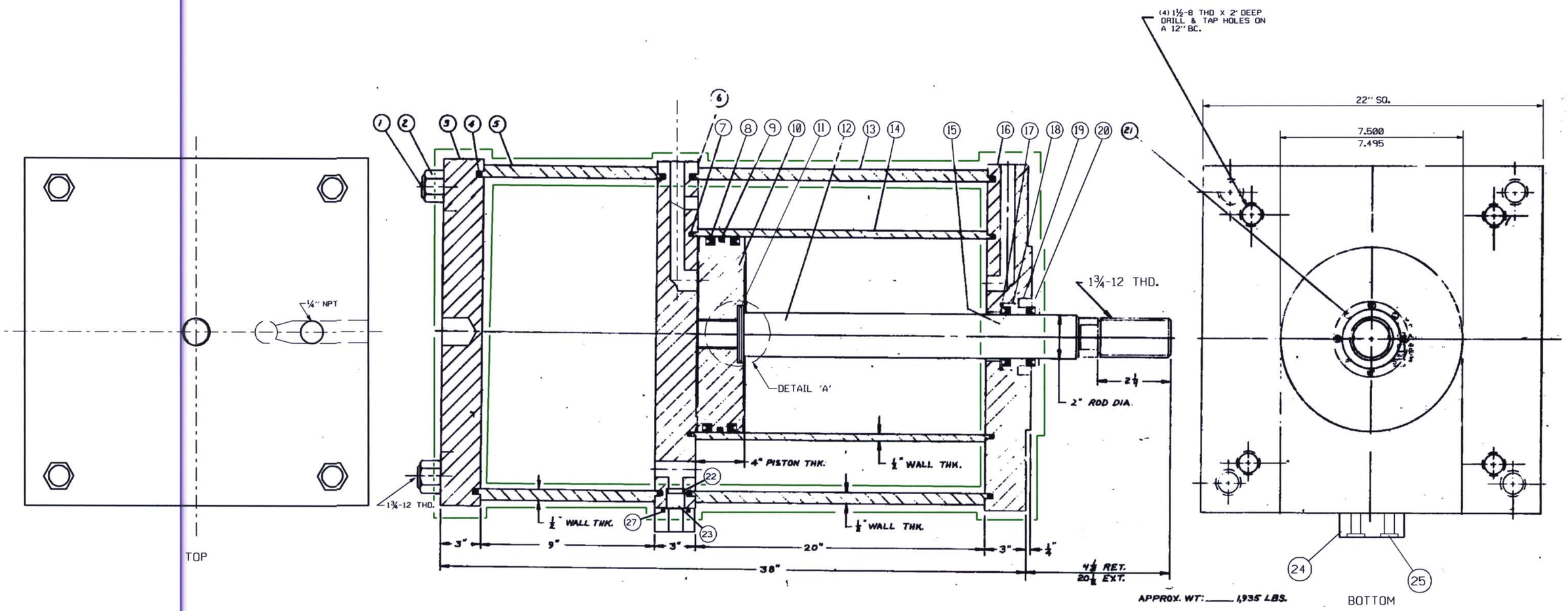

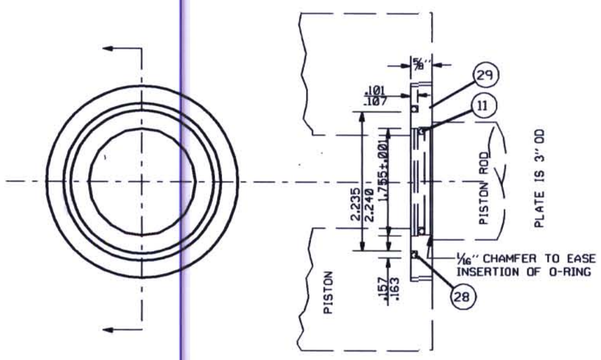

DETAIL 'A'
XVG-1611C-0-FW ONLY

D-18

PLEX Drawing TR00160-006

ATWOOD & MORRILL CO. INC. # 15779-01
SO. CAROLINA ELECTRIC & GAS CO. P.O. # Q487212
V.C. SUMMER NUCLEAR STATION, UNIT #1
TAG NOS: XVG-1611A-FW
XVG-1611B-FW
XVG-1611C-FW

UPGRADED 7-11-88 JF
UPGRADED 4-13-88 F.C.
UPGRADED 7-15-88 JF
REVISIONS

MACHINING TOLERANCES

CHICAGO FLUID POWER
DRAWN: NOWE 1-27-88
APPROVED BY: JA
TITLE: ACTUATOR CYLINDER ASSEMBLY
C-2963-D

NO.	DATE	BY	REVISION	CKD. BY	LE APPROVAL
0	11/1/89	ACI	AS-BUILT PER MRF-20724	SRF	GGW

DESIGN ENGINEERING
V. C. SUMMER NUCLEAR STATION JENKINSVILLE S. C.
MADE: ACI | CHECKED: SRF | LE APPROVAL: GGW
SCALE: NO SCALE
DRAWING NUMBER: 1MS-25-898
SHT. NUMBER: 0
REV: 0