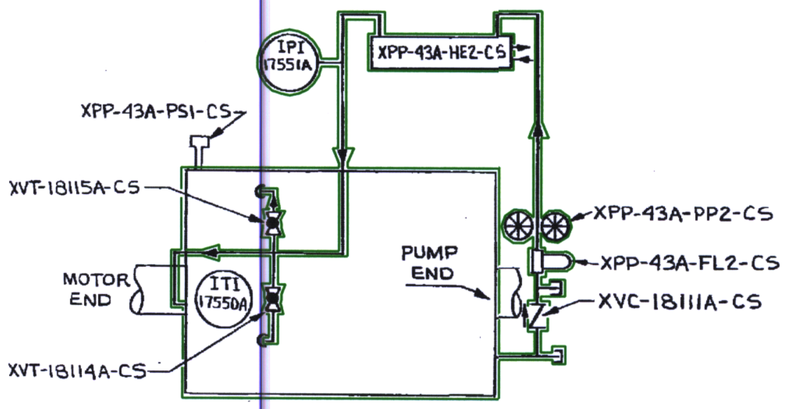

LUBE OIL FLOW DIAGRAM FOR PUMP GEARBOX
"A" PUMP SHOWN - "B" & "C" PUMPS IDENTICAL

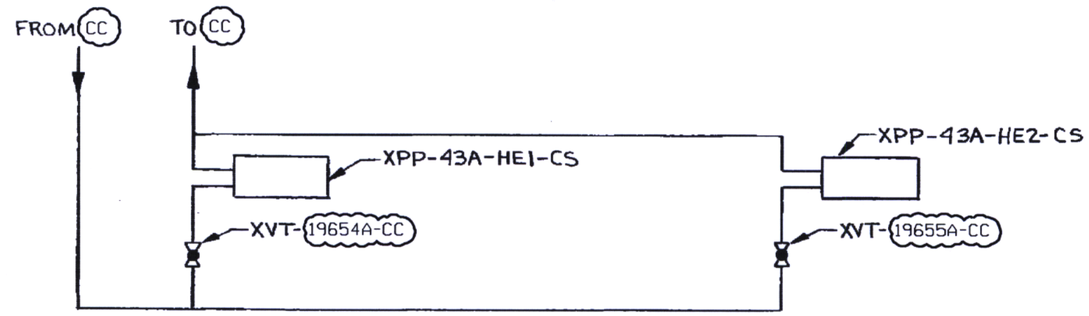

COOLING WATER FLOW DIAGRAM FOR HEAT EXCHANGERS
PUMP "A" SHOWN - "B" & "C" PUMPS IDENTICAL

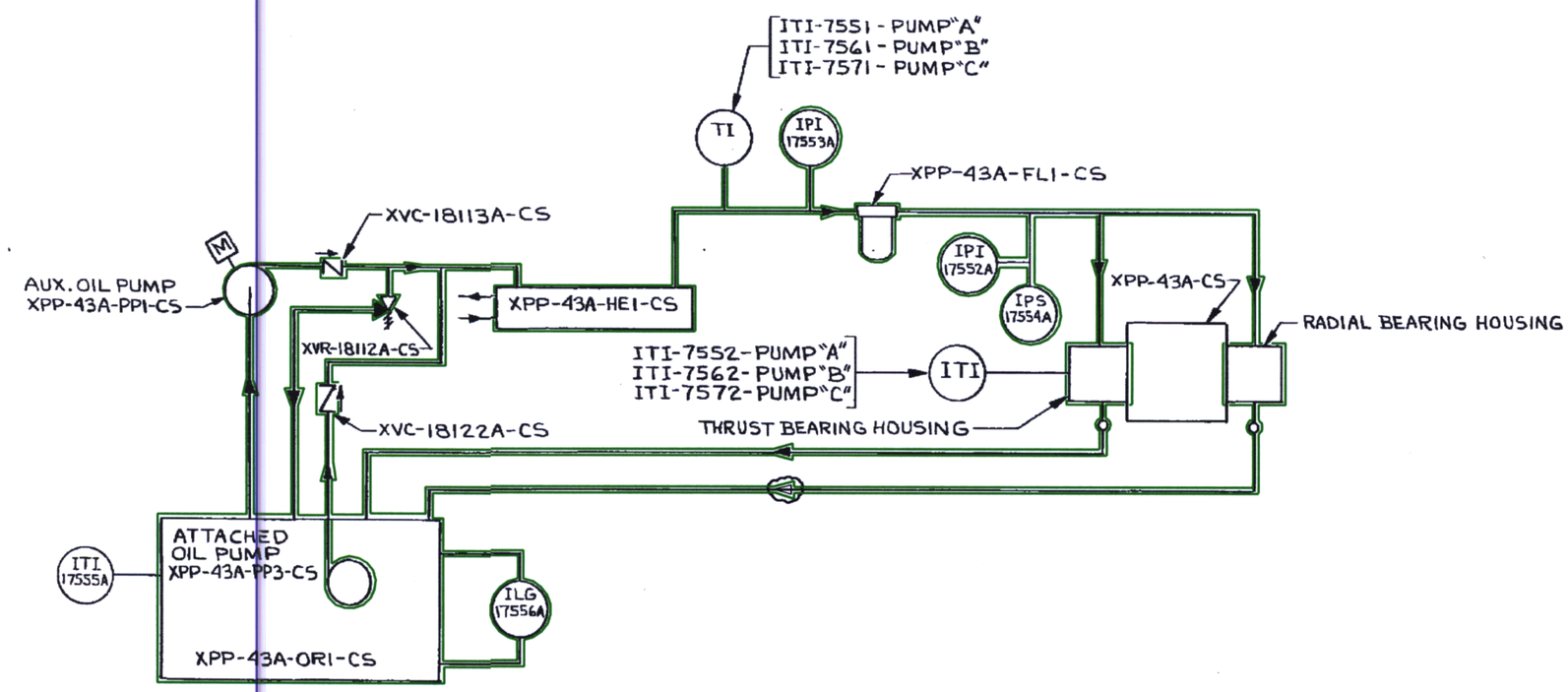

LUBE OIL SYSTEM FLOW DIAGRAM FOR PUMP BEARINGS
"A" PUMP SHOWN - "B" & "C" PUMPS IDENTICAL

FOR SAFETY INJECTION PUMPS
SKID SEE IMS-12-004 SHT. 1

SOUTH CAROLINA ELECTRIC & GAS CO.
Virgil C. Summer Nuclear Station Unit No. 1

- [x] APPROVED
- [ ] APPROVED AS NOTED
- [ ] RETURNED FOR CORRECTION

CHECKING IS ONLY FOR GENERAL DESIGN AND GENERAL DIMENSIONS. SEE FOLLOW IN CONTRACT DOCUMENTS AND DOES NOT RELIEVE CONTRACTOR FROM HIS OBLIGATION AS TO DETAIL, WORKMANSHIP AND GUARANTEES.

GILBERT ASSOCIATES, INC.
BY [signature]
R/M ITEM No. _____ DATE 1-3-83

D-16

DRAFTING		ENGINEERING INTERFACES		
MADE AAL 7-21-82	CHECKED VGS 11-1-82	1. I&C E.J. Segal	2.	3.
PROJ DFG SUPR P.J. Settock 11-9-82		D.T. Dembrick 0428 ENGINEER APPROVAL DEPT. DATE		
SCALE ~		W.O.		

DRAWING LEGIBILITY
CLASS 2
SCE&G CAD ENHANCED

NO.	DATE	BY	REVISION	CKD. BY	LE APPROVAL
1	1/6/83	DDJ	REVISED PER MRF-22594	RHM	CHR

PLEX Drawing TR00160-002

CHARGING/SAFETY
INJECTION PUMPS

VENDOR/DRAWING NO.: FC-49179

DESIGN ENGINEERING
V. C. SUMMER NUCLEAR STATION JENKINSVILLE, S.C.

MADE	CHECKED	LE APPROVAL
DDJ	RHM	CHR

SCALE NO SCALE — DRAWING NUMBER 1MS-12-004 — SHT. NUMBER 2 — REV 1

v012_0004_0002

1/4"=1'-0" 0' 5' 10' 15' 20'