NUREG/CR- 5609
ORNL/TM-13705

Electromagnetic Compatibility Testing for Conducted Susceptibility Along Interconnecting Signal Lines

Draft Report for Comment

Oak Ridge National Laboratory

U.S. Nuclear Regulatory Commission
Office of Nuclear Regulatory Research
Washington, DC 20555-0001

AVAILABILITY OF REFERENCE MATERIALS IN NRC PUBLICATIONS

NRC Reference Material

As of November 1999, you may electronically access NUREG-series publications and other NRC records at NRC's Public Electronic Reading Room at http://www.nrc.gov/reading-rm.html. Publicly released records include, to name a few, NUREG-series publications; *Federal Register* notices; applicant, licensee, and vendor documents and correspondence; NRC correspondence and internal memoranda; bulletins and information notices; inspection and investigative reports; licensee event reports; and Commission papers and their attachments.

NRC publications in the NUREG series, NRC regulations, and *Title 10, Energy*, in the Code of *Federal Regulations* may also be purchased from one of these two sources.

1. The Superintendent of Documents
   U.S. Government Printing Office
   Mail Stop SSOP
   Washington, DC 20402–0001
   Internet: bookstore.gpo.gov
   Telephone: 202-512-1800
   Fax: 202-512-2250
2. The National Technical Information Service
   Springfield, VA 22161–0002
   www.ntis.gov
   1–800–553–6847 or, locally, 703–605–6000

A single copy of each NRC draft report for comment is available free, to the extent of supply, upon written request as follows:

Address: Office of the Chief Information Officer,
Reproduction and Distribution
Services Section
U.S. Nuclear Regulatory Commission
Washington, DC 20555-0001
E-mail: DISTRIBUTION@nrc.gov
Facsimile: 301–415–2289

Some publications in the NUREG series that are posted at NRC's Web site address http://www.nrc.gov/reading-rm/doc-collections/nuregs are updated periodically and may differ from the last printed version. Although references to material found on a Web site bear the date the material was accessed, the material available on the date cited may subsequently be removed from the site.

Non-NRC Reference Material

Documents available from public and special technical libraries include all open literature items, such as books, journal articles, and transactions, *Federal Register* notices, Federal and State legislation, and congressional reports. Such documents as theses, dissertations, foreign reports and translations, and non-NRC conference proceedings may be purchased from their sponsoring organization.

Copies of industry codes and standards used in a substantive manner in the NRC regulatory process are maintained at—

The NRC Technical Library
Two White Flint North
11545 Rockville Pike
Rockville, MD 20852–2738

These standards are available in the library for reference use by the public. Codes and standards are usually copyrighted and may be purchased from the originating organization or, if they are American National Standards, from—

American National Standards Institute
11 West 42nd Street
New York, NY 10036–8002
www.ansi.org
212–642–4900

Legally binding regulatory requirements are stated only in laws; NRC regulations; licenses, including technical specifications; or orders, not in NUREG-series publications. The views expressed in contractor-prepared publications in this series are not necessarily those of the NRC.

The NUREG series comprises (1) technical and administrative reports and books prepared by the staff (NUREG–XXXX) or agency contractors (NUREG/CR–XXXX), (2) proceedings of conferences (NUREG/CP–XXXX), (3) reports resulting from international agreements (NUREG/IA–XXXX), (4) brochures (NUREG/BR–XXXX), and (5) compilations of legal decisions and orders of the Commission and Atomic and Safety Licensing Boards and of Directors' decisions under Section 2.206 of NRC's regulations (NUREG–0750).

DISCLAIMER: This report was prepared as an account of work sponsored by an agency of the U.S. Government. Neither the U.S. Government nor any agency thereof, nor any employee, makes any warranty, expressed or implied, or assumes any legal liability or responsibility for any third party's use, or the results of such use, of any information, apparatus, product, or process disclosed in this publication, or represents that its use by such third party would not infringe privately owned rights.

NUREG/CR-5609
ORNL/TM-13705

Electromagnetic Compatibility Testing for Conducted Susceptibility Along Interconnecting Signal Lines

Draft Report for Comment

Manuscript Completed: May 2002
Date Published: July 2002

Prepared by:
P.D. Ewing, R.T. Wood, K. Korsah,
A.A. Shourbaji, T.L. Wilson, and B.M. Beets

Oak Ridge National Laboratory
Managed by UT-Battelle, LLC
Oak Ridge, TN 37831-6370

C.E. Antonescu, NRC Project Manager

Prepared for:
Division of Engineering Technology
Office of Nuclear Regulatory Research
U.S. Nuclear Regulatory Commission
Washington, DC 20555-0001
NRC Job Code W6960

COMMENTING ON DRAFT REPORTS

Any interested party may submit comments on this report for consideration by the NRC staff. Comments may be accompanied by additional relevant information or supporting data. Please specify the report number **Draft NUREG/CR-5609** in your comments, and send them by the end of the 60 day comment period specified in the Federal Register notice announcing availability of this draft.

Chief, Rules and Directives Branch
Mail Stop: T6-D59
U.S. Nuclear Regulatory Commission
Washington, DC 20555-0001

You may also provide comments at the NRC Web site:

http://www.nrc.gov/public-involve/doc-comment/form.html

For any questions about the material in this report, please contact:

Christina Antonescu
Mail Stop T10-L1
U.S. Nuclear Regulatory Commission
Washington, DC 20555-0001
Phone: (301) 415-6792
E-mail: cea1@nrc.gov

ABSTRACT

This document presents recommendations and the associated technical basis for addressing the effects of conducted electromagnetic interference (EMI) and radio-frequency interference (RFI) along interconnecting signal lines in safety-related instrumentation and control (I&C) systems. Oak Ridge National Laboratory has been engaged in assisting the U.S. Nuclear Regulatory Commission Office of Nuclear Regulatory Research in developing the technical basis for regulatory guidance on EMI/RFI immunity and power surge withstand capability (SWC). Previous research efforts have provided recommendations on (1) electromagnetic compatibility design and installation practices, (2) the endorsement of EMI/RFI and SWC test criteria and test methods, (3) the determination of ambient electromagnetic conditions at nuclear power plants, and (4) the development of recommended electromagnetic operating envelopes applicable to locations where safety-related I&C systems will be installed. The current research focuses on the susceptibility of I&C systems to conducted EMI/RFI along interconnecting signal lines. Coverage of signal line susceptibility was identified as an open issue in previous research on establishing the technical basis for EMI/RFI and SWC in safety-related I&C systems. Research results provided in this report will be used to establish the technical basis for endorsing U.S. Department of Defense and European Committee for Electrotechnical Standardization test criteria and test methods that address signal-line susceptibility. In addition, recommendations on operating envelopes are presented based on available technical information.

CONTENTS

Page

ABSTRACT iii

FIGURES vii

TABLES ix

EXECUTIVE SUMMARY xiii

ACKNOWLEDGMENTS xv

ACRONYMS xvii

GLOSSARY xix

1 INTRODUCTION 1

2 SEARCH OF LICENSEE EVENT REPORTS DATABASE 1
- 2.1 Search Procedure 1
- 2.2 Data Analysis 3
- 2.3 Findings From LER Database Search 6

3 REVIEW OF EMI/RFI AND SWC STANDARDS 8
- 3.1 IEEE Std C62.41 and IEEE Std C62.45 8
- 3.2 MIL-STD-461E 9
- 3.3 MIL-STD-464 10
- 3.4 IEC 61000-4 11
- 3.5 Findings from Review of Standards 11

4 RECOMMENDED EMI/RFI AND SWC TESTS 13
- 4.1 IEC 61000-4 Tests 13
  - 4.1.1 IEC 61000-4, Electrical Fast Transient/Burst 13
  - 4.1.2 IEC 61000-4-5, Surge Waves 16
  - 4.1.3 IEC 61000-4-6, Immunity to Radio-Frequency Conducted Disturbances 17
  - 4.1.4 IEC 61000-4-12, Oscillatory Waves 19
  - 4.1.5 IEC 61000-4-16, Conducted, Common Mode Disturbances 23
- 4.2 MIL-STD-461E 25
  - 4.2.1 CS114, Conducted Susceptibility, Bulk Cable Injection, 10 kHz to 200 MHz 25
  - 4.2.2 CS115, Bulk Cable Injection, Impulse Excitation 26
  - 4.2.3 CS116, Damped Sinusoidal Transients, Cables and Power Leads 27

5 EXPERIMENTAL INVESTIGATION ON CONDUCTED EMI/RFI 32
- 5.1 Description of EDSC 32
- 5.2 EMI/RFI Test Methods and Operating Envelopes 33
  - 5.2.1 CS114 Test, Bulk Cable Injection of CW EMI/RFI 33
  - 5.2.2 CS115 Test, Bulk Cable Injection of Impulse Excitations 34
  - 5.2.3 CS116, Injection of Damped Sinusoidal Transients 35
- 5.3 EMI/RFI-Induced Errors in the EDSC 35
- 5.4 Conducted EMI/RFI Susceptibility Test Results 36

6 CONDUCTED EMI/RFI ON TEST ARTIFACT 37
6.1 Description of Artifact and Interface Module Schematics 38
6.1.1 Artifact Module 38
6.1.2 Interface Module 38
6.1.3 PCI-1200 I/O Cards 42
6.2 System Software 43
6.2.1 System Algorithm 43
6.2.2 Types of Errors Encountered 45
6.3 Artifact Testing 45
6.3.1 General Test Procedure 46
6.3.2 CS114 Test Summary 46
6.3.3 CS115 Test Summary 47
6.3.4 CS116 Test Summary 49
6.3.5 IEC 61000-4-4 Test Summary 50
6.3.6 IEC 61000-4-5 Test Summary 51
6.3.7 IEC 61000-4-6 Test Summary 52
6.3.8 IEC 61000-4-12 Test Summary 54
6.3.9 MIL-STD and IEC Comparison of Test Results 57

7 OPERATING ENVELOPES FOR THE NPP ENVIRONMENT 58

8 CONCLUSIONS 59

9 REFERENCES 59

APPENDIX A. OBSERVATIONS ABOUT THE LICENSE EVENT REPORT DATABASE 61

FIGURES

		Page
2.1	Signal-line EMI/RFI events in the LER database	3
2.2	EMI/RFI events by year (excluding radiation monitor events)	4
2.3	EMI/RFI events for radiation monitors	4
2.4	Reportable occurrence statistics (excluding radiation monitor events)	5
2.5	Statistics on EMI/RFI sources (excluding radiation monitor events)	6
2.6	Affected component statistics (excluding radiation monitor events)	7
4.1	Fast transients/bursts	14
4.2	Waveform of fast transient	14
4.3	Waveform of 1.2/50-μs open-circuit voltage	16
4.4	Waveform of 8/20-μs open-circuit current	17
4.5	Waveform of the ring wave	20
4.6	Waveform of the damped oscillatory wave	20
4.7	CS114 test setup	25
4.8	CS114 calibration setup	26
4.9	CS114 operating envelopes	27
4.10	CS115 test setup	28
4.11	CS115 calibration setup	28
4.12	Characteristics of CS115 test signal	29
4.13	CS116 test setup	30
4.14	CS116 calibration setup	30
4.15	Waveform of CS116 test signal	31
4.16	CS116 operating envelope	31
5.1	Block diagram of the experimental digital safety channel	33
6.1	ORNL artifact system	38

6.2 System-level artifact schematic 39

6.3 Artifact module printed circuit board 40

6.4 Interface module printed circuit board 41

6.5 Simplified diagram of setup for IEC 61000-4-4 test 50

6.6 Setup for IEC 61000-4-5 test 52

6.7 Setup for IEC 61000-4-6 test 53

6.8 Setup for IEC 61000-4-12 test 55

TABLES

		Page
2.1	LER statistical event categories	2
3.1	Representative power surge waveforms	9
3.2	Applicable MIL-STD-461E test criteria for conducted EMI/RFI	10
3.3	IEC 61000-4 immunity test methods	11
3.4	Applicable MIL-STD-461E test criteria for signal-line testing	12
3.5	Applicable IEC 61000-4 test criteria for signal-line testing	12
3.6	Applicability of recommended MIL-STDE test criteria	13
4.1	Guidelines for selecting levels associated with IEC 61000-4-4	15
4.2	Specified test levels for IEC 61000-4-4	15
4.3	Guidelines for selecting levels associated with IEC 61000-4-5	18
4.4	Specified test levels for IEC 61000-4-5	18
4.5	Guidelines for selecting levels associated with IEC 61000-4-6	19
4.6	Specified test levels for IEC 61000-4-6	19
4.7	Guidelines for selecting levels associated with ring wave test	21
4.8	Specified test levels for ring wave test	22
4.9	Guidelines for selecting levels associated with damped oscillatory wave test	22
4.10	Specified test levels for damped oscillatory wave test	22
4.11	Test levels for continuous disturbance (dc and power line frequency)	23
4.12	Test levels for short duration disturbance (dc and power line frequency)	23
4.13	Test levels for conducted disturbance, 15 Hz to 150 kHz	24
4.14	Guidelines for selecting levels associated with IEC 61000-4-16	24
4.15	Selection criteria for CS114 operating envelopes	27
6.1	Control word content for PCU1 ports configuration (Mode 0)	42
6.2	Bit designations for the ports during each configuration in Mode 0	43

6.3 Control word content for PCU2 ports configuration (Mode 0) 43

6.4 CS114 test results: power line 46

6.5 CS114 test results: analog signal line 47

6.6 CS114 test results: digital signal line 47

6.7 CS115 calibration settings for pulse generator 48

6.8 CS115 test results: analog signal line 48

6.9 CS115 test results: digital signal line 48

6.10 CS115 test results: power line 48

6.11 CS116 calibration settings for signal generator 49

6.12 CS116 test results: analog signal line 49

6.13 CS116 test results: digital signal line 49

6.14 CS116 test results: power line 50

6.15 IEC 61000-4-4 test results: analog signal line 51

6.16 IEC 61000-4-4 test results: digital signal line 51

6.17 IEC 61000-4-4 test results: power line—line to ground 51

6.18 IEC 61000-4-4 test results: power line—neutral to ground 51

6.19 IEC 61000-4-4 test results: power line—line to neutral 51

6.20 IEC 61000-4-5 power line test results [peak voltage (kV)] 52

6.21 IEC 61000-4-6 test results: digital line 53

6.22 IEC 61000-4-6 test results: analog line 54

6.23 IEC 61000-4-6 test results: power line 54

6.24 IEC 61000-4-12 test results: power line—line to ground—random 55

6.25 IEC 61000-4-12 test results: power line—line to line—random 56

6.26 IEC 61000-4-12 test results: power line—line to line—phase 56

6.27 IEC 61000-4-12 test results: power line—line to ground—phase 56

6.28 Overview of MIL-STD and IEC standards used in artifact tests 56

7.1 ORNL-recommended levels for IEC 61000-4 58

7.2 ORNL-recommended levels for MIL-STD tests 59

EXECUTIVE SUMMARY

In recent years, Oak Ridge National Laboratory (ORNL) has been engaged by the U.S. Nuclear Regulatory Commission Office of Nuclear Regulatory Research to develop the technical basis for establishing regulatory guidance on electromagnetic interference (EMI), radio-frequency interference (RFI), and surge withstand capability (SWC) in safety-related instrumentation and control (I&C) systems. Several NUREG/CR reports (e.g., NUREG/CR-5491, NUREG/CR-6436, and NUREG/CR-6431) have been published to document previous research and to outline recommended electromagnetic compatibility (EMC) guidelines. The guidelines are based on existing standards (commercial and military) and limited confirmatory research. Previous research efforts have provided recommendations on (1) EMC design and installation practices, (2) the endorsement of EMI/RFI and SWC test criteria and test methods, (3) the determination of ambient electromagnetic conditions at nuclear power plants, and (4) the development of recommended electromagnetic operating envelopes applicable to locations where safety-related I&C systems will be installed.

One critical issue that was not covered in previous research is the vulnerability of equipment to adverse effects from conducted disturbances (EMI/RFI and SWC) along interconnecting signal lines. To address this open issue, ORNL launched a confirmatory research effort to assess existing standards for their applicability in evaluating the susceptibility of signal lines to EMI/RFI and power surges. Commercial standards from the Institute of Electrical and Electronics Engineers (IEEE), International Electrotechnical Commission (IEC), and European Committee for Electrotechnical Standardization were investigated, as well as military standards (MIL-STDs) from the U.S. Department of Defense. The commercial standards reviewed were IEEE Std C62.41, IEEE Std C62.45, and IEC 61000-4. The MIL-STDs reviewed were MIL-STD-461E and MIL-STD-464. The confirmatory research focused on establishing the technical basis for test criteria, test methods, and operating envelopes applicable for ensuring immunity to conducted disturbances along signal lines in safety-related I&C systems. The research approach included (1) searching for reported conducted EMI/RFI and power surge events to establish the need for guidance, (2) reviewing EMI/RFI and SWC standards for their applicability to signal-line testing, (3) conducting an investigation on an experimental digital safety channel to explore the types of events that could be caused by EMI/RFI, (4) conducting an investigation to compare the MIL-STD and IEC test methods by employing a test artifact, and (5) establishing EMI/RFI and SWC operating envelopes relevant to the nuclear power plant environment.

The research resulted in findings that support two applicable standards: IEC 61000-4, *Electromagnetic Compatibility, Part 4. Test and Measurement Techniques*, and MIL-STD-461E, *DOD Interface Standard Requirements for the Control of Electromagnetic Interference Characteristics of Subsystems and Equipment*. Five sets of test criteria and test methods from IEC 61000-4 (IEC 61000-4-4, *Electrical Fast Transient/Burst Immunity Test*; IEC 61000-4-5, *Surge Immunity Test*; IEC 61000-4-6, *Immunity to Conducted Disturbances, Induced by Radio-Frequency Fields;* IEC 61000-4-12, *Oscillatory Waves Immunity Test*; and IEC 61000-4-16, *Test for Immunity to Conducted, Common Mode Disturbances in the Frequency Range 0 Hz to 150 Hz*) and three corresponding sets from MIL-STD-461E (CS114, *Conducted Susceptibility, Bulk Cable Injection, 10 kHz to 400 MHz*; CS115, *Conducted Susceptibility, Bulk Cable Injection, Impulse Excitation*; and CS116, *Conducted Susceptibility, Damped Sinusoidal Transients, Cables and Power Leads, 10 kHz to 100 MHz*) were found to specifically address interconnecting signal lines and are applicable. Operating envelopes are also recommended that are applicable to the nuclear power plant environment.

ACKNOWLEDGMENTS

The authors wish to thank Christina Antonescu, JCN W6960 Project Manager, of the U.S. NRC Office of Nuclear Regulatory Research (RES) for her help in initiating, planning, and implementing this research effort. The authors would also like to thank John Calvert of the U.S. NRC RES for his assistance and support during the research effort.

ACRONYMS

A/D	analog-to-digital
ADC	analog-to-digital converter
ALWR	advanced light-water reactor
AM	Artifact Module
ANSI	American National Standards Institute
CDN	coupling/decoupling network
CENELEC	Comite European de Normalisation Electrotechnique (European Committee for Electrotechnical Standardization)
CMOS	complementary metal-oxide semiconductor
CR	control register
CS	conducted susceptibility
CW	continuous wave
D/A	digital-to-analog
DAC	digital-to-analog converter
DoD	Department of Defense
DTC	digital trip computer
EDSC	experimental digital safety channel
EFT	electrical fast transient
EFT/B	electrically fast transient/burst
EM	electromagnetic
EMC	electromagnetic compatibility
EMI	electromagnetic interference
EN	European Norm
ESF	engineered safety feature
ESF/MUX	engineered safety feature actuation unit
EUT	equipment under test
FDDI	fiber distributed data interchange
G-M	Geiger-Müller
HEMP	high-altitude electromagnetic pulse
HOSTP	host processor
HV	high voltage
I&C	instrumentation and control
IEC	International Electrotechnical Commission
IEEE	Institute of Electrical and Electronics Engineers
IM	Interface Module
I/O	input/output
LER	Licensee Event Report
LISN	line impedance stabilization network
LUT	line under test
MC	monitoring computer
MIL-STD	military standard
MV	medium voltage
NAND	not-AND digital gate
NPP	nuclear power plant
NRC	U.S. Nuclear Regulatory Commission
ORNL	Oak Ridge National Laboratory
PC	personal computer
PCB	printed circuit board
PRS/MUX	process multiplexing unit

RAM	random access memory
RES	Office of Nuclear Regulatory Research
RF	radio frequency
RFI	radio-frequency interference
RS	radiated susceptibility
SG	signal generator
SWC	surge withstand capability
TCP	transmission control protocol

GLOSSARY

A	ampere, unit of current
ac	alternating current
cm	centimeter, unit of length
dB	decibel—ten times the logarithm to base 10 of a ratio of two powers, or twenty times the logarithm to base 10 of a ratio of two voltages or currents
dBμA	decibels referenced to one microampere, unit of conducted interference
dBμV	decibels referenced to one microvolt, unit of conducted interference
dBμV/m	decibels referenced to one microvolt per meter, unit of electric field strength
dc	direct current
e	2.718
f	frequency
GHz	Gigahertz—10^9 Hertz
HI	high state
Hz	Hertz—unit of frequency, one cycle per second
I(t)	instantaneous current at time t
I_{MAX}	maximum current
I_N	peak current at N^{th} cycle
I_p	peak current
kA	kiloamperes —10^3 A, unit of current
kHz	kilohertz—10^3 Hz
kV	kilovolt—10^3 V, unit of voltage
ln	natural log
λ	lambda, wavelength
LO	low state
m	meter, unit of length
MHz	Megahertz—10^6 Hz
μs	microsecond—10^{-6} s
ms	millisecond—10^{-3} s
mV	millivolt—10^{-3} V, unit of voltage
N	cycle number (i.e., N=2,3,4,5,...)
ns	nanosecond—10^{-9} s
Ω	Ohm, unit of resistance
π	Pi, 3.414
pps	pulses per second
rms	root mean square—square root of the average square of an instantaneous magnitude
Q	damping factor
Sin	trigonometric sine function
t	time
V	volt, unit of voltage
V(t)	instantaneous voltage at time t
V/m	volts per meter, unit of electric field strength
V_p	peak voltage
V_{cc}	power source voltage
V_{ref}	reference voltage
W	watt, unit of power

1 INTRODUCTION

Oak Ridge National Laboratory (ORNL) has been engaged by the U.S. Nuclear Regulatory Commission (NRC) Office of Nuclear Regulatory Research (RES) to perform confirmatory research associated with developing the technical basis for regulatory guidance to address electromagnetic interference (EMI), radio-frequency interference (RFI), and surge withstand capability (SWC) in safety-related instrumentation and control (I&C) systems. To date, ORNL staff have issued three technical reports detailing their findings and recommendations. NUREG/CR-5941, *Technical Basis for Evaluating Electromagnetic and Radio-Frequency Interference in Safety-Related I&C Systems*,[1] discusses the test criteria and associated test methods recommended for safety-related I&C systems to be installed in nuclear power plants. NUREG/CR-6436, *Survey of Ambient Electromagnetic and Radio-Frequency Levels in Nuclear Power Plants*,[2] reports on the measurement data collected at selected nuclear power plant (NPP) sites and the resulting electromagnetic emission profiles. NUREG/CR-6431, *Recommended Electromagnetic Operating Envelopes for Safety-Related I&C Systems in Nuclear Power Plants*,[3] presents recommendations for operating envelopes to augment the test criteria and test methods discussed in NUREG/CR-5941.

In the course of reviewing the confirmatory research performed to date, it was determined that an open technical issue remains for addressing the potential susceptibility of both digital and analog I&C systems to adverse effects resulting from conducted EMI/RFI and power surges on interconnecting signal lines. EMI/RFI and power surges conducted along interconnecting lines can cause erroneous or out-of-range signals that, in turn, can result in missed or spurious trips for individual channels. Thus, susceptibility to conducted disturbances poses a potential hazard that may lead to degraded or failed performance of safety-related I&C systems, thereby reducing the assurance of safety. The already recommended EMI/RFI and SWC guidance does not specifically address test criteria and test methods for evaluating conducted susceptibility along interconnecting signal lines. Hence, the intent of this research effort is to (1) search for reported conducted EMI/RFI and power surge events to establish the need for guidance, (2) review EMI/RFI and SWC standards for their applicability to signal line testing, (3) conduct an investigation on an experimental digital safety channel to explore the types of events that could be caused by EMI/RFI, (4) conduct an investigation to compare the military standard (MIL-STD) and International Electrotechnical Commission (IEC) test methods by employing a test artifact, and (5) establish EMI/RFI and SWC operating envelopes relevant to the nuclear power plant environment.

2 SEARCH OF LICENSEE EVENT REPORTS DATABASE

This section documents the results of searching the Licensee Event Reports (LERs) database for reported EMI/RFI and SWC abnormal occurrences associated mainly with interconnecting signal lines. The purpose of the investigation was to examine and analyze available information in the LER database about the frequency and degree of severity of electrical disturbance problems associated with interconnecting signal lines for I&C systems in existing nuclear power plants. Surveying the LER database covered the time period from 1980 through 1998.

2.1 Search Procedure

We began the search by selecting commonly used terms and/or keywords related to EMI/RFI disturbances and constructing queries in accordance with the LER database search rules in a manner to maximize the return of nearly all events that are in some way associated with electrical disturbances. To facilitate the analysis process of the results, it was necessary to organize the information by devising categories of events defined in terms of type of conductor, path of induction (conducted or radiated), type of component affected, and the reportable occurrence, as listed in Table 2.1. The categorizations developed for our search proved to be useful and appropriate for identifying generic problems. However, the LER

Table 2.1. LER statistical event categories

Categorization heading	Category	Description
Type of conductor	Power, signal, ground, unknown	This category determines the basic discrimination into events that were being evaluated and those that were not. Power events included the following components: inverter, breakers, and buses.
Disturbance source	Lightning, switching inductive loads, arcing, welding, walkie-talkie, electronic flash, grid transient, voltage sag from starting a large motor, equipment failure, relay actuation (arcing), cable crosstalk, etc.	The disturbance sources were generally identified in the root-cause evaluation. However, the identifications were sometimes not confirmed by bench or field tests reproducing the fault conditions. In the histograms reported, these categories are condensed into a more manageable number. The initial results obtained were analyzed using the same terminology as is used in the LER.
Disturbance propagation method	Conducted, radiated	This category identifies how the disturbance source influences the affected system. It is usually not identified in the LER. This analysis infers the coupling method by the source and affected system.
Affected component	Relay, G-M tube, integrated circuit, etc.	This category identifies the type of component as a general equipment type.
Reportable occurrence	Engineered safety features (ESFs), safety injection, reactor trip, ESF building isolation, etc.	This category establishes the system affected and the consequences. This category permits some assessment of the severity of the event and potential risks.

reporting practices for EMI/RFI events were found to be inadequate because they do not always provide sufficient information to determine the classifications of events. Reasonable efforts have been expended to define classifications based on our interpretation of the data whenever possible. But when information was inadequate for judging the category, an "unknown" category was adopted.

According to our search criteria, the database returned 389 records that are supposedly related to EMI/RFI events. The records were closely examined, and events were grouped to separate those events related to power supply (ac and dc) from those related to signal lines. Two other groups were created from this first analyzing step: "not an EMI/RFI event," and "unknown," as shown in Fig. 2.1. The "not an EMI/RFI event" group contains returned records found to be unrelated to the EMI/RFI problem (false records). For example, the keyword "EMI" used in our search procedure was found to not necessarily refer to only EMI. The unknown group was used to contain all records that lack sufficient information for categorization. This filtration process resulted in reducing the number of EMI/RFI events related to signal lines to 183.

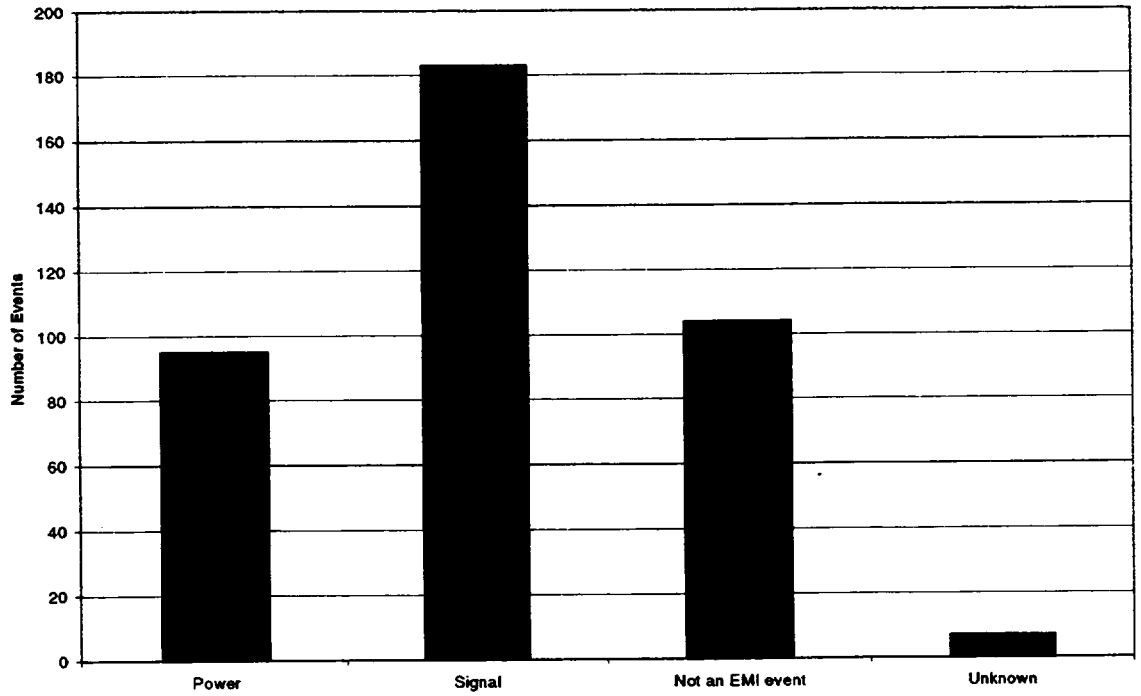

Fig. 2.1. Signal-line EMI/RFI events in the LER database.

2.2 Data Analysis

Among the 183 events, the major event type found to dominate the records was attributed to radiation monitors or airborne radiation monitors initiating placement of a building or part of it in containment. The occurrence frequency appeared to be a reflection of the sensitivity of Geiger-Müller (G-M) radiation detectors to noise and the design of the isolation system that actuates based on a single channel with no redundancy. Consequently, false alarms were easily recognized by comparison with readings from other monitors in the area by the alarm condition clearing immediately (a false alarm is triggered by a single, short-duration spike in the count rate, and the detector returns to the background count rate following the EMI/RFI event).

Figures 2.2 and 2.3 show the number of occurrences per two-year interval for non-radiation monitor and radiation monitor events, respectively. The annual trend for both events shows the sharp increase from early LER reports to the mid-80s when EMI/RFI problems were recognized. The frequency drops off dramatically as modifications were made to I&C systems, operating procedures, and/or reporting requirements. Modifications included engineering changes to reduce the sensitivity of systems to the electromagnetic environment of the nuclear plant and the source levels of EMI/RFI, and administrative control of incidences causing false alarms. Engineering design changes have included noise suppression circuits, uninterruptible power supplies, or detector systems less sensitive to EMI/RFI. In addition, the changes have also corrected maintenance problems such as improper or loose grounds or design flaws. Administrative controls included limiting the use of devices such as walkie-talkies in the vicinity of sensitive equipment, operator training to recognize the significance of EMI/RFI and take precautionary measures to reduce it, and procedures to bypass alarms when unavoidable activities that generate EMI/RFI are taking place. The changes in reporting requirements in 1994 eliminated the need to report building isolation events as LERs.

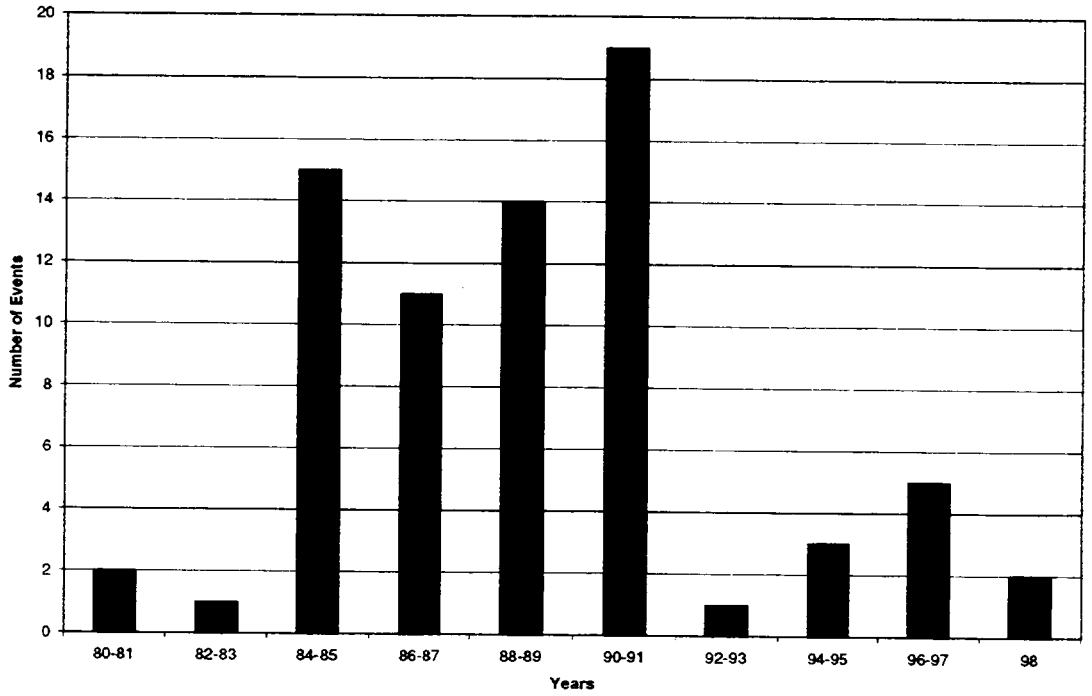

Fig. 2.2. EMI/RFI events by year (excluding radiation monitor events).

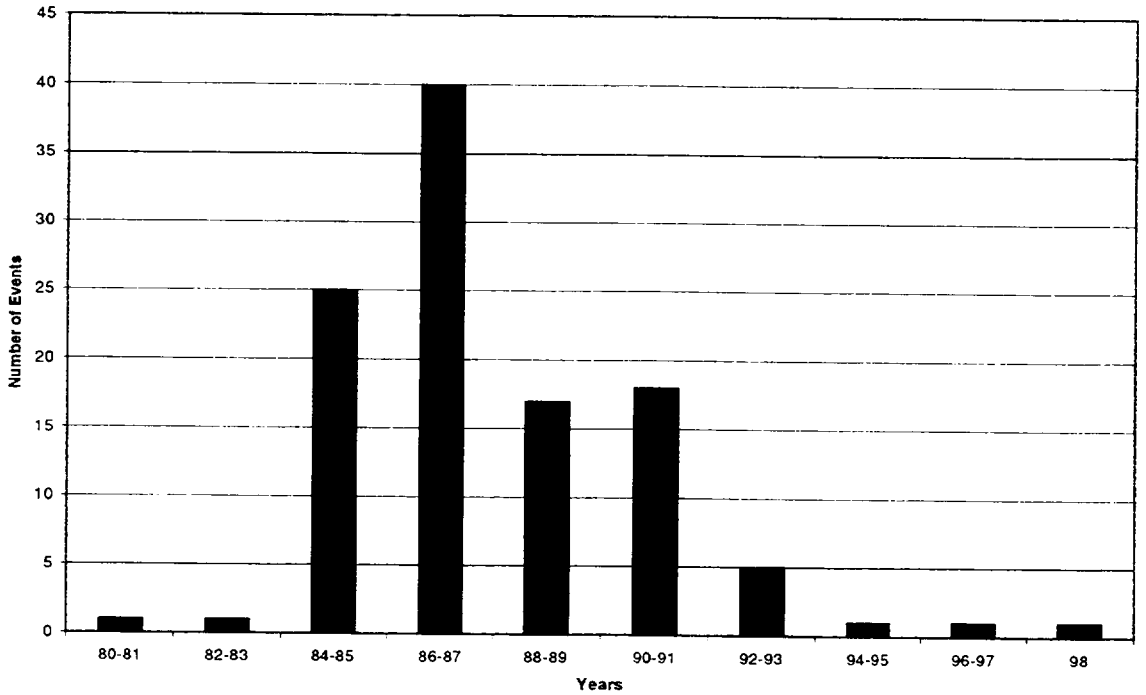

Fig. 2.3. EMI/RFI events for radiation monitors.

Figure 2.4 breaks down nonradiation monitor EMI/RFI events by the reportable occurrences. These categories provide an indication of the severity of events. The classifications are broad headings that group together the specific occurrences given in the LERs. (Note: The groupings on the histogram are defined for the purposes of this report and are not based on any previously established standard for safety significance.) The most safety-significant events are spurious reactor trips at full power and spurious actuations of safety injection systems. Note that no signal line EMI/RFI events have resulted in any major equipment damage, personnel exposure, or radiation release. All the events involve a false activation of a safety system. To the best of our ability to analyze existing LER information in its current form, no EMI/RFI problems have been found to consequently hinder the capabilities to detect an unsafe condition or to maintain normal operation. The main contributory elements to overall plant risk from EMI/RFI were (1) transients initiated by false actuations of the safety system, which consequently propagated to other systems, transferring the plant from one state to another, and (2) the amount of time the plant was allowed to operate without a safety system in service because the safety system had been declared inoperable because of an EMI/RFI event. Note that, in all instances, safety equipment was operated with significant safety consequence and operation with equipment out of service was permitted by the plant technical specifications. All NRC requirements for operation were met. Nonetheless, plant safety is compromised by the false actuation of safety equipment and by safety systems being out of service.

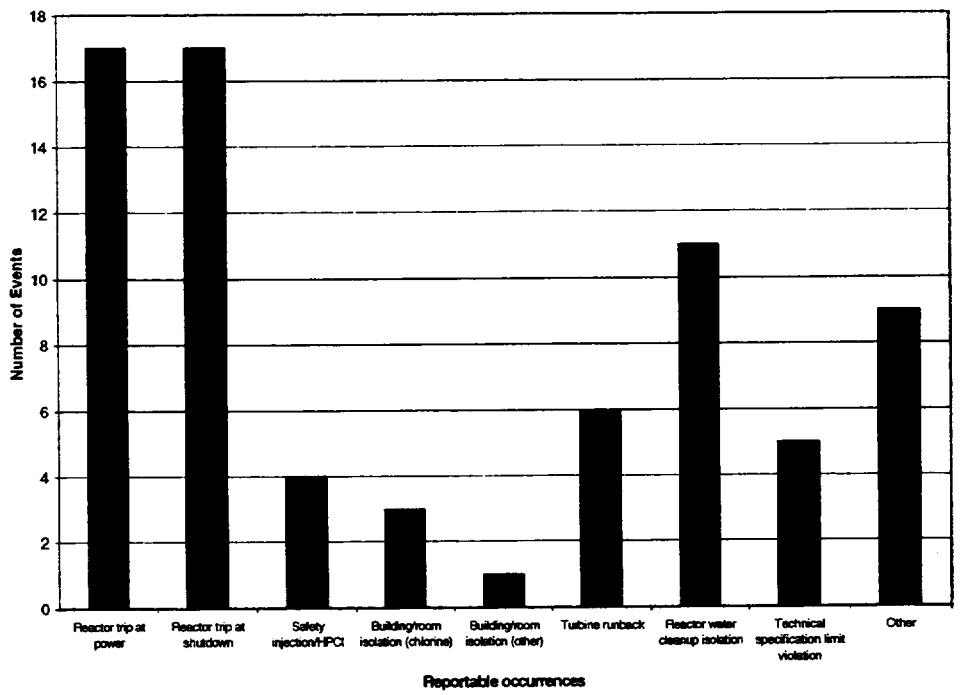

Fig. 2.4. Reportable occurrence statistics (excluding radiation monitor events).

Figure 2.5 shows the breakdown of non-radiation monitor events by the source of EMI/RFI. The "usual suspects" of EMI/RFI events appear in this figure, including portable radios (walkie-talkies), lightning, welding, and crosstalk between cables. Three other categories lump together events of a less specific nature. The arcing category includes sources such as relay contacts, selector switches, loose cables, and fuse or light-bulb replacements. The equipment failure category indicates a failure in some other system, which generated an EMI/RFI event. This category included events in which a component failure, such as a capacitor shorting to ground, generates a large current surge that is detected in a safety system. The actual EMI/RFI coupling from the equipment failure to the affected system is generally not known. The

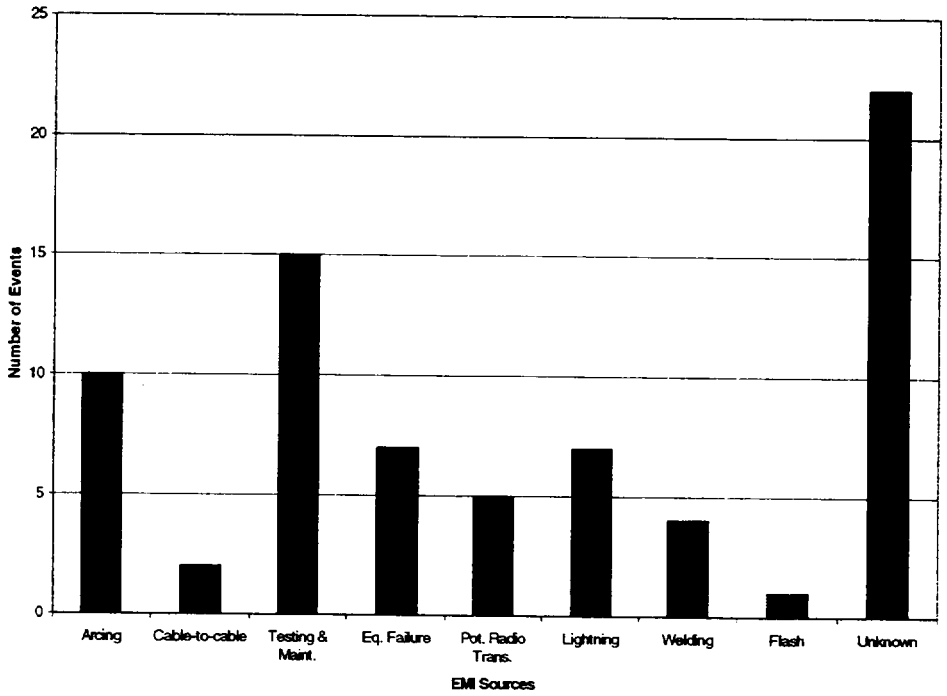

Fig. 2.5. Statistics on EMI/RFI sources (excluding radiation monitor events).

testing and maintenance category covers testing a parallel channel or equipment in the same cabinet that disturbed the affected system, while maintenance involved moving cables, bumping equipment, inserting a card, or other activities described as maintenance in the LER. In many cases, the specific EMI/RFI source or coupling was not determined.

2.3 Findings From LER Database Search

The LER root-cause analysis usually identifies a specific EMI/RFI source, as is the case for the data displayed in Fig. 2.5, and does not involve speculation on the part of the authors. However, the actual LER information may not be reliable for these data. The survey also took note of whether or not confirmatory testing of the EMI/RFI source was reported. Very few instances were reported in which the root-cause determination included testing to reproduce the source conditions either in place or with components removed for bench testing to confirm the hypothesized EMI/RFI source. When such tests were performed, one problem was that the tests failed to confirm the hypothesis, which left the LER reporter with a seemingly weaker report that no cause could be determined. Possibly as a result of the difficulty of experimental confirmation, most LER writers chose to report as the root cause a potential EMI/RFI source that was in proximity and close in time to the affected system without experimental confirmation.

The signal line EMI/RFI events were categorized as either conducted or radiated EMI/RFI. This categorization describes the path that propagates the disturbance into the affected system. Obviously, the signal conductor propagates the disturbance once it enters the system. The categories are "radiated," "conducted," and "unknown." This categorization follows from the distinction used in MIL-STD 461E for testing for conducted and radiated EMI/RFI. The source path is also useful for determining whether the EMI/RFI problem is best addressed by reducing the source amplitude, attenuating the disturbance on signal leads, or shielding the sensitive systems.

In Fig. 2.6, the statistics on the affected component show the types of devices that are sensitive to signal line EMI/RFI. The analog sensor category includes temperature, pressure, level, and flow sensors that produce a signal proportional to value. The switch sensor is also a device designed to measure physical parameters, such as pressure, temperature, flow, and level, and that is capable of providing as an output a control signal (ON/OFF or discrete levels) determined by set point adjustments instead of an analog output. Logic devices based on analog design (using linear circuitry) represent most of the discrete logic devices used in protection systems (e.g., a sensor that continuously measures pressure or temperature and that is equipped with a set point function that provides discrete levels). Logic devices, on the other hand, represent devices that implement discrete logic design, mostly in the form of integrated circuits, such as comparators and bistables on the device level and programmable logic controllers on the system level.

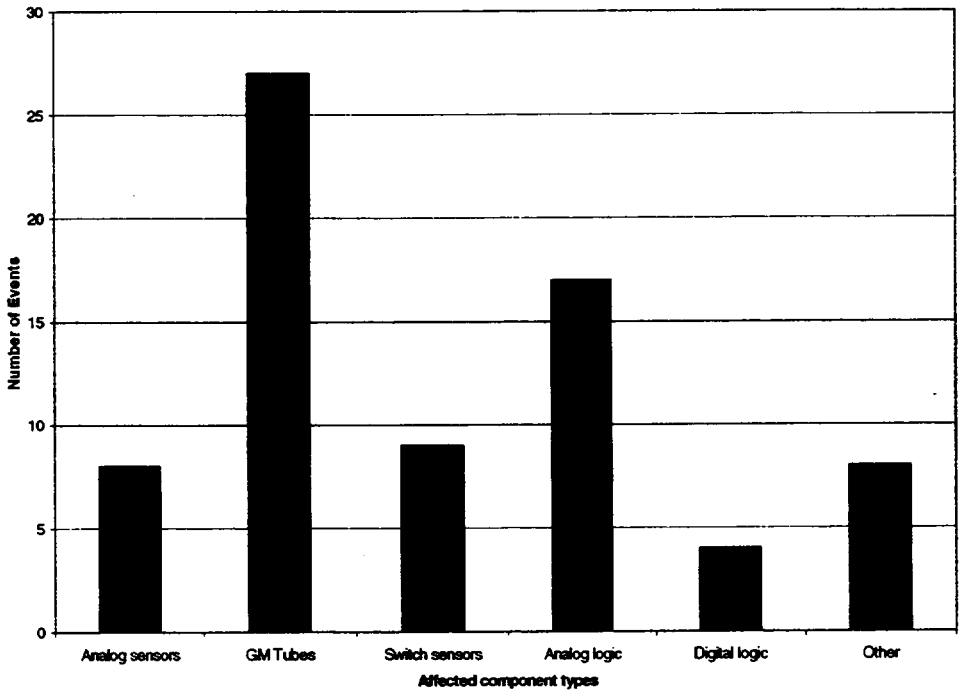

Fig. 2.6. Affected component statistics (excluding radiation monitor events).

The largest category event for affected components involves G-M radiation detectors. The 27 events shown in Fig. 2.6 involve nuclear instrumentation (power and intermediate and source range detectors). In addition to these events, the 110 events involving G-M radiation detectors used for radiation and airborne radiation monitors or habitable spaces in Fig. 2.3 can be added for a total of 137 events. The high frequency of occurrence is indicative of the sensitivity of G-M radiation detectors to EMI/RFI. The obvious conclusion, already reached by many, is that these systems need to be protected from false actuation. Techniques for using redundancy, pulse discrimination, surge suppression, and shielding have been applied to the systems. Administrative controls to prevent noise sources from being in proximity to the detectors, procedure changes to bypass alarms when the protection function is not needed while a noise source is present, and changes in LER reporting practices have significantly reduced the frequency of these problems.

The other statistic of significance in Fig. 2.6 is the category for digital logic devices. Integrated circuits (digital devices) have been introduced gradually into the nuclear power plant. Because of their small size and sharp corners in conducting paths, integrated circuits are inherently sensitive to damage from

relatively low-energy EMI/RFI. For example, electrostatic discharge from clothing or friction can damage integrated circuits. Digital devices also have transient failure modes in which the processor locks up and the device fails to perform its function until it is reset and the processor's control program is restarted. Because of the lower susceptibility to EMI/RFI, one concern about the replacement of analog devices and systems with digital counterparts is that higher event frequencies could result. Of the five digital logic events reported, four events involved a system whose sensitivity was not adequately considered in the replacement specification. The events indicate a need to incorporate electromagnetic compatibility (EMC) guidelines in the functional requirements for digital upgrades.

Common-cause events are so called because a single source is responsible for more than one alarm or safety actuation. Generally, risk assessments treat failure events in different systems as random, independent events such that the probability of simultaneous occurrences is the product of the probabilities of the individual events [e.g., if **A1, A2 . . . An** are independent events with probabilities **P(A1), P(A2) . . . P(An)**, then the probability of simultaneous occurrences of these events is given by the product **P(A) = P(A1)P(A2) . . . P(An)**]. Correlated events change that assumption and can have a much higher frequency of occurrence. We identified the events in which multiple alarms occurred based on a single EMI/RFI source (not as the consequence of some other failure) and found two such events, both caused by lightning. The path for conducting the disturbance into the systems was probably the instrumentation ground rather than signal lines. Grounding events are covered by separate regulatory guidance. We did not find any other occurrences of multiple failures for signal line EMI/RFI.

From the statistics deduced from the LER database, it is clear that signal line EMI/RFI is a potential problem that cannot be ignored and that should be adequately addressed. Based on available LER information so far, statistics on the several reportable occurrences indicate that EMI/RFI is not a problem with high safety significance. The main concerns are the number of false actuations and declaring equipment as out of service because of unresolved EMI/RFI problems. Undoubtedly, many EMI/RFI problems stem from the legacy of inadequate guidelines for EMC.

In addition to the previous discussions, the process of searching the LER database and analyzing the data revealed some noteworthy observations concerning weaknesses in reporting abnormal occurrences to the LER. These observations are discussed in detail in Appendix A.

3 REVIEW OF EMI/RFI AND SWC STANDARDS

To date, both military standards and industrial standards have been recommended for endorsement in guidance on EMI/RFI and SWC in safety-related I&C systems.[1,3] Military standards have been recommended as the basis for continuous wave (CW) EMI/RFI test and evaluation guidance. Industry standards developed by the Institute of Electrical and Electronics Engineers (IEEE) have been recommended as the basis for guidance associated with SWC test and evaluation. A review of these standards and their applicability to interconnecting signal lines are discussed herein. Also discussed are additional standards found to have some relevance to the conducted susceptibility of interconnecting signal lines. These include standards issued by the U.S. Department of Defense (DoD), the International Electrotechnical Commission (IEC), and the European Committee for Electrotechnical Standardization (CENELEC).

3.1 IEEE Std C62.41 and IEEE Std C62.45

The SWC practices described in IEEE Std C62.41-1991 (Reaff 1995), *IEEE Recommended Practice on Surge Voltages in Low-Voltage AC Power Circuits,*[4] have been recommended to control the occurrence of upsets in safety-related I&C equipment caused by power surges originating from two major sources: lightning effects (direct or indirect) and switching transients. It has been acknowledged in IEEE Std

C62.41-1991 that although the waveforms described cannot completely include all possible complex, real-world surge environments, they nonetheless define a manageable and realistic set of surge waveforms selected to represent real-world conditions. Test procedures for the IEEE Std C62.41-1991 practices are described in IEEE Std C62.45-1992, *IEEE Guide on Surge Testing for Equipment Connected to Low-Voltage AC Power Circuits.*[5]

As discussed in NUREG/CR-5941, the typical environmental surge conditions in a nuclear power plant can be represented by three of the waveforms discussed in IEEE Std C62.41-1991: the ring wave, the combination wave, and electrical fast transients (EFTs). These waveforms were developed from industrial data collected on power surges caused by lightning effects (direct or indirect) and system switching transients. Descriptions of the waveforms are given in Table 3.1.

Table 3.1. Representative power surge waveforms

Parameter	Ring wave	Combination wave		EFT
Waveform	Open-circuit voltage	Open-circuit voltage	Short-circuit current	Pulses in 15-ms bursts
Rise time	0.5 μs	1.2 μs	8 μs	5 ns
Duration	100 kHz ringing	50 μs	20 μs	50 ns

The practices in IEEE Std C62.41-1991 and IEEE Std C62.45-1992 are well suited for assessing the impact of transients on power leads. However, these practices were not intended for evaluating the conducted susceptibility of interconnecting signal lines. Hence, they provide no guidance on transient test methodologies or acceptable operating envelopes for signal lines in safety-related I&C systems.

3.2 MIL-STD-461E

MIL-STD-461E, *DOD Interface Standard Requirements for the Control of Electromagnetic Interference Characteristics of Subsystems and Equipment,*[6] was issued on August 20, 1999, and supersedes MIL-STD 461D[7] and MIL-STD 462D.[8] It consolidates the two "D"-version documents into a single standard. The purpose of MIL-STD 461E is to establish the interface and associated verification requirements necessary for controlling the EMI/RFI characteristics of electronic and electrical equipment and subsystems. The document is concerned only with specifying technical requirements for controlling EMI/RFI (emissions and susceptibility) at the subsystem and equipment level. Because of its comprehensive nature and the fact that the military services regularly incorporate advanced I&C systems into their hardware, this MIL-STD can be applied to interconnecting signal lines in safety-related I&C systems. A detailed summary of the development of MIL-STD-461 and MIL-STD-462 is provided in NUREG/CR-5941.[1]

The applicable test criteria from MIL-STD-461E for evaluating the susceptibility of equipment to conducted EMI/RFI are listed in Table 3.2. The test criteria are designated by alphanumeric codes: the first character declares the criterion to be conducted (C), the second character specifies that it covers susceptibility (S), and the third character is a unique number specific to a particular test criterion. Three of the four test criteria in Table 3.2 (CS114, CS115, and CS116) actually address interconnecting cables (which include signal lines) in their application description. The CS115 test criterion (bulk cable injection and impulse excitation) and the CS116 test criterion (damped sinusoidal transients, cables and power leads, and 10 kHz to 100 MHz) overlap with the SWC test criteria discussed in Sect. 3.1. The conducted susceptibility test criteria for MIL-STD-461C, on the other hand, were found to be applicable to signal lines only under special circumstances. Therefore, MIL-STD-461C is not appropriate for recommendation in evaluating conducted EMI/RFI in interconnecting signal lines for safety-related I&C systems in power plants.

Table 3.2. Applicable MIL-STD-461E test criteria for conducted EMI/RFI

Criterion	Description
CS101	Conducted susceptibility, power leads, 30 Hz to 50 kHz
CS114	Conducted susceptibility, bulk cable injection, 10 kHz to 200 MHz
CS115	Conducted susceptibility, bulk cable injection, impulse excitation
CS116	Conducted susceptibility, damped sinusoidal transients, cables and power leads, 10 kHz to 100 MHz

An earlier version of the standard, MIL-STD-461A, did directly address signal lines, but until MIL-STD-461D was issued, the subsequent versions dropped that application. The decision to drop the application was based on the rationale that conducted EMI/RFI would be addressed primarily by system-level EMC requirements. MIL-STD-461D was developed with the expectation that a system-level EMC standard would also be developed. That particular standard, MIL-STD-464, was issued in March 1997 and is discussed in Sect. 3.3. The "E" and "D" versions of MIL-STD-461 contain basically the same information, but with the "E" version including the test methods from MIL-STD-462D.

3.3 MIL-STD-464

MIL-STD-464, *Electromagnetic Environmental Effects Requirements for Systems*,[9] was developed by the U.S. DoD to establish interface requirements and verification criteria for airborne, sea, space, and ground systems. The standard is intended to provide a high degree of confidence that the performance requirements of military systems are met before deployment into their intended electromagnetic environments. Requirements are defined for intrasystem EMC, intersystem EMC, power line transients, and lightning effects. Compliance is verified by system-level, subsystem-level, equipment-level testing, and analysis, or a combination thereof.

The military services primarily treat conducted EMI/RFI along interconnecting signal lines as a system-level issue. Equipment- and subsystem-level tests must be completed before system-level testing to provide a baseline of performance and to identify any potential system-level problem areas. System-level testing is typically performed on a limited basis only because of the complexity involved in testing large platforms and is used primarily for verification. The coupling mechanisms for conducted susceptibility are capacitive coupling from radiated EMI/RFI and inductive cross-coupling of conducted EMI/RFI between cables (leads). The coupling of EMI/RFI into a system occurs in a real-world manner during the course of system-level testing, and the testing is a close emulation of how EMI/RFI interacts within a system.

At first glance, MIL-STD-464 appears to be a possible match for applicability to conducted susceptibility on interconnecting signal lines. The standard provides guidance on methodologies to ensure system-level compatibility and electromagnetic operating envelopes for military environments thought to be similar to the nuclear power plant environment (i.e., military ground facilities). Those operating envelopes specific to intrasystem EMC and intersystem EMC could be modified accordingly for the projected electromagnetic environment in nuclear power plants. However, the reality of performing complex system-level testing on large systems may also have to be considered. For example, the radiated EMI/RFI testing most desirable for simulating real-world conditions may have to be replaced with a smaller-scale EMI/RFI test because of practical considerations. The following observations, however, limit this standard's applicability to interconnecting signal lines: (1) high-level guidance gives no specific test criteria and (2) the installation test poses problems of potential disturbances and undesired effects on adjacent equipment. Therefore, this standard is not viewed as applicable to interconnecting signal lines associated with safety-related I&C systems in nuclear power plants environments.

3.4 IEC 61000-4

IEC 61000-4, *Electromagnetic Compatibility, Part 4, Testing and Measurement Techniques,* consists of a generic series of 21 tests developed to address upsets and malfunctions in electrical and electronic devices. In this case, the term "generic" means that it is applicable to all electrical and electronic equipment. A listing of the IEC 61000-4 tests is shown in Table 3.3 and IEC 61000-4-1[10] provides an overview of the individual tests. The applicable tests for evaluating the susceptibility of equipment to conducted EMI/RFI and power surges are those related to electrically fast transients and bursts (IEC 61000-4-4[11]), power surges from switching and lightning transients (IEC 61000-4-5[12]), conducted EMI/RFI coupled into equipment (IEC 61000-4-6[13]), oscillatory transients (IEC 61000-4-12[14]), and common mode conducted disturbances (IEC 61000-4-16[15]). If these test criteria are expected to be applied in the nuclear power plant environment, a technical basis needs to be established for appropriate operating envelopes.

Table 3.3. IEC 61000-4 immunity test methods

Designation	Description
IEC 61000-4-1	Overview of Immunity Tests
IEC 61000-4-2	Electrostatic Discharge Immunity Test
IEC 61000-4-3	Radiated, Radio-Frequency, Electromagnetic Field Immunity Test
IEC 61000-4-4	Electrical Fast Transient/Burst Immunity Test
IEC 61000-4-5	Surge Immunity Test
IEC 61000-4-6	Immunity to Conducted Disturbances, Induced by Radio-Frequency Fields
IEC 61000-4-7	General Guide on Harmonics and Interharmonics Measurements and Instrumentation, for Power Supply Systems and Equipment Connected Thereto
IEC 61000-4-8	Power Frequency Magnetic Field Immunity Test
IEC 61000-4-9	Pulse Magnetic Field Immunity Test
IEC 61000-4-10	Damped Oscillatory Magnetic Field Immunity Test
IEC 61000-4-11	Voltage Dips, Short Interruptions, and Voltage Variations Immunity Tests
IEC 61000-4-12	Oscillatory Waves Immunity Tests
IEC 61000-4-13	Immunity to Harmonics and Interharmonics
IEC 61000-4-14	Voltage Fluctuation Immunity Test
IEC 61000-4-16	Test for Immunity to Conducted, Common Mode Disturbances in the Frequency Range 0 Hz to 150 kHz
IEC 61000-4-17	Ripple on dc Input Power Immunity Test
IEC 61000-4-23	Test Methods for Protective Devices for High-Altitude Electromagnetic Pulse (HEMP) and Other Radiated Disturbances
IEC 61000-4-24	Test Methods for Protective Devices for HEMP Conducted Disturbance
IEC 61000-4-27	Unbalance Immunity Test
IEC 61000-4-28	Variation of Power Frequency, Immunity Test
IEC 61000-4-29	Voltage Dips, Short Interruptions and Voltage Variations on dc Input Power Port Immunity Tests

3.5 Findings from Review of Standards

The review of the military and commercial standards shows that most of these standards are not applicable to testing electronic and electrical systems for their susceptibility to conducted EMI/RFI and power surges along interconnecting signal lines. Only three of the standards are deemed qualified, mainly because of their specific treatment of issues directly related to conducted susceptibility of interconnected signal lines. The disqualification of the other standards is based primarily on their explicit nonapplicability to conducted susceptibility for signal lines, their inadequacy in dealing with conducted

susceptibility issues, or uncertainties concerning their approval status by the corresponding controlling body.

The standards recommended by ORNL staff are MIL-STD-461E, adopted by the U.S. DoD, and IEC 61000-4, adopted by CENELEC. The three applicable test criteria from MIL-STD-461E addressing conducted susceptibility for signal lines (CS114, CS115, and CS116) are listed in Table 3.4. The five applicable test criteria and methodologies from IEC 61000-4 (61000-4-4, 61000-4-5, 61000-4-6, 61000-4-12, and 61000-4-16) are listed in Table 3.5. The CS114 method is similar to IEC 61000-4-6 in that they both address the same issues related to conducted radio frequency (RF) disturbances but cover different frequency ranges. CS114 is applicable for frequencies from 10 kHz to 200 MHz, whereas IEC 61000-4-6 covers frequencies from 150 kHz to 80 MHz. CS115 and CS116 are thought to be similar to IEC 61000-4-4, IEC 61000-4-5, IEC 61000-4-12, and IEC 61000-4-16 in that they all address issues related to low-frequency immunity.

Table 3.4. Applicable MIL-STD-461E test criteria for signal-line testing

Designation	Description
CS114	Conducted susceptibility, bulk cable injection, 10 kHz to 200 MHz
CS115	Conducted susceptibility, bulk cable injection, impulse excitation
CS116	Conducted susceptibility, damped sinusoidal transients, cables and power leads, 10 kHz to 100 MHz

Table 3.5. Applicable IEC 61000-4 test criteria for signal-line testing

Designation	Description
IEC 61000-4-4	Electrical Fast Transient/Burst Immunity Test
IEC 61000-4-5	Surge Immunity Test
IEC 61000-4-6	Immunity to Conducted Disturbances, Induced by Radio-Frequency Fields, 9 kHz to 80 MHz
IEC 61000-4-12	Oscillatory Waves Immunity Test
IEC 61000-4-16	Test for Immunity to Conducted, Common Mode Disturbances in the Frequency Range 0 Hz to 150 kHz

The European standard appears to be more detailed and provides unified test procedures in terms of specifying the test setup for various possible hardware and wiring configurations as well as specifying the required calibration and environmental test conditions (temperature, humidity, and atmospheric pressure). In addition, characteristics for the test equipment are also specified. Such details could be helpful in producing consistently repeatable results. The military standards on the other hand provide more general procedures and generic test configurations applicable to all. Also, they do not have any guidelines for the environmental conditions that need to be maintained during the performance of the tests.

The guidance on how to apply the conducted susceptibility test criteria to signal lines is quite clear in the European standard; this is not so in the military standards. As shown in Table 3.6, the MIL-STD-461E test criteria for CS114 and CS116 are applicable to all military platforms, while the CS115 criterion is applicable with limitations for surface ships and submarines. Note that all three MIL-STD-461E test criteria are applicable to ground installations for the Army, Navy, and Air Force.

Table 3.6. Applicability of recommended MIL-STDE test criteria

Equipment and subsystems installed in, on, or launched from the following platforms or installations	Requirement applicability		
	CS114	CS115	CS116
Surface ships	A[a]	L[b]	A
Submarines	A	L	A
Aircraft, Army, including flight lines	A	A	A
Aircraft, Navy	A	A	A
Aircraft, Air Force	A	A	A
Space systems, including launch vehicles	A	A	A
Ground, Army	A	A	A
Ground, Navy	A	A	A
Ground, Air Force	A	A	A

[a]A = Applicable
[b]L = Limited

4 RECOMMENDED EMI/RFI AND SWC TESTS

4.1 IEC 61000-4 Tests

The applicable IEC 61000-4 conducted susceptibility test criteria and methods (listed in Table 3.5) consist of five techniques that explicitly focus on the immunity of signal lines to conducted EMI/RFI and power surges. The IEC standard was approved by CENELEC in March 1995 and is expected to gain widespread use in the global environment as it becomes more widely accepted. In the context of IEC 61000-4, interconnecting lines include input/output (I/O) lines, communication lines, and balanced lines. Test levels are defined for the four criteria in the individual test documents and are tailored to the intended application. The technical rationale (overview) is given in IEC 61000-4-1.

4.1.1 IEC 61000-4-4, Electrical Fast Transient/Burst

The IEC 61000-4-4 test was developed to assess the performance of electrical and electronic equipment when subjected to a repetitive fast transient/burst (EFT/B) on supply, control, and signal lines. It demonstrates the immunity of equipment and systems when they are subjected to fast transient disturbances, such as those originating from switching inductive loads and relay contact bounce. An illustration of the fast transients/bursts is shown in Fig. 4.1, and the waveform for the test is shown in Fig. 4.2.

The IEC 61000-4-4 procedures describe both the criteria and detailed test methodology that must be followed, taking into account the various hardware and wiring configurations (e.g., equipment, systems, portable, fixed, shielded lines, unshielded lines, and grounding methods) and the ambient test conditions (ambient temperature, humidity, and atmospheric pressure). Included with the procedures is Annex A, "Explanatory Notes on Transient/Burst Generator and Selection of the Test Levels," to provide technical guidance on selecting a test generator with the required technical characteristics. Also, the test levels are based on the installation environment and given for the specified withstand values (envelopes). Five levels are identified: *well-protected environment, protected environment, typical industrial environment, severe industrial environment, and special environment*. Table 4.1 lists the different levels and the corresponding explanations that can be used as a guide in selecting the appropriate withstand level for the intended application.

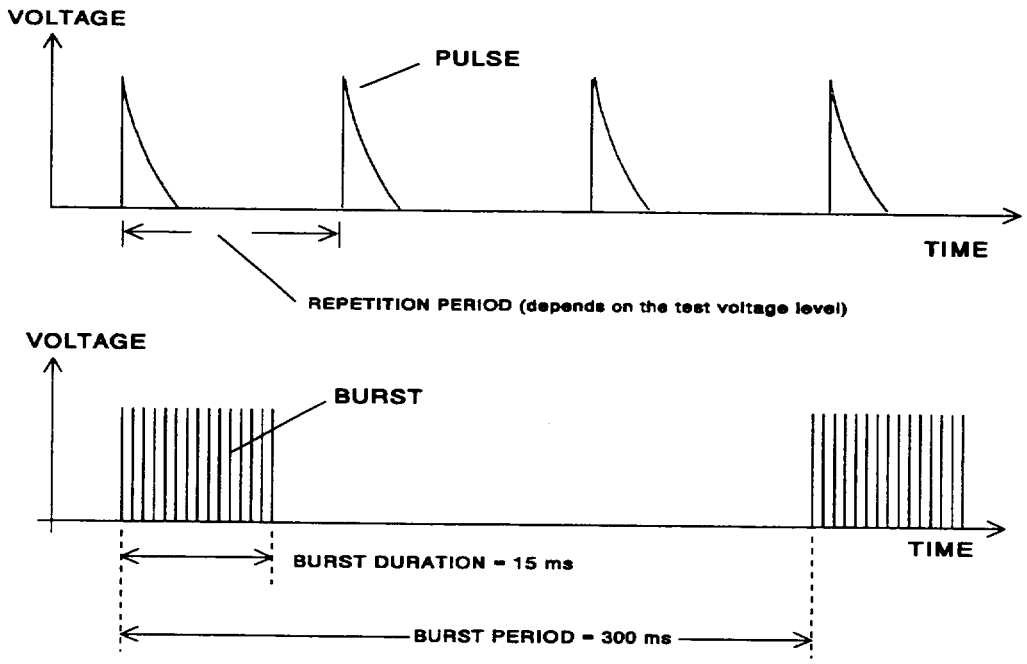

Fig. 4.1. Fast transients/bursts.

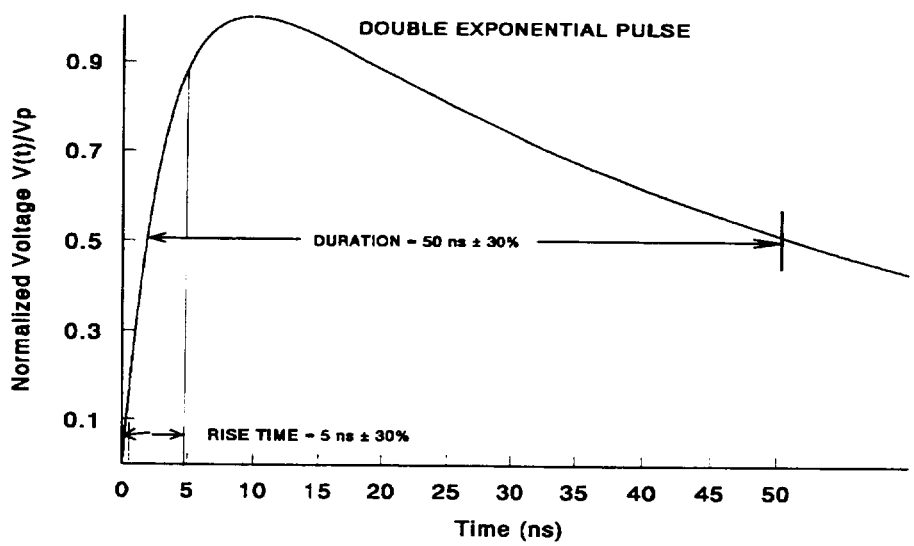

Fig. 4.2. Waveform of fast transient.

Table 4.1. Guidelines for selecting levels associated with IEC 61000-4-4

Level	Description
1	**Well-protected environment.** The installation is characterized by the following attributes: (a) suppression of all electrically fast transients/bursts (EFT/Bs) in the switched power supply and control circuits, (b) separation between power supply lines (ac and dc) and control and measurement circuits originating from other environments belonging to higher severity levels, and (c) shielded power supply cables with the shields connected to ground at both ends on the referenced ground of the installation and power supply protection by filtering.
2	**Protected environment.** The installation is characterized by the following attributes: (a) partial suppression of EFT/Bs in the power supply and control circuits, which are switched only by relays (no contactors); (b) separation of all the circuits from other circuits associated with environments of higher severity levels; and (c) physical separation of unshielded power supply and control cables from signal and communication cables.
3	**Typical industrial environment.** The installation is characterized by the following attributes: (a) no suppression of EFT/B in the power supply and control circuits, which are switched only by relays (no contactors); (b) poor separation of the circuits from other circuits associated with environments of higher severity levels; (c) dedicated cables for power supply, control, signal, and communication lines; and (d) availability of grounding system represented by conductive pipes, ground conductors in the cable trays (connected to protective ground system), and a ground mesh.
4	**Severe industrial environment.** The installation is characterized by the following attributes: (a) no suppression of EFT/B in the power supply and control and power circuits, which are switched by relays and contactors; (b) no separation of the industrial circuits from other circuits associated with environments of higher severity levels; (c) no separation between power supply, control, signal, and communication cables; and (d) use of multicore cables in common for control and signal lines.
x	**Special situations to be analyzed.**

The IEC 61000-4-4 procedures call for using a coupling/decoupling network (CDN) of the capacitive type. The networks are used to couple the disturbing transient onto the interconnecting signal lines and protect other equipment (not part of the test) against damage from possible induced transients. The withstand levels are listed in Table 4.2.

Table 4.2. Specified test levels for IEC 61000-4-4

Open-circuit output test voltage (±10%) and repetition rate of the impulses (±20%)

Level	On power supply port		On input/output signal, data, and control ports	
	Voltage peak (kV)	Repetition rate (kHz)	Voltage peak (kV)	Repetition rate (kHz)
1	0.5	5	0.25	5
2	1	5	0.5	5
3	2	5	1	5
4	4	2.5	2	5
x[a]	Special	Special	Special	Special

[a]"x" is an open level. The level can be given in the product specification.

4.1.2 IEC 61000-4-5, Surge Waves

The IEC 61000-4-5 test was developed to assess the immunity of electrical and electronic equipment to surges caused by overvoltages from switching and lightning transients coupled onto signal lines and power leads. The switching transient phenomenon is categorized into four classifications: (1) major power system switching disturbances, such as capacitor bank switching; (2) minor switching activity near instrumentation or load changes in the power distribution system; (3) resonating circuits associated with switching devices, such as thyristors; and (4) various system faults, such as short circuits and arcing faults to the grounding system of the installation. The lightning transient is classified by the mechanisms by which lightning produces surge voltages: (1) a direct lightning stroke to an external (outdoor) circuit injecting high currents that produce voltages by flowing either through ground resistance or through the impedance of the external circuit; (2) an indirect lightning stroke (stroke between or within clouds or to nearby objects, which produces electromagnetic fields) that induces voltages and currents on the conductors outside and/or inside a building; and (3) lightning ground current flow resulting from nearby direct-to-ground discharges coupling into the common ground paths of the grounding system of the installation. The open-circuit voltage and open-circuit current waveforms chosen to represent the switching and lightning transients are shown in Figs. 4.3 and 4.4, respectively.

There are two coupling mechanisms called out in the test procedures: (1) coupling via capacitive CDNs and (2) coupling via arrestors. The CDN is considered the primary coupling technique, except for two situations where coupling using arrestors is preferred. Coupling via arrestors is preferred for unshielded balanced circuits (telecommunications) and when capacitive coupling cannot be used because of functional problems caused by the CDN capacitors. In addition to the procedures, three appendices are provided (Annex A, "Selection of Generators and Test Levels"; Annex B, "Explanatory Notes"; and Annex C, "Bibliography") to provide additional information about the test setup, test equipment, and other helpful standards. The guidelines for selecting the appropriate environment are given in Table 4.3. The withstand levels are given in Table 4.4.

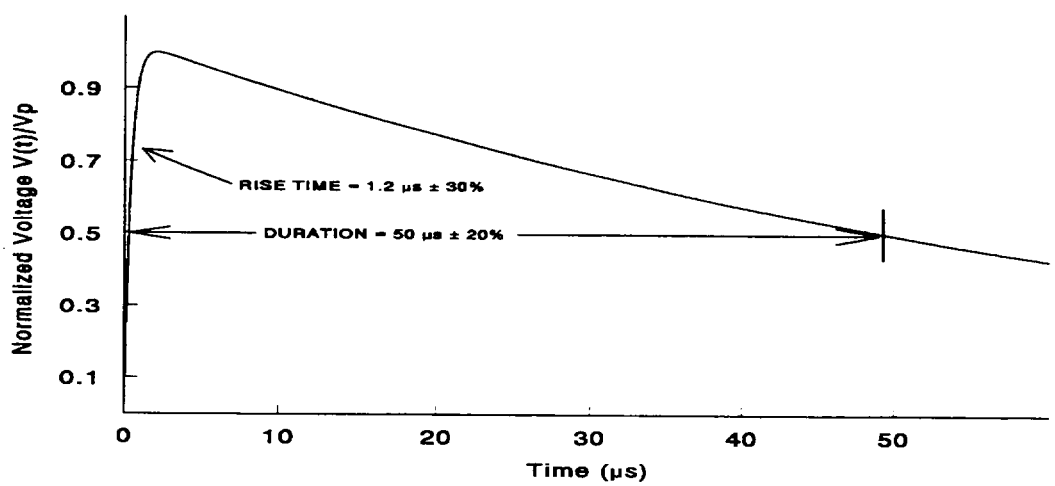

Fig. 4.3. Waveform of 1.2/50-µs open-circuit voltage.

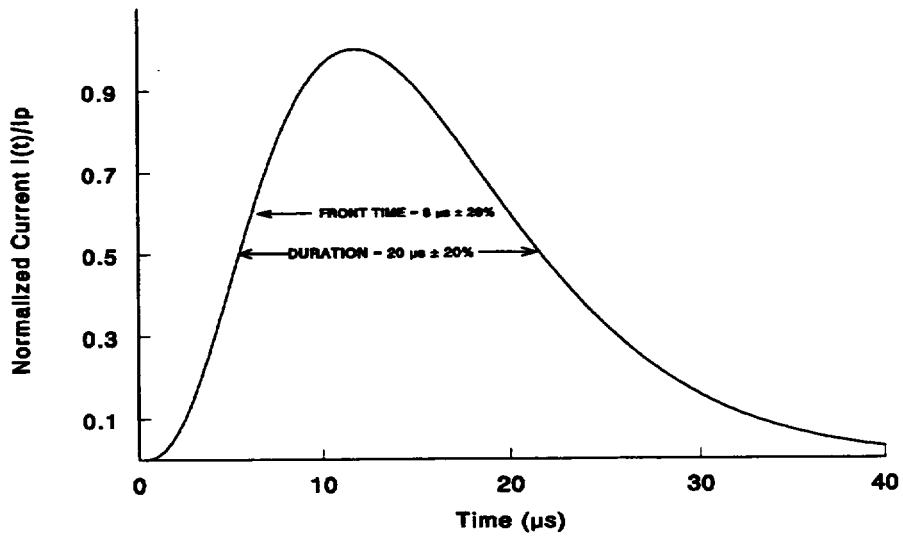

Fig. 4.4. Waveform of 8/20-µs open-circuit current.

4.1.3 IEC 61000-4-6, Immunity to Radio-Frequency Conducted Disturbances

The IEC 61000-4-6 test was developed to assess the immunity of electrical and electronic equipment to electromagnetic disturbances originating from RF transmitters in the frequency range from 150 kHz to 80 MHz along interconnecting signal lines and power leads. The main source of the disturbances is the electromagnetic fields typically radiated from intended RF transmitters that may act on the whole length of cables connected to an installed piece of equipment. The dimensions of the equipment under test (EUT) are assumed to be small compared with the wavelengths involved. All interconnecting wiring (i.e., communication lines, interface cables, and signal lines) act as passive receiving antenna networks since they can be several wavelengths long. The procedures are designed to subject the EUT to simulated disturbances composed of electromagnetic (EM) fields that approximate those fields radiated from RF transmitters found in the intended environment.

Several coupling mechanisms are covered by this procedure, depending on the EUT and associated wiring installations. The coupling mechanisms employ three types of devices: CDN, EM clamp, and current clamp. Both the EM clamp and the current clamp can be used in two different configurations. The selection rules for the coupling devices and test configurations are outlined. In addition to the test procedures, four appendices are included to provide additional information on the selection of the test setup and the required performance of the test equipment (Annex A, "Additional Information Regarding Clamp Injection"; Annex B, "Selection Criteria for the Frequency Range of Application"; Annex C, "Guide for Selecting Test Levels"; and Annex D, "Information Coupling and Decoupling Networks"). The guidelines for selecting the appropriate environment are given in Table 4.5. The withstand levels are given in Table 4.6.

Table 4.3. Guidelines for selecting levels associated with IEC 61000-4-5

Class	Description
0	**Well-protected electrical environment, often within a special room.** All incoming cables are provided with overvoltage (primary and secondary) protection. The units of the electronic equipment are interconnected by a well-designed grounding system, which is not essentially influenced by the power installation. The electronic equipment has a dedicated power supply. Surge voltage may not exceed 25 V.
1	**Partly protected electrical environment.** All incoming cables to the room are provided with overvoltage (primary) protection. The units of the equipment are well interconnected by ground line network, which is not essentially influenced by the power installation or lightning. The electronic equipment has its power supply completely separated from the other equipment. Switching operations can generate interference voltages within the room. Surge voltage may not exceed 500 V.
2	**Electrical environment where the cables are well separated, even at short runs.** The installation is grounded via a separate ground line to the grounding system of the power installation, which can be essentially subjected to interference voltages generated by the installation itself or by lightning. The power supply to the electronic equipment is separated from other circuits, mostly by a special transformer for the power supply. Nonprotected circuits are in the installation but are well separated and in restricted numbers. Surge voltages may not exceed 1 kV.
3	**Electrical environment where power and signal cables run in parallel.**
4	**Electrical environment where the interconnections are running as outdoor cables along with power cables and where cables are used for both electronic and electric circuits.**
5	**Electrical environment for electronic equipment connected to telecommunication cables and overhead power lines in non-densely populated areas.**
x	**Special conditions specified in the product specifications.**

Table 4.4. Specified test withstand levels for IEC 61000-4-5

Class	Open-circuit test voltage (kV) ±10%
1	0.5
2	1.0
3	2.0
4	4.0
x[a]	Special

[a]"x" is an open class. The test voltage level can be given in the product specification.

Table 4.5. Guidelines for selecting levels associated with IEC 61000-4-6

Class	Description
1	**Low-level electromagnetic radiation environment.** A typical example is a radio/television station located at a distance of more than 1 km that uses low-power-level transceivers.
2	**Moderate electromagnetic radiation environment.** This is a typical commercial environment where low-power portable transceivers (typically less than 1-W rating) are used but with a restriction on their use in proximity to the equipment.
3	**Severe electromagnetic radiation environment.** This is a typical example of portable transceivers (2-W or higher) being used relatively close to the equipment but at a distance not less than 1 m. High-powered broadcast transmitters in proximity of the equipment is another example.
x	**Open level (not assigned).** This may be negotiated and specified in the dedicated equipment specifications or equipment standards.

Table 4.6. Specified test withstand levels for IEC 61000-4-6

Frequency range 150 kHz to 80 MHz

Level	Voltage level	
	U_o [dB(μV)]	U_o [V]
1	120	1
2	130	3
3	140	10
x[a]	Special	

[a]"x" is an open level. The level can be given in the product specification. U_o is the specified test voltage.

4.1.4 IEC 61000-4-12, Oscillatory Waves

The IEC 61000-4-12 test was developed to assess the performance of electrical and electronic equipment when subjected to oscillatory waves occurring on power, control, and signal lines. The oscillatory waves are represented by nonrepetitive damped oscillatory transients known by the term "ring wave" and bursts of repetitive damped oscillatory transients known by the term "damped oscillatory wave." The ring wave appears as a consequence of switching in power and control lines, as well as a consequence of lightning. The damped oscillatory wave appears as a consequence of switching with restriking of the arc, typical of electrical plants and industrial installations. Figure 4.5 shows the waveform of the ring wave, and Fig. 4.6 shows the waveform of the damped oscillatory wave.

The IEC 61000-4-12 procedures call for using CDNs to apply the test signals. The single event type and the decaying oscillatory waveform are the most significant parameters of the ring wave test. The ring wave has a 0.5-μs rise time and a 100-kHz oscillation frequency. The relatively fast rise time, the decaying oscillatory waveform, the high repetition rate, and the duration of the burst are the most significant parameters of the damped oscillatory wave test. The damped oscillatory wave has a 75-ns rise

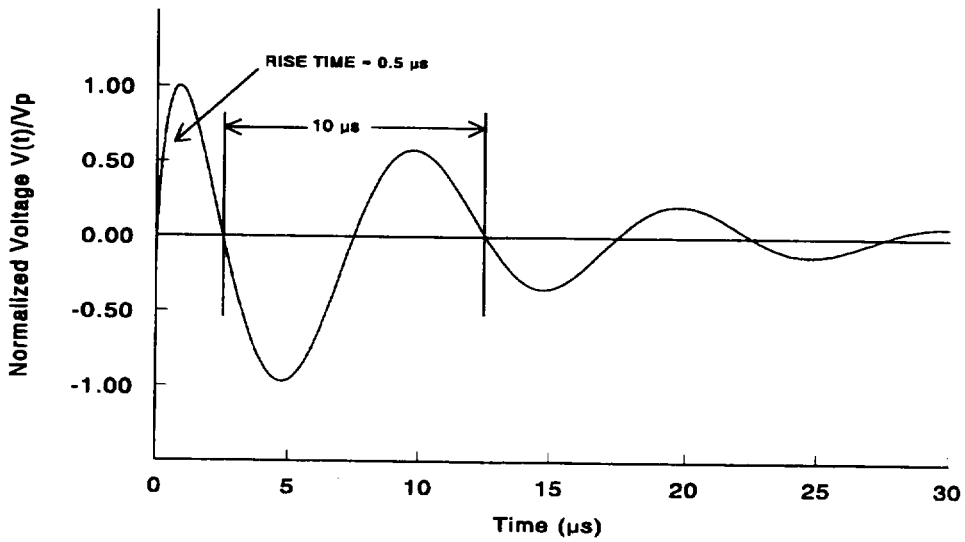

Fig. 4.5. Waveform of the ring wave.

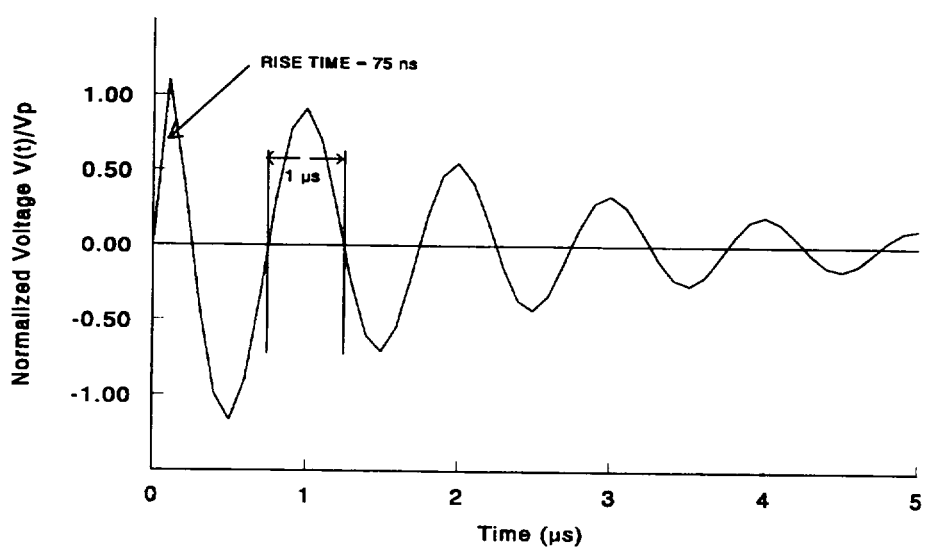

Fig. 4.6. Waveform of the damped oscillatory wave.

time, a 1-MHz oscillation frequency (typically), a 400-Hz repetition rate, and a burst duration of not less than 2 s.

In addition to the procedures, three appendices are provided (Annex A, "Information on the Phenomena, Selection of Test"; Annex B, "Selection of the Test Levels"; and Annex C, "Impedance of the Test Generators"). The guidelines for selecting the appropriate environment for the ring wave test are given in Table 4.7. The withstand levels for the ring wave test are given in Table 4.8. The guidelines for selecting the appropriate environment for the damped oscillatory wave test are given in Table 4.9. The withstand levels for the damped oscillatory wave test are given in Table 4.10. It is important to note that the withstand levels for both tests are applicable to power, control, and signal lines. However, different levels can be used for the signal and control lines, but they may not differ by more than one level from those used for power lines.

Table 4.7. Guidelines for selecting levels associated with ring wave test

Level		Description
1	**Switching:**	– power supply port connected to protected local power source (e.g., uninterruptible power system, power converter); – input/output ports connected to cables running in parallel with power cables of the class under consideration.
	Lightning:	– power supply, input/output ports of equipment in control room.
2	**Switching:**	– power supply port directly connected to mains distribution systems of residential area; – power supply port of equipment in industrial and electrical plants, decoupled from mains power distribution system through isolation transformers, protection devices, etc.; – input/output ports connected to cables running in parallel with power cables of the class under consideration.
	Lightning:	– power supply, input/output ports connected to shielded cables.
3	**Switching:**	– power supply port connected to dedicated power distribution systems in electrical and industrial plants; – input/output ports connected to cables running in parallel with the power cables of the class under consideration.
	Lightning:	– power supply port connected to undershielded cables; – power supply, input/output ports connected to outdoor cables provided with shielding provisions.
4	**Switching:**	– power supply port connected to power source characterized by heavy inductive loads in industrial or electrical plants; – input/output ports connected to cables running in parallel with the power cables of the class under consideration.
	Lightning:	– power supply, input/output ports connected to outdoor cables without shielding provisions.
X	**Special situations to be analyzed.**	

Table 4.8. Specified test levels for ring wave test

Level	Common mode (kV)
1	0.5
2	1.0
3	2.0
4	4.0
x[a]	x

[a]"x" is an open level. The level can be given in the product specification.

Table 4.9. Guidelines for selecting levels associated with damped oscillatory wave test

Level	Description
1	**Ports connected to cables running in a limited area of the control building.**
2	**Ports connected to cables of equipment in the control building and relay house.** The equipment concerned is installed in the control building and relay house.
3	**Ports connected to cables of equipment installed in the relay house.** The equipment concerned is installed in the relay house.
4	**Not applicable to equipment for use in electrical plants, particularly HV substations.** Whenever this level seems to be necessary, proper mitigation methods should be adopted.
x	**Special situations to be analyzed.**

Table 4.10. Specified test levels for damped oscillatory wave test

Level	Common mode (kV)
1	0.5
2	1.0
3	2.0
4	—
x[a]	x

[a]"x" is an open level. The level can be given in the product specification.

4.1.5 IEC 61000-4-16, Conducted, Common Mode Disturbances

The IEC 61000-4-16 test was developed to assess the performance of electrical and electronic equipment when subjected to conducted, common mode disturbances in the frequency range dc to 150 kHz on power supply, control, signal, and communication lines. It is intended to simulate conducted, common mode disturbance such as those generated by power electronic equipment and originating from power line currents and return leakage currents in the grounding system.

Several test generators are used for the tests, encompassing different characteristics. For the dc test, the test generator will consist of a dc power supply unit with a variable output voltage. In turn, a variable transformer connected to the power distribution system will be the test generator for tests at the power line frequency. A sinusoidal waveform generator will be used as the test generator for tests in the frequency range 15 Hz to 150 kHz. CDNs will be employed to apply the test voltage to the EUT and to prevent the application of the test voltage to the auxiliary test equipment. The test levels to be applied at dc and the power line frequency are shown in Tables 4.11 and 4.12. The test levels to be applied in the frequency range 15 Hz to 150 kHz are shown in Table 4.13. Table 4.14 shows the guidelines for selecting the test levels for specific environments.

Table 4.11. Test levels for continuous disturbance (dc and power line frequency)

Level	Open circuit voltage [V (rms)]
1	1
2	3
3	10
4	30
x[a]	Special

[a]"x" is an open level. The level can be given in the product specification.

Table 4.12. Test levels for short-duration disturbance (dc and power line frequency)

Level	Open circuit voltage [V (rms)]
1	10
2	30
3	100
4	300
x[a]	Special

[a]"x" is an open level. The level can be given in the product specification.

Table 4.13. Test levels for conducted disturbance, 15 Hz to 150 kHz

Profile of the test voltage (open-circuit) [V (rms)]

Level	15 Hz–150 Hz	150 Hz–1.5 kHz	1.5 kHz–15 kHz	15 kHz–150 kHz
1	1–0.1	0.1	0.1–1	1
2	3–0.3	0.3	0.3–3	3
3	10–1	1	1–10	10
4	30–3	3	3–30	30
x[a]	Special	Special	Special	Special

[a]"x" is an open level. The level can be given in the product specification.

Table 4.14. Guidelines for selecting levels associated with IEC 61000-4-16

Level	Description
1	**Well-protected environment.** The installation is characterized by the following attributes: (a) separation of the internal power supply network from the mains network (e.g., by dedicated isolation transformers) and (b) electronic equipment earthed to a dedicated earthing collector connected to the earthing system (ground network) of the installation. A computer room may be representative of this environment.
2	**Protected environment.** The installation is characterized by the following attributes: (a) direct connection to the low-voltage mains network and (b) electronic equipment earthed to the earthing system of the installation. Control room or terminal room located in a dedicated building of industrial plants and power plants may be representative of this environment.
3	**Typical industrial environment.** The installation is characterized by the following attributes: (a) direct connection to the low-voltage or medium-voltage mains network. (b) electronic equipment earthed to the earthing system of the installation (ground network), and (c) use of power converters injecting stray currents into the ground network. Industrial installations and power plants may be representative of this environment.
4	**Severe industrial environment.** The installation is characterized by the following attributes: (a) direct connection to the low voltage or medium voltage mains network, (b) electronic equipment connected to the earthing system of the installation (ground network) common to high-voltage (HV) equipment and systems, and (c) use of power converters injecting stray currents into the ground network. Open-air HV substations and the related power plant may be representative of this environment.
x	**Special situations to be analyzed.**

4.2 MIL-STD-461E

MIL-STD-461E was approved by the U.S. DoD in 1999. The MIL-STD CS114, CS115, and CS116 tests are recommended on the basis of their applicability to interconnected signal lines. The test criteria and test methods are applicable to all ground-based environments. The CS114 test is applicable without any limitations to all military platforms. The CS115 test is applicable to all military platforms, but with limited applicability to surface ships and submarines. The CS116 test is applicable to all military platforms without limitations.

4.2.1 CS114, Conducted Susceptibility, Bulk Cable Injection, 10 kHz to 200 MHz

The CS114 test criteria and corresponding test method are covered in MIL-STD-461E. The underlying principle is to assess the immunity of equipment and subsystems to conducted RF disturbances along interconnecting cables. The test criteria are tailored to the various platforms of the armed forces (aircrafts, ships, and submarines) as well as to support equipment and systems associated with ground installations. The defining factor for applicability to the various platforms is the frequency range to be covered.

The coupling mechanism for the test signal onto signal lines is based on the use of current injection probes. The injection probe is placed around the interconnecting cable, wire bundle, or individual wires interfacing with the port or connector of the EUT. The resulting test current is verified through the use of a monitor probe connected to an appropriate measurement receiver. The CS114 test setup is shown in Fig. 4.7 and the calibration setup is shown in Fig. 4.8.

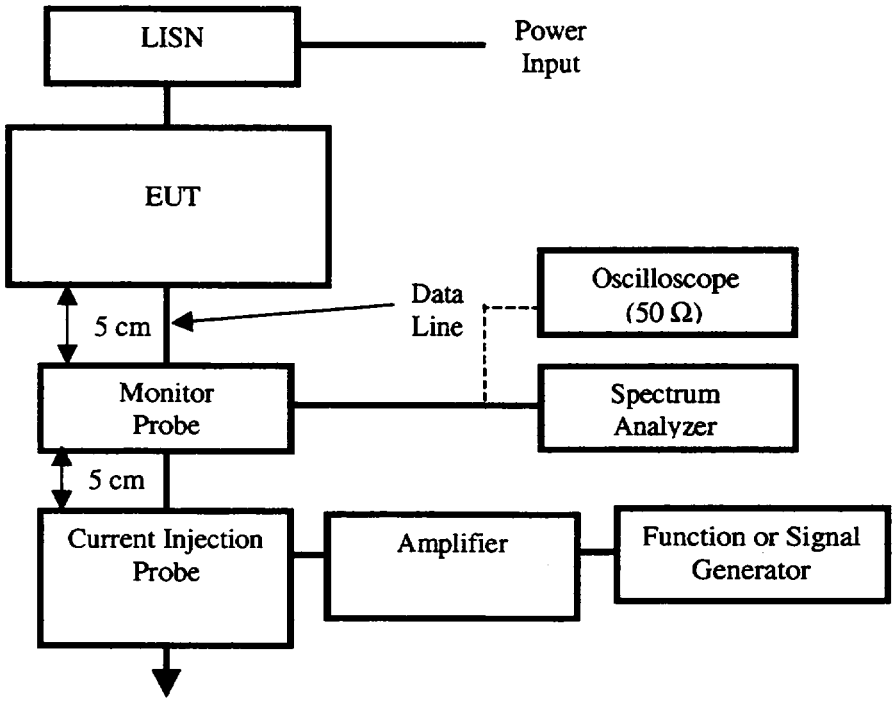

Fig. 4.7. CS114 test setup.

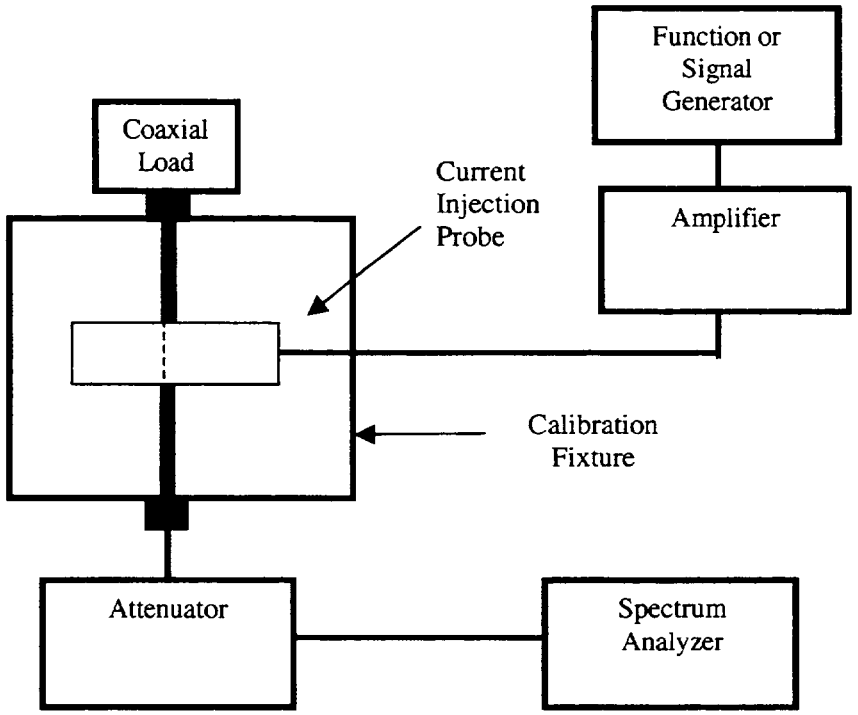

Fig. 4.8. CS114 calibration setup.

The operating envelopes for the CS114 test are derived mainly from testing conducted on aircraft that were not designed to have intentionally shielded volumes. The shape of the individual envelopes reflects the physics of the coupling mechanism with regard to resonant conditions and cable length relative to the interfering frequency wavelength. The CS114 operating envelopes are shown in Fig. 4.9, and the appropriate selection of the envelopes is outlined in Table 4.15.

4.2.2 CS115, Bulk Cable Injection, Impulse Excitation

The CS115 test criteria and corresponding test method are covered in MIL-STD-461E. The procedure is intended to evaluate the ability of the EUT to withstand impulse signals representing fast transients coupled onto the EUT through associated interconnecting cables. The CS115 test setup is shown in Fig. 4.10, and the calibration setup is shown in Fig. 4.11. The CS115 test is applicable to all aircraft, space, and ground systems. In addition, the CS115 test is applicable to surface ships and submarines equipment and subsystems when specified by the complying source. The main objective of this method is to protect equipment from fast rise and fall time transients that may be present because of internal and external switching functions from a given platform. The impact of these switching functions on the surrounding environment is the generation of electromagnetic disturbances that could assault equipment directly and indirectly. Direct effects of these disturbances can occur through coupling into internal circuitry, coupling through the ac/dc power source, or equipment enclosure. Indirect effects can occur through coupling into signal and power lines. Internal switching transients usually result from switching inductive loads and relay chattering, whereas the main external switching disturbance is lightning. The CS115 test criteria exclude switching transient emissions that result at the time of operation of manually actuated switching functions. Other transients, such as automatic sequencing following initiation by a manual switching function, are included in the criteria.

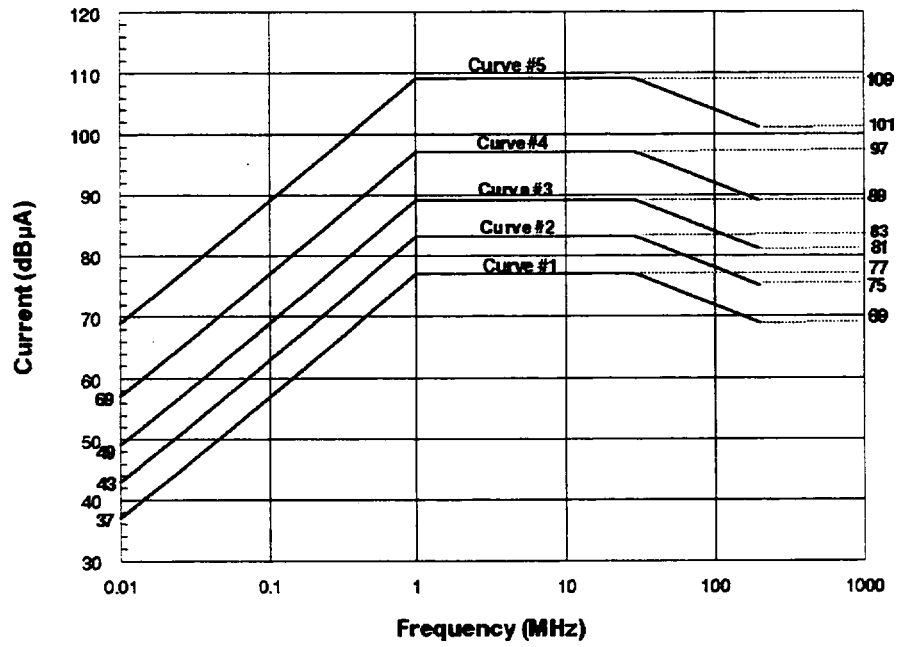

Fig. 4.9. CS114 operating envelopes.

Table 4.15. Selection criteria for CS114 operating envelopes

Frequency Range	Service Branch	Aircraft (external)	Aircraft (internal)	Ships (above deck)	Ships (below deck)	Sub-marines	Ground	Space
10 kHz	Army	5	5	2	2	1	3	3
↓	Navy	5	3	2	2	1	2	3
2 MHz	Air Force	5	3	—	—	—	2	3
2 MHz	Army	5	5	5	4	1	4	3
↓	Navy	5	5	5	4	1	2	3
30 MHz	Air Force	5	3	—	—	—	2	3
30 MHz	Army	5	5	5	2	2	4	3
↓	Navy	5	5	5	2	2	2	3
200 MHz	Air Force	5	3	—	—	—	2	3

The test waveform and envelope defined for the CS115 test are based on observed influences from system-level testing of aircraft to transient environments. The CS115 test signal is shown in Fig. 4.12. The procedure calls for a 30-Hz pulse rate. As seen in the test setup, a current injection probe is used in this procedure to couple the test signal onto the signal lines of the EUT.

4.2.3 CS116, Damped Sinusoidal Transients, Cables and Power Leads

The CS116 test criteria and corresponding test method are covered in MIL-STD-461E. The objective of the CS116 test is to evaluate the ability of equipment to withstand damped sinusoidal transients coupled

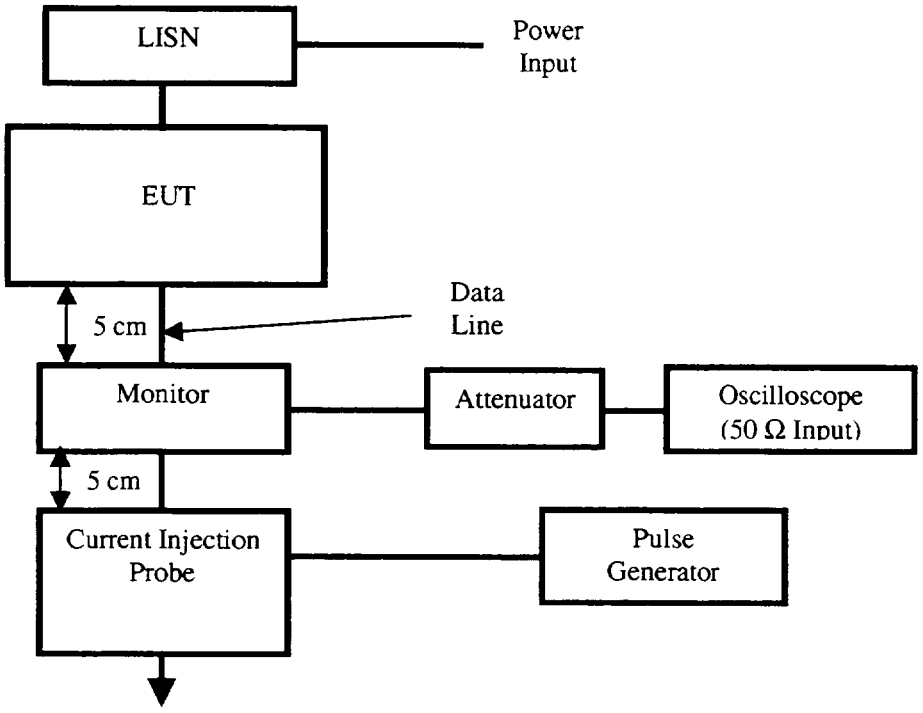

Fig. 4.10. CS115 test setup.

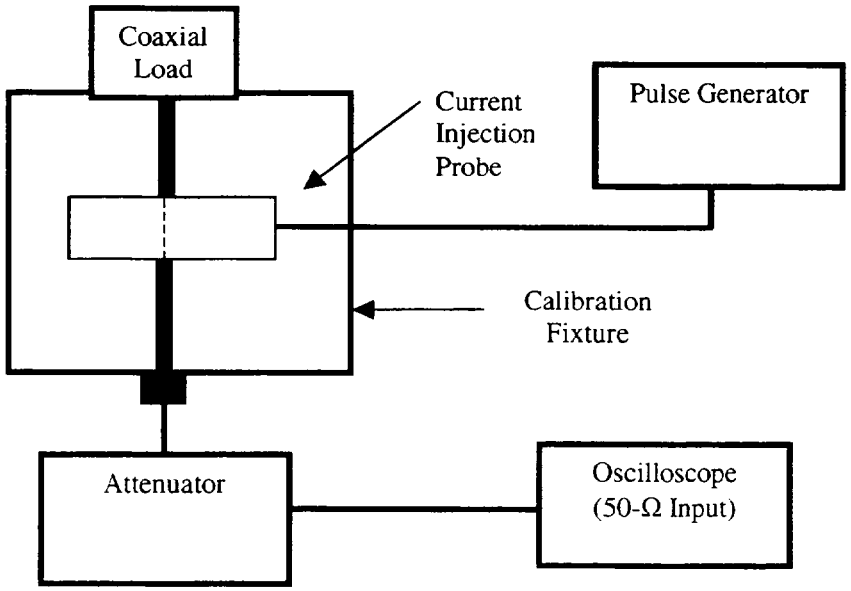

Fig. 4.11. CS115 calibration setup.

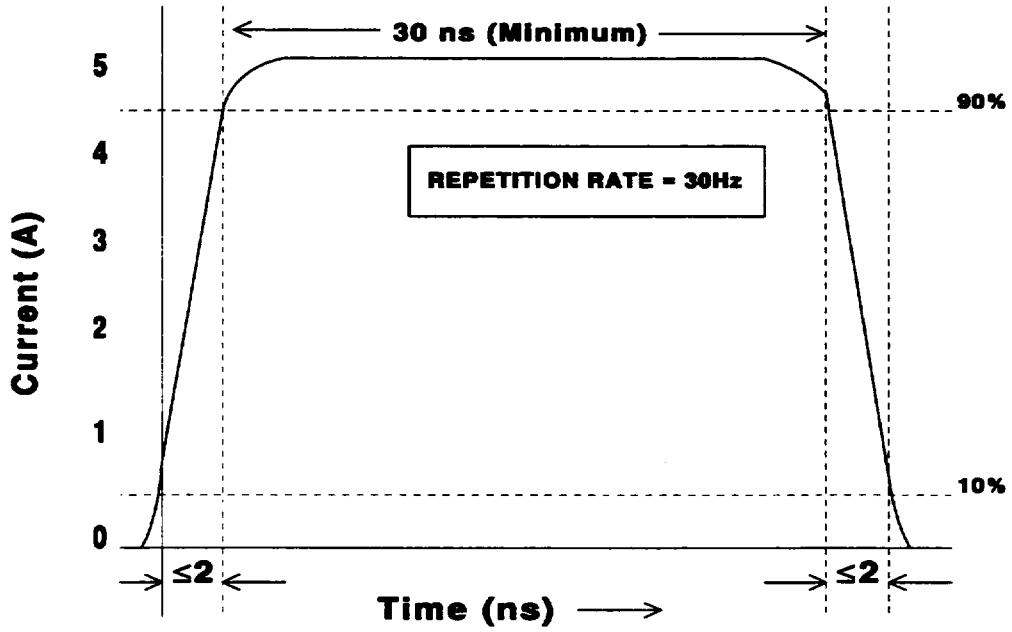

Fig. 4.12. Characteristics of CS115 test signal.

onto the associated interconnecting signal lines. The CS116 test setup is shown in Fig. 4.13, and the calibration setup is shown in Fig. 4.14. The CS116 test is applicable to all interconnecting cables, including power cables and individual power leads. The intent of the CS116 test is to ensure protection of equipment against external electromagnetic disturbances that can cause transients in the form of damped sinusoids, such as lightning and switching transients.

The test waveform and envelope defined for the CS116 test are based on observed influences of system-level testing of aircraft to transient environments. The test waveform is shown in Fig. 4.15 and the test envelope is shown in Fig. 4.16. As a minimum, compliance with this procedure is expected to be demonstrated for frequencies of 10 kHz to 100 MHz, in incremental steps (e.g., 0.01, 0.1, 1, 10, 30, and 100 MHz). A current injection probe is used in this procedure to couple the test signal onto the signal lines of the EUT.

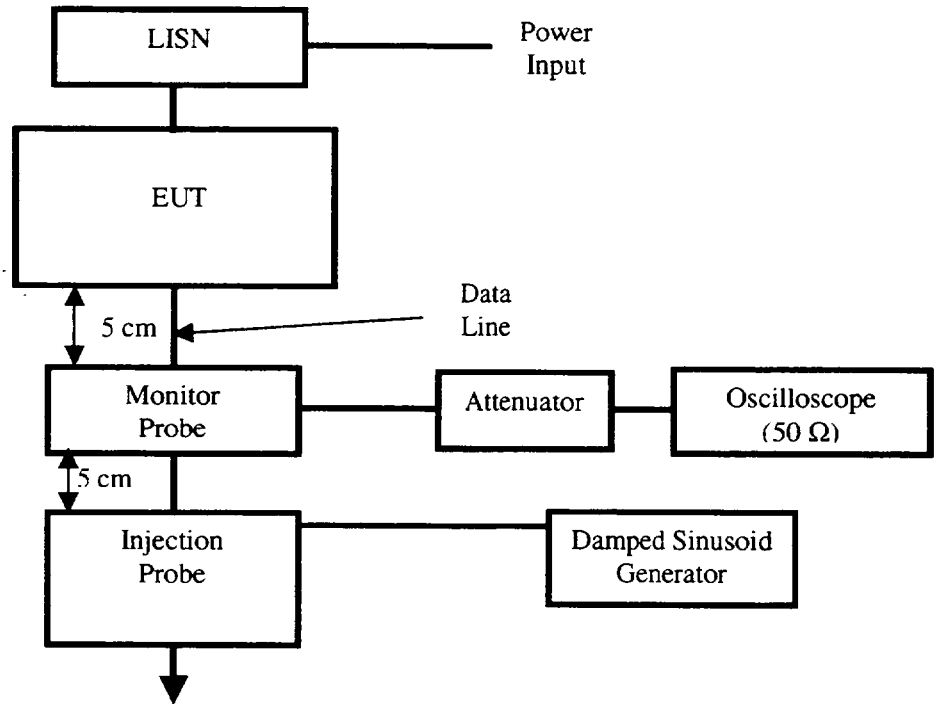

Fig. 4.13. CS116 test setup.

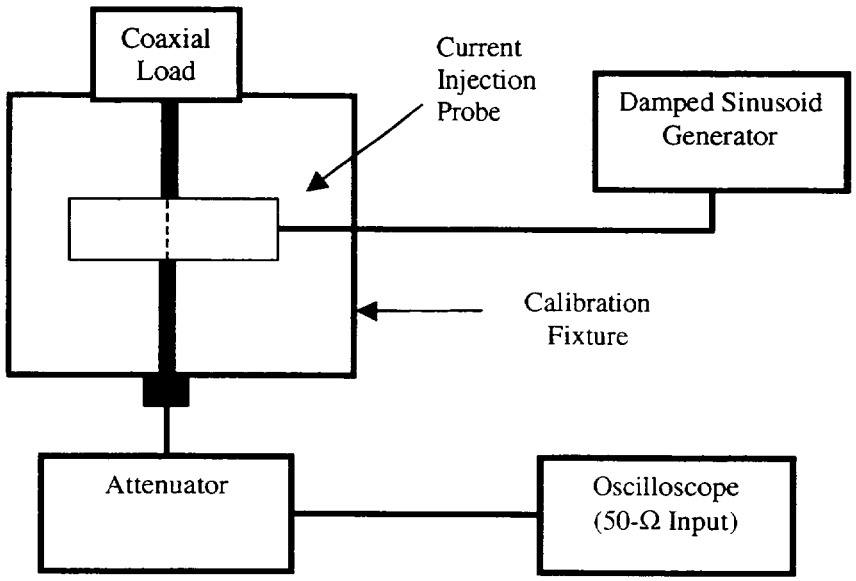

Fig. 4.14. CS116 calibration setup.

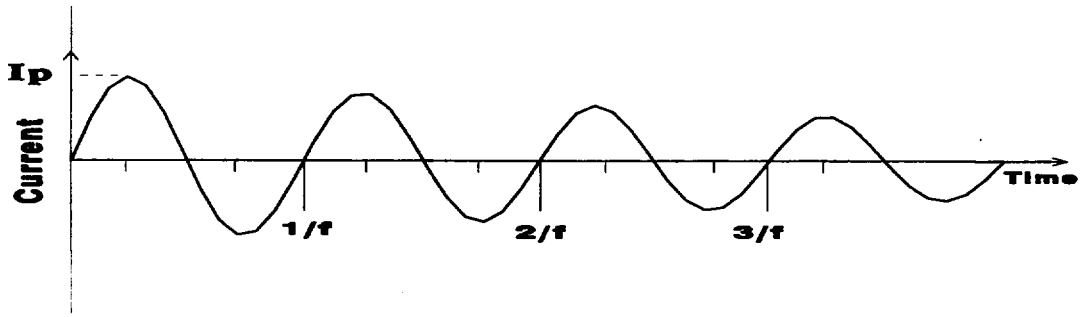

Notes: Normalized waveform: $e^{-(\pi ft)/Q}\sin(2\pi ft)$
where:
f = test frequency (Hz)
t = time (sec)
Q = damping factor, 15 ± 5
Damping factor (Q) shall be determined as follows:
$Q = \pi(N-1)/\ln(I_P/I_N)$
where
Q = damping factor
N = cycle number (i.e., N = 2, 3, 4, 5, ...)
I_P = peak current at 1st cycle
I_N = peak current at Nth cycle
ln = natural log

Fig. 4.15. Waveform of CS116 test signal.

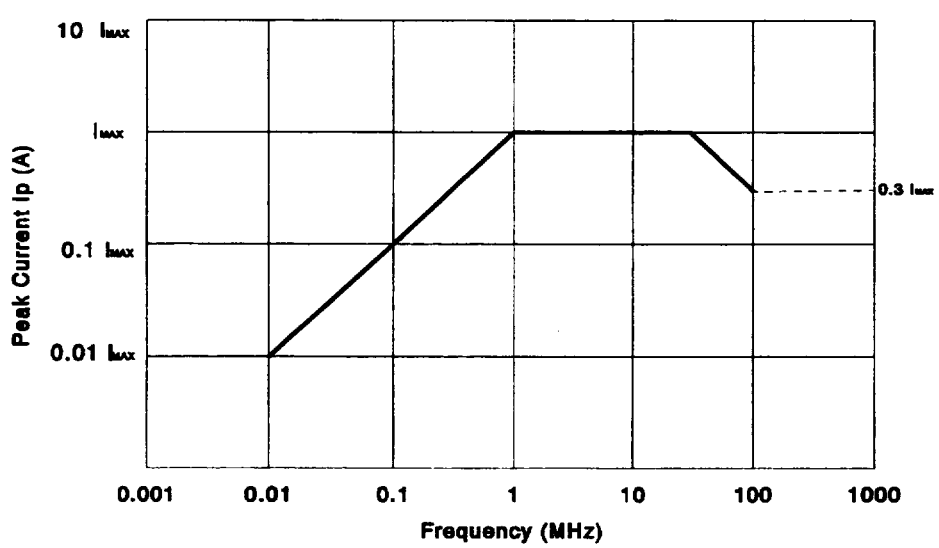

Fig. 4.16. CS116 operating envelope.

5 EXPERIMENTAL INVESTIGATION ON CONDUCTED EMI/RFI

An experimental investigation was conducted to assess the impact of conducted EMI/RFI on interconnecting signal leads. The tests were performed on an experimental digital safety channel (EDSC) assembled at ORNL as part of the NRC-sponsored Qualification of Advanced Instrumentation and Control (I&C) Systems Program. The goal of the program is to gain an understanding of the operating environment of the I&C systems proposed for use in advanced light-water reactor (ALWR) plants and of the qualification needs of those systems. The objective of the study documented in this section is to investigate the potential susceptibility of safety-related I&C systems to effects resulting from conducted EMI/RFI along interconnecting signal lines. The MIL-STD test methods were selected for the investigation because of the availability of the associated test equipment at ORNL.

5.1 Description of EDSC

The EDSC used for the tests is shown in Fig. 5.1 and is representative of advanced safety system designs proposed for ALWRs[16] with regard to (1) chip fabrication technology, (2) board fabrication technology, (3) reliability stress tests conducted on components during quality assurance procedures, (4) subsystem functions and communication protocols used, and (5) expected memory/board density of subsystems. In addition, the system design enables the potential functional behavior of a distributed system under applied environmental stress to be investigated. A detailed description of the EDSC design is given in NUREG/CR-6406, *Environmental Testing of an Experimental Digital Safety Channel*,[17] and is summarized herein.

The EDSC consists of two major functional subsystems: the test system (i.e., the equipment under test) and the test control system. The test system represents a single channel of an advanced reactor protection system, based on ALWR designs, and consists of the process multiplexing unit (PRS/MUX), a digital trip computer (DTC), and an engineered safety feature multiplexing unit (ESF/MUX). The test control system simulates the test scenarios (i.e., generates analog signals corresponding to various reactor conditions), simulates the other three channels of a reactor protection system (some advanced designs include interchannel communication for trip voting, as does the EDSC), and monitors and logs the performance of the test system during environmental testing.

The function of the PRS/MUX is to acquire "process analog signals," digitize these data, and format them into frames suitable for transmission over a fiber distributed data interchange (FDDI) network. In the EDSC implementation, these "process analog signals" are generated by a 16-channel digital-to-analog (D/A) plug-in card inside the host processor (HOSTP), which simulates actual field instrumentation, such as transmitters. The DTC polls the network to acquire the digital values of the process signals from the PRS/MUX. It then compares individual process variables with trip set point values and sends a trip/no trip indication for each variable over three independent fiber-optic serial datalinks to the HOSTP. At the same time, the HOSTP sends trip/no trip information for each variable to the DTC via three independent serial datalinks. The DTC performs 2-out-of-4 voting on each set (local coincidence) of process trip/no trip information received (note that for each process parameter the DTC votes on four trip/no trip data sets—one calculated from the PRS/MUX process data received via the FDDI network, and the other three received from the HOSTP via the serial datalinks). The ESF/MUX demultiplexes the digital information sent by the HOSTP via the FDDI network into the appropriate analog signals. In this way, it simulates engineered safety system actuation signals.

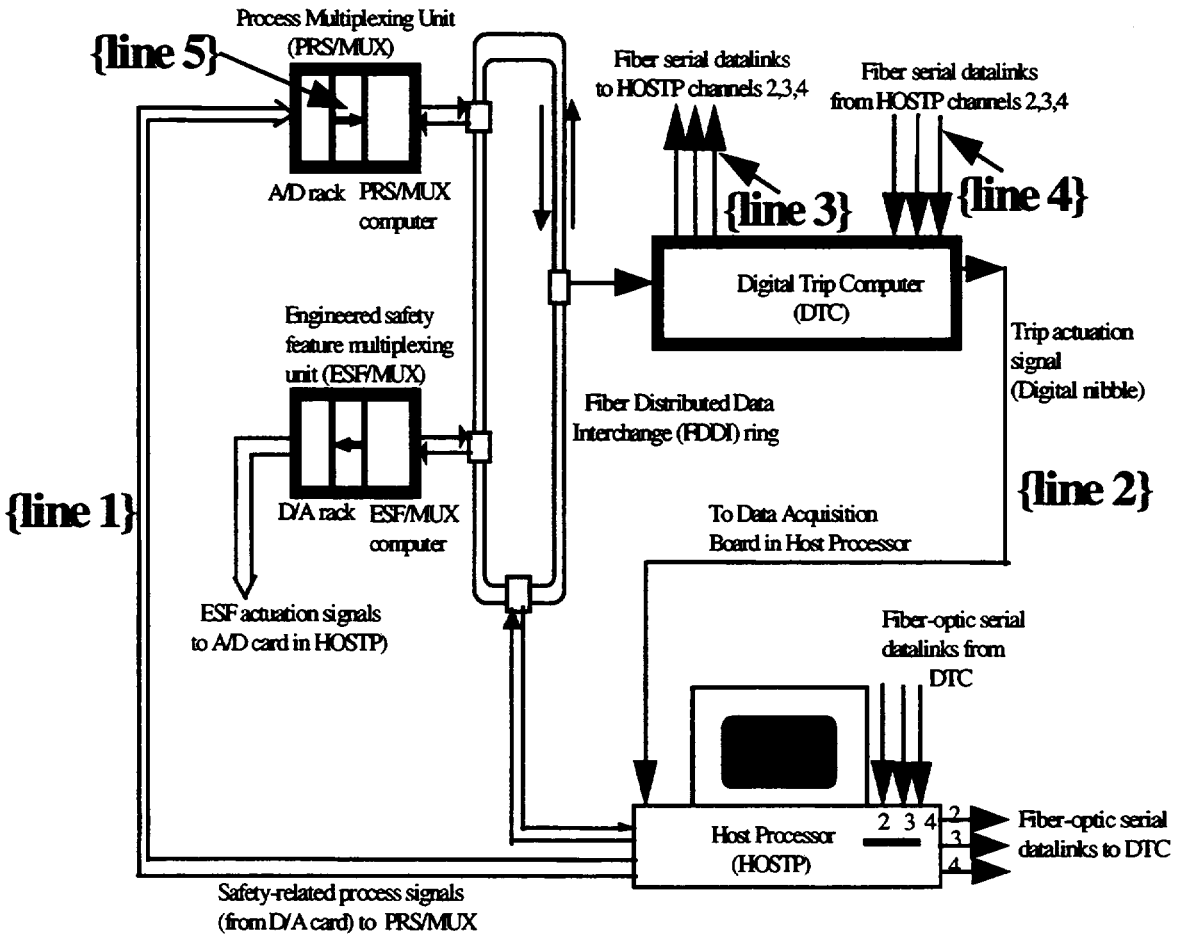

Fig. 5.1. Block diagram of the experimental digital safety channel.

5.2 EMI/RFI Test Methods and Operating Envelopes

EMI/RFI tests were performed on the EDSC according to the test criteria and test methods stipulated in MIL-STD-461E[6]. MIL-STD-461E provides a basis for evaluating the electromagnetic characteristics of military equipment and subsystems by establishing test criteria and defining operating envelopes for specific environments. The MIL-STD-461E test methods deemed applicable to interconnecting signal lines are CS114, CS115, and CS116. A full description of each of the test methods is given in Sect. 4. A portrayal of how ORNL staff implemented the test methods and the operating envelopes employed while conducting the tests are given below. The interconnecting signal lines tested are marked {line 1} through {line 5} in Fig. 5.1.

5.2.1 CS114 Test, Bulk Cable Injection of CW EMI/RFI

The CS114 test was performed to verify the ability of the EDSC to withstand CW EMI/RFI in the frequency range from 10 kHz to 30 MHz. The test setup employed is the one shown in Fig. 4.7; details of the test procedures can be found in MIL-STD-461E. The purpose of the CS114 test was to couple calibrated power (current) levels onto interconnecting signal lines and to assess their impact. The power

injection levels were established with the calibration setup in Fig. 4.8 to correspond with the 97-dBμA operating envelope called out in MIL-STD-461E for Army ground installations.

The pass/fail criterion was that the EDSC failed the CS114 test if any operational upsets occurred at levels equal to or below the calibrated power levels corresponding to the operating envelope. Power signals were injected onto the signal line under test (LUT), starting at a low level and increasing until either a degradation of performance was observed in the operation of the EDSC or the calibrated power level was reached.

The following exceptions were made to the MIL-STD-461E test criteria and test method used for the CS114 test:

1. The MIL-STD-461E operating envelope selected covers the frequency range from 2 MHz to 200 MHz. For the purpose of this test, the operating envelope was modified to cover the frequency range of interest, 10 kHz to 30 MHz.

2. The current induced on the signal lines was monitored to avoid overstressing the EDSC, but was not included in the pass/fail criterion. This is contrary to the MIL-STD-461E test methodology, where the test signal level is increased until either the calibrated power level or the maximum current level in the operating envelope is reached, whichever is less stringent. The reason for the deviation was that two measurement receivers are required for simultaneously monitoring the power level and injected current. Only one measurement receiver was available, and the decision was made to monitor the power level as the pass/fail criterion.

3. The frequency steps specified in MIL-STD-461E were not used. In the interest of performing the tests in a reasonable period of time, three steps per frequency decade were deemed sufficient for the purpose of this test.

4. The upper frequency tested was 30 MHz, instead of 200 MHz as specified in MIL-STD-461E test criteria. 30 MHz was selected under the assumption that the RS03 test (radiated susceptibility, electric field, 10 kHz to 40 GHz) previously conducted on the EDSC adequately tested its performance at higher frequencies. The results of the RS03 tests are documented in NUREG/CR-6406.[17]

5.2.2 CS115 Test, Bulk Cable Injection of Impulse Excitations

The CS115 test was performed to verify the ability of the EDSC to withstand impulse signals coupled onto its associated cabling. The test setup employed is the one shown in Fig. 4.10; details of the test procedures can be found in MIL-STD-461E. Injection levels for the impulse signals were established with the calibration setup in Fig. 4.11 to correspond to the 5-A operating envelope called out in MIL-STD-461E for Army ground subsystems and equipment. The test signal waveform employed during the calibration is the one shown in Fig. 4.12. The waveform has a 2 ns rise and fall time, a 30 ns duration. and a repetition rate of 30 Hz.

The pass/fail criterion was that the EDSC failed the test if any operational upsets occurred at levels equal to or below the calibrated test signal levels corresponding to the operating envelope. Impulse signals were injected onto the signal LUT, starting at a low level and increasing until either a degradation of performance was observed in the operation of the EDSC or the calibrated test signal level was reached.

5.2.3 CS116, Injection of Damped Sinusoidal Transients

The CS116 test was performed to verify the ability of the EDSC to withstand the impact of conducted damped sinusoidal transients in the frequency range from 10 kHz to 100 MHz. The test setup employed is the one shown in Fig. 4.13; details of the test procedures can be found in MIL-STD-461E. Damped sinusoidal transient levels for the tests were established with the calibration setup in Fig. 4.14 to correspond to the operating envelope called out in MIL-STD-461E for Army ground subsystems and equipment. The operating envelope ramps up from 0.1 A at 10 kHz to 10 A at 1 MHz, remains flat at 10 A from 1 MHz to 30 MHz, and ramps down from 10 A at 30 MHz to 3 A at 100 MHz. The test signal waveform employed during the calibration is the one shown in Fig. 4.15.

The pass/fail criterion was that the EDSC failed the test if <u>any</u> operational upsets occurred at levels equal to or below the calibrated test signal levels corresponding to the operating envelope. Damped sinusoidal transients were injected onto the signal LUT, starting at a low level and increasing until either a degradation of performance was observed in the operation of the EDSC or the calibration test signal level was reached.

5.3 EMI/RFI-Induced Errors in the EDSC

The EMI/RFI-induced errors in the EDSC that were actually observed during the conducted EMI/RFI susceptibility tests are listed below.

a. *Timeout by DTC on attempt to read data from HOSTP channel 2 fiber-optic serial datalink.* This indicates that the DTC never received the data it was expecting from the channel 2 serial port of the HOSTP.

b. *Timeout by DTC on attempt to read data from HOSTP channel 3 fiber-optic serial datalink.*

c. *Timeout by DTC on attempt to read data from HOSTP channel 4 fiber-optic serial datalink.*

d. *Timeout by HOSTP on attempt to read data from DTC fiber-optic serial datalink to channel 2.*

e. *Timeout by HOSTP on attempt to read data from DTC fiber-optic serial datalink to channel 3.*

f. *Timeout by HOSTP on attempt to read data from DTC fiber-optic serial datalink to channel 4.*

g. *Corrupted data from HOSTP channel 4 fiber-optic serial link to DTC.*

h. *Channel trip (nibble) error.* This occurred when the HOSTP received an incorrect "trip nibble" (four bits of digital data) from the DTC. This problem could be due to (1) noise on the interconnecting signal line itself between the DTC and the HOSTP, (2) a stuck bit on the I/O board in the DTC so that the calculated 2-out-of-4 voting trip/no-trip nibble output intended for the HOSTP was not correctly received, or (3) upsets on other cards in the DTC (e.g., memory), caused an erroneous digital nibble value to be calculated.

i. *Difference between voltage sent to, and that transmitted by, the PRS/MUX for one or more process signals.* Digitized values of hardwired analog process signals sent to the PRS/MUX by the HOSTP are echoed back to the HOSTP via the FDDI network. This type of error constituted a loss of data accuracy and was reported whenever the voltage difference was greater than 100 mV.

j. *Network data packet could not be sent by PRS/MUX.* This usually indicated a network hardware fault in the PRS/MUX node.

k. *Network data packet could not be sent by DTC.* This usually indicated a network hardware fault in the DTC node.

5.4 Conducted EMI/RFI Susceptibility Test Results

The EDSC was found to be susceptible to the CW EMI/RFI test signals injected during the CS114 tests at levels below the calibrated power levels corresponding to the MIL-STD-461E acceptance criterion of 97 dBμA for power leads. Errors were observed during the testing on data lines 1, 2, 4, and 5. No errors occurred on data line 3 during the testing. The testing was performed at eleven discrete CW frequencies, and errors occurred at eight of them. The errors observed were type c, g, h, and i. The errors were caused by malfunctions in the operation of the EDSC, and the system returned to its normal operation shortly after the test signal was removed. Errors occurred frequently and typically occurred at frequencies above 300 kHz.

All of the EDSC's data lines were found to be susceptible to injected impulses during the CS115 tests at levels far below the MIL-STD-461E acceptance criterion of 5 A. The errors received were type *h*, *j*, and *k*. The EDSC was able to recover each time after errors had occurred (including system hang-ups), although on many occasions the EDSC had to be manually reset before the recovery was possible. Investigations also showed that the system's ability to automatically recover (i.e., whether it had to be manually reset) often depended on the test duration. Of the three conducted EMI/RFI susceptibility tests performed, the EDSC system and its interfaces were found to be most susceptible to the CS115 test impulses in terms of the level at which malfunctions began to occur. The onset of upsets was found to occur at impulse levels less than 2 A (i.e., at levels less than 40% of the operating envelope). However, it is interesting to note that no permanent failures occurred during the CS115 tests.

As with the CS115 tests, all of the EDSC's data lines were found to be susceptible during the CS116 tests. Errors were observed at levels far below the MIL-STD-461E CS116 operating envelope, which varies from 0.1 A to 10 A over the frequency range from 10 kHz to 100 MHz. The errors received were type *a* through *f*, *h*, *j*, and *k*. The EDSC was able to automatically recover from the errors sometimes after the removal of the test signal but often had to be rebooted to resume operation. In general, the CS116 tests had the most adverse effect on the electronic boards of the EDSC system in terms of permanent failures. Permanent failures occurred on a serial communications card and a digital I/O card during the CS116 tests. The cards had to be replaced before testing could resume.

The errors encountered during the conducted EMI/RFI susceptibility tests can be classified into three categories: implementation-related upsets, timing-related upsets, and LUT-related upsets. A breakdown of the errors is given below.

Implementation-Related Upsets. These were errors due to coupling between the LUT and another signal line. An instance of this was suspected to have occurred during the CS114 tests on data line 1, where nibble errors associated with data line 2 were encountered. This type of error could be eliminated in a safety-related system implementation by employing appropriate installation practices (e.g., proper grounding, shielding, and cable separation). Many of the CS114 errors fell into this category.

Timing-Related Upsets. These errors occurred as a result of a system time-out by a node waiting in vain for data from another node whose associated signal line was under test, or it could have been the result of a system hang-up due to possible garbled data on the network. An example is the "TCP-Read" time-outs

that occurred on several occasions during the CS115 tests. A significant number of upsets encountered during the CS115 and CS116 tests fell into this category.

LUT-Related Upsets. These were errors that occurred as a result of EMI/RFI-related upsets associated with a particular LUT. For example, data line 1 carries "analog process signals" from the HOSTP to the analog-to-digital (A/D) modules in the PRS/MUX, which then digitize the analog signals and send them over the network to the DTC. Differences in the magnitude between the actual signal sent to the PRS/MUX and the one received by the DTC (type *i* error) could be expected to occur when line 1 was the LUT. Upsets in this category were encountered during the CS114, CS115, and CS116 tests.

An important point to note is that, for the operating envelopes used, analog signal lines appeared to be just as susceptible as digital signal lines. It should also be noted that the EDSC subsystems were selected and assembled to represent the typical hardware configuration of a single channel of advanced modules running a program that simulates protection system software. However, the differences between the EDSC and a typical digital protection system have to be taken into account when assessing the impact of the operating envelopes employed during the tests. These differences might include the following.

1. No special EMI-hardening precautions were taken during the initial implementation of the EDSC (discussed in NUREG/CR-6406) or during the refurbishment of the EDSC for these tests. This was in keeping with the objective of the tests to identify and confirm EMI/RFI-induced upsets on a representative digital safety channel.

2. Many of the cables and electronic boards remained unchanged since the environmental tests performed on the EDSC a few years earlier. The impact of the previous testing on the susceptibility of the EDSC is unknown.

3. Some of the cable-routing schemes used are unlikely to be the typical practice in actual protection system implementations (e.g., the PRS/MUX analog signal cable and digital I/O "nibble" cable were brought into the same junction box due to space considerations).

4. A significant proportion of the errors encountered could be classified as implementation-related or timing-related errors (both of which can be either minimized or eliminated by hardware and/or software design).

6 CONDUCTED EMI/RFI ON TEST ARTIFACT

The artifact used for the conducted susceptibility tests was developed at ORNL and consisted of an analog-to-digital converter (ADC) and a random access memory (RAM) interfaced to a laptop computer through optoisolators. The latter were used for all analog and digital I/O data lines as well as for the control and address lines. This ensured that high-level perturbations, due to test signal injection in the data lines, would not propagate into the computer.

The artifact actually consists of two separate modules; an Artifact Module (AM) and an Interface Module (IM), each housed in a separate chassis. Figure 6.1 shows a block diagram of the AM and how it interfaces to a personal computer (PC) through the IM. Figure 6.2 shows a system-level schematic of both modules. The AM consists of a single printed circuit board (PCB) containing the ADC and the RAM. The IM also consists of a single PCB containing all the optoisolators used for interfacing the data, address, and control lines from the AM. Figures 6.3 and 6.4 show schematics of the AM and IM printed circuit boards, respectively.

6.1 Description of Artifact and Interface Module Schematics

6.1.1 Artifact Module

The PCB in the AM chassis (see Fig. 6.3) consists of one 8-bit complementary metal-oxide semiconductor (CMOS) successive approximation ADC [model ADC0802 (U1)], and one 128Kx 8 Static RAM [model CYC1009 (U3)]. A dc power source supplies +15V, and −15V to the board. In addition, two voltage regulators, U5 and U4 respectively supply +5V to the circuits on board and $V_{ref}/2$ (in this case, 2.5 V) to the ADC.

An internal clock is generated by the ADC for internal timing purposes. This clock is connected via buffer U2 output CLOCK_READ to the input of ISO29 (see Fig. 6.4) and may be read by the computer for diagnostics or other purposes.

6.1.2 Interface Module

The PCB in the IM chassis (see Fig. 6.4) consists of thirty-two 20-megabaud common-mode rejection logic optocouplers. The model HCPL-2430 optocouplers are interfaced to the 16 RAM address lines (A0_A through A16_A), and the control lines BAR_RD_C(A), BAR_WR_C(A), BAR_CS_C(A), BAR_CE1_C(A), BAR_WE_C(A), BAR_OE_C(A), and OPTOTRI (OPTO_WRITE_1, OPTO_WRITE_2, and OPTOTRI_IN). Note that the optocouplers work in such a way that when the cathode of the input diode goes LO, it turns the associated NAND gate ON and its corresponding output goes LO. For example, when OPTOTRI goes LO, both OPTO_WRITE_1 and OPTOTRI_2 go LO, and OPTOTRI_IN goes HI since its input OPTOTRI is inverted through U6A.

The HCPL-2430 optocoupler is also used to interface an external clock from the computer to the ADC in the artifact through CLOCK_OUT_A. Note that although this provision has been made, the artifact currently does not use an external clock; rather, as has already been explained, an internal clock is generated by the ADC in the artifact (see Fig. 6.3), which is connected to the input of ISO29 (see Fig. 6.4) via CLOCK_READ_A.

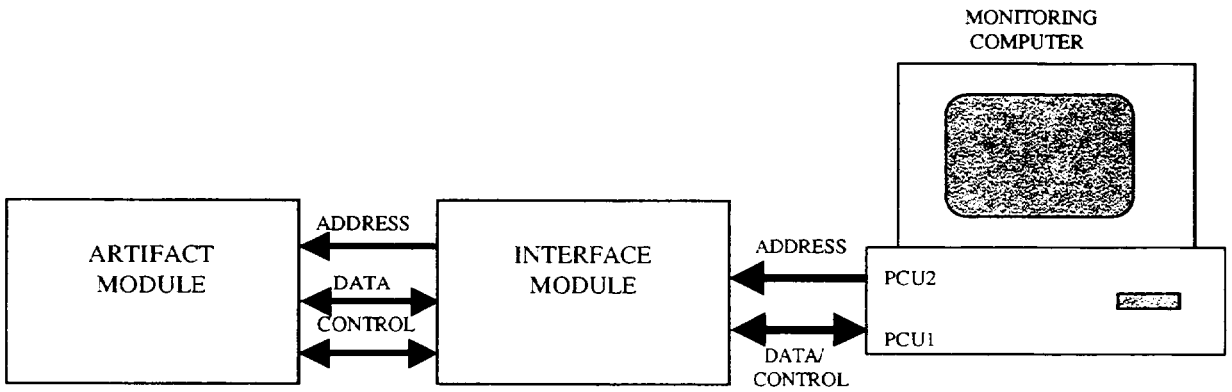

Fig. 6.1. ORNL artifact system.

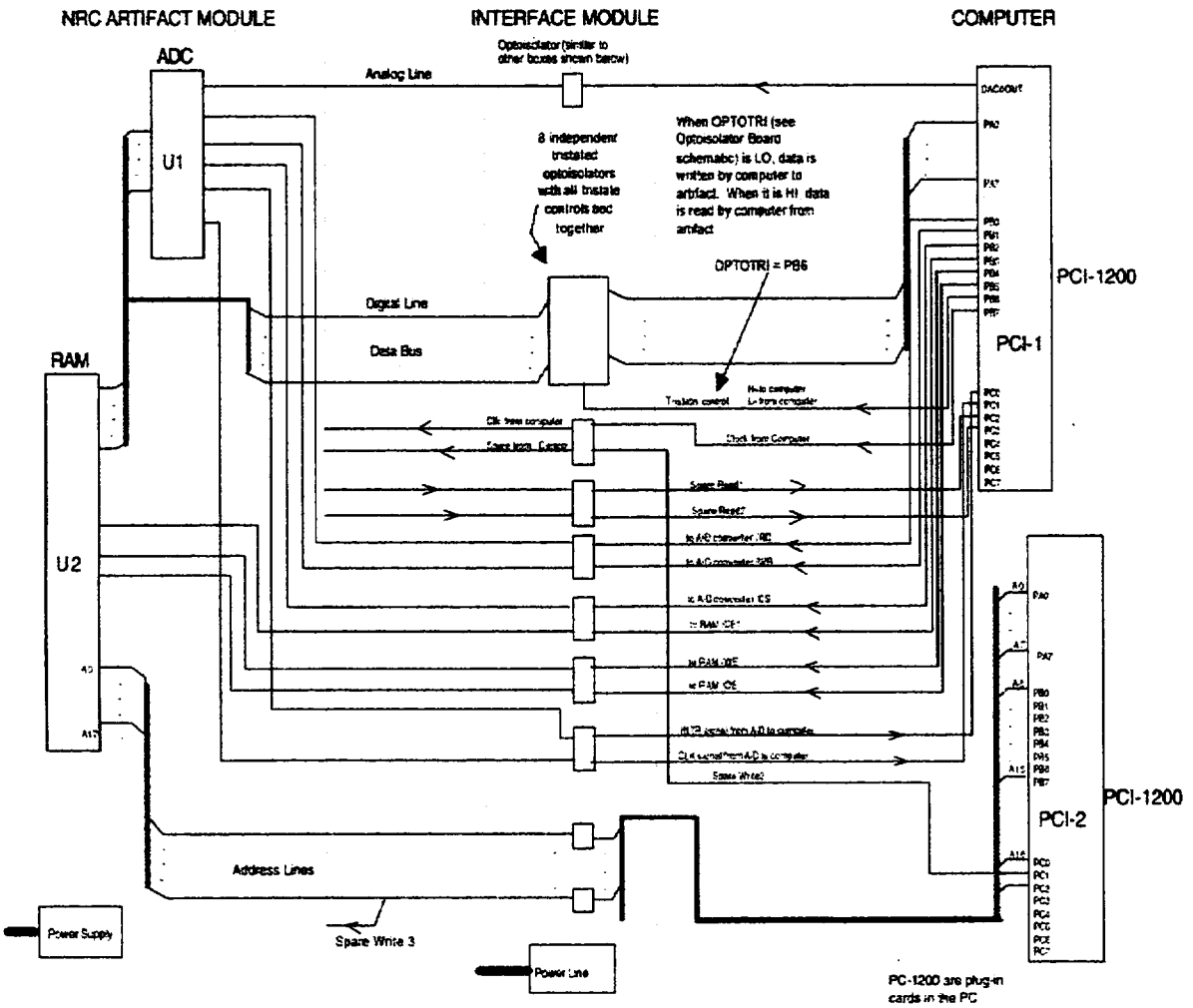

Fig. 6.2. System-level artifact schematic.

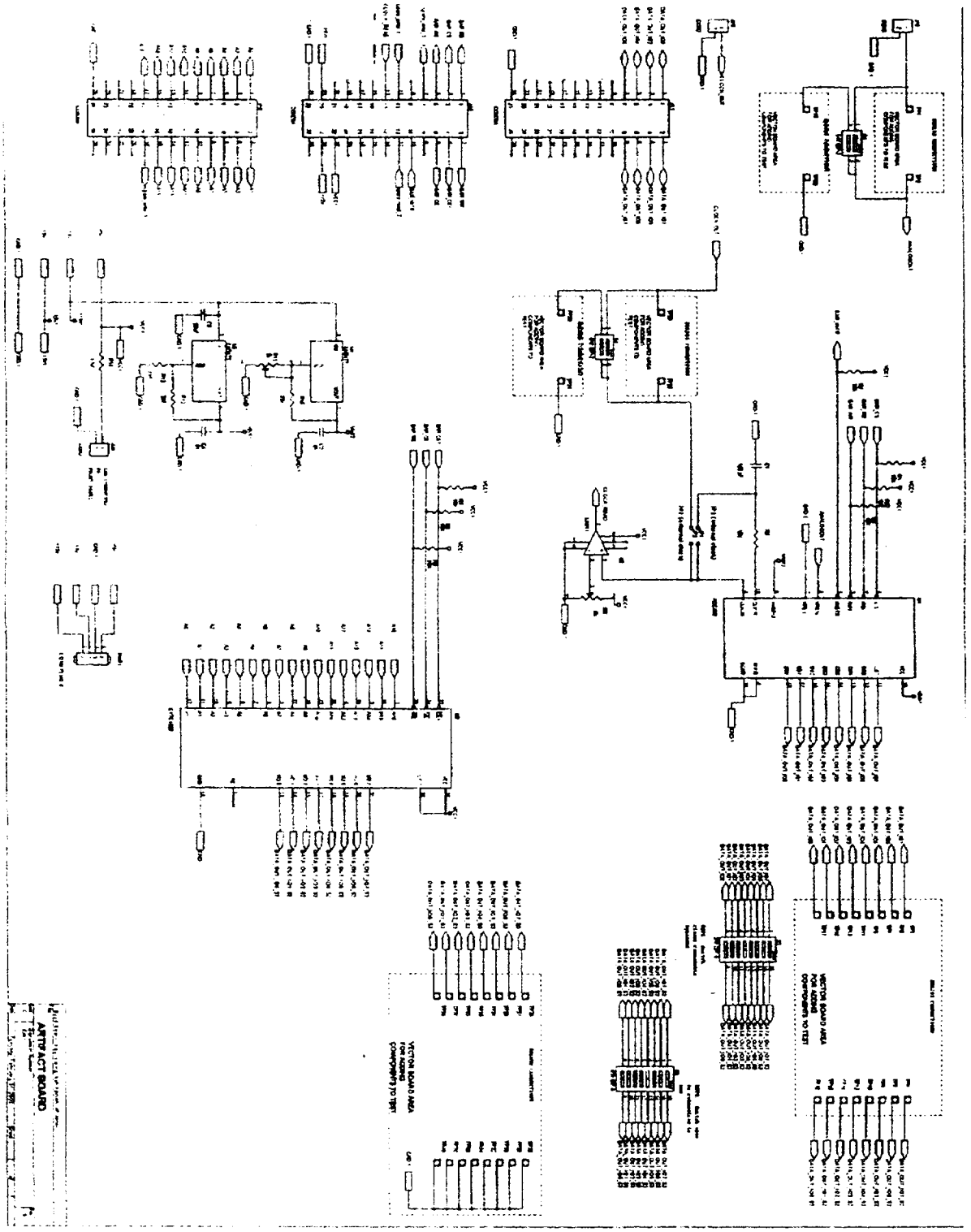

Fig. 6.3. Artifact module printed circuit board.

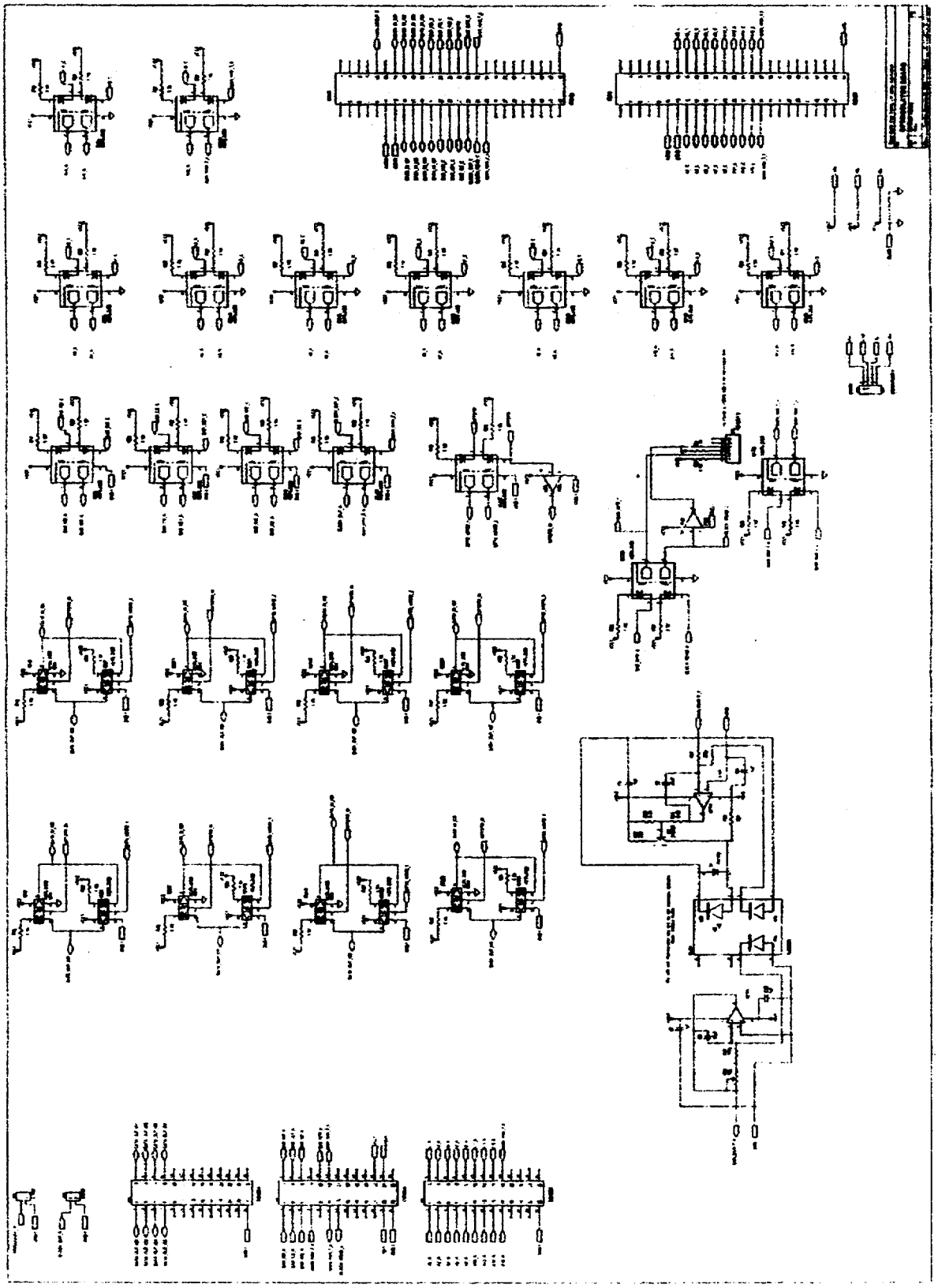

Fig. 6.4. Interface module printed circuit board.

The 8-bit data bus from the computer goes through eight pairs of optoisolators (model HCPL-2400). Each pair is connected back-to-back such that the eight pairs form an 8-bit, *bidirectional* data bus. In Fig. 6.4, consider the optoisolator pair connected to any of the data lines (DATA_IN_IOX). When the tristate input OPTOTRI of ISO25 is LO, the output of the same chip (OPTO_WRITE_1) is LO and the associated output (OPTOTRI_IN) from U6A is HI. The reverse is true when OPTOTRI is HI. OPTO_WRITE_1 is connected to the tristate input of one-half of the optoisolator pair, and OPTOTRI_IN is connected to the tristate input of the other half. When this tristate input is LO, the associated optoisolator is enabled and when it is HI, the associated optoisolator is disabled (high impedance state). Thus, when the control signal OPTOTRI from the computer is LO (OPTO_WRITE_1 is LO and OPTOTRI_IN is HI), data from the computer side (DATA_IN_IOX) are available on the artifact side (DATA_OUT_IOX) (i.e., data are *written* by the computer to the artifact). On the other hand, when the control signal OPTOTRI from the computer is HI (OPTO_WRITE_1 is HI and OPTOTRI_IN is LO), data from the artifact side (DATA_OUT_IOX) are available on the computer side (DATA_IN_IOX) (i.e., data are *read* by the computer from the artifact).

The analog signal from the computer connects to the artifact through a high-linearity analog optocoupler HCNR201.

6.1.3 PCI-1200 I/O Cards

The IM connects to the PC through two identical PCI-1200 multifunction I/O boards. The PCI-1200 has eight single-ended, four differential, software selectable analog input (via ADC) channels; two analog output [via digital-to-analog converter (DAC)] channels; and 24 digital I/O lines. These I/O lines are configured as three 8-bit ports (PA, PB, and PC). There are 3 programmable modes of operation for the digital ports—Mode 0, Mode 1, and Mode 2. Each of these modes determine how individual ports are configured (input, output, or bidirectional). These modes can be changed at any time within a program via a control register (CR). Configurations of the three ports in each of the PCI-1200 cards (PCU1 and PCU2 in Fig. 6.1) are given in Sects. 6.1.3.1 and 6.1.3.2.

6.1.3.1 Ports in PCU1

Port A is used as the data bus. It is used to input data from either the ADC (AU1) or the RAM (AU2). It is also used to output data to the RAM. Thus, port A is used both as an input and output port. Port B is used only as an output port. The bits of this port are used to control the ADC and the RAM. Port C is used as an input port (only the lower nibble is used in this design).

Mode 0 is used as the programmable mode for this configuration. The control word (in the CR register) necessary for this configuration is shown in Table 6.1. The "Number" column corresponds to the number chosen out of the 16 possible configurations in Mode 0.

Table 6.1. Control word content for PCU1 ports configuration (Mode 0)

Number	Control word	Group A		Group B	
	Bit 76543210	Port A	Port C[a]	Port B	Port C[b]
5	10001001 (89H)	Output	Input	Output	Input
13	10011001 (99H)	Input	Input	Output	Input

[a]Upper nibble of Port C
[b]Lower nibble of Port C

The bit designations for the ports during each configuration in Mode 0 are illustrated in Table 6.2.

Table 6.2. Bit designations for the ports during each configuration in Mode 0

Mode 0; CR=99H							
Input PA7	Input PA6	Input PA5	Input PA4	Input PA3	Input PA2	Input PA1	Input PA0
Mode 0; CR=99H							
Output PB7	Output PB6	Output PB5	Output PB4	Output PB3	Output PB2	Output PB1	Output PB0
Mode 0; CR=99H							
Input PC7	Input PC6	Input PC5	Input PC4	Input PC3	Input PC2	Input PC1	Input PC0
Mode 0; CR=89H							
Output PA7	Output PA6	Output PA5	Output PA4	Output PA3	Output PA2	Output PA1	Output PA0
Mode 0; CR=89H							
Output PB7	Output PB6	Output PB5	Output PB4	Output PB3	Output PB2	Output PB1	Output PB0
Mode 0; CR=89H							
Input PC7	Input PC6	Input PC5	Input PC4	Input PC3	Input PC2	Input PC1	Input PC0

6.1.3.2 Ports in PCU2

Most of the digital bits in PCU2 are used as address lines (there are 17 address lines in all) for the RAM (AU2). Only two other bits are needed as outputs (i.e., the total number of bits needed as outputs = 19). Thus, for convenience, ports A, B, and C are all configured as output ports. This configuration corresponds to Mode 0 with a CR value of 80H (as shown in Table 6.3).

Table 6.3. Control word content for PCU2 ports configuration (Mode 0)

Number	Control word	Group A		Group B	
	Bit 76543210	Port A	Port C[a]	Port B	Port C[b]
0	10000000 (80H)	Output	Output	Output	Output

[a]Upper nibble of Port C
[b]Lower nibble of Port C

6.2 System Software

6.2.1 System Algorithm

6.2.1.1 Assumptions

a. The control inputs to the ADC in the artifact from the computer are "Read" (BAR_RD), "Write" (BAR_WR), and "Chip Select" (BAR_CS). The BAR designation signifies a LO TRUE signal. In addition, there is one control output from the ADC to the computer; the "Interrupt" or BAR_INTR.

b. The control inputs to the RAM in the artifact from the computer are "Chip Enable One" (BAR_CE1), "Write Enable" (BAR_WE) and "Output Enable" (BAR_OE).

6.2.1.2 Algorithm

1. The computer generates, via the DAC, the analog equivalent of the digital data XXH and sends it to the ADC in the artifact. Valid values of XXH are from 00H - FFH, corresponding to 8 bits of ADC resolution.

2. The computer selects the ADC in the artifact by setting BAR_CS LO. Note that the RAM need not be selected at this time (i.e., BAR_CE1 remains HIGH). BAR_WE and BAR_OE are placed HI at this time. Also, the other control input of the RAM, CE2 (pin 30), is tied to Vcc permanently. Note that BAR_WR and BAR_RD of the ADC remain HI at this time.

3. The computer commands the ADC in the artifact to convert analog data by setting pulsing BAR_WR LO (i.e., setting BAR_WR LO and then back to HI). Note that according to the data sheet, conversion will start from one to eight clock periods after at least one of the inputs (BAR_CS or BAR_WR) makes a LO-to-HI transition.

4. The computer waits for 10 ms (data conversion will be completed long before this time), then commands the ADC in the artifact to put the converted data on the output bus. It does this by setting BAR_RD LO (the combination of BAR_CS and BAR_RD LO will reset the BAR_INTR line HI). This line went LO when conversion was complete, and could have been used by the computer to detect "Conversion Complete." The ***n***INTR will indeed be monitored by the computer but will be used only for diagnostics purposes. If the computer depends on BAR_INTR to proceed, the computer will be in an infinite loop (i.e., it will not continue further testing) if the ADC malfunctions.

5. The computer reads the digital data from the ADC and compares the data with the XXH value it put out during step 1. These values should match. Note that BAR_RD is set back to HI after the data have been read by the computer. This puts the ADC output in the high impedance state.

The RAM now needs to be checked with the same digital value it used for the ADC. The problem is which RAM location do we write this data? We can solve this problem simply by using the digital ***data*** *generated in step 1 (XXH) as an* ***address*** *for the RAM.*

6. The computer outputs the value XXH onto the address bus.

7. the computer commands RAM to write data into location XXH. It does this by pulling BAR_CE1 and BAR_WE LO. This will put the data into the RAM.

8. The computer reads back data from RAM. It does this by first pulling BAR_WE HI, then BAR_OE LO. BAR_CE1 remains LO and both the written data and the read data should match. After the data have been read, BAR_CE1, BAR_WE, and BAR_OE are all pulled back HI. This deselects the RAM and puts the output in the high impedance state, ready for the next iteration.

9. The loop is repeated for the next digital value (XXH + 1).

6.2.2 Types of Errors Encountered

The following objectives were observed in the design of the artifact.

a. A minimal set of components were used in order to reduce the number and type of errors that could be encountered and observed at the chip level.

b. The artifact was isolated from the control/monitoring equipment so that observed errors could be directly attributable to the application of the EMI/RFI test signal to the artifact, and not as a result of the propagation of effects from the control/monitoring equipment.

To achieve objective (a), only two components (one RAM and one ADC) were used. Optoisolators were used to achieve objective (b).

The types of errors in the artifact that the monitoring system was designed to log are described in Sects. 6.2.2.1 and 6.2.2.2.

6.2.2.1 ADC Data Mismatches

This type of error occurred whenever there was a difference between the value of analog data sent to the ADC by the monitoring computer (MC) and the value reported back from the ADC to the MC. An example of an actual entry in the error file is as follows:

12:31:50 PM ADC Mismatch (3) Analog in = 5.000 V Analog out = 4.784 V

The first column is a time stamp, showing the time that the error occurred and the second column shows the time of day (AM or PM). The third column indicates the error type and the fourth column [(n)] gives the number of times the particular error (in this case, ADC mismatch) has occurred during the particular test run. For the error entry under consideration, a total of 3 ADC mismatches have occurred since the beginning of the test run. The fifth column gives the value of the analog voltage as sent to the ADC from the MC. Finally, the sixth column gives the voltage value sent back to the MC from the ADC. (During the tests, the system was set up to log ADC mismatches that were greater than 100 mV.) The software was designed to allow the ADC to cycle from 0 V through 5.0 V in approximately 20-mV increments. (For an 8-bit ADC, this is equivalent to a 1-bit change.)

6.2.2.2 RAM Data Mismatches

This type of error occurred whenever there was a difference between the byte of data sent to the RAM by the MC and the digital byte reported back from the RAM to the MC. An example of an actual entry in the error file is as follows:

1:43:55 PM RAM Mismatch (1) Digital in = 255 Digital out = 129

This entry is similar to the entry type for ADC mismatches and is self-explanatory.

6.3 Artifact Testing

Several tests were conducted at Wyle Labs in Huntsville, Alabama, on the artifact employing the MIL-STD and IEC test methods. Specifically, three MIL-STD-461E tests (CS114, CS115, and CS116) and four IEC 61000-4 tests (61000-4-4, 61000-4-5, 61000-4-6, and 61000-4-12) were performed. The

objective of the EMI/RFI tests was to make the artifact malfunction (if possible) without causing permanent damage.

6.3.1 General Test Procedure

The following general procedure followed for all the tests.

a. Increase the test signal by a predetermined amount from its current setting and wait for 30 seconds.
b. If there are no errors, repeat step (a).
c. If there are errors, verify their repeatability by reducing the current test signal setting, then increasing it back up again.
d. Log any errors on file dynamically during the testing.

NOTE: To ensure that the equipment was functioning properly, baseline data were obtained for at least 5 min prior to each test.

6.3.2 CS114 Test Summary

The CS114 test is used to verify the ability of the EUT to withstand RF signals coupled onto EUT-associated cabling in the frequency range of 10 kHz to 200 MHz. The requirement is applicable to all interconnecting cables, including power cables. The CS114 test setup is shown in Fig. 4.7; the calibration setup is shown in Fig. 4.8.

The test criterion was that the EUT would not exhibit any malfunction, degradation of performance, or deviation beyond the preset tolerances when subjected to the test signal. The calibration levels were specified to be 103 dBμm so that it at least covered the CS114 operating envelope recommended for power leads. The CS114 test results are shown in Tables 6.4 through 6.6. The voltage units from the spectrum analyzer readout have been converted to units of current for convenience. Note that the actual current levels injected on the lines are significantly reduced from the levels injected during the calibration run.

Table 6.4. CS114 test results: power line

Sweep frequency	SG settings (dBm)	SA reading (dBm)	Errors	SA reading (dBμv)	SA reading (dBμA)
10–100 kHz	–41	0 to –15	No	107 to 92	73 to58
10–100 kHz	–38	3 to –12	Yes	110 to 95	76 to 61
100 kHz–1 MHz	–54	–7 to –11	No	100 to 96	66 to 62
100 kHz–1 MHz	–51	–4 to –7	Yes	103 to 100	69 to 66
1–5 MHz	–54	–4 to –30	No	103 to 77	69 to 43
1–5 MHz	–51	–1 to –27	Yes	106 to 80	72 to 46
5–30 MHz	–45	–1 to –29	No	106 to 78	72 to 44
5–30 MHz	–42	2 to –26	Yes	109 to 81	75 to 47
30–100 MHz	–36	5 to –29	No	112 to 78	78 to 44
30–100 MHz	–33	2 to –26	Yes	109 to 81	75 to 47
100–200 MHz	–30	10 to –4	No	117 to 103	83 to 69
100–200 MHz	–27	13 to –1	Yes	120 to 106	86 to 72
200–400 MHz	–27	14 to –37	No	121 to 70	87 to 36
200–400 MHz	–24	17 to –34	Yes	124 to 73	90 to 39

SG = signal generator
SC = spectrum analyzer

Table 6.5. CS114 test results: analog signal line

Sweep frequency	SG settings (dBm)	SA reading (dBm)	Errors	SA reading (dBμv)	SA reading (dBμA)
10–100 kHz	–50	–7 to –24	No	100 to 83	66 to49
10–100 kHz	–47	–5 to –21	Yes	102 to 86	68 to 52
100 kHz–1 MHz	–59	–6 to –15	No	101 to 92	67 to 58
100 kHz–1 MHz	–56	–2 to –12	Yes	105 to 95	71 to 61
1–5 MHz	–59	–8 to –22	No	99 to 85	65 to 51
1–5 MHz	–56	–4 to –18	Yes	103 to 89	69 to 55
5–30 MHz	–47	–12 to –24	No	95 to 83	61 to 49
5–30 MHz	–44	–8 to –21	Yes	99 to 86	65 to 52
30–100 MHz	–41	–2 to –23	No	105 to 84	71 to 50
30–100 MHz	–38	2 to –19	Yes	109 to 88	75 to 54
100–200 MHz	–41	–4 to –21	No	103 to 86	69 to 52
100–200 MHz	–38	–2 to –17	Yes	105 to 90	71 to 56
200–400 MHz	–26	–1 to –10	No	106 to 97	72 to 63
200–400 MHz	–23	1 to –7	Yes	108 to 100	74 to 66

SG = signal generator
SC = spectrum analyzer

Table 6.6. CS114 test results: digital signal line

Sweep frequency	SG settings (dBm)	SA reading (dBm)	Errors	SA reading (dBμv)	SA reading (dBμA)
10–100 kHz	–38	5 to –10	No	112 to 97	78 to 63
10–100 kHz	–35	8 to –11	Yes	115 to 96	81 to 62
100 kHz–1 MHz	–50	3 to –4	No	110 to 103	76 to 69
100 kHz–1 MHz	–47	6 to –2	Yes	113 to 105	79 to 71
1–5 MHz	–53	–1 to –17	No	106 to 90	72 to 56
1–5 MHz	–50	1 to –14	Yes	108 to 93	74 to 59
5–30 MHz	–44	–4 to –20	No	103 to 87	69 to 53
5–30 MHz	–41	1 to –15	Yes	108 to 92	74 to 58
30–100 MHz	–35	6 to –8	No	113 to 99	79 to 65
30–100 MHz	–32	10 to –10	Yes	117 to 97	83 to 63
100–200 MHz	–38	4 to –3	No	111 to 104	77 to 70
100–200 MHz	–35	7 to 0	Yes	114 to 107	80 to 73
200–400 MHz	–26	–3 to –10	No	104 to 97	70 to 63
200–400 MHz	–23	0 to –3	Yes	107 to 104	73 to 70

SG = signal generator
SC = spectrum analyzer

6.3.3 CS115 Test Summary

This test is used to verify the ability of the EUT to withstand impulse signals coupled onto EUT associated cabling, including all electrical cables (analog and digital) interfacing with the EUT enclosures.

The test criterion was that the EUT would not exhibit any malfunction, degradation of performance, or deviation beyond the preset tolerances when subjected to the test signal. The calibration levels for the test

signal were specified to cover at least the CS115 operating envelope specified in MIL-STD-461E (see Fig. 4.12). The MIL-STD-461E specification is a 5-A, 30-ns pulse at a 30-Hz rate for one min.

The injection probe was first calibrated using the setup shown in Fig. 4.11. The pulse generator was adjusted for the specified rise time, width, and repetition rate requirements. The signal was then increased in steps until the oscilloscope indicated that the specified current was flowing in the center conductor of the calibration fixture. At each step, the voltage and current readings were noted. These calibration settings (shown in Table 6.7) were used to determine the current value at which the EUT might encounter errors.

Table 6.7. CS115 calibration settings for pulse generator

Current in calibration fixture (A)	Scope reading (peak volts)	Pulse generator charge voltage (V)	Pulse frequency (pps)
5.0	2.5	+918	30
4.5	2.25	+819	30
4.0	2.0	+750	30
3.5	1.75	+632	30
3.0	1.5	+551	30
2.5	1.25	+456	30
2.0	1.0	+382	30
1.5	0.75	+277	30
1.0	0.5	+186	30
0.5	0.25	+98	30

Actual testing of the artifact was performed in accordance with MIL-STD-461E procedures (see Fig. 4.10). The test signal was started at a level much lower than the MIL-STD specification, then was gradually increased until errors occurred. The CS115 test results are shown in Tables 6.8 through 6.10.

Table 6.8. CS115 test results: analog signal line

Scope reading at which errors occurred (peak volts)	Pulse generator charge voltage (peak volts)	Equivalent current into 50 Ω (A)
2.0	240	4.0
−1.8	221	3.6

Table 6.9. CS115 test results: power line

Scope reading at which errors occurred (peak volts)	Pulse generator charge voltage (peak volts)	Equivalent current into 50 Ω (A)
0.800	89	1.6
−1.2	128	−2.4

Table 6.10. CS115 test results: digital signal line

Scope reading at which errors occurred (peak volts)	Pulse generator charge voltage (peak volts)	Equivalent current into 50 Ω (A)
0.9	71	1.8
−0.6	38	−1.2

6.3.4 CS116 Test Summary

This test is used to verify the ability of the EUT to withstand damped sinusoidal transients, in the frequency range from 10 kHz to 100 MHz, coupled onto EUT associated cables and power leads. The test setup employed is the one shown in Fig. 4.13.

The test criterion was that the EUT would not exhibit any malfunction, degradation of performance, or deviation beyond the preset tolerances when subjected to the test signal. The damped sinusoidal transient calibration levels were established with the setup in Fig. 4.14. The calibration settings (shown in Table 6.11) correspond to the MIL-STD-461E CS116 operating envelope shown in Fig. 4.16. The test was stopped when no errors occurred with high injection levels. The CS116 test data are shown in Tables 6.12 through 6.14.

Table 6.11. CS116 calibration settings for signal generator

Frequency	Calibration fixture peak current (A)	Voltage (peak volts)	Generator setting (percent of full-scale amplitude)
10 kHz	0.1	0.05	43
100 kHz	1	0.5	31
1 MHz	10	5.0	26
10 MHz	10	5.0	37
30 MHz	10	5.0	87
100 MHz	3	1.5	88

Table 6.12. CS116 test results: analog signal line

Frequency	Scope reading (peak volts)	Signal generator amplitude setting (percent of full scale)	Equivalent current into 50 Ω (A)	Comments
10 kHz	8	45	16	No errors (stopped)
100 kHz	5.8	10	11.6	Errors
1 MHz	1.4	2	2.8	Errors
10 MHz	0.5	1	1.0	Errors
30 MHz	0.5	10	1.0	Errors
100 MHz	~0.7	95	1.4	Errors

Table 6.13. CS116 test results: digital signal line

Frequency	Scope reading (peak volts)	Signal generator amplitude setting (percent of full scale)	Equivalent current into 50 Ω (A)	Comments
10 kHz	5.0	57	10	No errors (stopped)
100 kHz	4.0	56	8	No errors (stopped)
1 MHz	0.8	48	1.6	Errors
10 MHz	0.3	<1	0.6	Errors
30 MHz	0.2	<2	0.4	Errors
100 MHz	~1.4	92	2.8	Errors

Table 6.14. CS116 test results: power line

Frequency	Scope reading (peak volts)	Signal generator amplitude setting (percent of full scale)	Equivalent current into 50 Ω (A)	Comments
10 kHz	3.8	62	7.6	No errors (stopped)
100 kHz	3.4	~9	6.8	No errors
1 MHz	1.4	<1	2.8	Errors
10 MHz	2.0	~10	4.0	Errors
30 MHz	1.0	25	2.0	Errors
100 MHz	0.8	Max	1.6	Errors

6.3.5 IEC 61000-4-4 Test Summary

This test is used to verify the ability of the EUT to withstand electrical fast transient bursts such as those originating from switching transients (e.g., interruption of inductive loads and relay contact bounce). Significant for the test are the short rise time, the repetition rate, and the low energy of the transients.

The test criterion was that the EUT would not exhibit any malfunction, degradation of performance, or deviation beyond the preset tolerances when subjected to the test signal. The test was set up as shown in Fig. 6.5. A capacitive coupling clamp was used for coupling the transient bursts to the signal and power lines. The output characteristics of the EFT/B generator were set in accordance with the characteristics specified in IEC 61000-4-4 (see Figs. 4.1 and 4.2). Attributes of the EFT/B waveform are a pulse rise time of 5 ns ± 30% and an impulse duration (50% value) of 50 ns± 30%.

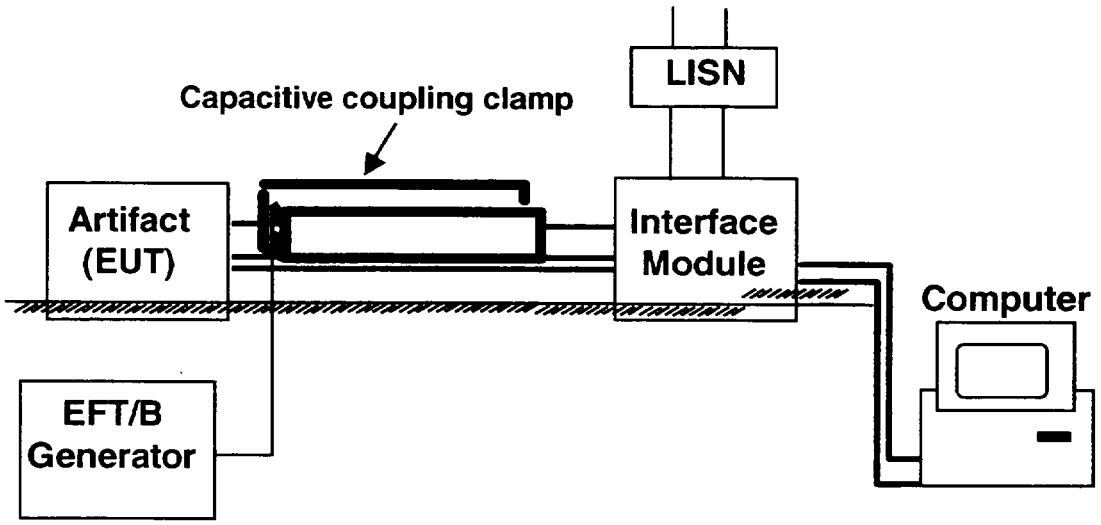

Fig. 6.5. Simplified diagram of setup for IEC 61000-4-4 test.

The repetition rate of the impulses and peak values of the output voltages for the various levels of application are as shown in Table 4.2. Each test was applied for a minimum of 1 min. Note from Table 4.2 that for testing I/O lines, signal and data, the EUT's ports use half the test voltage values applied on power supply ports. The tests were performed using the Level 1 environment (representative of the computer room) as a guideline. This level has the following attributes:

- suppression of all EFT/B in the switched power supply and control circuits;
- seperation between power supply lines (ac and dc) and control and measurement circuits coming from other environments belonging to higher severity levels; and
- shielded power supply cables with the screens earthed at both ends on the reference ground of the installation, and power supply protection by filtering.

The IEC 61000-4-4 test results are shown in Tables 6.15 through 6.19.

Table 6.15. IEC 61000-4-4 test results: analog signal line

Peak voltage (kV)		Comments
Positive polarity	Negative polarity	
0.22	0.22	No errors
0.25	0.25	No errors

Table 6.16. IEC 61000-4-4 test results: digital signal line

Peak voltage (kV)		Comments
Positive polarity	Negative polarity	
0.22	0.22	No errors
0.25	0.25	No errors

Table 6.17. IEC 61000-4-4 test results: power line—line to ground

Positive polarity peak voltage (kV)	Negative polarity peak voltage (kV)
0.22 (no errors)	0.22 (no errors)
0.25 (no errors)	0.25 (no errors)

Table 6.18. IEC 61000-4-4 test results: power line—neutral to ground

Positive polarity peak voltage (kV)	Negative polarity peak voltage (kV)
0.22 (no errors)	0.22 (no errors)
0.25 (no errors)	0.25 (no errors)

Table 6.19. IEC 61000-4-4 test results: power line—line to neutral

Positive polarity peak voltage (kV)	Negative polarity peak voltage (kV)
0.22 (no errors)	0.22 (no errors)
0.25 (no errors)	0.25 (no errors)

6.3.6 IEC 61000-4-5 Test Summary

This test is used to verify the ability of the EUT to withstand unidirectional surges caused by overvoltages from switching and lightning transients. The test was set up as shown in Fig. 6.6. Figure 6.6 is showing the actual setup for the digital line tests. The point marked "A" represents the ribbon connector for all of the 8-bit data lines while the point marked "B" represents just one of the 8-bit lines.

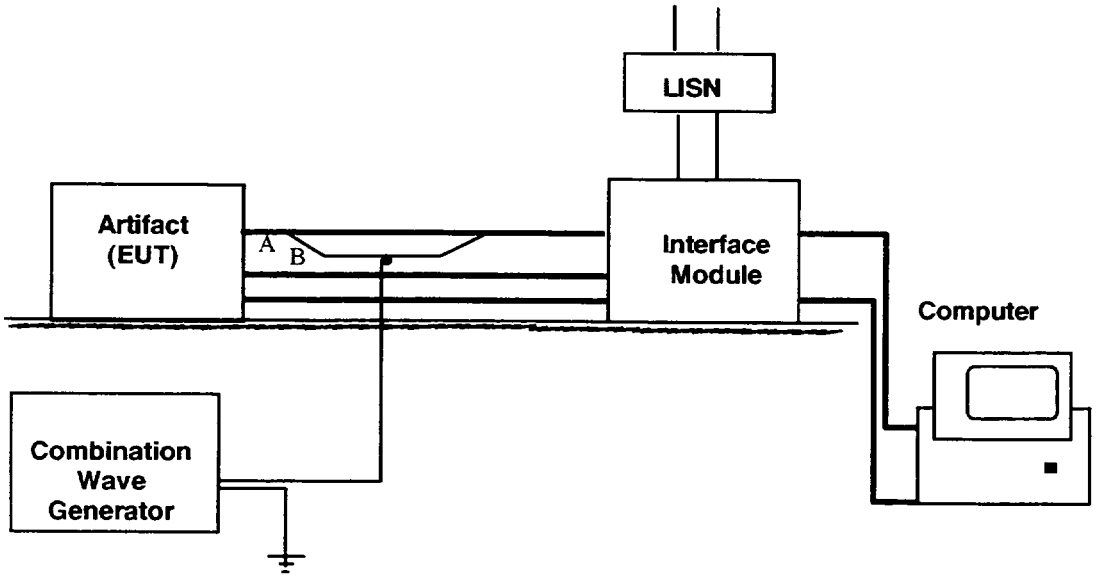

Fig. 6.6. Setup for IEC 61000-4-5 test.

The test criterion was that the EUT would not exhibit any malfunction, degradation of performance, or deviation beyond the preset tolerances when subjected to the test signal. The output characteristics of the combination wave used for the test signal were set in accordance with the IEC 61000-4-5 specifications shown in Figs. 4.3 and 4.4. The test signal level was set at 3 kV to correspond with the IEEE C62.41 operating envelope for the combination wave recommended in NUREG/CR-6431. The results for the IEC 61000-4-5 test are shown in Table 6.20.

Table 6.20. IEC 6100-4-5 power line test results [peak voltage (kV)]

0° phase	Comments	90° phase	Comments	270° phase	Comments
		Positive polarity (line to ground)			
+3.0	No errors	+3.0	No errors	+3.0	No errors
		Negative polarity (line to ground)			
−3.0	No errors	−3.0	No errors	−3.0	No errors
		Positive polarity (neutral to ground)			
+3.0	No errors	+3.0	No errors	+3.0	No errors
		Negative polarity (neutral to ground)			
−3.0	No errors	−3.0	No errors	−3.0	No errors
		Positive polarity (line to neutral)			
+3.0	No errors	+3.0	No errors	+3.0	No errors
		Negative polarity (line to neutral)			
−3.0	No errors	−3.0	No errors	−3.0	No errors

6.3.7 IEC 61000-4-6 Test Summary

This test is used to verify the ability of the EUT to withstand electromagnetic disturbances originating from intended RF transmitters in the frequency range 150 kHz to 80 MHz. The RF signal generator used had a bandwidth of 100 MHz, and was amplitude-modulated by a 1-kHz sine wave with a modulation depth of 80%. A simplified diagram of the test setup is as shown in Fig. 6.7.

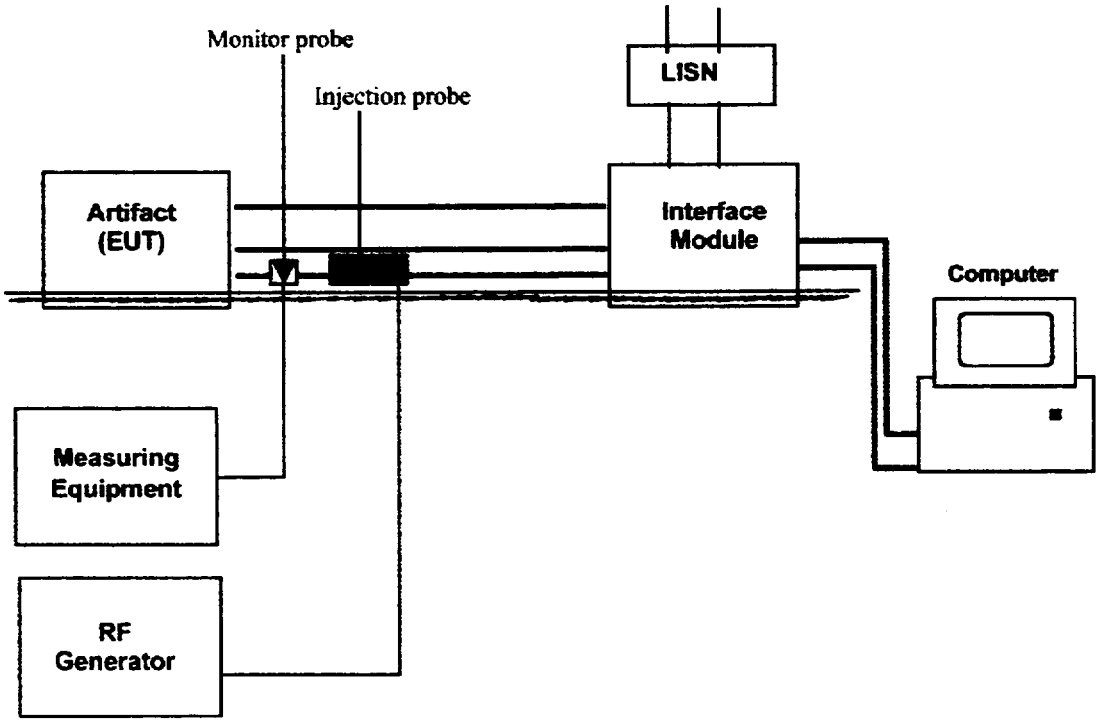

Fig. 6.7. Setup for IEC 61000-4-6 test.

The test criterion was that the EUT would not exhibit any malfunction, degradation of performance, or deviation beyond the preset tolerances when subjected to the test signal. The test signal level was incrementally increased, with the upper bound being set at 140 dBμV to correspond with the IEC 61000-4-6 criteria for areas where portable radios will be used (see Tables 4.5 and 4.6). The results for the IEC 61000-4-6 test are shown in Tables 6.21 through 6.23.

Table 6.21. IEC 61000-4-6 test results: digital signal line

Sweep frequency	SG setting (dBm)	SA reading (dBm)	Errors	SA reading (dBμv)
150 kHz–1 MHz	–50	2 to –2	No	109 to 105
150 kHz–1 MHz	–47	4 to –1	Yes	111 to 106
1–5 MHz	–50	1 to –10	No	108 to 97
1–5 MHz	–47	3 to –5	Yes	110 to 102
5–30 MHz	–41	–2 to –25	No	105 to 82
5–30 MHz	–38	1 to –16	Yes	108 to 91
30–80 MHz	–35	6 to –20	No	113 to 87
30–80 MHz	–32	9 to –16	Yes	116 to 91

SG = signal generator
SC = spectrum analyzer

Table 6.22. IEC 61000-4-6 test results: analog signal line

Sweep frequency	SG setting (dBm)	SA reading (dBm)	Errors	SA reading (dBμv)
150 kHz–1 MHz	–65	–9 to –14	No	98 to 93
150 kHz–1 MHz	–62	–5 to –11	Yes	102 to 96
1–5 MHz	–62	–7 to –18	No	100 to 89
1–5 MHz	–59	–4 to –16	Yes	103 to 91
5–30 MHz	–47	–8 to –34	No	99 to 73
5–30 MHz	–44	–6 to –27	Yes	101 to 80
30–80 MHz	–44	–3 to –28	No	104 to 79
30–80 MHz	–41	–1 to –26	Yes	106 to 81

SG = signal generator
SC = spectrum analyzer

Table 6.23. IEC 61000-4-6 test results: power line

Sweep frequency	SG setting (dBm)	SA reading (dBm)	Errors	SA reading (dBμv)
150 kHz–1 MHz	–51	0 to –3	No	107 to 104
150 kHz–1 MHz	–48	3 to –1	Yes	110 to 106
1–5 MHz	–57	–1 to –20	No	106 to 87
1–5 MHz	–54	2 to –17	Yes	109 to 90
5–30 MHz	–42	0 to –25	No	107 to 82
5–30 MHz	–39	2 to –21	Yes	109 to 86
30–80 MHz	–30	12 to –11	No	119 to 96
30–80 MHz	–27	16 to –8	Yes	123 to 99

SG = signal generator
SC = spectrum analyzer

6.3.8 IEC 61000-4-12 Test Summary

This test is used to verify the ability of the EUT to withstand oscillatory waves represented by (1) nonrepetitive (single shot) damped oscillatory transients (known as "ring wave") in low voltage power, control and signal lines, and (2) repetitive (burst) damped oscillatory transients (known as "damped oscillatory wave").

The ring wave occurs at the terminals of equipment as a consequence of switching in power and control lines, as well as a consequence of lightning. The damped oscillatory wave occurs at the terminals of equipment as a consequence of switching with restriking of the arc, typical of electrical plants, high voltage and medium voltage (HV/MV) stations, as well as of heavy industrial installations.

A diagram of the test set up is shown in Fig. 6.8. The test criterion was that the EUT would not exhibit any malfunction, degradation of performance, or deviation beyond the preset tolerances when subjected to the test signal.

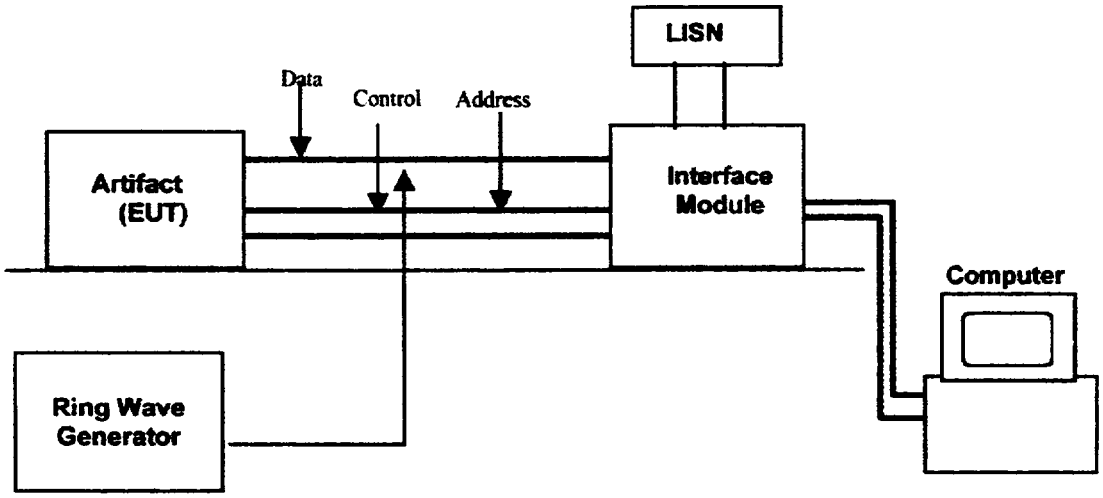

Fig. 6.8. Setup for IEC 61000-4-12 test.

Figures 4.5 and 4.6 show the waveforms of the ring wave and damped oscillatory wave, respectively. Tables 4.7 through 4.10 show the criteria for applying the IEC 61000-4-6 tests. The test signal level was incrementally increased, with the upper bound being set at 4 kV to correspond with the IEC 61000-4-6 criteria for all areas. The results for the IEC 61000-4-6 test are shown in Tables 6.24 through 6.28. Tables 6.24 and 6.25 show the results for random applications of the test signal. Tables 6.26 and 6.27 show the results of placing the test signal at particular phase values.

Table 6.24. IEC 61000-4-12 test results: power line—line to ground—random

Test voltage (kV)	Method of application	Polarity	Test results
0.2	Random	Positive	No errors
0.4	Random	Positive	No errors
0.6	Random	Positive	No errors
0.8	Random	Positive	No errors
1.0	Random	Positive	No errors
1.2	Random	Positive	No errors
1.4	Random	Positive	No errors
1.6	Random	Positive	No errors
1.8	Random	Positive	No errors
2.0	Random	Positive	No errors
2.2	Random	Positive	No errors
2.4	Random	Positive	No errors
2.6	Random	Positive	No errors
2.8	Random	Positive	No errors
3.0	Random	Positive	No errors
3.2	Random	Positive	No errors
3.4	Random	Positive	No errors
3.6	Random	Positive	No errors
3.8	Random	Positive	No errors
4.0	Random	Positive	No errors

Table 6.25. IEC 61000-4-12 test results: power line—line to line—random

Test voltage (kV)	Application of test signal	Polarity	Test results
0.2	Random	Positive	No errors
0.4	Random	Positive	No errors
0.6	Random	Positive	No errors
0.8	Random	Positive	No errors
1.0	Random	Positive	No errors
1.2	Random	Positive	No errors
1.4	Random	Positive	No errors
1.6	Random	Positive	No errors
1.8	Random	Positive	No errors
2.0	Random	Positive	No errors
2.2	Random	Positive	No errors
2.4	Random	Positive	No errors
2.6	Random	Positive	No errors
2.8	Random	Positive	No errors
3.0	Random	Positive	No errors
3.2	Random	Positive	No errors
3.4	Random	Positive	No errors
3.6	Random	Positive	No errors
3.8	Random	Positive	No errors
4.0	Random	Positive	No errors

Table 6.26. IEC 61000-4-12 test results: power line—line to line—phase

Test voltage (kV)	Application of test signal	Polarity	Test results
4.0	0° phase	Positive	No errors
4.0	90° phase	Positive	No errors
4.0	270° phase	Positive	No errors
4.0	0° phase	Negative	No errors
4.0	90° phase	Negative	No errors
4.0	270° phase	Negative	No errors

Table 6.27. IEC 61000-4-12 test results: power line—line to ground—phase

Test voltage (kV)	Application of test signal	Polarity	Test results
4.0	0° phase	Positive	No errors
4.0	90° phase	Positive	No errors
4.0	270° phase	Positive	No errors
4.0	0° phase	Negative	No errors
4.0	90° phase	Negative	No errors
4.0	270° phase	Negative	No errors

Table 6.28. Overview of MIL-STD and IEC standards used in artifact tests

Standard	Frequency	Waveform	Purpose	Coupling
CS114	10 kHz–200 MHz	Pulsed sine	RF	Injection
CS115	N/A	Impulse	Natural resonance	Injection
CS116	10 kHz–100 MHz	Damped sine	Transients	Injection
61000-4-4	1 MHz–100 MHz	Combination	High-voltage transients	Capacitive
61000-4-5	N/A	Combination	Surge	Capacitive
61000-4-6	150 kHz–80 MHz	Modulated sine	RF	Injection
61000-4-12	100 kHz, 1MHz	Ring/damped sine	Transients	Capacitive

6.3.9 MIL-STD and IEC Comparison of Test Results

Table 6.28 shows a high-level comparison of the seven standards employed in the artifact tests. The general trends are as follows.

1. MIL-STD-461E tries to control the delivered current to the EUT, while IEC 61000-4 focuses on controlling the source voltage (and sometimes power).

2. The operating envelopes of MIL-STD-461E use units of amps, while the IEC 61000-4 operating envelopes use units of volts.

3. MIL-STD-461E uses injection probes (inductive), while IEC 61000-4 uses capacitive coupling (except for IEC 61000-4-6).

4. MIL-STD-461E typically calls for adjusting the test generator output to maintain a given level of current injection with the EUT in the circuit; while IEC 61000-4 does not typically adjust for the impedance realities of the EUT.

5. MIL-STD-461E typically calls for probe-to-EUT distances of about 5 cm, whereas IEC 61000-4 allows for distances up to 1 m. This can affect test results above 30 MHz (λ<10 m) since the cable length becomes a significant portion of a wavelength. When the insertion distance becomes a significant portion of a wavelength, the looking-in impedance of the EUT, translated to the injection point, can be greatly affected.

CS114 and IEC 61000-4-6 are the closest equivalents in that they address RF interference, use injection probes, and use fairly similar frequency ranges. In general, the test results from CS114 were similar to those of IEC 61000-4-6. Almost all thresholds were within a few dB for the two tests. Since the test methods are similar and both use injection probes for coupling, the similarity of these results is expected. The differences in modulation types and sweep rates were the likely causes for the slight deviations in the test results.

CS115 is the only one of the test methods dedicated to exciting natural resonances. IEC 61000-4-4 and IEC 61000-4-5 are similar, but the first is aimed at applying EFT voltages and the second is aimed at applying surge voltages, such as those caused by lightning. Therefore, IEC 61000-4-4 uses a much higher coupling impedance (lower capacitance) than does IEC 61000-4-5. The tests produced very dissimilar results. Further investigation is needed to determine why the results differed so much.

CS116 and IEC 61000-4-12 are similar in that they both apply the damped sine wave with approximately the same power. CS116 and IEC 61000-4-12 both utilize the damped sine waveform. However, IEC 61000-4-12 also utilizes a ring wave waveform. In the artifact test of IEC 61000-4-12, only the ring wave waveform was used. Therefore, any comparisons would be suspect, especially since the threshold of energy necessary to cause errors was not reached in the IEC 61000-4-12 tests. Further investigation is needed to complete the comparison of these tests.

It should be noted that the IEC 61000-4-16 test was not performed, as this test procedure had just recently been issued at the time the other tests were performed and test equipment was not yet available.

7 OPERATING ENVELOPES FOR THE NPP ENVIRONMENT

The ORNL recommendations for suitable operating envelopes for IEC 61000-4 are listed in Table 7.1. In accordance with the guidance provided with the IEC 61000-4 test procedures, the IEC 61000-4-4 test level for signal lines is one-half the value of the level for power lines, and the IEC 61000-4-5 test level is the same for both signal and power lines. We decided to maintain this guidance until a technical rationale could be developed for changing it. Also, it is advised that the IEC 61000-4-5 test does not need to be performed on signal lines that are less than 10 m in length. The IEC 61000-4-12 test levels in Tables 4.8 and 4.10 apply to both signal and power lines, but the option is offered to reduce the signal line test voltage by one level. We did this, as is reflected in the recommended test levels for IEC 61000-4-12. The IEC 61000-4-16 test levels are the same for both signal and power lines, so we again decided to maintain this guidance until a technical rationale could be developed for changing it.

Table 7.1. ORNL-recommended levels for IEC 61000-4

Test method	Selected class or level	Test level
IEC 61000-4-4	Level 3—Typical industrial environment (see Table 4.1)	1-kV test voltage, 5-kHz repetition rate (see Table 4.2)
IEC 61000-4-5	Class 2—Electrical environment where cables are well separated (see Table 4.3)	1-kV open-circuit test voltage (see Table 4.4)
IEC 61000-4-6	Class 3—Severe electromagnetic radiation environment (see Table 4.5)	140-dBμV test voltage, 150 kHz to 80 MHz (see Table 4.6)
IEC 61000-4-12	Ring Wave: Level 3—Dedicated power distribution system (see Table 4.7)	1-kV test voltage (see Table 4.8)
	Damped Oscillatory Wave: Level 2—Equipment installed in control building and relay house (see Table 4.9)	0.5-kV test voltage (see Table 4.10)
IEC 61000-4-16	dc and power line frequency, continuous disturbance: Level 3 – Typical industrial environment	10 Vrms (see Table 4.11)
	dc and power line frequency, short duration disturbance: Level 3—Typical industrial environment	100 Vrms (see Table 4.12)
	Conducted disturbance, 15 Hz to 150 kHz: Level 3—Typical industrial environment	3–0.3 Vrms (15 Hz–150 Hz) 1 Vrms (150 Hz–1.5 kHz) 1–10 Vrms (1.5 kHz–15 kHz) 10 Vrms (15 kHz–150 kHz) (see Table 4.13)

The ORNL recommendations for operating envelopes for the MIL-STD tests are shown in Table 7.2. The operating envelopes employed during the testing on the EDSC were used as a starting point. The recommended level for signal lines for the CS114 test is 91 dBμA, which corresponds to 6 dB less than the 97 dBμA level suitable for power leads at Army ground installations. It is advised that the frequency range for the selected curve be 10 kHz to 400 MHz. The recommended level for the CS115 test is 2 A because significant problems were encountered in the EDSC without exceeding this threshold. It is a significant reduction from the 5-A level recommended for Army ground installations. The recommended level for the CS116 test is 5 A because some permanent failures occurred during the EDSC testing. It appears that the 10-A test level recommended for the CS116 test is extremely harsh.

Table 7.2. ORNL-recommended levels for MIL-STD tests

Method no.	Recommended level or class
CS114	91 dBμA—6 dB less than power leads at Army ground installations (see curve #4 in Fig. 4.9)
CS115	2 A—Reduction of 5-A level recommended for Army ground installations (see Fig. 4.12)
CS116	5 A—Reduction of 10-A level recommended for Army ground installations (see Fig. 4.16)

8. CONCLUSIONS

From the statistics deduced from the LER database, it is clear that signal line EMI/RFI is a potential problem that cannot be ignored and that should be adequately addressed. Based on available LER information so far, statistics on the several reportable occurrences indicate that EMI/RFI is not a problem with high safety significance. The two main concerns appear to be the number of false actuations and unresolved EMI/RFI problems. In addition, the process of searching the LER database and analyzing the data revealed some noteworthy observations concerning weaknesses in reporting abnormal occurrences to the LER. These observations are discussed in detail in Appendix A.

The review of the military and commercial standards showed that most of these standards were not applicable to testing electronic and electrical systems for their susceptibility to conducted EMI/RFI and power surges along interconnecting signal lines. Only two of the standards were deemed qualified, mainly because of their specific treatment of issues directly related to conducted susceptibility of interconnected signal lines. The standards recommended by ORNL staff were MIL-STD-461E and IEC 61000-4. The three applicable test criteria and associated test methods from MIL-STD-461E addressing conducted susceptibility for signal lines are CS114, CS115, and CS116. The five applicable test criteria from IEC 61000-4 are 61000-4-4, 61000-4-5, 61000-4-6, 61000-4-12, and 61000-4-16. The disqualification of the other standards was based primarily on their explicit nonapplicability to conducted susceptibility for signal lines or their inadequacy in dealing with conducted susceptibility issues.

9 REFERENCES

1. P. D. Ewing and K. Korsah, *Technical Basis for Evaluating Electromagnetic and Radio-Frequency Interference in Safety-Related I&C Systems*, NUREG/CR-5941, Lockheed Martin Energy Research Corp., Oak Ridge Nat. Lab., April 1994.

2. S. W. Kercel, M. R. Moore, and E. D. Blakeman, *Survey of Ambient Electromagnetic and Radio-Frequency Interference Levels in Nuclear Power Plants*, NUREG/CR-6436, Lockheed Martin Energy Research Corp., Oak Ridge Nat. Lab., November 1996.

3. P. D. Ewing and R. T. Wood, *Recommended Electromagnetic Operating Envelopes for Safety-Related I&C Systems in Nuclear Power Plants*, NUREG/CR-6431, Lockheed Martin Energy Research Corp., Oak Ridge Nat. Lab., January 2000.

4. IEEE Std C62.41-1991 (Reaff 1995), *IEEE Recommended Practice on Surge Voltages in Low-Voltage AC Power Circuits*, Institute of Electrical and Electronics Engineers.

5. IEEE Std C62.45-1992, *IEEE Guide on Surge Testing for Equipment Connected to Low-Voltage AC Power Circuits*, Institute of Electrical and Electronics Engineers.

6. MIL-STD-461E, *DOD Interface Standard Requirements for the Control of Electromagnetic Interference Characteristics of Subsystems and Equipment*, U.S. Department of Defense, Aug. 20, 1999.

7. MIL-STD-461D, *Electromagnetic Emission and Susceptibility Requirement for the Control of Electromagnetic Interference*, U.S. Department of Defense, Jan. 11, 1993.

8. MIL-STD-462D, *Measurement of Electromagnetic Interference Characteristics*, U.S. Department of Defense, Jan. 11, 1993.

9. MIL-STD-464, *Electromagnetic Environmental Effects Requirements for Systems*, U.S. Department of Defense, Mar. 18, 1997.

10. IEC 61000-4-1, *Overview of Immunity Tests*, European Committee for Electrotechnical Standardization, 1995.

11. IEC 61000-4-4, *Electrical Fast Transient/Burst Immunity Test*, European Committee for Electrotechnical Standardization, 1995.

12. IEC 61000-4-5, *Surge Immunity Test*, European Committee for Electrotechnical Standardization, 1995.

13. IEC 61000-4-6, *Immunity to Conducted Disturbances, Induced by Radio-Frequency Fields*, European Committee for Electrotechnical Standardization, 1996.

14. IEC 61000-4-12, *Oscillatory Waves Immunity Tests*, European Committee for Electrotechnical Standardization, 1996.

15. IEC 61000-4-16, *Test for Immunity to Conducted, Common Mode Disturbance in the Frequency Range 0 Hz to 150 kHz*, European Committee for Electrotechnical Standardization, 1998.

16. K. Korsah, R.L. Clark, and R.T. Wood, *Functional Issues and Environmental Qualification of Digital Protection Systems of Advanced Light-Water Nuclear Reactors*, NUREG/CR-5904, Lockheed Martin Energy Corp., Oak Ridge Nat. Lab., April 1994.

17. K. Korsah, T. J. Tanaka, T. L. Wilson, Jr., and R. T. Wood, *Environmental Testing of an Experimental Digital Safety Channel*, NUREG/CR-6406, Lockheed Martin Energy Corp., Oak Ridge Nat. Lab., September 1996.

APPENDIX A. OBSERVATIONS ABOUT THE LICENSE EVENT REPORT DATABASE

A.1 Observations

The following observations are presented as the result of difficulties encountered during our search of the Licensee Event Report (LER) database and analyzing the results. The observations cover some guidelines for potential changes to the LER reporting practices, methods of resolving electromagnetic interference/radio-frequency interference (EMI/RFI) problems, and analytical and measurement tools to support both design and problem resolution.

Observation 1. The reporting procedure for EMI/RFI events could be improved by systematically (e.g., by checklist) identifying the EMI/RFI source, path, affected component, and the reportable occurrence as used in this report. The LER evaluation should address the element of the system's electromagnetic compatibility (EMC) that failed (e.g., whether the disturbances were larger than expected or the system is more sensitive than specified). The improved LER reporting requirements would yield a systematic identification and resolution of EMI/RFI problems and would provide better information for the historical record on EMI/RFI problems.

Observation 2. EMI/RFI is frequently used as an explanation of last resort. Although thorough root-cause investigation using experimental confirmation is obviously desirable to the engineering staff preparing LERs, the testing of EMI/RFI root cause has frequently been unsuccessful. Many bench or field experiments attempting to reproduce source, path, and consequence in a root-cause determination have failed to demonstrate or reproduce the hypothesized root cause. The failed confirmation is inconclusive because the conditions of the test may not have reproduced the original event with sufficient accuracy. Because of this difficulty, an adequate justification in most LERs for attributing the event to EMI/RFI is the existence of a potential EMI/RFI source that is close in time and location to the affected component. In some cases, a specific EMI/RFI source is not identified at all; the evaluation stops with a statement such as, "The event may have been caused by a spurious voltage spike." The implication is that voltage spikes randomly occur with unknown causes and are not traceable to a particular source. Physically, this is not true. But, if a system is engineered without EMC design considerations, then the number of potential noise sources and paths exceeds any practical evaluation of the root cause. The indeterminacy of exact cause leads to modifications that fail to solve the problem. Instrumentation and control (I&C) engineers need easy-to-use EMI/RFI diagnostic tools to measure amplitude and waveforms of radiated and conducted EMI/RFI in the system. *The I&C engineers need electrical network-simulation software to analyze the propagation of a disturbance accurately and to assess the EMC requirements either in the context of a root-cause determination or in the system design or design modification stage.*

Observation 3. Guidance needs to be developed on resolving EMI/RFI problems. There are several ways of eliminating a signal line noise problem. An EMI/RFI problem involves a number of steps in the propagation from source to affected component. Methods of intervening can be introduced at each step. Generally, some precautionary measures can be taken to reduce the impact of EMI/RFI on I&C systems:

1. eliminate or reduce the amplitude of the source of the noise;
2. shield signal lines;
3. damp out the noise on the signal line with surge suppression or band pass filtering at the inputs to sensitive devices;
4. increase the tolerance to noise in the controlled devices; or
5. discriminate between a real signal and a false one by administratively blocking the actuation or alarm for a short time when a known EMI/RFI source is present (e.g., when welding nearby), logically blocking (e.g., 2 out of 3 logic) to prevent occurrence of false actuations, or discriminating based on the shape of the pulse or other dynamic characteristic to reject noise but not real signals.

A.2 Recommendations

In the course of reviewing EMI/RFI problems for signal lines, it became clear that additional information needs to be incorporated in the LER database. In addition, some reorganization of the database is needed to improve the search process and to make the retrieved data more informative in terms of easily recognizing the cause and effect of each occurrence. The following recommendations are designed to develop the information to support new regulatory guidance on EMC and risk-based licensing for signal line EMI/RFI.

1. **Quantify the risk parameters.** The first LER review sheet developed for this survey included parameters for gathering data on latency and unresolved EMI/RFI problems from the LER reports; however, these parameters were never available in the analysis. Without the risk data, no consideration of risk impact can be performed. The recommended research will evaluate the database to determine the frequency of events and latency times for undiscovered and unresolved EMI/RFI problems.

2. **Obtain quantitative data regarding spectra of signal noise, information signals, and the threshold at which adverse consequences occur.** The data for designing band pass envelopes emissions and susceptibility for EMC for signal lines need to be measured experimentally, particularly when false actuation problems have been detected. This review study looked for evidence that frequency spectra had been measured in diagnostic analysis of an event, but no data were reported. These data are essential for designing effective limits on emissions and susceptibility.

3. **Develop a laboratory experimental program based on the field measurements to characterize spectral envelopes for individual devices and safety channels for noise and signal spectra more completely.** Field measurements are obviously limited in the scope of data that can be obtained. This task is designed to fill in data that are needed for emissions and susceptibility guidelines in EMC that cannot be measured in the field.

4. **Provide data and analysis of the operating plant data and laboratory experimental data as input to the regulatory guidance documents for signal line EMC in the form of signal frequency response for the safety function and noise transmission/suppression.** Provide data and analysis of risk-based evaluations of EMI/RFI problems to optimize plant safety.

NRC FORM 335 (2-89) NRCM 1102, 3201, 3202

U.S. NUCLEAR REGULATORY COMMISSION

BIBLIOGRAPHIC DATA SHEET

(See instructions on the reverse)

1. REPORT NUMBER (Assigned by NRC, Add Vol., Supp., Rev., and Addendum Numbers, if any.)
NUREG/CR-5609
ORNL/TM-13705

2. TITLE AND SUBTITLE
Electromagnetic Compatibility Testing for Conducted Susceptibility Along Interconnecting Signal Lines

3. DATE REPORT PUBLISHED

MONTH	YEAR
07	2002

4. FIN OR GRANT NUMBER
JCN W6960

5. AUTHOR(S)
Paul D. Ewing, Richard T. Wood, Kofi Korsah, Ayman A. Shourbaji, Thomas L. Wilson, and Boyd M. Beets

6. TYPE OF REPORT
Technical

7. PERIOD COVERED *(Inclusive Dates)*

8. PERFORMING ORGANIZATION - NAME AND ADDRESS *(If NRC, provide Division, Office or Region, U.S. Nuclear Regulatory Commission, and mailing address; if contractor, provide name and mailing address.)*
Oak Ridge National Laboratory
P.O. Box 2008, MS-6006
Oak Ridge, TN 37831-6006

9. SPONSORING ORGANIZATION - NAME AND ADDRESS *(If NRC, type "Same as above"; if contractor, provide NRC Division, Office or Region, U.S. Nuclear Regulatory Commission, and mailing address.)*
Division of Engineering Technology
Office of Nuclear Regulatory Research
U.S. Nuclear Regulatory Commission
Washington, DC 20555-0001

10. SUPPLEMENTARY NOTES
Christina Antonescu, NRC Project Manager

11. ABSTRACT *(200 words or less)*

This document presents recommendations and the associated technical basis for addressing the effects of conducted electromagnetic interference (EMI) and radio-frequency interference (RFI) along interconnecting signal lines in safety-related instrumentation and control (I&C) systems. Oak Ridge National Laboratory has been engaged in assisting the U.S. Nuclear Regulatory Commission Office of Nuclear Regulatory Research in developing the technical basis for regulatory guidance on EMI/RFI immunity and power surge withstand capability (SWC). Previous research efforts have provided recommendations on (1) electromagnetic compatibility design and installation practices, (2) the endorsement of EMI/RFI and SWC test criteria and test methods, (3) the determination of ambient electromagnetic conditions at nuclear power plants, and (4) the development of recommended electromagnetic operating envelopes applicable to locations where safety-related I&C systems will be installed. The current research focuses on the susceptibility of I&C systems to conducted EMI/RFI along interconnecting signal lines. Coverage of signal line susceptibility was identified as an open issue in previous research on establishing the technical basis for EMI/RFI and SWC in safety-related I&C systems. Research results provided in this report will be used to establish the technical basis for endorsing U.S. Department of Defense and European Committee for Electrotechnical Standardization test criteria and test methods that address signal-line susceptibility. In addition, recommendations on operating envelopes are presented based on available technical information.

12. KEY WORDS/DESCRIPTORS *(List words or phrases that will assist researchers in locating the report.)*
electromagnetic compatibility (EMC)
electromagnetic interference (EMI)
electromagnetic receivers
instrumentation and controls (I&C)
nuclear power plant
radio-frequency interference (RFI)

13. AVAILABILITY STATEMENT
Unlimited

14. SECURITY CLASSIFICATION
(This Page)
Unclassified
(This Report)
Unclassified

15. NUMBER OF PAGES

16. PRICE

This form was electronically produced by Elite Federal Forms, Inc.

Printed on recycled paper

Federal Recycling Program

UNITED STATES
NUCLEAR REGULATORY COMMISSION
WASHINGTON, DC 20555-0001

OFFICIAL BUSINESS
PENALTY FOR PRIVATE USE, $300