Enclosure 2

Donald C. Cook Nuclear Plant Regulatory Conference

Essential Service Water

Debris Intrusion Event

July 25, 2002

AEP AMERICAN ELECTRIC POWER

Opening Remarks

Joe Pollock

Site Vice President

AEP AMERICAN ELECTRIC POWER

Agenda

■ Opening Remarks	Joe Pollock
■ Presentation Overview	Scot Greenlee
■ Event Overview	Gordon Arent
■ Significance Determination	Pam Cowan / Jack Giessner
■ Updated AEP Analysis	Pam Cowan / Jack Giessner
■ Summary	Scot Greenlee
■ Closing Remarks	Joe Pollock

AEP AMERICAN ELECTRIC POWER

Presentation Overview

Scot Greenlee

Director

Nuclear Technical Services

Presentation Overview

- Event Sequence and Corrective Actions
- New Information and Considerations for NRC Significance Determination
- Updated AEP Risk Case - Confirmed by Third Party Expert Reviews

Event Overview

Gordon Arent

Manager

Regulatory Affairs

AEP AMERICAN ELECTRIC POWER

Screenhouse Layout Diagram

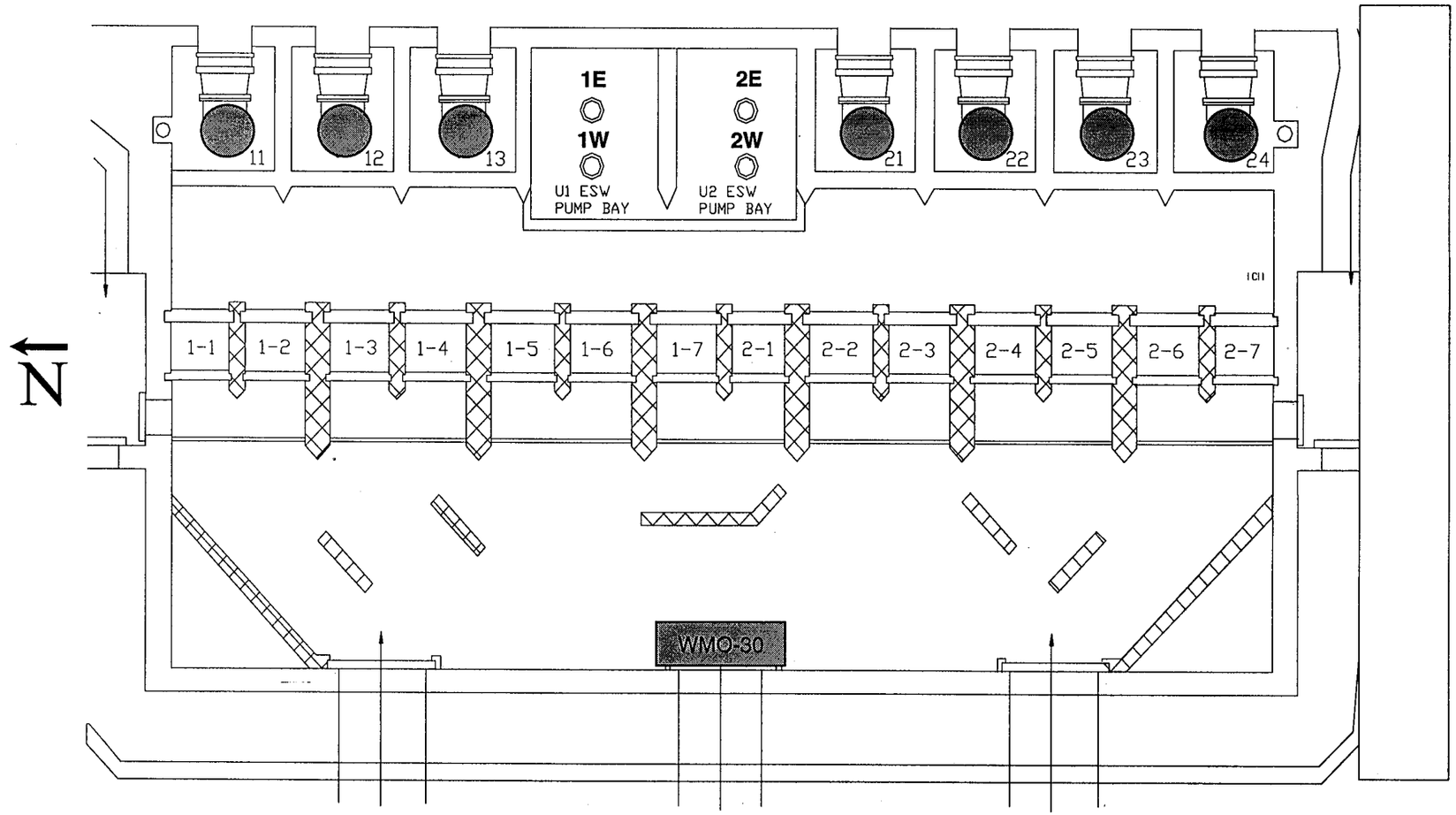

AEP AMERICAN ELECTRIC POWER

Essential Service Water Supply

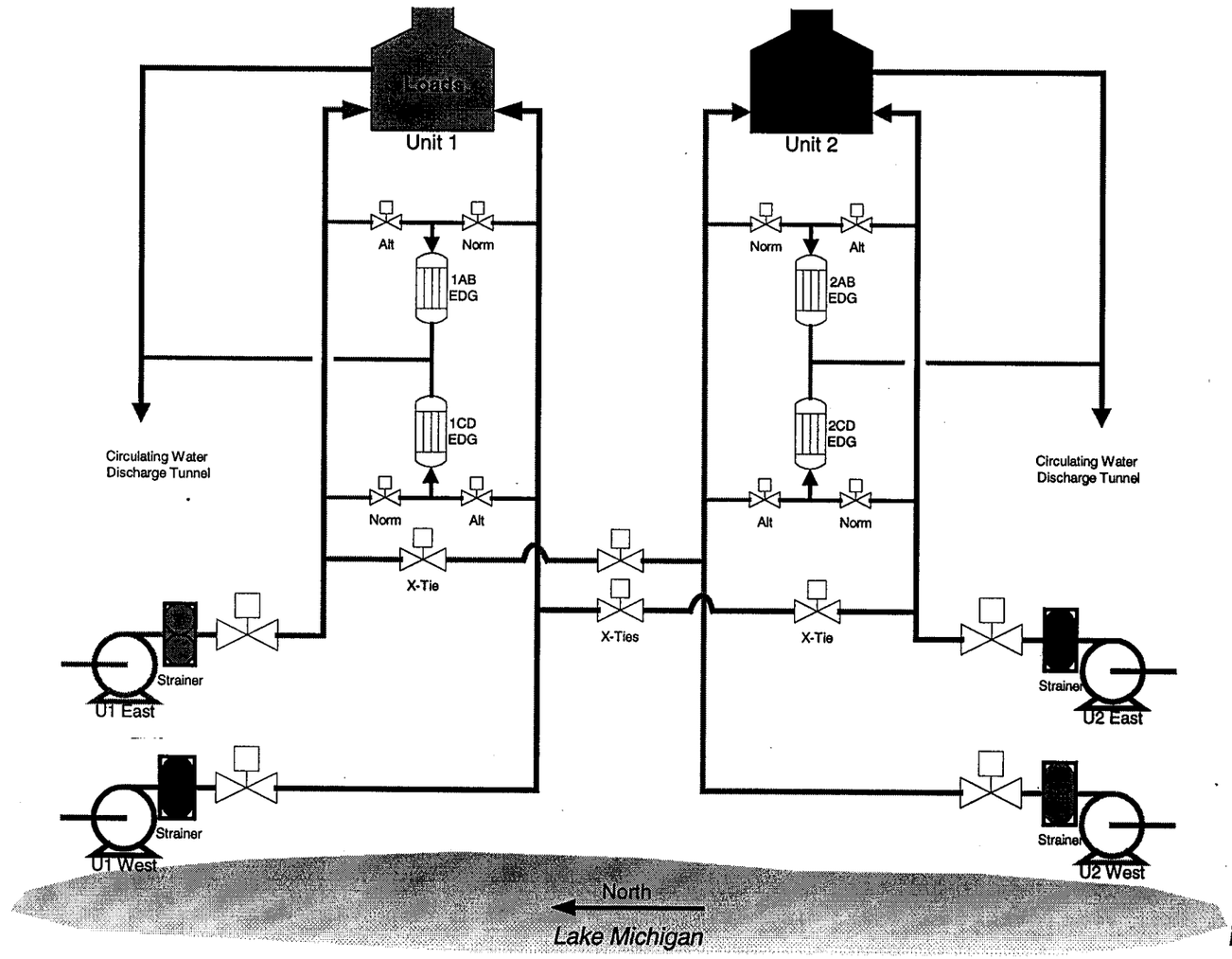

AMERICAN ELECTRIC POWER

Event Overview

- August 29, 2001
  - Unit 1 cooling down for forced outage maintenance
  - Unit 2 at 100% power
- Unit 1 Circulating Water (CW) System Removed From Service
  - Cross-flow patterns created
  - Forebay debris transported into essential service water (ESW) pump bay
- Damaged ESW Strainer Provides Bypass Pathway

Event Overview

- ESW Debris Intrusion Occurs
- Plant Alignment Transports Debris to Emergency Diesel Generator (EDG) Coolers
- Debris Causes Reduced ESW Flow
- Operators Detect Reduced ESW Flow
  - Declare EDGs inoperable and take action to restore flow
- EDGs Returned to Operable Status

Unit 2 Conservatively Removed From Service

AEP AMERICAN ELECTRIC POWER

Event Causal Factors

- **Root Cause**
  - Damaged ESW pump discharge strainer caused by weaknesses in maintenance practices and procedures
- **Contributing Causes**
  - Two CW pump discharge valves remained partially open
  - EDG coolers could be fed from either ESW train (original plant design basis)
  - Center intake isolation valve (WMO-30) approximately 5% open (increases debris availability)
  - Recent biocide treatment (increases debris availability)

Corrective Action Summary

- Inspected and Replaced ESW Strainer Baskets
- Revised ESW Strainer Maintenance Procedures
- Enhanced Monitoring of ESW System Performance
- Initiated CW Pump Discharge Valve Refurbishment
- Inspected, Cleaned, and/or Flushed Susceptible Heat Exchangers and Piping

Corrective Action Summary

- Verified Adequate ESW Flow to System Components
- Revised Operation of Alternate ESW Supply to the EDG Coolers
  - Alternate supply valves normal operating configuration closed
  - Design change eliminated automatic opening following an EDG automatic start

Corrective Actions Effective

AEP AMERICAN ELECTRIC POWER

Significance Determination

Pam Cowan
System Engineering Manager

Jack Giessner
Event Recovery Manager

AEP AMERICAN ELECTRIC POWER

Significance Determination — Introduction / Outline

- Background Information and Preliminary Finding Significance
- New Information and Considerations For Significance Determination
  - Discussion of information
  - PSA determination results
  - Conservatisms in approach

Significance Determination — Background

- Event Significance Based on Loss of Offsite Power (LOOP) With Possible Debris Intrusion and EDG Failure
- Dual and Single Unit LOOP Events Considered
- Single Unit LOOP Debris Transport Similar to August 29, 2001 Event
- Dual Unit LOOP Debris Transport Caused by Forebay Transient (Refill) When Circulating Water Pumps Trip
- Model Developed by AEP to Evaluate EDG Failure Probability Given a LOOP

Significance Determination — Background

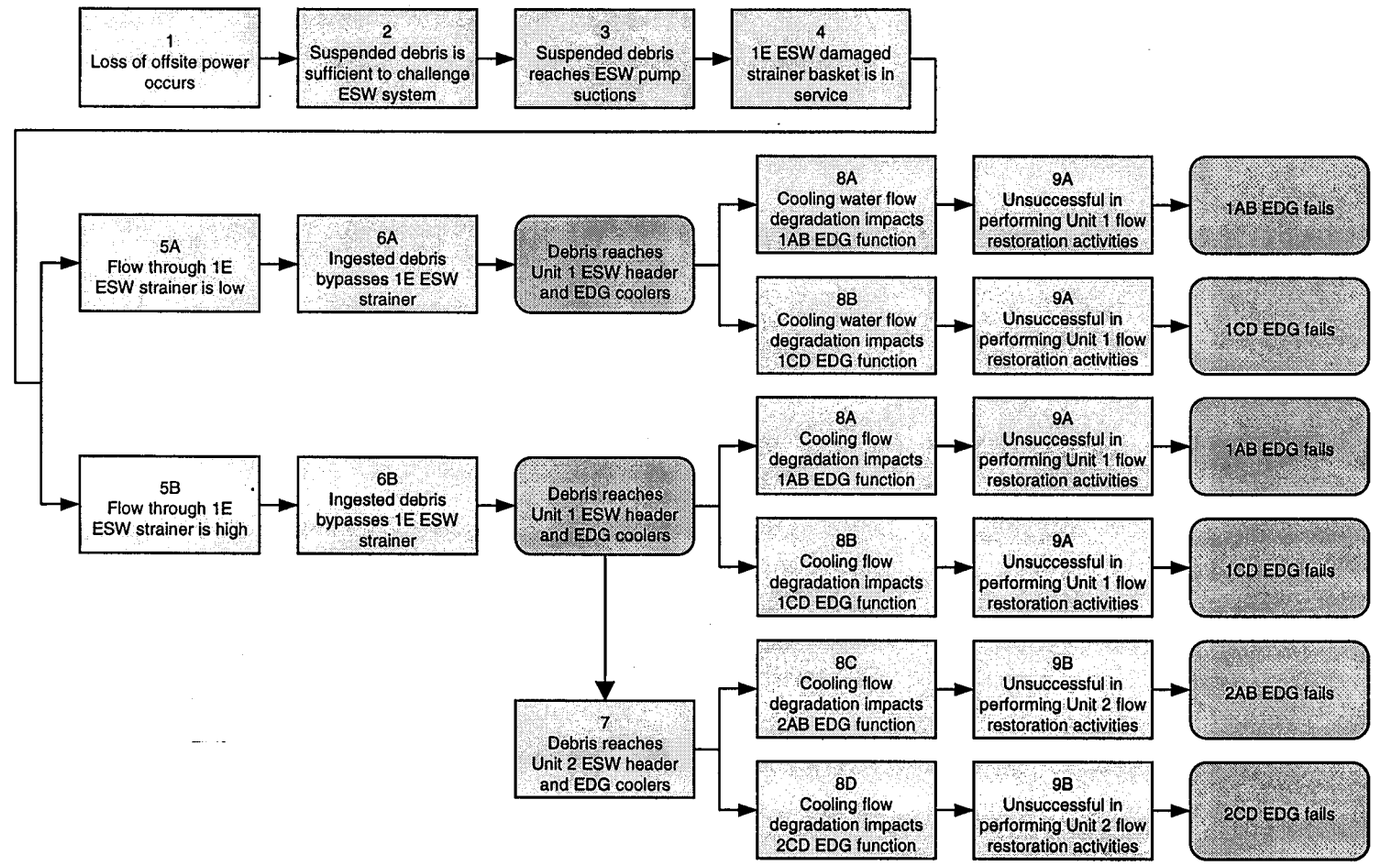

AEP AMERICAN ELECTRIC POWER

Significance Determination — Preliminary

■ NRC Review Identified Changes in Probability Factors Used by AEP

Event	AEP	NRC
Block 1: LOOP occurs	1	1
Block 2: Sufficient suspended debris is present	0.0189	0.5
Block 3: Suspended debris reaches ESW pump suctions	0.99	1
Block 4: 1E ESW damaged strainer basket is in service	0.7708	0.77
Block 5A: Flow through 1E ESW strainer is "low"	0.851	0
Block 5B: Flow through 1E ESW strainer is "high"	0.149	1
Block 6A: Ingested debris bypasses 1E ESW strainer	0.1	---
Block 6B: Ingested debris bypasses 1E ESW strainer	0.95	1
Condition: Bypassed debris enters Unit 1 EDG coolers	1	1
Block 7: Bypassed debris reaches Unit 2 EDG coolers	0.25	0.25
Block 8: Cooling flow degradation impacts EDG function	0.25	0.707 (Note 1)
Block 9: Condition is not identified/cleared by operators	0.13	0.36 (Note 2)

Note 1 – Block 8 value is a combined probability of 0.25 for failure of all four EDGs, which gives an individual EDG failure probability of $\sqrt[4]{0.25} = 0.707$

Note 2 – Block 9 value when applied on a per plant basis results in a probability of $\sqrt{0.13} = 0.36$

AEP AMERICAN ELECTRIC POWER

Significance Determination — Preliminary

- NRC Determined Dominant Risk Sequence to be Dual Unit LOOP Followed by the Failure of All EDGs
  - EDG common cause failure factor (CCFF) developed using revised probabilities from AEP model
  - CCFF used to obtain change in core damage frequency (Δ CDF) from SPAR model — 1.8E-05/year (Yellow)
  - Change in large early release frequency (Δ LERF) determined by using 0.4 conditional containment failure probability — 7.1E-06/year (Yellow)

New Information /Considerations

AEP AMERICAN ELECTRIC POWER

Significance Determination — New Information / Considerations

■ EDG Failure Probability Discussions Will Focus on Highlighted Areas

Event	AEP	NRC
Block 1: LOOP occurs	1	1
Block 2: Sufficient suspended debris is present	0.0189	0.5
Block 3: Suspended debris reaches ESW pump suctions	0.99	1
Block 4: 1E ESW damaged strainer basket is in service	0.7708	0.77
Block 5A: Flow through 1E ESW strainer is "low"	0.851	0
Block 5B: Flow through 1E ESW strainer is "high"	0.149	1
Block 6A: Ingested debris bypasses 1E ESW strainer	0.1	---
Block 6B: Ingested debris bypasses 1E ESW strainer	0.95	1
Condition: Bypassed debris enters Unit 1 EDG coolers	1	1
Block 7: Bypassed debris reaches Unit 2 EDG coolers	0.25	0.25
Block 8: Cooling flow degradation impacts EDG function	0.25	0.707 (Note 1)
Block 9: Condition is not identified/cleared by operators	0.13	0.36 (Note 2)

Note 1 – Block 8 value is a combined probability of 0.25 for failure of all four EDGs, which gives an individual EDG failure probability of $\sqrt[4]{0.25} = 0.707$

Note 2 – Block 9 value when applied on a per plant basis results in a probability of $\sqrt{0.13} = 0.36$

AEP AMERICAN ELECTRIC POWER

New Information — Block 2

- Additional Information Developed to Better Assess Probability Estimate
- Hydraulic Model Developed
- Model Benchmarked Against 1977 Screenhouse Forebay Level Response Test
- Upward Velocities May Exist up to 135 Seconds Following Trip of CW Pumps
- Screenhouse Water Level Maximized and Velocities Are Zero at 135 Seconds
- Forebay Level Oscillates Until Consistent With Lake

AEP AMERICAN ELECTRIC POWER

New Information — Block 2

- Hydraulic Model Used to Develop Vertical Velocity Data
- Maximum Upward Bulk Velocity 0.20 fps
- Maximum Oscillation Bulk Velocity 0.04 fps
- 3X Multiplier for Localized Velocities

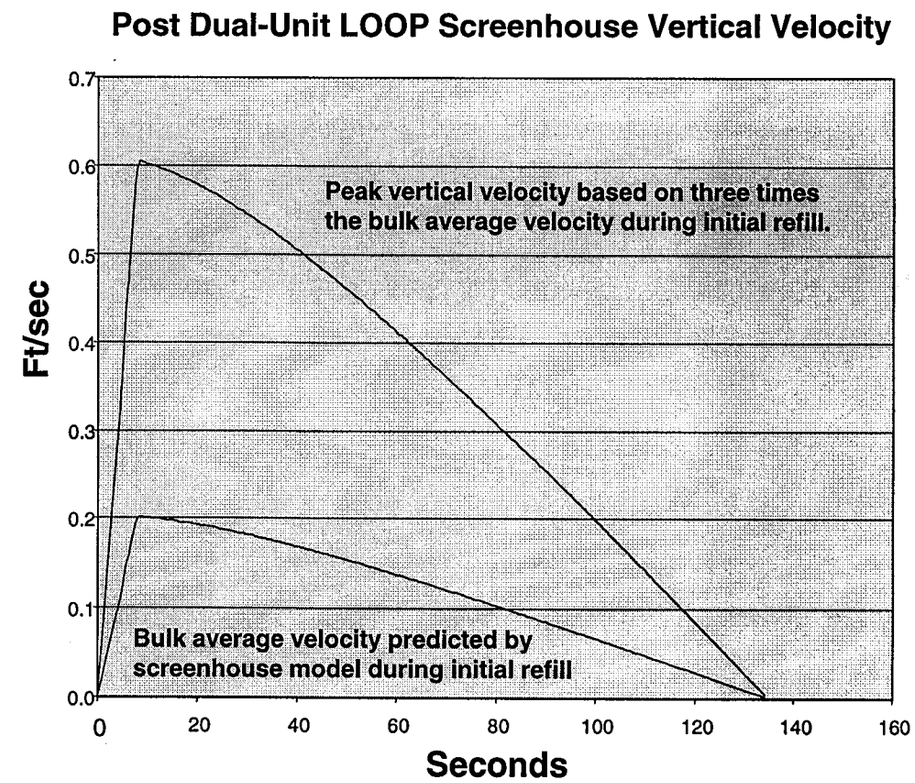

AEP AMERICAN ELECTRIC POWER

New Information — Block 2

Debris Lift Following Dual-Unit LOOP

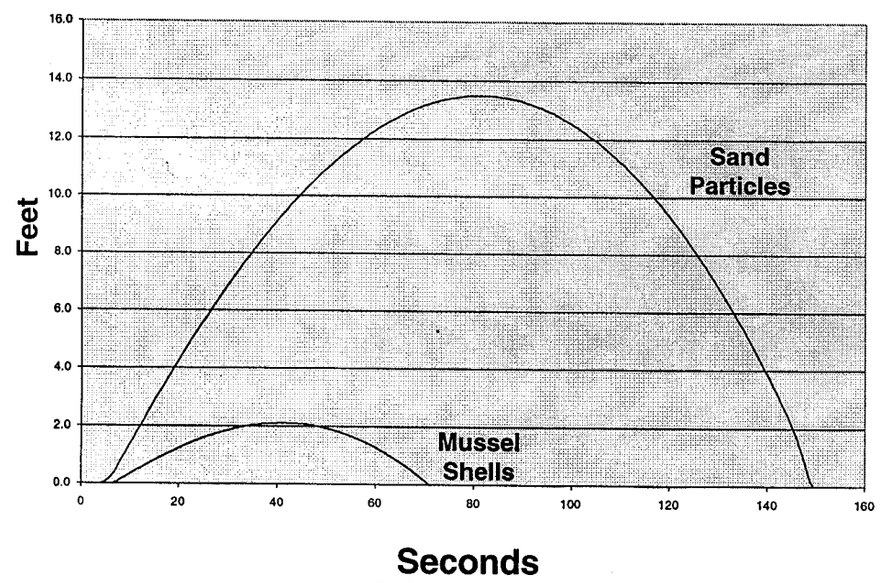

Assuming a sustained peak velocity of 3 times the bulk average velocity in the area of the ESW pumps.

- **Terminal Settling Velocities Recalculated**
  - 0.3 fps for sand
  - 0.5 fps for mussels
- **Calculations Correlated to Field Demonstration**
- **Debris Lift Determined From Water and Settling Velocities**

AEP AMERICAN ELECTRIC POWER

New Information — Block 2

- ESW pump vulnerability is about 40 seconds
  - Mussel shells rise approximately 2 feet and fall to the floor in approximately 70 seconds
  - ESW pumps sequence on EDGs at T_0+30 seconds
- Other Block 2 Sub-blocks Adjusted to Reflect Revised Subjective Probability Scale
- Overall Probability That Suspended Debris is Sufficient to Challenge ESW is 0.04

Screenhouse Refill Not a Credible Challenge to the Plant

AEP AMERICAN ELECTRIC POWER

New Information — Block 9

- Human Error Probability (HEP) Values Developed for Each Unit

- Unit Control Rooms Act Independently and Are Physically Separated

HEP Value Intended For Application on a Unit Basis

AEP AMERICAN ELECTRIC POWER

Significance Determination — New Information / Considerations

- **Additional Considerations**
  - **LERF**
    - » Approach consistent with RG 1.174
    - » AEP model used in prior docketed AEP correspondence to NRC
  - **AEP PSA Model**
    - » WinNUPRA widely used and accepted
    - » Peer certification process
    - » Supports maintenance rule decision-making
    - » Basis for previously docketed AEP correspondence to NRC

Significance Determination — New Information / Considerations

- PSA Results of Dual Unit LOOP With Station Black Out - Using New Information / Considerations

Δ CDF	3E-8 /year (Green)
Δ LERF	7E-9 /year (Green)

Significance Determination — New Information / Considerations

- **Conservative Assumptions in This Approach:**
  - The following blocks were not modified, but AEP analysis shows conservatism
    - » Block 5A: Flow through 1E ESW strainer is "low"
    - » Block 5B: Flow through 1E ESW strainer is "high"
    - » Block 6A: Ingested debris bypasses 1E ESW strainer
    - » Block 8: Cooling flow degradation impacts EDG function
  - Technical specification required charging system cross-tie not modeled
  - Technical specification required 69 KV offsite power source not credited

Updated AEP Evaluation

Pam Cowan
System Engineering Manager

Jack Giessner
Event Recovery Manager

AEP AMERICAN ELECTRIC POWER

Updated AEP Evaluation

- **Original Probabilistic Study Developed April 2002**
  - Used as input to NRC evaluations
  - Revised July 2002 based on new information and expert reviews
- **EDG Failure Probability Inputs Revised (Highlighted)**

Event	Original	Revised
Block 1: LOOP occurs	1	1
Block 2: Sufficient suspended debris is present	0.0189	0.04
Block 3: Suspended debris reaches ESW pump suctions	0.99	0.99
Block 4: 1E ESW damaged strainer basket is in service	0.7708	0.7708
Block 5A: Flow through 1E ESW strainer is "low"	0.851	0.85
Block 5B: Flow through 1E ESW strainer is "high"	0.149	0.15
Block 6A: Ingested debris bypasses 1E ESW strainer	0.1	0.3
Block 6B: Ingested debris bypasses 1E ESW strainer	0.95	1
Condition: Bypassed debris enters Unit 1 EDG coolers	1	1
Block 7: Bypassed debris reaches Unit 2 EDG coolers	0.25	0.25
Block 8: Cooling flow degradation impacts EDG function	0.25	0.5
Block 9: Condition is not identified/cleared by operators	0.13	0.13

AEP AMERICAN ELECTRIC POWER

Updated AEP Evaluation

- **Single Unit LOOP Scenarios Eliminated**
  - Additional time (hours) to develop contingency strategies
  - Ability to cross-connect charging from other Unit
  - Use of 69 KV offsite power
    - » physically separated from main switchyard

- **Most Limiting Δ LERF Value Used:**
  - .2 conditional containment failure probability factor, or
  - AEP model

Updated AEP Evaluation

- **Results of Updated AEP Evaluation:**

	Unit 1	Unit 2
Δ CDF	6.1E-7 (Green)	4E-8 (Green)
Δ LERF	1.2E-7 (White)	9E-9 (Green)

Updated AEP Evaluation

- Conservatisms
  - Technical specification required charging system cross tie not credited
  - Technical specification required 69 KV offsite power source not considered
  - Most limiting Δ LERF value used:
    - » .2 conditional containment failure probability factor, or
    - » AEP model

AEP AMERICAN ELECTRIC POWER

Summary

Scot Greenlee

Director

Nuclear Technical Services

AEP AMERICAN ELECTRIC POWER

Summary

- Third Party Reviews Show Results Are Sound
- Modified Approaches Produced Similar Results
- Conservatism (Over-Estimation of Risk) Exists in Either Approach

Considering Conservatisms
AEP Overall Event Risk Significance
Conclusion is "GREEN"

AEP AMERICAN ELECTRIC POWER

Closing Remarks

Joe Pollock

Site Vice President