THOSE PORTIONS OF THIS DRAWING WHICH ARE COLORED CYAN INDICATE THAT THE COLORED ITEM IS SUBJECT TO AGING MANAGEMENT REVIEW

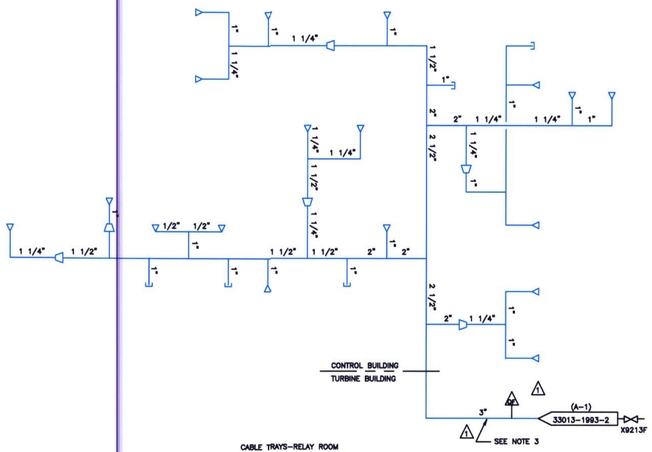

S09
RELAY ROOM SOUTH EAST
DELUGE FIRE PROTECTION SYSTEM

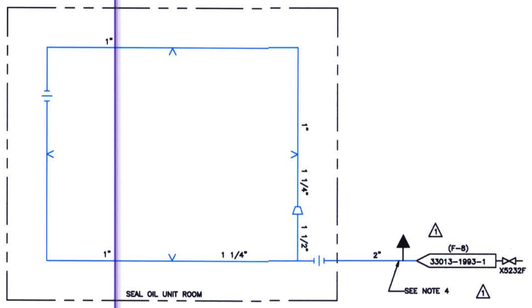

S25
SEAL OIL UNIT
DELUGE FIRE PROTECTION SYSTEM

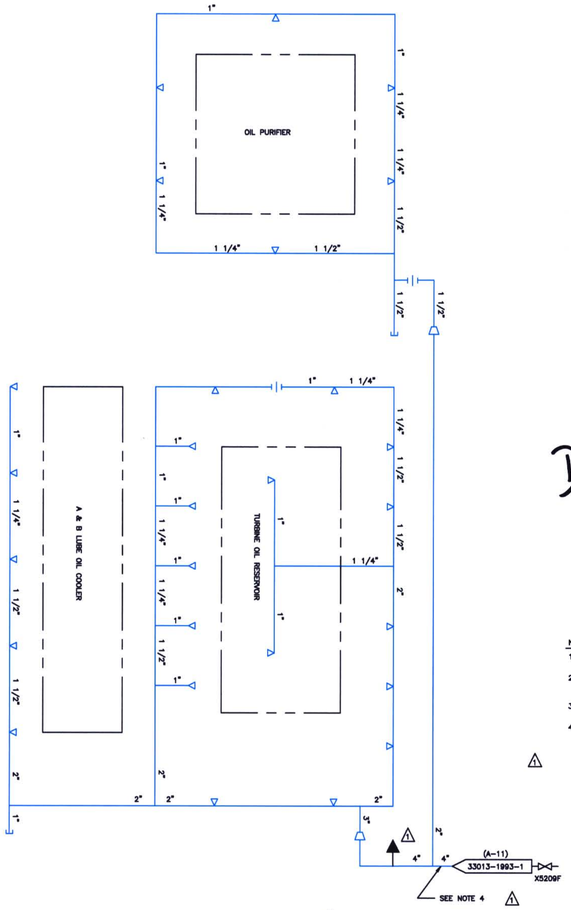

S27
TURBINE OIL RESERVOIR
DELUGE FIRE PROTECTION SYSTEM

D-88

NOTES:

1. FOR GENERAL NOTES SEE DRAWING 33013-2241.
2. ALL PIPING REDUCES TO 3/4" AT SPRINKLER HEADS UNLESS OTHERWISE NOTED.
3. SPRINKLER PIPING FROM VALVE 9213F IS LINE SPEC 125-14.
4. SPRINKLER PIPING FROM VALVES 5209F AND 5232F IS LINE SPEC. 125-11

08:00-05/04/93

	REVISED PER DCR 93-0118	AJG 3/23/93	TCG 4/13/93	CFD 5/3/93	TEM 5/4/93	
CHANGE	REASON	CHK'D BY	CHK'D BY	CHK'D BY	CHK'D BY	ENGRG.

CAD FILE NAME: 33013-2358

	CONSTRUCTION	
	LIMITED CONSTRUCTION AS NOTED	
	PRELIMINARY NOT FOR CONSTRUCTION	
	BIDDING PURPOSES	
	AS BUILT	
DATE	RELEASED FOR	ENGRG.

DRAWN: GINNA STA. ROCHESTER GAS & ELECTRIC CORP. GINNA STATION

SCALE: NONE

SPRINKLER SYSTEM AT DELUGE VALVES 5209F, 5232F AND 9213F

P & ID

JOB NO.	DRAWING NO.	REV.
EWR 3391E	33013-2358-LR	

CCD 01 CONTROL COPY #