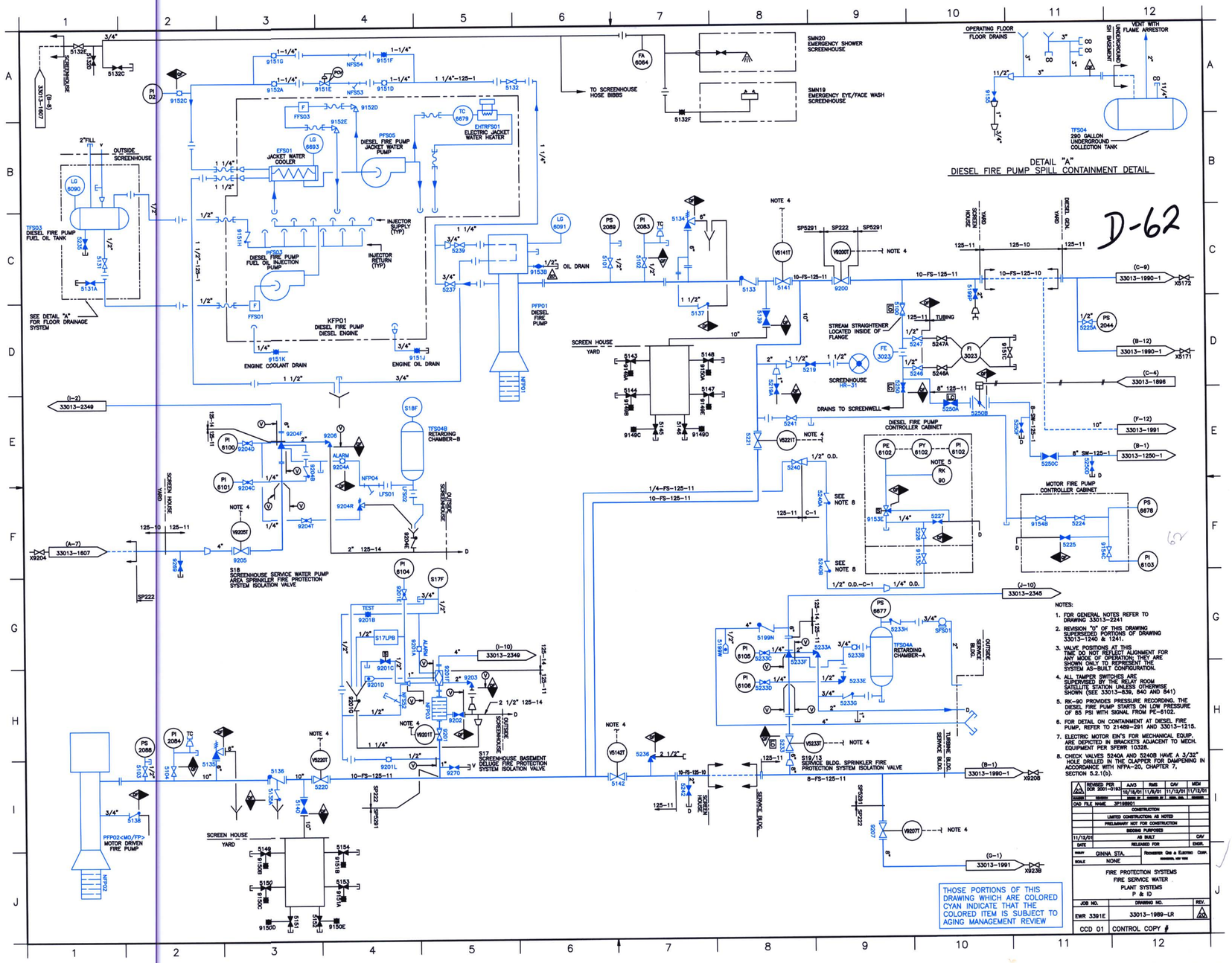

NOTES:

1. FOR GENERAL NOTES REFER TO DRAWING 33013-2241
2. REVISION "0" OF THIS DRAWING SUPERSEDED PORTIONS OF DRAWING 33013-1240 & 1241.
3. VALVE POSITIONS AT THIS TIME DO NOT REFLECT ALIGNMENT FOR ANY MODE OF OPERATION; THEY ARE SHOWN ONLY TO REPRESENT THE SYSTEM AS-BUILT CONFIGURATION.
4. ALL TAMPER SWITCHES ARE SUPERVISED BY THE RELAY ROOM SATELLITE STATION UNLESS OTHERWISE SHOWN (SEE 33013-839, 840 AND 841)
5. RK-90 PROVIDES PRESSURE RECORDING. THE DIESEL FIRE PUMP STARTS ON LOW PRESSURE OF 85 PSI WITH SIGNAL FROM PE-6102.
6. FOR DETAIL ON CONTAINMENT AT DIESEL FIRE PUMP, REFER TO 21489-291 AND 33013-1215.
7. ELECTRIC MOTOR EIN'S FOR MECHANICAL EQUIP. ARE DEPICTED IN BRACKETS ADJACENT TO MECH. EQUIPMENT PER SFEWR 10328.
8. CHECK VALVES 5240A AND 5240B HAVE A 3/32" HOLE DRILLED IN THE CLAPPER FOR DAMPENING IN ACCORDANCE WITH NFPA-20, CHAPTER 7, SECTION 5.2.1(b).

THOSE PORTIONS OF THIS DRAWING WHICH ARE COLORED CYAN INDICATE THAT THE COLORED ITEM IS SUBJECT TO AGING MANAGEMENT REVIEW

2	REVISED PER DCR 2001-0193	AJG 10/16/01	RMS 11/8/01	CAV 11/12/01	MEM 11/12/01
CHECKED	DESIGNED	DRAWN BY	CHECKED BY	CHECK. MGR.	ENGINEER

CAD FILE NAME: 3P198001

CONSTRUCTION
LIMITED CONSTRUCTION AS NOTED
PRELIMINARY NOT FOR CONSTRUCTION
BIDDING PURPOSES
11/12/01 AS BUILT CAV
DATE RELEASED FOR ENGR.

DRAWN: GINNA STA. — ROCHESTER GAS & ELECTRIC CORP. ROCHESTER, NEW YORK
SCALE: NONE

FIRE PROTECTION SYSTEMS
FIRE SERVICE WATER
PLANT SYSTEMS
P & ID

JOB NO.	DRAWING NO.	REV.
EWR 3391E	33013-1989-LR	2

CCD 01 CONTROL COPY #