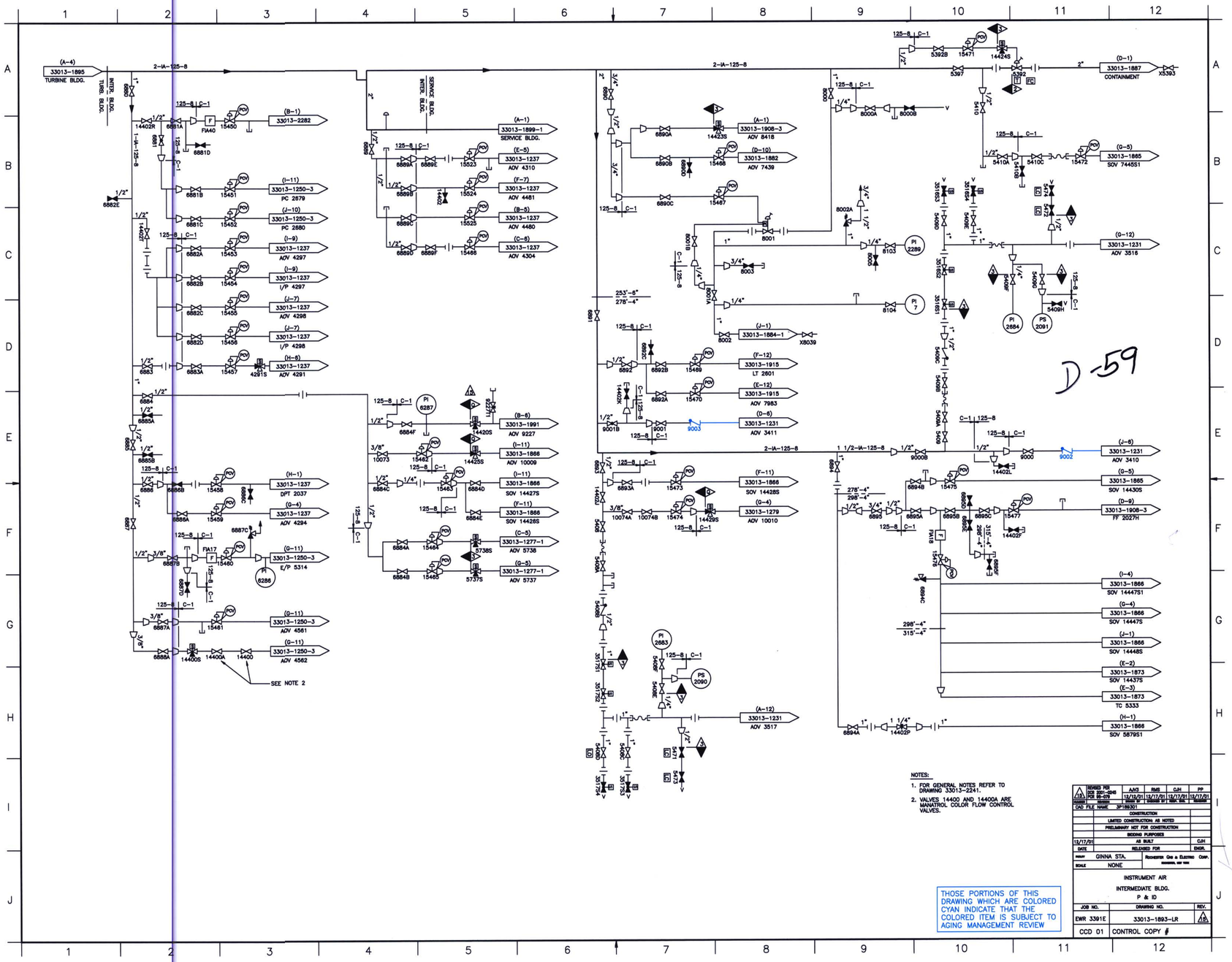

NOTES:

1. FOR GENERAL NOTES REFER TO DRAWING 33013-2241.
2. VALVES 14400 AND 14400A ARE MANATROL COLOR FLOW CONTROL VALVES.

THOSE PORTIONS OF THIS DRAWING WHICH ARE COLORED CYAN INDICATE THAT THE COLORED ITEM IS SUBJECT TO AGING MANAGEMENT REVIEW

13	REVISED PER DCR 2001-0246 PER 96-079	AJV3	RMS	CJH	PP
		12/13/01	12/17/01	12/17/01	12/17/01
CHANGE	REVISION	DRAWN	CHECKED	REV. DATE	ENGINEER

CAD FILE NAME 3P189301

CONSTRUCTION	
LIMITED CONSTRUCTION AS NOTED	
PRELIMINARY NOT FOR CONSTRUCTION	
DESIGNS PURPOSES	
AS BUILT	CJH
RELEASED FOR	ENGR.

PROJECT GINNA STA. — ROCHESTER GAS & ELECTRIC CORP. ROCHESTER, NEW YORK

SCALE NONE

INSTRUMENT AIR
INTERMEDIATE BLDG.
P & ID

JOB NO.	DRAWING NO.	REV.
EWR 3391E	33013-1893-LR	13

CCD 01 CONTROL COPY #